ECG212J
Suggested Price $2.95

Sylvania ECG® Semiconductors

Master Replacement Guide

- Entertainment
- Industrial
- Commercial

Sylvania ECG Semiconductors Master Replacement Guide

The Most Comprehensive Guide in Industry

Contents

	Page
Replacement Procedures	1
Selecting a Transistor for an Unlisted Type	3
Testing Solid-State Devices	4
INDEX/PRODUCT LIST	7
Transistors	19
Bi-Polar Types	19
Complementary Pairs	25
RF Transistor Selector Guide	25
Amateur 13-30 MHz	25
Low Band FM 27-50 MHz	25
VHF Marine FM 156-162 MHz	25
High Band VHF FM 136-174 MHz	26
VHF AM 108-175 MHz	26
UHF FM 407-512 MHz	26
Field-Effect Transistors (FET)	27
Darlington Power Transistors	28
Diodes and Rectifiers	33
Varistors (Temperature Compensating Diodes)	34
Varistors (Voltage Compensating Diodes)	34
Varactors (Variable Capacitance Diodes)	34
Bridge Rectifiers (Silicon)	34
HV Rectifiers (Silicon)	34
HV Rectifiers (Selenium)	35
Solid-State Replacements for TV HV Rectifiers	35
HV Multipliers	37
HV Dividers/Focus Assemblies	39
Microwave Oven Rectifiers	40
Industrial Rectifiers	41
Zener Diodes	42
Silicon Controlled Rectifiers (SCR)	43
TRIACS	45
Integrated Thyristors and Rectifiers	47
Special Purpose Devices	47
Silicon Unijunction Transistors (UJT)	47
Programmable Unijunction Transistor (PUT)	47
Silicon Bilateral Switch (SBS)	47
Silicon Unilateral Switch (SUS)	47
Silicon Asymmetrical Switch (SAS)	47
Silicon Controlled Switch (SCS)	48
Bilateral Trigger Diodes (DIAC)	48
Metal Oxide Varistor (MOV)	48
Quartz Color Oscillator Crystals	48
Opto-Electronic Devices	49
Discrete LED Indicators	49
Infrared Emitting Diodes	51
Phototransistor Detector	51
Optoisolators	53
LED Displays	54
Linear Integrated Circuits and Modules	56
IC and Module Selector Guide	56
IC and Module Circuits	58
Digital Integrated Circuits	120
CMOS	120
TTL (Including 74C CMOS Series)	130
DTL	145
HTL	149
RTL	153
Interface (Display Driver) Integrated Circuits	156
Miscellaneous Integrated Circuits	159
Accessories	160
REPLACEMENT DIRECTORY	163
Special Notes	Inside Back Cover

Introduction

The Sylvania ECG semiconductor product line is designed to minimize replacement parts inventory for the electronic technician and yet economically meet replacement needs of the wide variety of equipment which he encounters. Selective additions are made to the ECG line from time to time to keep abreast of the many new types as they find their way into the field.

This master replacement guide provides replacement considerations and specifications for ECG products as well as a replacement directory which cross references JEDEC and manufacturers' part numbers to the Sylvania ECG types which will replace them. Periodic supplements are published to reflect the many new semiconductor devices constantly being placed into service by equipment manufacturers.

The technical data given on the following pages are intended to show safe areas of ECG device operation and level of performance. They are not to be considered limits for new equipment designs. GTE Sylvania Incorporated cannot guarantee that the listed items provide an exact replacement in all applications.

© Copyright April 1979
by
GTE Sylvania Incorporated

The information contained herein is believed to be accurate. However, no responsibility is assumed by GTE Sylvania Incorporated for its use nor for any infringements of patents or other rights of third parties which may result from its use. Reproduction, without express permission, of editorial or pictorial content in any manner is prohibited.

ECG® Semiconductors for
Entertainment, Industrial and Commercial Equipment

Replacement Procedures

When replacing the original device with an ECG unit, certain mechanical and electrical requirements must be observed. Compare the lead or terminal arrangement of the original part with the ECG replacement. If necessary, bend the leads to the proper basing arrangement and insulate them to prevent possible shorts. For socketed devices, cut the leads on the replacement to proper length. Check the outline dimensions of the replacement if mounting space is a problem. Replacement in untuned stages can generally be made with a minimum of effort.

In case of tuned amplifiers, oscillators, etc., a check of the stage alignment may be in order after replacement to assure optimum performance. UHF, VHF, and FM circuits are especially critical.

Replacement in high-power audio stages should always be accompanied by a check on the transistor bias to prevent excessive dissipation and/or distortion. The equipment manufacturer's recommended procedure should be followed.

In the case of power devices requiring the use of an insulating washer, apply ECG424 silicone grease to both sides of the washer to insure maximum thermal efficiency.

To extend transistor life in high-power dissipation applications where a large thermal interface is not provided by the original equipment, the use of a heat sink is recommended when space permits. The ECG line includes a variety of transistor heat sinks, insulator kits, and heat sink compound for this purpose.

Solid-state circuitry is generally miniaturized and is most often fabricated on a printed-circuit board. Any repairs to this type of circuitry require a well-tinned, pencil-type soldering iron. Care must be taken in soldering, both to prevent damage to the printed circuit board and to make sure that the solid-state device itself is not over-heated. A good quality 60/40 (60% tin, 40% lead) solder helps to make joints quickly with a minimum of heat. When solid-state devices must be removed or installed, some means must be provided to conduct heat away from their junctions. Long-nose pliers may be used as a heat sink.

Leakage between the heating element and the soldering-iron tip can cause the tip to be above ground potential. This leakage voltage may cause transistor damage if the chassis has a return to ground. To be on the safe side when soldering or unsoldering solid-state devices (especially non-gate protected MOSFET's), it is recommended that a flexible grounding strap be connected from the metal neck of the soldering iron to a good ground.

The same considerations about line leakage also apply to the use of oscilloscopes and signal generators. Even though the equipment may have a power transformer, the "line-filter" capacitors which are usually connected between the transformer primary and chassis ground permit an ac flow between chassis ground and earth ground. Therefore, if you connect the ground lead of such test equipment to a sensitive point in transistorized equipment having an earth ground, damage may result.

Use of ECG Silicon Plastic Power Semiconductors

Plastic power semiconductors have been more and more commonly finding their way into electronic equipment; the large variety of styles, shapes, sizes, and electrical characteristics employed often pose a problem in finding a suitable replacement. ECG semiconductors go a long way to ease this problem by offering a limited number of carefully selected types which provide replacement coverage in the majority of cases.

In general, it is recommended that transistors in push-pull, parallel, complementary symmetry, and "quasi-complementary" symmetry circuits be replaced in pairs. Following this practice simplifies balancing of the circuit as well as improving performance and reliability of the job. NPN/PNP types suitable for replacing in complementary pairs are listed after the transistor data charts.

Forming Pins

1. To avoid pulling when bending a plastic device pin, always restrain the pin firmly by holding with a pair of needle-nosed pliers or tweezers located at least 1/8-inch away from the device body. Internal connections of the pins to their junctions may be disrupted if this procedure is not observed.
2. If pins must be spread apart, bend the pin only in the narrow portion of its length, again restraining the pin during bending as per Step 1.
3. Maintain a bend radius of at least 1/16 inch.
4. Do not repeatedly bend pins. Insulate pins if necessary to avoid short circuits.
5. Mount the device before soldering to leads.

Mounting

1. Use the proper mounting hardware, such as insulating bushings, insulating washers, etc., called for by the specific application.
2. To promote efficient heat transfer, insulating washers, when required, should be thin (typically three mils for a mica washer). Use a thin, even layer of ECG424 silicone grease on both sides of the washer.
3. Exercise care that the tool used to tighten the transistor retaining nut or bolt does not contact the device body.

4. Do not exceed six inch-pounds torque (an average male can exert about 50-inch pounds torque with a screwdriver).
5. Avoid exerting pull on the device pins while connecting them to their circuit connections. Provide a means of strain relief if these connections tend to place pulling forces on the pins.

After soldering the connections using good solid-state practice, complete the replacement job with a check of the bias, following the procedures provided by the equipment manufacturer.

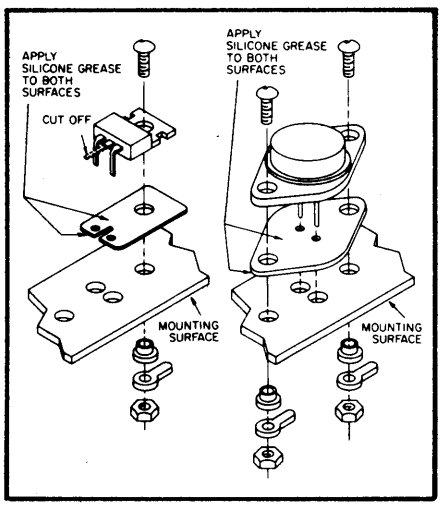

MOSFET Handling Precautions

In handling non-gate protected MOSFETS, such as the ECG220 and ECG221, the following precautions should be observed:

Prior to assembly into a circuit, all leads should be kept shorted together with the metal spring.
When devices are handled, the hand being used should be at ground potential.
Tips of soldering irons should be grounded.
Devices should never be inserted into or removed from circuit with power on.

Gate-protected devices, such as the ECG222, incorporate special back-to-back diodes that are diffused directly into the M.O.S. pellet and are electrically connected between each insulated gate and the FET's source. These diodes effectively bypass any voltage transients which exceed approximately ±10 volts and protect the gates against damage in all normal handling and usage.

CMOS Handling Precautions

The input protection networks incorporated in all Sylvania CMOS devices are effective in a wide variety of device handling situations. To be totally safe, however, it is desirable to restate the general conditions for eliminating all possibilities of device damage.

CMOS devices may be damaged if exposed to high static charges. The handling procedure shown below should be followed in order to assure against damaging the devices:

1. The leads of the devices should be shorted out with some type of conductive material except when being tested or when actually in the circuit. This will prevent build up of static charges.
2. All tools, jigs and fixtures, soldering-irons and any type of handling device should be grounded.
3. Transient voltages can damage CMOS too. Therefore, units should not be plugged into, nor removed from, circuits while power is still on. Signals should not be applied if the power to the device is off.
4. If a lead is not used, it must be either grounded or connected to the device power supply. Which one will depend on the logic circuit involved.

Table I indicates general handling procedures recommended to prevent damage from static electrical charges.

Total protection results when personnel and materials are all at the same or ground potential.

Table I

	Should be conductive	Should be grounded to common point
Handling Equipment	X	
Metal Parts of Fixtures and Tools		X
Handling Trays	X	X
Soldering Irons		X
Table Tops	X	X
Transport Carts		(Static Discharge Straps)
Manufacturing Operating Personnel		*(Utilize grounded metal wrist straps)
General Handling of Devices		*(Utilize grounded metal wrist straps)

*1-megohm series resistor

Dry weather (relative humidity less than 30%) tends to multiply the accumulation of static charges on any surface. Conversely, higher humidity levels tend to reduce the magnitude of the static voltage generated. In a low-humidity environment, the handling precautions listed above take on added importance and should be adhered to without exceptions.

Selecting a Transistor for an Unlisted Type

If the specific type number to be replaced is not listed in the cross reference section of this guide, try the following suggestions to determine an appropriate replacement.

First, determine whether the transistor is an NPN or PNP. Refer to the schematic diagram if there is one available. If the arrow on the emitter of the transistor symbol is pointing away from the base, it is NPN. If it is pointing toward the base it is PNP. If you do not have a diagram you must determine the polarity of the voltage between the collector and emitter terminals. If the collector voltage is positive with respect to the emitter, the device is NPN. If the collector voltage is negative with respect to the emitter, the device is PNP. You may also use the ohmmeter method as described in the following section.

The next step is to determine whether the transistor is a germanium or silicon. Observe voltages noted on the schematic. If the voltage difference between the base and emitter is approximately 0.2 volts, it would be a safe assumption that it is germanium. Should the voltage be approximately 0.6 volts, it is probably a silicon device. These readings may vary slightly either way because different bias currents produce different voltage drops across the base-emitter junction. If a schematic isn't available, you may be able to read these voltages in the circuit being tested, provided the device does not have a base-emitter short or is not open. If you can read this voltage on the suspected device, look for another device like it in another part of the circuit and measure its voltages.

Germanium transistors are usually identifiable by their complex biasing arrangement. This is necessary because of characteristic temperature drift and high leakage currents. Also, there will be a resistor in the emitter circuit in nearly every germanium application. Silicon transistors are much more temperature stable and have very low leakage. Therefore, the need for complex external circuitry is greatly reduced.

After determining the polarity and type of material in the device, it is necessary to determine the frequency range of the circuit it is used in. This can be done simply by identifying its application such as DC, AF, HF, VHF, or UHF, etc. Be sure you select a high enough frequency device for the application.

The breakdown voltage (BVCEO, BVCBO) can be determined by referring to a schematic diagram or by measuring the voltage between collector and emitter. It is probably best to go by the maximum power supply voltage of the particular circuit. Select a transistor for a breakdown voltage at least slightly higher than measured. Actually, the higher the breakdown voltage rating, the greater the margin of safety.

The collector current (I_C) can be determined by assuming a steady state DC condition. To do this, determine the resistance which is in series with the collector and emitter from the diagram or by measuring the resistor in the collector circuit and emitter circuit and adding the two together. This resistance limits the amount of current which can flow through the transistor's collector and emitter with a given power supply voltage. Neglect any internal resistance which may be present between the collector and emitter and calculate the current using Ohm's Law ($I = \frac{E}{R}$). This can be considered a worst case condition. If the device is operating at RF frequencies, the impedance due to inductance and capacitance may cause only a fraction of the DC current to flow.

Gain (HFE) should also be considered in the selection of a replacement device. This is determined primarily by its application in a circuit. Some typical gain categories are:

RF, Mixers, IF and AF	80 - 150
RF and AF Drivers	25 - 80
RF and AF Output	4 - 40
High Gain Preamps and Sync Separators	150 - 500

Case type and size need only be considered where an exact mechanical fit is required. Otherwise, if you can fit the device into place even though it is not the exact case, it will probably do the job as well as the original. Some high frequency circuits may require exact replacements but even these circuits will require some alignment touch-up, especially in the case of UHF circuits.

Lead configuration generally is not a prime consideration for replacement transistors although it may be desirable for ease of insertion and appearance.

Personalized Service for Unlisted Types

Upon the user's request, the ECG Semiconductor Field Engineering Department will try to cross reference any type number or part number not in this ECG Semiconductor Replacement Guide. Sometimes this is possible, sometimes not. However, the chance of success is greatly increased as the amount of information to work with goes up. Therefore, when requesting a new cross reference, please give as much of the information requested in Table II as possible.

Table II

1) Type No.
2) Part No.
3) No. on Unit
4) Type of Device (i.e., Diode, Rectifier, PNP or NPN Transistor - Silicon or Germanium, SCR, Triac, etc.)
5) If IC, Specify Digital, Linear, or Other Description
6) Application of Device (i.e., TV, CB, Scanner, Auto Radio, Tape Recorder, Tape Deck, Stereo, FM, or Other Description)
7) Manufacturer's Name
8) Trade Name
9) Chassis No.
10) Model No.
11) Description of Device Function

Inquiries for such cross reference information should be sent to:

ECG Semiconductor Field Engineering
GTE Sylvania Incorporated
1025 Westminster Drive
Williamsport, Pennsylvania
17701

Testing Solid-State Devices

Precautions

Ohmmeters - Ohmmeters must be used with great care in transistor circuits. It must be remembered that the ohmmeter has an internal voltage source. Also, some instruments are capable of delivering high currents.

Meter test probes with sharp points facilitate checks on printed-circuit boards. They minimize the danger of accidentally bridging adjacent conductors. Also, the needle points easily pierce resin, varnish, or surface corrosion on the conductors. False readings are often the result of not making good connections on the printed-circuit board.

In-circuit measurements are often misleading because of the shunt paths provided by transistor junctions that become forward biased by the ohmmeter's supply. An example is shown in Fig. A. With the ohmmeter connected in this fashion, the internal battery places a forward bias on the emitter junction of the transistor. This effectively places R_E in shunt with R2.

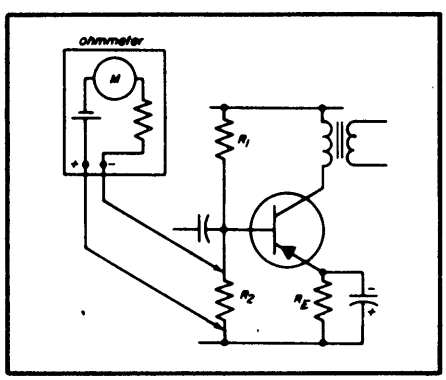

Fig. A - False resistance reading caused by forward-biased emitter junction.

In addition to shunt paths provided by transistor junctions, the physically small electrolytic capacitors employed as coupling and bypass capacitors also provide low-resistance shunt paths if the ohmmeter's internal supply should polarize them incorrectly. These components can be permanently damaged by even a low voltage of incorrect polarity. Damage can also be caused if the polarity is correct, but the working voltage of the capacitor is exceeded by the ohmmeter's supply. Some capacitors are rated at only 3 volts, while the internal supply of many ohmmeters is 7.5 volts and may run as high as 30 volts. (Most electronic VOM's employ a 1.5-volt supply and are therefore always safe as far as voltage breakdown is concerned.)

As a general rule, ohmmeter measurements in the transistor circuit should be made by disconnecting one lead of the component to be checked. This removes any possibility of a shunt path. However, the reading in Fig. A. could be made if the ohmmeter leads are reversed, in which case the emitter junction becomes reverse biased. This requires a knowledge of the polarity of the ohmmeter voltage at the meter's test leads.

Ohmmeter connections that reverse-bias transistor junctions sometimes run the risk of exceeding the breakdown potential of the junction. This is particularly true in the case of the emitter junction, which breaks down at lower reverse voltages. If the $V_{(BR)EBO}$ of the transistor is not known and if a battery voltage of several volts or more is used in the ohmmeter, it is best to disconnect the transistor.

Ohmmeter readings that intentionally or accidentally forward bias a transistor junction also run the risk of causing excessive current to flow through the transistor. The forward-biased junction is practically a short, so that the total current flowing is determined mainly by the ohmmeter's voltage supply and its internal resistance. Many ohmmeters, including electronic VOM's, supply a short-circuit current of 100 mA when used on the Rx1 scale. This current can damage many transistors. To prevent any danger of damage, only use those resistance ranges where the short circuit current is below 1 mA. For most service-type instruments, use of the Rx100 and Rx10k ranges is safe. Do not read forward-bias currents on the Rx1 scale.

Summing up, ohmmeter readings require some judgment before they are made. You need to know three things about the ohmmeter before making measurements: the polarity of the voltage at the leads, the voltage of the internal battery, and the short-circuit current. Also, unless shunt paths can be definitely eliminated by proper polarization, one lead of the component to be checked must be disconnected.

Other Test Equipment - Note that under certain conditions leakage voltage can exist between a piece of line-operated test gear and the chassis under test, which also can cause transistor damage. This subject is treated more fully in a later paragraph entitled "General Replacement Procedures."

Identifying Leads on Unmarked Transistors - Occasionally, identifying marks may be obliterated on the transistor case. The leads may then be identified with the few ohmmeter checks shown in Fig. B. In step 1, ohmmeter checks are made between each pair of leads in both the forward and reverse directions. Low readings (below 500 ohms) will be found when the ohmmeter places a forward bias across emitter and collector junctions. The highest forward reading is obtained when the meter is placed across the emitter and collector leads. This check establishes the base lead as the one that is not involved in the high forward-resistance reading.

Step 2 identifies the transistor type. An ohmmeter check is made between the base and one other lead. If a low-resistance reading is obtained when the negative side of the

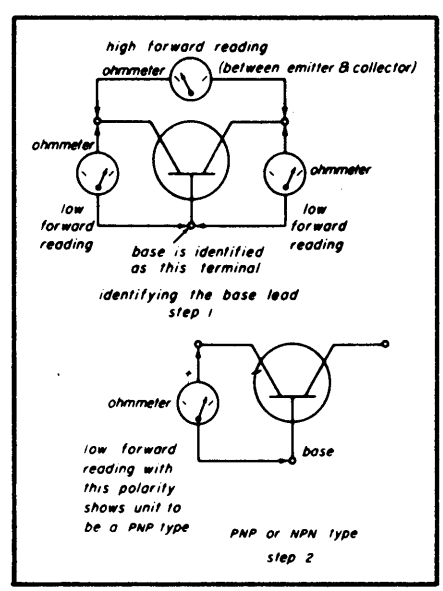

Fig. B - Hookup arrangement for identifying leads.

ohmmeter is connected to the base, the transistor is a PNP type. A low resistance reading when the base is positive indicates an NPN unit.

Testing Bipolar Transistors

A transistor that is operated within its ratings with respect to voltage, power dissipation, and temperature is normally expected to have an almost unlimited life. Failures in transistorized circuits are more often the result of damage or malfunctioning of some other component. This is particularly true when miniature transformers and electrolytic capacitors are employed. Despite the reliability of the transistor itself, failures occur due to shorts or opens in the bias circuitry, temporary overloads, physical damage, or even mishaps while servicing.

A great number of transistor testers and analyzers are available. Some only check leakage and current gain, while others are capable of measuring all of the transistor parameters. From a servicing viewpoint, a few simple tests are enough to reveal a great majority of troubles. These tests, to be described, reveal shorts, opens, excessive leakage, and provide a rough check of current gain. Fortunately, little equipment is required. Some of the tests require only an ohmmeter. The more elaborate checks can be made with just a few additional components.

Testing the Junctions - The transistor contains two p-n junctions or diodes. Most of the characteristics of the transistor are tied in with the behavior of the junctions, while the rest of the device simply serves as connective material. Damage to the transistor, therefore, almost always shows up as a malfunctioning of one of the rectifying junctions. The fault may be an open or shorted junction, or excessive reverse current (leakage).

A rough but useful check of the condition of the junctions may be made with an ohmmeter. First, the forward resistance of each junction is measured, as shown in Fig. C. In this figure, the connections for a PNP transistor are shown. The negative terminal of the ohmmeter is connected to the base. The forward resistance of both junctions is checked by touching the emitter and then the collector terminal in turn with the positive lead. A high reading indicates an open junction. A normal unit should show a reading below 500 ohms. Observe the precautions given earlier for using the ohmmeter. The forward resistance of the junctions of an NPN unit is checked with the same set up shown in Fig. C, but with the leads to the ohmmeter reversed.

To check for shorts or excessive leakage, reverse the ohmmeter connections and switch to a higher resistance scale, as shown in Fig. D. Now the ohmmeter places a reverse bias on each junction in turn, and leakage current is registered on the meter. A low resistance reading indicates a shorted or leaky junction. Low- and medium-power germanium transistors should show a resistance reading of at least 500 kilohms.

Typical readings taken with an ohmmeter on the Rx10k scale are 700 kilohms to 1.5 megohms. Silicon transistors give much higher resistance readings. Power transistors have larger junctions and therefore greater leakage currents. Reverse-bias resistance readings should be 50 kilohms or greater for power transistors.

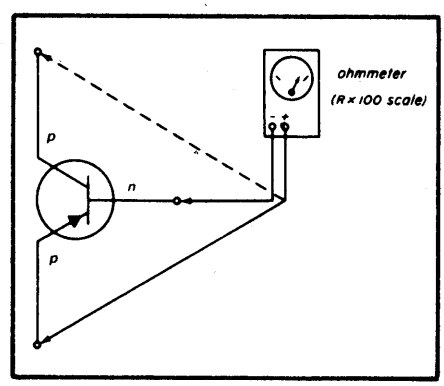

Fig. C - Method of checking the forward resistance of both junctions.

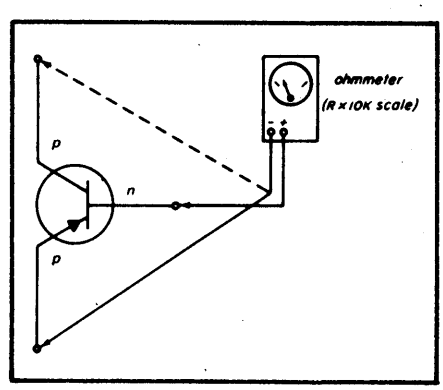

Fig. D - Method of checking the reverse resistance of both junctions.

Reverse-resistance checks on NPN transistors are made by reversing the ohmmeter leads so they are opposite to that shown in Fig. D. Note that the actual numerical reading in ohms is meaningless, because the ohmmeter can only measure linear resistances. The specific ohms-reading changes from meter to meter and is not the same for different settings of the range switch. The minimum and maximum values given here apply in the majority of cases. To increase the accuracy of the ohmmeter check, the readings should be compared with those made on a known good transistor of the same type.

Current Gain - Transistor action may be checked with an ohmmeter by means of the set up shown in Fig. E. The meter registers I_{CEO} before the 500-kilohm resistor is touched to the base. Connecting the resistor allows a small base bias to be applied, and the meter shows an increase in current (decrease in resistance reading).

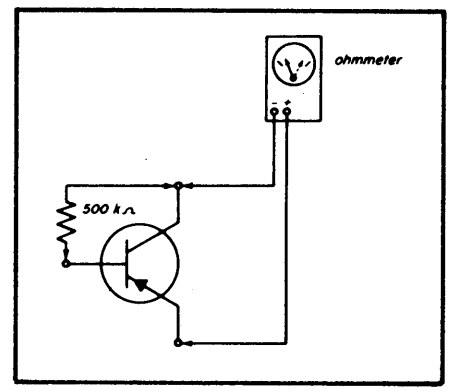

Fig. E - Gain measurement using an ohmmeter.

Testing Field-Effect Transistors

Testing field-effect devices is somewhat more complicated than testing bipolars and must take into account the following:

1. Is the device a JFET or MOSFET?
2. Is the FET an n-channel or p-channel type?

3. If the device is a MOSFET, is it an enhancement or depletion type?

Do not attempt to remove from the circuit or handle an FET unless certain that the device is a JFET or an insulated-gate-protected MOSFET. This verification is essential, because an uninsulated-gate-protected MOSFET may be damaged unless proper handling precautions are taken. When handling or inserting or removing this type of MOSFET, the following should be observed:

1. Prior to assembly into a circuit, all leads should be kept shorted together by either the use of metal shorting springs attached to the device by the vendor, or by the use of a conductive foam. Note - polystyrene "snow" should not be used because it can acquire high static charges.
2. When devices are removed by hand from their carriers, the hand being used should be at ground potential.
3. Tips of soldering irons should be grounded.
4. Devices should never be inserted into or removed from circuits with the power on.

Testing the JFET - The forward resistance of a JFET can be checked with a low-voltage ohmmeter, preferably on the Rx100 scale. Connect the negative lead to gate and the positive lead to the drain or source, if an n-channel JFET. Reverse the leads if a p-channel type.

To test the reverse resistance of an n-channel JFET, connect the positive lead of the ohmmeter to the gate and the negative lead to the drain or source. The device should show almost infinite resistance. Lower readings indicate either leakage or a short. Reverse the leads to test a p-channel device.

Testing the MOSFET - The forward resistance and reverse resistance can be checked with a low-voltage ohmmeter on the highest "R" scale. The insulated-gate MOSFET has an extremely high input resistance. Hence, we should obtain almost infinite resistance readings for both forward and reverse resistance tests between gate and drain or source. Lower readings indicate a breakdown in the insulation between gate and drain or source.

Testing Diodes

Diodes and Rectifiers - Because diodes and rectifiers are non-amplifying devices, simple tests for shorts, opens, or excessive leakage are useful methods to determine if they are functioning properly. The following tests are not applicable to the special case of focus diodes and high-voltage triplers, however.

The forward resistance of a diode or rectifier is checked by connecting the positive and negative leads of an ohmmeter, preferably set to the Rx100 scale, to their respective positive (anode) and negative (cathode) terminals. A reading of about 500 to 600 ohms is normal for silicon types, about 200 to 300 ohms for germanium types, and for larger-type rectifiers (germanium or silicon) the resistance is somewhat lower than their respective diode types. Because high-voltage types may have several diodes in series, higher resistance readings can be expected.

As a quick go/no-go test, the ohmmeter procedure just described is a good technique.

To check for shorts or excessive leakage, switch to a higher resistance scale and reverse the ohmmeter leads. A low resistance reading indicates a short or leaky device. Germanium diodes should show a resistance reading from about 100 kilohms to 1 megohm. Silicon diodes show higher resistance readings and can go up to 1000 megohms. However, some diodes may show lower resistances but function satisfactorily in some circuits. Rectifiers, because they generally have larger junctions, have higher leakage currents.

Zener Diodes - To quickly determine if Zeners have opens, shorts, or leakage, connect an ohmmeter in the forward direction in the same manner as described for standard diodes. However, these tests, although helpful, do not provide the primary information needed for a Zener diode, namely, is the device regulating at its rated value? A regulation test is accomplished with a metered adjustable power supply that preferably indicates voltage and current.

Connect the output of the power supply through a limiting resistor in series with the Zener diode to be tested and slowly increase the output voltage until the specified current is flowing through the Zener (see Fig. F). Now connect a voltmeter across the Zener to monitor the Zener voltage. Fluctuate the current on either side of the specified Zener current; if the Zener is operating properly, the voltage should remain constant.

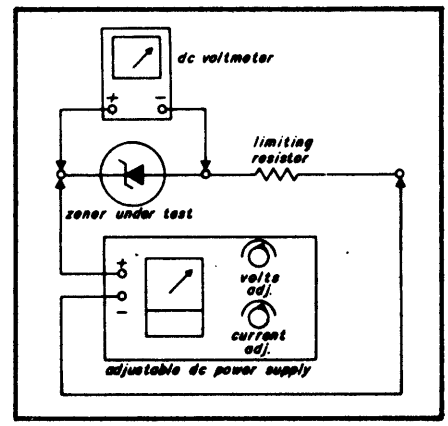

Fig. F - Hookup arrangement for testing Zener diodes.

Testing SCRs and TRIACs

A test can be performed on many SCRs and TRIACs for an approximate evaluation of their gate-firing capabilities by connecting an ohmmeter as shown in Fig. G. The negative lead is connected to cathode and the positive lead is connected to anode. Using the Rx1 scale, short the gate to the anode. A reading of approximately 15 to 50 ohms is normal. Note: when the gate-to-anode short is removed, the same reading should still show on the meter until the leads are removed from cathode or the anode. Now, reconnecting the meter leads to cathode and anode should show no reading until the gate is again shorted to the anode.

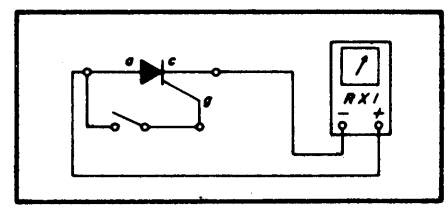

Fig. G - Hookup arrangement for testing thyristors with an ohmmeter.

Index/Product List

ECG No.	Page No.	Fig. No.	Description
HiDiv-1	39	125	High-Voltage Divider/Focus Assby., 240 M Ohms, 35 kV
HiDiv-2	39	125	High-Voltage Divider/Focus Assby., 244 M Ohms, 35 kV
HiDiv-3	39	126	High-Voltage Divider/Focus Assby., 240 M Ohms, 35 kV
74C00	133	L1	IC-CMOS Quad 2-Input NAND Gate
74C02	133	L4	IC-CMOS Quad 2-Input NOR Gate
74C04	133	L6	IC-CMOS Hex Inverter
74C08	133	L8	IC-CMOS Quad 2-Input AND Gate
74C10	133	L9	IC-CMOS Triple 3-Input NAND Gate
74C14	134	L13	IC-CMOS Hex Schmitt Trigger
74C20	134	L17	IC-CMOS Dual 4-Input NAND Gate
74C42	135	L32	IC-CMOS BCD-to-Decimal Decoder
74C48	135	L33	IC-CMOS BCD-to-Seven Segment Decoder
74C73	136	L51	IC-CMOS Dual J-K Flip-Flop with Clear
74C74	136	L52	IC-CMOS Dual "D Type" Flip-Flop
74C76	136	L54	IC-CMOS Dual J-K Flip-Flop with Clear and Preset
74C85	137	L60	IC-CMOS 4-Bit Magnitude Comparator
74C90	137	L65	IC-CMOS 4-Bit Decade Counter
74C93	137	L68	IC-CMOS 4-Bit Binary Counter
74C151	140	L101	IC-CMOS 8-Channel Digital Multiplexer
74C154	140	L104	IC-CMOS 4-Line-to-16-Line Decoder/Demultiplexer
74C157	141	L106	IC-CMOS Quad 2-Input Multiplexer
74C161	141	L107	IC-CMOS Binary Counter with Asynchronous Clear
74C164	141	L108	IC-CMOS 8-Bit Parallel-Out Serial Shift Register
74C173	141	L112	IC-CMOS Quad "D Type" Flip-Flop
74C174	141	L113	IC-CMOS Hex "D Type" Flip-Flop
74C175	141	L114	IC-CMOS Quad "D Type" Flip-Flop
74C192	142	L123	IC-CMOS Synchronous 4-Bit Up/Down Decade Counter
74C193	142	L123	IC-CMOS Synchronous 4-Bit Up/Down Binary Counter
74C221	142	L128	IC-CMOS Dual Monostable Multivibrator
74C925	144	L145	IC-CMOS 4-Digit Counter with Multiplexed 7-Segment Output Driver
74H00	133	L1	IC-TTL Hi Speed Quad 2-Input Pos NAND Gate
74H01	133	L3	IC-TTL Hi Speed Quad 2-Input Pos NAND Gate with Open Collector Output
74H04	133	L6	IC-TTL Hi Speed Hex Inverter
74H05	133	L6	IC-TTL Hi Speed Hex Inverter with Open Collector Output
74H08	133	L8	IC-TTL Hi Speed Quad 2-Input Pos AND Gate
74H10	133	L9	IC-TTL Hi Speed Triple 3-Input Pos NAND Gate
74H11	133	L10	IC-TTL Hi Speed Triple 3-Input Pos AND Gate
74H20	134	L17	IC-TTL Hi Speed Dual 4-Input Pos NAND Gate
74H21	134	L18	IC-TTL Hi Speed Dual 4-Input Pos AND Gate
74H22	134	L19	IC-TTL Hi Speed Dual 4-Input Pos NAND Gate with Open Collector Output
74H30	134	L25	IC-TTL Hi Speed Single 8-Input Pos NAND Gate
74H40	135	L30	IC-TTL Hi Speed Dual 4-Input Pos NAND Buffer
74H50	135	L34	IC-TTL Hi Speed Dual AND/OR Gate Inverter/Expander
74H51	135	L35	IC-TTL Hi Speed Dual 2-Input AND/OR Invert Gate
74H52	135	L38	IC-TTL Hi Speed 2-2-2-3 Input AND/OR Gate
74H53	135	L40	IC-TTL Hi Speed Expandable 2-2-2-3 Input AND/OR Invert Gate
74H54	135	L42	IC-TTL Hi Speed 2-2-2-3 Input AND/OR Invert Gate
74H55	136	L43	IC-TTL Hi Speed 2-Wide 4-Input AND/OR Invert Gate
74H60	136	L44	IC-TTL Hi Speed Dual 4-Input Expander
74H61	136	L45	IC-TTL Hi Speed Triple 3-Input Expander
74H62	136	L46	IC-TTL Hi Speed 3-2-2-3 Input AND/OR Expander
74H71	136	L49	IC-TTL Hi Speed J-K M/S Flip-Flop with AND/OR Gate Inputs
74H72	136	L50	IC-TTL Hi Speed J-K M/S Flip-Flop with AND Gate Inputs
74H73	136	L51	IC-TTL Hi Speed Dual J-K M/S Flip-Flop with Separate Clears and Clocks
74H74	136	L52	IC-TTL Hi Speed Dual "D Type" Edge Triggered Flip-Flop
74H76	136	L54	IC-TTL Hi Speed Dual J-K M/S Flip-Flop with Separate Presets, Clears and Clocks
74H78	136	L55	IC-TTL Hi Speed Dual M/S Flip-Flop with Separate Presets, and a Common Clear and Clock
74H86	137	L61	IC-TTL Hi Speed Quad Exclusive OR Gate
74H87	137	L62	IC-TTL Hi Speed 4-Bit True/Complement-Zero/One Element
74H101	138	L73	IC-TTL Hi Speed J-K Negative Edge Triggered Flip-Flop with AND/OR Inputs
74H102	138	L74	IC-TTL Hi Speed J-K Negative Edge Triggered Flip-Flop with AND Inputs
74H103	138	L75	IC-TTL Hi Speed J-K Negative Edge Triggered Flip-Flop with Separate Clears and Clocks
74H106	138	L76	IC-TTL Hi Speed Dual J-K Negative Edge Triggered Flip-Flop with Separate Presets, Clocks and Clears
74H108	138	L78	IC-TTL Hi Speed Dual J-K Negative Edge Triggered Flip-Flop with Separate Presets, and a Common Clear and Clock
74H183	142	L121	IC-TTL Hi Speed Dual Carry/Save Full Adder
74L93	--	--	IC-TTL 4-Bit Binary Counter
74LS00	133	L1	IC-TTL Lo Pwr Schottky Quad 2-Input Pos NAND Gate
74LS02	133	L4	IC-TTL Lo Pwr Schottky Quad 2-Input Pos NOR Gate
74LS03	133	L5	IC-TTL Lo Pwr Schottky Quad 2-Input Pos NAND Gate with Open Collector Output
74LS04	133	L6	IC-TTL Lo Pwr Schottky Hex Inverter
74LS05	133	L6	IC-TTL Lo Pwr Schottky Hex Inverter with Open Collector Output
74LS08	133	L8	IC-TTL Lo Pwr Schottky Quad 2-Input Pos AND Gate
74LS10	133	L9	IC-TTL Lo Pwr Schottky Triple 3-Input Pos NAND Gate
74LS11	133	L10	IC-TTL Lo Pwr Schottky Triple 3-Input Pos AND Gate
74LS14	134	L13	IC-TTL Lo Pwr Schottky Hex Schmitt Trigger
74LS20	134	L17	IC-TTL Lo Pwr Schottky Dual 4-Input Pos NAND Gate
74LS27	134	L23	IC-TTL Lo Pwr Schottky Triple 3-Input Pos NOR Gate
74LS30	134	L25	IC-TTL Lo Pwr Schottky 8-Input Pos NAND Gate
74LS32	134	L26	IC-TTL Lo Pwr Schottky Quad 2-Input Pos OR Gate
74LS38	135	L28	IC-TTL Lo Pwr Schottky Quad 2-Input Pos NAND Buffer with Open Collector Output
74LS42	135	L32	IC-TTL Lo Pwr Schottky 4-Line-to-10-Line Decoder (1-of-10) BCD-to-Decimal
74LS49	--	--	IC-TTL Lo Pwr Schottky BCD-to-Seven Segment Decoder/Driver
74LS51	135	L36	IC-TTL Lo Pwr Schottky Dual AND/OR Invert Gate
74LS73	136	L51	IC-TTL Lo Pwr Schottky Dual J-K Flip-Flop
74LS74A	136	L52	IC-TTL Lo Pwr Schottky Dual "D Type" Flip-Flop
74LS75	136	L53	IC-TTL Lo Pwr Schottky 4-Bit Bistable Latch
74LS83A	137	L59	IC-TTL Lo Pwr Schottky 4-Bit Full Adder
74LS85	137	L60	IC-TTL Lo Pwr Schottky 4-Bit Magnitude Comparator
74LS86	137	L61	IC-TTL Lo Pwr Schottky Quad Exclusive OR Gate
74LS93	137	L68	IC-TTL Lo Pwr Schottky 4-Bit Binary Counter
74LS107	138	L77	IC-TTL Lo Pwr Schottky Dual J-K Flip-Flop
74LS109A	138	L79	IC-TTL Lo Pwr Schottky Dual J-K Pos Edge Triggered Flip-Flop
74LS123	139	L87	IC-TTL Lo Pwr Schottky Dual Retriggerable Monostable Multivibrator
74LS136	140	L95	IC-TTL Lo Pwr Schottky Quad Exclusive OR Gate with Open Collector Output
74LS138	140	L96	IC-TTL Lo Pwr Schottky 1-of-8 Decoder/Demultiplexer
74LS151	140	L101	IC-TTL Lo Pwr Schottky 8-Input Multiplexer
74LS153	140	L103	IC-TTL Lo Pwr Schottky Dual 4-Input Multiplexer
74LS157	141	L106	IC-TTL Lo Pwr Schottky Quad 2-Input Multiplexer Non-Inverting
74LS161A	141	L107	IC-TTL Lo Pwr Schottky 4-Bit Binary Counter Asynchronous Reset
74LS163A	141	L107	IC-TTL Lo Pwr Schottky 4-Bit Binary Counter Synchronous Reset
74LS164	141	L108	IC-TTL Lo Pwr Schottky 8-Bit Shift Register Serial In-Parallel Out
74LS174	141	L113	IC-TTL Lo Pwr Schottky Hex "D Type" Flip-Flop with Clear
74LS175	141	L114	IC-TTL Lo Pwr Schottky Quad "D Type" Flip-Flop with Clear
74LS191	142	L122	IC-TTL Lo Pwr Schottky Up/Down Binary Counter
74LS193	142	L123	IC-TTL Lo Pwr Schottky Up/Down Binary Counter
74LS195A	142	L125	IC-TTL Lo Pwr Schottky 4-Bit Shift Register
74LS221	142	L128	IC-TTL Lo Pwr Schottky Dual Monostable Multivibrator Schmitt Trigger
74LS240	142	L129	IC-TTL Lo Pwr Schottky Octal 3-State Driver
74LS241	143	L130	IC-TTL Lo Pwr Schottky Octal 3-State Driver
74LS242	143	L131	IC-TTL Lo Pwr Schottky Quad Bus Transceiver
74LS243	143	L132	IC-TTL Lo Pwr Schottky Quad Bus Transceiver
74LS244	143	L133	IC-TTL Lo Pwr Schottky Octal 3-State Driver
74LS248	--	--	IC-TTL Lo Pwr Schottky BCD-to-Seven Segment Decoder/Driver
74LS249	--	--	IC-TTL Lo Pwr Schottky BCD-to-Seven Segment Decoder/Driver
74LS253	143	L135	IC-TTL Lo Pwr Schottky Dual 4-Input Multiplexer 3-State
74LS257	143	L136	IC-TTL Lo Pwr Schottky Quad 2-Input Multiplexer 3-State
74LS259	143	L138	IC-TTL Lo Pwr Schottky 8-Bit Addressable Latch
74LS266	143	L139	IC-TTL Lo Pwr Schottky Quad Exclusive NOR Gate with Open Collector Output
74LS273	143	L140	IC-TTL Lo Pwr Schottky Octal "D Type" Flip-Flop with Clear
74LS280	143	L141	IC-TTL Lo Pwr Schottky 9-Bit Odd/Even Parity Generator/Checker
74LS298	144	L142	IC-TTL Lo Pwr Schottky Quad 2-Input Multiplexer with Output Latch
74LS367	144	L143	IC-TTL Lo Pwr Schottky Hex Buffer, 4-Bit and 2-Bit 3-State
74LS377	144	L144	IC-TTL Lo Pwr Schottky Octal "D Type" Flip-Flop with Enable
74S00	133	L1	IC-TTL Ultra-Hi Speed Quad 2-Input Pos NAND Gate
74S02	133	L4	IC-TTL Ultra-Hi Speed Quad 2-Input Pos NOR Gate
74S03	133	L5	IC-TTL Ultra-Hi Speed Quad 2-Input Pos NAND Gate with Open Collector Output
74S04	133	L6	IC-TTL Ultra-Hi Speed Hex Inverter
74S05	133	L6	IC-TTL Ultra-Hi Speed Hex Inverter with Open Collector Output
74S08	133	L8	IC-TTL Ultra-Hi Speed Quad 2-Input AND Gate

Index/Product List (cont'd)

ECG No.	Page No.	Fig. No.	Description
74S09	133	L8	IC-TTL Ultra-Hi Speed Quad 2-Input Pos AND Gate with Open Collector Output
74S10	133	L9	IC-TTL Ultra-Hi Speed Triple 3-Input Pos NAND Gate
74S11	133	L10	IC-TTL Ultra-Hi Speed Triple 3-Input Pos AND Gate
74S15	134	L14	IC-TTL Ultra-Hi Speed Triple 3-Input Pos AND Gate with Open Collector Output
74S20	134	L17	IC-TTL Ultra-Hi Speed Dual 4-Input Pos NAND Gate
74S22	134	L19	IC-TTL Ultra-Hi Speed Dual 4-Input Pos NAND Gate with Open Collector Output
74S30	134	L25	IC-TTL Ultra-Hi Speed Single 8-Input Pos NAND Gate
74S40	135	L30	IC-TTL Ultra-Hi Speed Dual 4-Input Pos NAND Buffer
74S51	135	L37	IC-TTL Ultra-Hi Speed Expandable Dual 2-Wide 2-Input AND/OR Invert Gate
74S64	136	L47	IC-TTL Ultra-Hi Speed 4-2-3-2 Input AND/OR Invert Gate
74S65	136	L47	IC-TTL Ultra-Hi Speed 4-2-3-2 Input AND/OR Invert Gate with Open Collector Output
74S74	136	L52	IC-TTL Ultra-Hi Speed Dual "D Type" Edge Triggered Flip-Flop
74S86	137	L61	IC-TTL Ultra-Hi Speed Quad 2-Input Exclusive OR Gate
74S112	139	L82	IC-TTL Ultra-Hi Speed Dual J-K Negative Edge Triggered Flip-Flop
74S113	139	L83	IC-TTL Ultra-Hi Speed Dual J-K Negative Edge Triggered Flip-Flop with Individual J, K Preset and Clock Inputs
74S114	139	L84	IC-TTL Ultra-Hi Speed Dual J-K Negative Edge Triggered Flip-Flop with Common Clock and Common Clear and Individual J, K and Preset Inputs
74S124	139	L88	IC-TTL Ultra-Hi Speed Dual Voltage Controlled Oscillator
74S133	139	L93	IC-TTL Ultra-Hi Speed 13-Input NAND Gate
74S134	140	L94	IC-TTL Ultra-Hi Speed 12-Input NAND Gate
74S138	140	L96	IC-TTL Ultra-Hi Speed 3-Line-to-8-Line Decoder/Demultiplexer
74S140	140	L97	IC-TTL Ultra-Hi Speed Dual 4-Input NAND Line Driver
74S151	140	L101	IC-TTL Ultra-Hi Speed 8-Input Data Selector/Multiplexer with Complementary Outputs
74S153	140	L103	IC-TTL Ultra-Hi Speed Dual 4-Line-to-1-Line Data Selector/Multiplexer
74S157	141	L106	IC-TTL Ultra-Hi Speed Quad 2-Line-to-1-Line Data Selector/Multiplexer with True Data Outputs
74S158	141	L106	IC-TTL Ultra-Hi Speed Quad 2-Line-to-1-Line Data Selector/Multiplexer with Inverted Data Output
74S174	141	L113	IC-TTL Ultra-Hi Speed Hex "D Type" Flip-Flop with Clear
74S175	141	L114	IC-TTL Ultra-Hi Speed Quad "D Type" Flip-Flop with Clear
74S181	142	L119	IC-TTL Ultra-Hi Speed Arithmetic Logic Units/Function Generator
74S194	142	L124	IC-TTL Ultra-Hi Speed 4-Bit Bidirectional Universal Shift Register
74S251	143	L134	IC-TTL Ultra-Hi Speed 1-of-8 Multiplexer
74S258	143	L137	IC-TTL Ultra-Hi Speed Quad 2-Line-to-1-Line Data Selector/Multiplexer
80C97	144	L146	IC-CMOS Hex Non-Inverting Buffer
100	19	1	T-PNP, Ge-RF/IF Amp, Osc, Mxr, AM
101	19	1	T-NPN, Ge-RF/IF Amp, Osc, Mxr, AM
102	19	1	T-PNP, Ge-AF Preamp, Dr, PO
102A	19	12	T-PNP, Ge-AF Preamp, Dr, PO
103	19	1	T-NPN, Ge-AF Preamp, Dr, PO
103A	19	12	T-NPN, Ge-AF Preamp, Dr, PO
104	19	2	T-PNP, Ge-AF PO
104MP	19	2	T-PNP, Ge-Matched Pair of ECG104
105	19	3	T-PNP, Ge-AF PO
106	19	4	T-PNP, Si-RF/IF Amp, Osc, Mxr, AM/FM
107	19	19	T-NPN, Si-RF/IF Amp, Osc, Mxr, UHF/VHF
108	19	19	T-NPN, Si-RF/IF/Vid Amp, Osc, Mxr, UHF/VHF
109	33	66	D-Ge-Gen Purp, 75 PRV
110	33	66	D-Ge-Matched Pair
112	33	66	D-Si-UHF TV, Mxr
113A	33	68	D-Dual, Si-Horiz AFC, Common Cathode
114	33	68	D-Dual, Se-Horiz AFC, Series Connected
115	33	68	D-Dual, Se-Horiz AFC, Common Anode
116	33	72	R-Si-600 PRV, 1.0 Amp
117	33	70	R-Si-600 PRV, 1.0 Amp
118	35	78	R-Se-TV HiV, Foc, 7.5 k PRV
119	35	79	R-Se-TV Boost, 560 PRV
120	33	71	R-Se-TV Converge, 18 PRV
121	19	2	T-PNP, Ge-AF PO
121MP	19	2	Matched Pair of ECG121
122	43	172	SCR-200 VRM, 8.0 A
123	19	1	T-NPN, Si-AF Preamp, Dr, Vid Amp, Sync Sep
123A	19	4	T-NPN, Si-AF/RF Amp
123AP	19	19	T-NPN, Si-AF/RF Amp, CB Dr
124	19	7	T-NPN, Si-HiV AF PO
125	33	72	R-Si-1000 PRV, 2.5 A
126	19	4	T-PNP, Ge-RF/IF Amp, Osc, Mxr, AM/VHF
127	19	2	T-PNP, Ge-Defl Amp, AF PO
128	19	10	T-NPN, Si-AF Preamp, Dr, Vid Amp
129	19	10	T-PNP, Si-AF Preamp, Dr, Vid Amp
130	19	2	T-NPN, Si-AF PO
130MP	19	2	T-NPN, Si-Matched Pair of ECG130
131	19	8	T-PNP, Ge-AF PO
131MP	19	8	T-PNP, Ge-Matched Pair of ECG131
132	27	13	JFET-N-Ch, VHF Amp/Mix
133	27	13	JFET-N-Ch, Gen Purp AF Amp/Sw
134A	42	155	ZD-3.6 V, 1 W
135A	42	155	ZD-5.1 V, 1 W
136A	42	155	ZD-5.6 V, 1 W
137A	42	155	ZD-6.2 V, 1 W
138A	42	155	ZD-7.5 V, 1 W
139A	42	155	ZD-9.1 V, 1 W
140A	42	155	ZD-10.0 V, 1 W
141A	42	155	ZD-11.5 V, 1 W
142A	42	155	ZD-12.0 V, 1 W
143A	42	155	ZD-13.0 V, 1 W
144A	42	155	ZD-14.0 V, 1 W
145A	42	155	ZD-15.0 V, 1 W
146A	42	155	ZD-27.0 V, 1 W
147A	42	155	ZD-33.0 V, 1 W
148A	42	155	ZD-55.0 V, 1 W
149A	42	155	ZD-62.0 V, 1 W
150A	42	155	ZD-82.0 V, 1 W
151A	42	155	ZD-110.0 V, 1 W
152	19	9	T-NPN, Si-AF PO
153	19	9	T-PNP, Si-AF PO
154	19	10	T-NPN, Si-Vid Output
155	19	8	T-NPN, Ge-AF PO
156	33	69	R-Si-1000 PRV, 3 A
157	19	11	T-NPN, Si-HiV AF PO
158	20	12	T-PNP, Ge-AF PO
159	20	19	T-PNP, Si-AF Preamp, Dr
160	20	14	T-PNP, Ge-RF/IF Amp, Osc, Mxr, AM/FM
161	20	14	T-NPN, Si-Vid IF Amp
162	20	2	T-NPN, Si-Vert Defl
163A	20	2	T-NPN, Si-Horiz Defl
164	20	2	T-NPN, Si-Vert Defl
165	20	2	T-NPN, Si-Horiz Defl
166	34	73	R-Si-Bridge, 100 PRV, 2 A
167	34	73	R-Si-Bridge, 200 PRV, 2 A
168	34	73	R-Si-Bridge, 400 PRV, 2 A
169	34	73	R-Si-Bridge, 600 PRV, 2 A
170	34	73	R-Si-Bridge, 1000 PRV, 2 A
171	20	15	T-NPN, Si-AF/Vid Amp
172A	20	5	T-NPN, Si-Darlington Amp, AF, Sw
173BP	33	74	D-Dual Silicon Damper, 5000 PRV
174	33	75	D-Ge-Damper, 270 PRV, 6 A
175	20	7	T-NPN, Si-AF PO
176	20	10	T-PNP, Ge-AF PO
177	33	76	D-Si-Gen Purp Det, 200 PRV
178MP	33	77	D-Si-AFC, AFT, 50 PRV
179	20	2	T-PNP, Ge-AF Amp
180	20	2	T-PNP, Si-AF Amp
181	20	2	T-NPN, Si-AF Amp
182	20	16	T-NPN, Si-AF PO
183	20	16	T-PNP, Si-AF PO
184	20	11	T-NPN, Si-AF PO
185	20	11	T-PNP, Si-AF PO
186	20	15	T-NPN, Si-AF PO
186A	20	27	T-NPN, Si-AF PO/CB Dr
187	20	15	T-PNP, Si-AF PO
187A	20	27	T-PNP, Si-AF PO
188	20	17	T-NPN, Si-AF Dr, PO
189	20	17	T-PNP, Si-AF Dr, PO
190	20	17	T-NPN, Si-AF PO, Horiz Dr
191	20	17	T-NPN, Si-HiV AF/Vid Amp
192	20	18	T-NPN, Si-AF PO
192A	20	18	T-NPN, Si-AF PO
193	20	18	T-PNP, Si-AF PO
193A	20	18	T-PNP, Si-AF PO
194	20	19	T-NPN, Si-HiV, Gen Purp Amp
195A	20	10	T-NPN, Si-CB RF PO/Dr
196	20	9	T-NPN, Si-AF PO
197	21	9	T-PNP, Si-AF PO
198	21	9	T-NPN, Si-HiV AF, Sw
199	21	5	T-NPN, Si-Lo-Noise, Hi Gain Preamp
200	--	--	Photoconductor, Cds
202	--	--	Circuit Breaker, 1 A
203	160	435	Transistor Socket, Saddle Mt, Lo Pwr
204	--	--	Circuit Breaker, 2 A
205	--	--	Circuit Breaker, 3 A
207	--	--	Pilot Lamp Assembly, 120 V
209	160	436	Transistor Socket, TO-3 Pwr
210	21	15	T-NPN, Si-AF PO, Sw
211	21	15	T-PNP, Si-AF PO, Sw
213	21	3	T-PNP, Ge-Hi Current, Pwr
218	21	7	T-PNP, Si-AF PO
219	21	2	T-PNP, Si-AF PO, Sw
220	27	14	MOSFET-N-Ch, VHF Amp/Mix
221	27	14	MOSFET-N-Ch, VHF Amp/Mix
222	27	14	MOSFET-N-Ch, VHF Amp/Mix

Index/Product List (cont'd)

ECG No.	Page No.	Fig. No.	Description
223	21	20	T-NPN, Si-AF PO, Switch
224	21	21	T-NPN, Si-RF PO, 27 MHz
225	21	21	T-NPN, Si-AF, Vid, Switch
226	21	22	T-PNP, Ge-AF PO
226MP	21	22	Matched Pair of ECG226
228A	21	27	T-NPN, Si-Hi Speed Sw, AF/Vid PO
229	21	19	T-NPN, Si-VHF Osc/Mxr, IF Amp
230	44	173	SCR-Horiz Defl
231	44	173	SCR-Horiz Defl
232	21	19	T-PNP, Si-Darl Amp
233	21	19	T-NPN, Si-Final Vid IF Amp
234	21	19	T-PNP, Si-AF Preamp-Lo Noise, Hi Gain
235	21	9	T-NPN, Si-VHF PO (5.0 W at 50 MHz)
236	21	9	T-NPN, Si-VHF PO (13 W at 50 MHz)
237	21	26	T-NPN, Si-VHF PO (3 W at 27 MHz)
238	21	2	T-NPN, Si-Horiz Defl
239	48	197	SCS-Switching, TV Vert Osc
241	21	24	T-NPN, Si-AF PO, Sw
242	21	24	T-PNP, Si-AF PO, Sw
243	28	2	T-NPN, Darl 80 V, 8 A, hfe = 3000 (Typ)
244	28	2	T-PNP, Darl 80 V, 8 A, hfe = 3000 (Typ)
245	28	2	T-NPN, Darl 80 V, 10 A, hfe = 4000 (Typ)
246	28	2	T-PNP, Darl 80 V, 10 A, hfe = 4000 (Typ)
247	28	2	T-NPN, Darl 100 V, 12 A, hfe = 3500 (Typ)
248	28	2	T-PNP, Darl 100 V, 12 A, hfe = 3500 (Typ)
249	28	2	T-NPN, Darl 100 V, 16 A, hfe = 3500 (Typ)
250	28	2	T-PNP, Darl 100 V, 16 A, hfe = 3500 (Typ)
251	28	2	T-NPN, Darl 100 V, 20 A, hfe = 2400 (Typ)
252	28	2	T-PNP, Darl 100 V, 20 A, hfe = 2400 (Typ)
253	28	11	T-NPN, Darl 80 V, 4 A, hfe = 2000 (Typ)
254	28	11	T-PNP, Darl 80 V, 4 A, hfe = 2000 (Typ)
257	28	16	T-NPN, Darl 80 V, 5 A, hfe = 750 (Min)
258	28	16	T-PNP, Darl 80 V, 5 A, hfe = 750 (Min)
259	28	16	T-NPN, Darl 100 V, 8 A, hfe = 2500 (Typ)
260	28	16	T-PNP, Darl 100 V, 8 A, hfe = 2500 (Typ)
261	28	9	T-NPN, Darl 80 V, 8 A, hfe = 1000 (Min)
262	28	9	T-PNP, Darl 80 V, 8 A, hfe = 1000 (Min)
263	28	9	T-NPN, Darl 80 V, 10 A, hfe = 1000 (Min)
264	28	9	T-PNP, Darl 80 V, 10 A, hfe = 1000 (Min)
265	28	15	T-NPN, Darl 50 V, 500 mA, hfe = 10,000 (Min)
266	28	15	T-NPN, Darl 50 V, 500 mA, hfe = 40,000 (Min)
267	28	15	T-NPN, Darl 30 V, 500 mA, hfe = 90,000 (Min)
268	28	15	T-NPN, Darl 50 V, 2 A, hfe = 1000 (Min)
269	28	15	T-PNP, Darl 50 V, 2 A, hfe = 1000 (Min)
270	28	23	T-NPN, Darl 100 V, 10 A, hfe = 1000 (Min)
271	28	23	T-PNP, Darl 100 V, 10 A, hfe = 1000 (Min)
272	28	17	T-NPN, Darl 40 V, 2 A, hfe = 25,000 (Min)
273	28	17	T-PNP, Darl 40 V, 2 A, hfe = 25,000 (Min)
274	28	7	T-NPN, Darl 80 V, 4 A, hfe = 3000 (Typ)
275	28	7	T-PNP, Darl 80 V, 4 A, hfe = 3000 (Typ)
276	44	165	SCR-Gate Controlled Switch, TV Horiz Output
277	21	8	T-NPN, Si-TV Horiz Output
278	21	10	T-NPN, Si-Broad Band RF Amp, CATV/MATV/COMM
279	44	166	SCR-Gate Controlled Switch, Horiz Output
280	21	2	T-NPN, Si-AF PO, Pd 100 W
280MP	21	2	Matched Pair of ECG280
281	21	2	T-PNP, Si-AF PO, Pd 100 W
282	21	10	T-NPN, Si-RF Pwr Amp/Sw, Pd 10 W
283	21	2	T-NPN, Si-HiV-Hi Current Sw and TV Horiz Output
284	21	2	T-NPN, Si-AF PO, Pd 150 W
284MP	21	2	Matched Pair of ECG284
285	21	2	T-PNP, Si-AF PO, Pd 150 W
286	21	7	T-NPN, Si-PO/Sw, TV Horiz Output
287	21	19	T-NPN, Si-HiV Gen Purp Amp, Ft = 50 MHz
288	22	19	T-PNP, Si-HiV Gen Purp Amp, Ft = 50 MHz
289	22	29	T-NPN, Si-AF PO, Pd 0.6 W
289MP	22	29	Matched Pair of ECG289
290	22	29	T-PNP, Si-AF PO, Pd 0.6 W
291	22	9	T-NPN, Si-PO and Sw, Pd 40 W
292	22	9	T-PNP, Si-PO and Sw, Pd 40 W
293	22	30	T-NPN, Si-AF PO, Pd .75 W
293MP	22	30	Matched Pair of ECG293
294	22	30	T-PNP, Si-AF PO, Pd .75 W
295	22	11	T-NPN, Si-RF PO, Dr, CB
297	22	30	T-NPN, Si-AF PO, Dr, Pd .75 W
297MP	22	30	Matched Pair of ECG297
298	22	30	T-PNP, Si-AF PO, Dr, Pd .75 W
299	22	15	T-NPN, Si-RF PO, Dr, CB, Pd 4 W
300	22	15	T-NPN, Si-AF PO, Pd 7 W
300MP	22	15	Matched Pair of ECG300
302	22	31	T-NPN, Si-RF PO, Dr, Pd 8 W, CB
304	--	--	Kit-24 Most Popular ECG Transistors
306	22	31	T-NPN, Si-RF PO, Dr, Pd 8 W, CB
307	22	15	T-PNP, Si-AF PO, Pd 7 W
308	47	190	Integrated Thyristor and Rectifier (ITR)-TV Horiz Defl Commutating, Sw
309K	58	245	IC-Regulator, 5 V, 1 Amp
310	47	190	Integrated Thyristor and Rectifier (ITR)-TV Horiz Defl Trace Sw
311	22	10	T-NPN, VHF/UHF Dr/ Amp/PO, Pd 5 W
312	27	13	JFET-N-Ch, VHF Amp/Mix
313	22	32	T-NPN, Si-VHF Tuner Amp
314	44	167	SCR-Si, P-Gate, Pwr Regulator/Sw
315	22	33	T-NPN, Si-RF Dr, CB
316	22	14	T-NPN, Si-Lo-Noise, UHF Amp
317	22	34	T-NPN, Si-Final RF PO
318	22	34	T-NPN, Si-Final RF PO
319	22	14	T-NPN, Si-AGC-Controlled TV-IF
320	22	35	T-NPN, Si-Final RF PO
321	22	7	T-NPN, Si-Horiz Defl
322	22	17	T-NPN, Si-RF Pwr Amp, CB
323	22	10	T-PNP, Si-AF Pwr Amp
324	22	10	T-NPN, Si-AF Pwr Amp
325	22	25	T-NPN, Si-RF Pwr Amp
326	27	19	JFET-P-Ch, Gen Purp AF Amp
327	22	2	T-NPN, Si-Pwr Amp, Sw
328	22	2	T-NPN, Si-Pwr Amp, Sw
329	22	10	T-NPN, Si-RF Pwr Amp, CB
330	22	3	T-PNP, Ge-Fast Pwr Sw
330W	--	3	ECG330 with Welded-on Wire Leads
331	22	9	T-NPN, Si-AF PO, Reg, Sw
332	23	9	T-PNP, Si-AF PO, Reg, Sw
333	23	6	T-NPN, Si-RF PO, 14-30 MHz, 60 W
334	23	25	T-NPN, Si-RF PO, 14-30 MHz, 60 W
335	23	34	T-NPN, Si-RF PO, 14-30 MHz, 80 W
336	23	28	T-NPN, Si-RF PO, 14-30 MHz, 80 W
337	23	25	T-NPN, Si-RF Dr, 27-50 MHz, 8 W
338	23	25	T-NPN, Si-RF Dr & Output, 27-50 MHz, 20 W
339	23	28	T-NPN, Si-RF PO, 27-50 MHz, 40 W
340	23	30	T-NPN, Si-RF PO, Dr, 136-174 MHz, 600 mW
341	23	37	T-NPN, Si-RF PO, 136-174 MHz, 4 W
342	23	41	T-NPN, Si-RF PO, 136-174 MHz, 7 W
343	23	41	T-NPN, Si-RF PO, 136-174 MHz, 14 W
344	23	42	T-NPN, Si-RF PO, 136-174 MHz, 30 W
345	23	25	T-NPN, Si-RF PO, 136-174 MHz, 30 W
346	23	10	T-NPN, Si-RF Dr & Predriver, 136-174 MHz, 1 W
347	23	38	T-NPN, Si-RF PO, 136-174 MHz, 3 W
348	23	25	T-NPN, Si-RF PO, 136-174 MHz, 4 W
349	23	25	T-NPN, Si-RF PO, 136-174 MHz, 10 W
350	23	25	T-NPN, Si-RF PO, 136-174 MHz, 15 W
351	23	25	T-NPN, Si-RF PO, 136-174 MHz, 25 W
352	23	39	T-NPN, Si-RF PO, 136-174 MHz, 80 W
353	23	43	T-PNP, Si-RF PO, 136-174 MHz, 4 W
354	23	43	T-PNP, Si-RF PO, 136-174 MHz, 15 W
355	23	43	T-PNP, Si-RF PO, 136-174 MHz, 30 W
356	23	43	T-PNP, Si-RF PO, 136-174 MHz, 40 W
357	23	38	T-NPN, Si-RF PO, 30-200 MHz, 7 W
358	48	205	Xtal-Color Osc
358A	48	206	Xtal-Color Burst Filter
358B	48	205	Xtal-Color Osc
359	23	25	T-NPN, Si-RF PO, 30-200 MHz, 20 W
360	23	25	T-NPN, Si-RF PO, 30-200 MHz, 40 W
361	23	37	T-NPN, Si-RF PO, 407-512 MHz, 2 W
362	23	40	T-NPN, Si-RF PO, 407-512 MHz, 2 W
363	24	40	T-NPN, Si-RF PO, 407-512 MHz, 4 W
364	24	40	T-NPN, Si-RF PO, 407-512 MHz, 10 W
365	24	39	T-NPN, Si-RF PO, 407-512 MHz, 15 W
366	24	39	T-NPN, Si-RF PO, 407-512 MHz, 25 W
367	24	39	T-NPN, Si-RF PO, 407-512 MHz, 45 W
368	24	39	T-NPN, Si-RF PO, 407-512 MHz, 60 W
369	24	7	T-NPN, Si-Vert Output, Sw
370	58	254	IC-Squelch, AGC, AF Osc
371	58	254	IC-RF/IF Amp
373	24	11	T-NPN, Si-AF Driver
374	24	11	T-PNP, Si-AF Driver
375	24	9	T-NPN, Si-Vert Defl
376	24	9	T-NPN, Si-Pwr Amp
377	24	9	T-NPN, Si-Pwr Driver, PO, Sw, Reg
378	24	9	T-PNP, Si-Pwr Driver, PO, Sw, Reg
379	24	9	T-NPN, Si-HV Hi-Speed Pwr Sw
380	24	44	T-NPN, Si-AF Pwr Amp
381	24	44	T-PNP, Si-AF Pwr Amp
382	24	33	T-NPN, Si-AF Driver
383	24	33	T-PNP, Si-AF Driver
384	24	7	T-NPN, Si-Sw, Linear App
385	24	2	T-NPN, Si-HV Hi-Speed Sw
386	24	2	T-NPN, Si-HV Hi-Speed Sw
387	24	2	T-NPN, Si-Pwr Amp, Sw
388	24	2	T-NPN, Si-Hi-Pwr AF
389	24	2	T-NPN, Si-Horiz Output
390	24	23	T-NPN, Si-Pwr Amp, Hi-Speed Sw
391	24	23	T-PNP, Si-Pwr Amp, Hi-Speed Sw
392	24	23	T-NPN, Si-Pwr Amp, Hi-Speed Sw
393	24	23	T-PNP, Si-Pwr Amp, Hi-Speed Sw
394	24	23	T-NPN, Si-HV Pwr Amp, Sw
395	24	14	T-PNP, Si-Wide Band VHF/UHF Amp, Osc
396	24	10	T-NPN, Si-Linear Amp & Hi-Speed Sw
397	24	10	T-PNP, Si-Linear Amp & Hi-Speed Sw
400	160	425	Heat Sink-TO-5 Transistor, 1.9 W (2/Pkg)
401	160	426	Heat Sink-TO-5 Transistor, 3.0 W (2/Pkg)
402	160	427	Heat Sink-Plastic Pwr Transistor (2/Pkg)
403	160	428	Heat Sink-Plastic Pwr Transistor (2/Pkg)
404	160	429	Heat Sink-TO-66 Transistor
405	160	430	Heat Sink-TO-3 Transistor

Index/Product List (cont'd)

ECG No.	Page No.	Fig. No.	Description
407	160	437	IC Socket-8-Pin (2/Pkg)
408	160	438	IC Socket-10-Pin (2/Pkg)
409	160	439	IC Socket-Dual Inline, 14-Pin (2/Pkg)
410	160	431	Heat Sink-TO-1 Transistor (2/Pkg)
411	160	432	Heat Sink-Stud, TO-5 Transistor (2/Pkg)
412	160	433	Heat Sink-TO-18 Transistor (2/Pkg)
413	160	--	Transistor Insulator Kit-TO-3
414	160	--	Transistor Insulator Kit-TO-36
415	160	--	Transistor Insulator Kit-TO-66
416	160	440	IC Socket-Dual Inline, 16-Pin (2/Pkg)
417	160	441	Transistor Socket-3-Pin, TO-18 (2/Pkg)
418	160	442	Transistor Socket-4-Pin, TO-18 (2/Pkg)
419	160	443	Transistor Socket-3-Pin, TO-5 (2/Pkg)
420	160	444	Transistor Socket-4-Pin, TO-5 (2/Pkg)
421	160	445	Transistor Socket-TO-66, Pwr (2/Pkg)
422	160	--	Transistor Insulator Kit-Plastic TO-66
423	160	446	IC Socket-Mini-DIP, 8-Pin (2/Pkg)
424	160	--	Heat Sink Compound, 1 oz. Tube
425	--	--	24-Drawer Parts Cabinet
426	160	--	Metric Hardware Kit, 3 mm, Nuts, Bolts, etc.
427	160	434	TO-39 and TO-5 Heat Sink Kit, Heat Sink, 2 Bushings 1 Mica
428	160	447	24-Pin Integrated Circuit Socket (2/Pkg)
429	160	448	28-Pin Integrated Circuit Socket (2/Pkg)
451	27	19	JFET-N-Ch, UHF/VHF Amp
452	27	14	JFET-N-Ch, UHF/VHF Amp
453	27	46	JFET-N-Ch, VHF/FM Amp
454	27	14	MOSFET-Dual Gate, N-Ch, UHF/VHF Amp
456	27	14	JFET-N-Ch, Gen Purp Amp/Sw
457	27	19	JFET-N-Ch, Gen Purp Amp/Sw
459	27	14	JFET-N-Ch, AF Amp/Chopper/Sw
460	27	14	JFET-P-Ch, AF Amp
461	27	45	JFET-Matched Dual, N-Ch, DC Amp/Sampler/ Chopper
462	27	4	MOSFET-N-Ch, AF Amp
463	27	47	MOSFET-Dual, P-Ch, Enhancement, Sw/DC Amp
464	27	14	MOSFET-P-Ch, Enhancement, Sw
465	27	14	MOSFET-N-Ch, Enhancement, Sw
466	27	4	JFET-N-Ch, Chopper/Sw
467	27	19	JFET-N-Ch, Chopper/Fast Sw
500A	37	105	R-Tripler, Si, TV HiV, Replaces ECG500, 27" Anode Lead
501A	37	106	R-Tripler, Se-TV HiV, 33 kV (inc Foc Cap)
501B	37	117	R-Tripler, Si, TV HiV
502	35	80	R-Se-TV HiV, 12.4 k PRV
503	35	82	R-Se-TV HiV, 14.4 k PRV
504	35	83	R-Se-TV HiV, 19.5 k PRV
505	35	84	R-Se-TV HiV, 21.4 k PRV
506	33	89	R-Si-Hi Current/Fast Switch, Damp, Bst, Blank
507	33	89	R-Si-Hi Current/Fast Switch, Center, Gate
508/ R-3A3	35	81	R-Si-Replaces TV HiV Rect Tube
509/ R-3AT2	35	81	R-Si-Replaces TV HiV Rect Tube
510/ R-3DB3	35	81	R-Si-Replaces TV HiV Rect Tube
511/ R-2AV2	35	90	R-Si-Replaces TV Focus Rect Tube
512/ R-6DW4	35	91	R-Si-Replaces TV Damper Tube
513	34	88	R-Si-Stick, TV HiV, 45 k PIV
514/ R-3DS3	35	81	R-Si-Replaces TV HiV Rect Tube
515	33	86	D-Trace Commutating and Clamp Diode
516	33	85	D-Ge-Damper, 800 PRV
518	33	87	R-Si, Fast Switching, 8000 PRV
519	33	76	D-Si-Fast Switching, 4 nanosec, 100 PRV
520	37	107	R-Tripler, Se, TV HiV, plus Si Damper Diode
521	37	108	R-Tripler, Si, TV HiV
522	37	105	R-Tripler, Si, TV HiV
523	37	109	R-Tripler, Si, TV HiV
524	48	200	Varistor, Metal Oxide, 150 V RMS
525	33	89	D-Si-Damper, 2000 PRV
526A	37	110	R-Tripler, 5 Step
527	34	60	R-Si-Stick, TV HiV, 30 k PIV
528	37	111	R-Tripler, Si, TV HiV
529	37	110	R-Tripler, Si, TV HiV
530	37	110	R-Tripler, Si, TV HiV
531	37	112	R-Tripler, Si, TV HiV
532	37	112	R-Tripler, Si, TV HiV
533	37	112	R-Tripler, Si, TV HiV
534	37	113	R-Tripler, Si, TV HiV
535	37	114	R-Tripler, Si, TV HiV
536A	37	115	R-Quadrupler, Si, TV HiV
537	37	112	R-Tripler, Si, TV HiV
538	37	116	R-Tripler, Si, TV HiV
539	37	117	R-Tripler, Si, TV HiV
540	40	130	Microwave Oven Rect-12 kV, 600 mA
541	40	131	Microwave Oven Rect-10 kV, 750 mA
542	40	132	Microwave Oven Rect-15 kV, 350 mA
543	40	133	Microwave Oven Rect-15 kV, 350 mA
544	40	134	Microwave Oven Rect-12 kV, 500 mA
545	40	135	Microwave Oven Rect-12 kV, 400 mA
546	40	136	Microwave Oven Rect-12 kV, 400 mA
547	40	137	Microwave Oven Rect-12 kV, 400 mA
548	40	138	Microwave Oven Rect-12 kV, 400 mA
551	33	93	R-Si, 1500 PRV, 1 A
552	33	76	R-Si, 600 PRV, 1 A
600	34	66	Varistor-Si, 10 mA Forward Current
601	34	65	Varistor-Si, 20 mA Forward Current
604	34	66	Varistor-Ge, 100 mA Forward Current
605	34	67	Varistor-Si, 30 mA Forward Current
606	34	94	Varistor-Si, 150 mA Forward Current
607	34	94	Varistor-Si, 100 mA Forward Current
610	34	63	Varactor-6.8 pF at 4 V
611	34	63	Varactor-10.0 pF at 4 V
612	34	63	Varactor-12.0 pF at 4 V
613	34	63	Varactor-22.0 pF at 4 V
614	34	63	Varactor-33.0 pF at 4 V
703A	58	248	IC-RF/IF Amp
704	58	251	IC-TV Sound IF Amp, Det
705A	58	250	IC-Chroma Demod
706	58	317	IC-TV/FM IF Amp, Lim, Det, Dr
707	58	254	IC-Chroma Demod
708	58	314	IC-TV/FM Sound IF Amp, Det, Lim
709	58	314	IC-TV/FM Sound IF Amp, Det, Lim
710	59	317	IC-TV/FM IF Amp, Lim, Det, AF Dr
711	59	251	IC-Color TV AFT
712	59	314	IC-FM/TV Sound IF, Det, Vol Cntrl
713	59	314	IC-Chroma Demod
714	59	336	IC-Color Subcarrier Regen
715	59	314	IC-Chroma IF Amp
716	59	249	IC-AF Amp
717	59	318	IC-AF PO
718	59	314	IC-FM-Stereo Demod
719	59	314	IC-FM-Stereo Demod
720	59	314	IC-FM-Stereo Demod
721	59	314	IC-Dual Lo-Noise AF Preamp
722	60	314	IC-FM-Stereo Demod
723	60	314	IC-FM Rec Sound System
724	60	249	IC-Differential Cascade Amp
725	60	314	IC-Dual Lo-Noise Op Amp
726	60	254	IC-Wide-Band Amp
727	60	336	IC-4-AC Amp Array
728	60	337	IC-Chroma Sig Processor
729	60	336	IC-Chroma Demod
730	60	346	IC-TV Vid IF System
731	60	336	IC-TV Vid Sig Processor
735	60	275	IC-Class "A" AF Dr
736	60	276	IC-FM Gain Block
737	61	314	IC-FM Lim, Det
738	61	314	IC-Chroma IF Amp
739	61	314	IC-Chroma Demod, Dr
740A	61	319	IC-AF PO, 2 W
742	61	338	IC-TV Sound System, 2 W PO
743	61	336	IC-FM-Stereo Decoder
744	61	314	IC-AM Rad RF/IF Amp
745	61	277	IC-AF PO, 0.5 W
746	61	277	IC-FM/TV Sound IF Amp
747	61	277	IC-TV Vid Det
748	61	314	IC-TV Sound IF Amp, Lim, Det, AF Preamp
749	61	314	IC-TV Vid IF Amp
750	62	314	IC-FM 4-Stage, Hi-Gain IF Amp, Lim
752	62	262	IC-AF PO, 0.25 W
753	62	262	IC-Wide-Band Amp
754	62	262	IC-Single Toggle Flip-Flop
755	62	262	IC-Class "A" AF Dr
756	62	262	IC-VR, 9-35 V, 200 mA
757	62	262	IC-VR, 9-35 V, 200 mA
758	62	262	IC-VR, 9-20 V, 200 mA
759	62	262	IC-VR, 9-20 V, 200 mA
760	62	267	IC-FM IF Amp
761	62	267	IC-Dual Toggle Flip-Flop
762	62	267	IC-VR, 9-35 V, 200 mA
763	63	267	IC-VR, 9-35 V, 200 mA
764	63	267	IC-VR, 9-20 V, 200 mA
765	63	267	IC-VR, 9-20 V, 200 mA
766A	63	280	IC-Electronic Attenuator
767	63	267	IC-Dual Toggle Flip-Flop
768	63	267	IC-3-Input AND Gate
769	63	267	IC-AF PO, 1.0 W
770	63	267	IC-RS Flip-Flop
772A	63	279	IC-AF Class "B" Dr
773	63	278	IC-Differential Cascade Amp
775	63	278	IC-J-K Flip-Flop
776	64	278	IC-Zero Voltage Switch
778A	64	277	IC-Dual Op Amp, 8-Pin Mini-DIP
779-1	64	314	IC-TV Sig Processor
780	64	251	IC-TV AFC
781	64	249	IC-FM Hi-Gain IF Amp, Lim
782	64	314	IC-Chroma Demod
783	63	314	IC-TV AFC

Index/Product List (cont'd)

ECG No.	Page No.	Fig. No.	Description
784	64	258	IC-Wide-Band Pwr Amp
785	64	254	IC-Ultra Hi-Gain, Wide-Band 3-Amp Array
786	65	259	IC-FM IF Amp, Lim, Det, AF Preamp, Dr
787	65	336	IC-AM Recvr Subsystem
788	65	336	IC-FM IF System
789	65	337	IC-FM-Stereo Decoder
790	65	314	IC-Dual Chroma Demod
791	65	336	IC-Chroma Amp, Demod
792	65	335	IC-Horiz Processor
793	65	314	IC-Vert Countdown
794	65	335	IC-Vert Dr
795	65	276	IC-AGC Control and IF Amp
796	66	278	IC-Class "B" Audio Dr
797	66	337	IC-Chroma Processor
798	66	314	IC-Chroma Demod
799	66	314	IC-4-Channel "SQ" Stereo Decoder
801	66	314	IC-FM Stereo Demod, Phase Locked Loop
802	66	335	IC-4-Channel Electronic Attenuator
803	67	335	IC-4-Channel "SQ"-Logic F/B Enhancement
804	67	316	IC-Dual 2-Watt Audio Amp
805	67	276	IC-FM IF Gain Block
806	67	314	IC-FM IF Gain Block
807	67	338	IC-TV/FM Sound System, 1 W PO
808	--	--	IC-TV Vid Processor
809	--	--	IC-TV Chroma Control
810	--	--	IC-AF PO, 2 W
812	67	314	IC-AF PO
813	68	351	IC-CD4 Disc Demodulation System with Preamp
814	68	322	IC-4 Watt AF PO with Preamp
815	68	277	IC-TV Horiz Processor
816	68	254	IC-RF/IF Amp
817	68	276	IC-RF, IF Amp
818	68	336	IC-TV Luminance Processor
819	68	336	IC-Chroma Amp and Demod
820	68	336	IC-Horiz Osc and AGC
821	69	314	IC-Chroma Demod
822	--	--	IC-Auto Vid/Chroma Processor
823	69	277	IC-AF PO
824	69	277	IC-Dual AF Preamp
825	69	314	IC-AF PO, 1 W
826	69	343	IC-FM IF, AF PO, 2 W
830	69	314	IC-Horiz Processor/Vert Countdown
832	69	277	IC-Tone Decoder
833	70	277	IC-Timing Circuit
834	70	314	IC-Quad Comparator
900	70	254	IC-Balanced Diff Amp and DC Amp
901	70	258	IC-Video, Wide-Band Amp
903	70	258	IC-Op Amp
904	70	258	IC-2 Transistors and Darlington Pair
905	70	254	IC-Diode "Quad" Plus 2 Isolated Diodes
906	70	258	IC-Dual HF Diff Amps for Freq Up to 500 MHz
907	71	258	IC-6 Ultra-Fast Matched Diodes
908	71	314	IC-Op Amp
909	71	249	IC-Hi-Performance Op Amp, 8-Lead Can
909D	71	314	IC-Same as ECG909, 14-Lead DIP
910	71	249	IC-Hi-Speed Diff Comparator, 8-Lead Can
910D	71	314	IC-Same as ECG910, 14-Lead DIP
911	71	254	IC-Dual Hi-Speed Diff Comparator, 10-Lead Can
911D	71	314	IC-Same as ECG911, 14-Lead DIP
912	71	314	IC-3 Isolated Transistors, 1 Diff Pair
913	71	314	IC-Op Amp for Hi-Current App
914	71	314	IC-Zero Voltage Switch
915	72	254	IC-Hi-Speed Op Amp, 10-Lead Can
916	72	336	IC-Transistor Array for Digital Segment Displays
917	72	314	IC-Dual Diff Amp, Lo-Pwr App from DC to 120 MHz
923	72	253	IC-Precision VR, 10-Lead Can
923D	72	314	IC-Same as ECG923, 14-Lead DIP
925	72	249	IC-Instrumentation Op Amp, 8-Lead Can
940	72	249	IC-FET-Input Op Amp, 8-Lead Can
941	72	249	IC-Freq-Compensated Op Amp, 8-Lead Can
941D	72	314	IC-Same as ECG941, 14-Lead DIP
941M	72	276	IC-Same as ECG941, 8-Lead Mini-DIP
946	72	255	IC-Positive Pwr Supply Voltage Reg
947	72	254	IC-Dual, Freq-Compensated Op Amp, 10-Lead Can
947D	73	314	IC-Same as ECG947, 14-Lead DIP
949	73	249	IC-Dual Op Amp, 8-Lead Can
955M	73	277	IC-Timer/Oscillator
960	73	247	IC-POS Volt Reg, 5 V, 1 A
961	73	247	IC-NEG Volt Reg, 5 V, 1 A
962	73	247	IC-POS Volt Reg, 6 V, 1 A
963	63	247	IC-NEG Volt Reg, 6 V, 1 A
964	73	247	IC-Three Terminal POS Volt Reg, 8 V, 1 A
966	73	247	IC-POS Volt Reg, 12 V, 1 A
967	73	247	IC-NEG Volt Reg, 12 V, 1 A
968	73	247	IC-POS Volt Reg, 15 V, 1 A
969	73	247	IC-NEG Volt Reg, 15 V, 1 A
971	73	247	IC-NEG Volt Reg, 24 V, 1 A
972	73	247	IC-POS Volt Reg, 24 V, 1 A
973	73	254	IC-Balanced Modulator/Demodulator
973D	73	314	IC-Balanced Mod/Demod, 14-Pin DIP
974	73	314	IC-Phase/Frequency Detector
975	73	277	IC-Op Amp
976	74	276	IC-Op Amp
977	74	246	IC-Volt Reg, 5 V, 100 mA
978	74	314	IC-Dual Timing Circuit
979	74	314	IC-Zero Crossing Trigger
980	74	336	IC-Phase Locked Loop
981	74	246	IC-Volt Reg, 8 V, 100 mA
982	74	336	IC-Subcarrier Regen ACC, APC Detector
983	74	314	IC-Dual Audio Preamp
984	--	--	IC-Video IF, AFT
985	75	336	IC-Luminance Processor
986	75	349	IC-Chroma Processor and Demod
987	75	314	IC-Quad Op Amp
988	75	346	IC-VR 6.2 V, 100 mA
989	75	314	IC-PLL, Gen Purp
990	75	314	IC-Dual AF PO, 2 W
991	--	--	IC-Freq Synthesizer, CB
992	75	314	IC-4 Independent Amps
1000	75	271	Mod-Hybrid, Lo-Noise 12-Volt AF Preamp
1001	75	271	Mod-Hybrid, Lo-Noise 6-Volt AF Preamp
1002	76	249	IC-FM/TV IF Amp
1003	76	314	IC-FM/AM IF Amp
1004	76	315	IC-AFT System for TV
1005	76	314	IC-FM Stereo Demod
1006	76	314	IC-FM Stereo Demod
1007	76	260	IC-AF PO
1008	76	256	IC-1 W AF Amp
1009	76	282	IC-1 W AF Amp
1010	76	282	IC-2 W AF Amp
1011	76	282	IC-2.5 W AF Amp
1012	77	266	Mod-Hybrid, CB Osc/AM IF
1013	77	289	Mod-Hybrid, AM IF Amp/AF Preamp
1014	77	290	Mod-Hybrid, RF Amp/Osc of FM Wireless Mic
1015	77	288	Mod-Hybrid, Lo-Noise AF Preamp
1016	77	289	Mod-Hybrid, AF Preamp
1017	77	263	Mod-Hybrid, AF Amp for Wireless Mic
1018	77	313	Mod-Hybrid, Hor Osc/AFC
1019	77	289	Mod-Hybrid, Lo-Noise Audio Equalizing Amp
1020	77	289	Mod-Hybrid, Lo-Noise AF Amp
1021	77	289	Mod-Hybrid, Lo-Noise Audio Equalizing Amp
1022	77	335	IC-4-Channel Stereo Matrix Decoder
1023	77	321	IC-4 W Audio Amp
1024	78	306	Mod-Hybrid, 8 W Audio Amp
1025	78	304	Mod-Hybrid, 10 W Min Audio Amp
1026	78	289	Mod-Hybrid, Master Osc/Buffer for Organs
1027	78	306	Mod-Hybrid, 13 W Audio Amp
1028	78	305	Mod-Hybrid, 25 W Audio Amp
1029	78	294	IC-3.5 W Audio Amp
1030	78	294	IC-5 W Audio Amp
1031	78	309	IC-0.5 W Audio Amp
1032	78	309	IC-1 W Audio Amp
1033	78	309	IC-1 W Audio Amp
1034	78	309	IC-2 W Audio Amp
1035	79	309	IC-1 W Audio Amp
1036	79	309	IC-0.7 W Audio Amp
1037	79	294	IC-5.5 W Audio Amp
1038	--	--	IC-3.5 W Audio Amp
1039	79	276	IC-FM IF Amp
1040	79	285	Mod-FM IF Amp
1041	79	276	IC-IF Amp
1042	79	276	IC-3-Stage FM IF Amp
1043	80	314	IC-Audio Preamp and 1 W Audio Output
1045	80	314	IC-FM/TV Sound IF Detector/Amp
1046	80	314	IC-TV AFT
1047	80	314	IC-TV Sound IF/FM Det/AF Preamp
1048	80	327	IC-Chroma Demod
1049	80	335	IC-AM Radio Tuner with RF Amp
1050	80	327	IC-Chroma Demod
1051	81	314	IC-TV Sound IF/FM Det/AG Preamp
1052	81	270	Mod-Lo-Noise Audio Preamp and Equalizer
1053	81	252	IC-Lo-Noise/Hi-Gain Audio Preamp
1054	81	314	IC-AM/FM IF Amp
1055	81	314	IC-AM/FM IF Amp and AM Converter
1056	81	314	IC-FM Stereo Demod
1057	81	314	IC-FM IF Amp/Det/AF Preamp
1058	81	291	IC-Audio Preamp and 4.4 W Pwr Amp
1059	81	261	IC-AF Pwr Dr
1060	82	336	IC-AM RF Amp/Mxr/Osc and AM/FM IF Amp
1061	82	314	IC-TV AFT
1062	82	314	IC-Chroma Demod
1063	82	314	IC-Chroma Demod
1064	82	336	IC-TV Vid Sig Processor
1065	82	336	IC-TV Vid Sig Processor
1066	82	336	IC-TV Vid Sig Processor
1067	82	336	IC-Chroma Sig Processor
1068	82	336	IC-Chroma Demod
1069	82	314	IC-Chroma Processor
1070	82	336	IC-Vid Sig Processor
1071	83	336	IC-Chroma Demod
1072	83	336	IC-FM/AM IF Amp and Preamp
1073	83	336	IC-AM RF Amp/Mxr/Osc and FM/AM IF Amp
1074	83	314	IC-FM/AM IF Amp/AM Mxr/Osc and Tuning Master Dr

Index/Product List (cont'd)

ECG No.	Page No.	Fig. No.	Description
1075A	83	327	IC-1.0 W Audio Amp
1076	83	314	IC-TV Vid IF, Output Det, AFT, Take-Off Ckt
1077	83	314	IC-Vert Osc, AFC/Vert Dr
1078	83	330	IC-6.5 W Audio Amp
1079	84	314	IC-Vert Osc/Dr
1080	84	314	IC-TV Vid Processor
1081A	84	300	IC-4.5 W Audio Amp
1082	84	270	Mod-AF Equalizer and Preamp
1083	84	342	Mod-Hybrid, Dual Hi-Gain Audio Preamp
1084	84	335	IC-Vid Output, ARC, Brightness Lim, DC Contrast Cntrl
1085	84	269	IC-Lo-Noise Audio Preamp
1086	84	335	IC-TV Sync Sep/Hor Osc/AFC
1087	85	269	Mod-Gen Purp Lo-Noise/Hi-Gain Audio Preamp
1088	--	--	IC-1.5 W Audio Amp
1089	85	347	IC-Chroma Sig Processor
1090	85	305	Mod-Hybrid, 25 W Audio Amp
1091	85	335	IC-1st Vid Amp/Inv, AGC Gate/Amp, Color Take-Off
1092	85	270	Mod-RF/IF Amp to 150 MHz
1093	85	327	IC-Audio Preamp/1 W Pwr Output
1094	85	314	IC-TV Chroma Amp
1095	85	324	IC-Audio Preamp/Dr/1 W Pwr Output
1096	86	324	IC-TV AFT
1097	86	324	IC-1 W Audio Amp Plus 2 Transistors
1098	86	257	IC-5 W Audio Amp
1099	86	314	IC-Chroma Demod
1100	86	269	Mod-FM IF Amp
1101	86	269	Mod-Gen Purp Amp, DC to 100 MHz
1102	86	264	Mod-3-Stage Audio Amp/Dr
1103	86	269	Mod-Gen Purp Audio Preamp/Voltage Amp
1104	86	264	Mod-Hi-Freq Amp to 100 MHz
1105	87	335	IC-Subcarrier Regen/APC/Killer/Bst Amp/Det
1106	87	335	IC-FM Stereo Demod
1107	77	321	IC-4.8 W Audio Amp
1108	87	314	IC-AM/FM IF Amp/Det/AF Amp
1109	87	315	IC-Lo-Level Vid Det
1110	87	339	IC-Audio Preamp/Tone Amp/2 W Pwr Output
1111	87	331	IC-4 W Audio Amp
1112	87	314	IC-2.2 W Audio Amp
1113	87	318	IC-2.1 W Audio Amp
1114	88	331	IC-4.5 W Audio Amp
1115	88	310	IC-7 W Audio Amp
1115A	88	311	IC-7 W Audio Amp
1116	88	311	IC-5 W Audio Amp
1117	88	317	IC-2 W Audio Amp
1118	88	331	IC-3.3 W Audio Amp
1119	88	271	Mod-Hybrid, 2-Stage Audio Amp/Dr
1120	88	271	Mod-Hybrid, Audio Dr
1121	88	336	IC-Chroma Sync System
1122	88	314	IC-Chroma Demod
1123	89	336	IC-TV Reference Combination
1124	89	335	IC-AM/FM IF Amp
1125	--	--	IC-Replacement for AN216
1126	89	324	IC-1 W Audio Amp
1127	89	300	IC-4.5 W Audio Amp
1128	89	269	IC-TV Vid IF
1129	89	329	IC-Vert Defl System
1130	89	335	IC-Chroma Demod/Matrix Hue Cntrl
1131	89	335	IC-Chroma/Sig Amp/Processor
1132	90	335	IC-Chroma Subcarrier Regen
1133	90	335	IC-TV Sound IF/Det
1134	90	335	IC-TV Vid Processor
1135	90	268	IC-Hi-Gain Audio Preamp
1136	90	314	IC-Battery Protect Ckt
1137	90	252	IC-1.3 W Audio Amp
1139	90	304	Mod-Audio 13 W Min Pwr Amp
1140	90	283	IC-2.0 W Audio Amp
1141	91	283	IC-AF PO, 1.5 W
1142	91	314	IC-FM Multiplex Stereo Demodulator
1148	91	305	Mod-AF PO, 50 W
1149	91	315	IC-FM Tuning System and Indicator
1150	91	282	IC-AF PO, 2.5 W
1152	91	313	Mod-AF Preamp, Hi-Gain
1153	91	298	IC-AF PO, 4.2 W
1154	91	320	IC-AF PO, 2-Channel, 2 W/Channel
1155	92	298	IC-AF PO, 5.8 W
1156	92	340	IC-AF PO, 2 W
1158	92	336	IC-Chroma Processor
1159	92	336	IC-Color Demodulator
1160	92	300	IC-AF PO, 5.2 W
1161	92	351	IC-Video and Sound IF Combination
1162	92	314	IC-IF, Detector and Audio Preamp
1163	92	336	IC-TV Color Demodulator
1164	93	336	IC-TV Video Sig Processing Circuit
1165	93	298	IC-Modulator/Audio Output, Stereo and CB
1166	93	298	IC-Modulator/Audio Output, Stereo and CB
1167	93	336	IC-CMOS PLL (Frequency Synthesizer)
1168	93	336	IC-Video Processor
1169	93	303	IC-Audio Output/Modulator
1170	93	284	IC-Audio Preamp
1171	93	249	IC-Microphone Amp

ECG No.	Page No.	Fig. No.	Description
1172	94	314	IC-Phase Frequency Detector for PLL
1173	94	335	IC-TV Video IF Amp and AGC
1174	94	317	IC-TV Automatic Fine Tuning
1175	94	337	IC-TV Sound IF and AF Output Subsystem
1176	94	336	IC-TV Chroma Demodulator
1177	94	314	IC-TV Luminance Processor
1178	94	314	IC-Chroma Demodulator
1179	94	276	IC-Audio Preamp
1180	94	326	IC-Audio Pwr Output, 1.5 W
1181	95	336	IC-MPX Decoder
1182	95	336	IC-Chrominance Sig Processor
1183	95	314	IC-Chroma Demodulator
1184	95	336	IC-Audio Preamp
1185	95	300	IC-Audio Preamp
1186	95	314	IC-Vid IF and AGC
1187	95	276	IC-Vid Det/Amp
1188	95	254	IC-Noise Amp
1189	--	--	IC-Color Processor
1190	--	--	IC-Horiz Osc Dr and Vert Dr
1191	96	349	IC-Chrominance Sig Processor
1192	96	292	IC-Volt Controlled Osc and Mxr, CB
1193	96	312	IC-4.5 W Audio Output
1194	96	297	IC-5.8 W Audio Output, CB
1195	96	270	IC-Lo-Noise Audio Preamp
1196	96	349	IC-Chroma Processor and Demodulator
1197	97	292	IC-Freq Divider and Amp
1200	97	335	IC-TV Chroma Processor
1201	97	307	IC-CB Volt Controlled Osc
1202	97	307	IC-CB Volt Controlled Osc
1203	97	307	IC-CB Volt Controlled Osc
1204	97	307	IC-Volt Controlled Osc
1205	97	335	IC-Tape Recorder Preamp
1206	97	315	IC-PLL Stereo Decoder
1207	98	335	IC-CMOS Programmable Divider
1208	98	292	IC-CMOS Phase Comparator
1209	98	276	IC-4-Bit Binary Counter
1210	98	293	IC-Audio Preamp
1211	98	296	IC-5.5 W Audio Out Auto and CB
1212	98	341	IC-2-Channel AF Pwr Amp, 9.5 W/Channel
1213	98	315	IC-TV Video IF Amp
1214	98	336	IC-AM Tuner, RF Conv, IF, Det, AGC
1215	98	336	IC-Stereo Equalizer Amp
1216	98	336	IC-Chroma Demodulator
1217	99	336	IC-PLL FM Stereo Decoder
1218	99	332	IC-2-Channel AF Pwr Amp, 7 W/Channel
1219	99	334	IC-2-Channel AF Pwr Amp, 15 W/Channel
1220	99	333	IC-2-Channel AF Pwr Amp, 6 W/Channel
1221	99	314	IC-Stereo Preamp
1222	99	320	IC-AF Pwr Amp, 4.2 W
1223	99	272	IC-Lo-Noise Preamp
1224	99	336	IC-AF Pwr Amp, 1.55 W
1225	100	336	IC-FM Stereo Demodulator
1226	100	314	IC-FM Stereo Multiplex Demodulator
1227	100	276	IC-FM IF Amp
1228	94	326	IC-AF Pwr Amp, 2.1 W
1229	100	314	IC-TV Vert Defl and Pincushion Correction
1230	100	336	IC-FM Stereo Multiplex Demodulator
1231	100	311	IC-TV Sound IF and Audio Output
1232	101	265	IC-AF Pwr Amp, 8 W
1233	101	336	IC-PLL
1234	101	269	IC-FM IF and TV Sound IF Amp
1235	101	269	IC-Squelch Amp
1236	--	--	IC-FM IF and TV Sound IF Amp
1237	101	315	IC-AM Radio Without Audio
1238	102	309	IC-2 W Audio Pwr Amp
1239	102	302	IC-Audio Output and CB Mod
1240	102	308	IC-5.5 W Audio Output and CB Mod
1241	102	268	IC-Head Coil and Meter Dr
1242	102	336	IC-AM/FM IF and AM Converter
1243	102	315	IC-FM Stereo Multiplex Decoder
1244	103	287	IC-Audio Output
1245	103	300	IC-Vert Defl
1246	103	327	IC-TV Sound IF, Det AF PO
1247	103	307	IC-Voltage Controlled Osc
1248	103	335	IC-FM Stereo Demod
1249	103	272	IC-Balanced Modulator
1250	104	336	IC-TV AFT
1251	104	283	IC-VR with Filter, 13.1 V
1252	104	341	IC-Dual Channel AF PO, 15 W/Channel
1253	104	348	IC-PLL Freq Synthesizer, CB
1254	105	349	IC-PLL Freq Synthesizer, CB
1255	105	355	IC-PLL Freq Synthesizer, CB
1256	105	299	IC-AF PO, 5.8 W
1257	105	327	IC-FM IF, Det, AF PO
1258	105	328	IC-Vert Hold, Osc, Output
1259	105	295	IC-AF PO, 6.5 W
1260	105	302	IC-AF PO, 5.5 W
1261	105	303	IC-AF PO, 5.5 W
1262	105	307	IC-Voltage Controlled Osc, CB
1263	105	335	IC-Record/Playback Ckt, VCR
1264	106	336	IC-Luminance Ckt, VCR
1265	106	345	IC-Noise Suppression Ckt, VCR

Index/Product List (cont'd)

ECG No.	Page No.	Fig. No.	Description
1266	106	336	IC-Chroma Processor, VCR
1267	106	336	IC-Dropout Compensator, VCR
1268	106	351	IC-DC Servo Control, VCR
1269	106	351	IC-Color Processor, VCR
1270	--	349	IC-Motor Drive for VCR
1271	107	352	IC-Control Voltage Generator
1272	107	353	IC-PLL Freq Synthesizer
1273	107	354	IC-Dual Channel Audio Pwr Amp
1274	90	304	IC-Mod-Audio 15 W Min Pwr Amp
1300	107	286	IC-TV Remote Control
1301	107	274	IC-AM/FM IF
1302	108	273	IC-Dual Op Amp
1303	108	323	IC-AF Pwr Output
1304	108	350	IC-Chroma Processor
1305	108	350	IC-Color Demodulator
1306	108	350	IC-Video IF
1307	108	350	IC-Chroma Processor
1308	108	324	IC-TV Sound IF, Det
1309	108	273	IC-FM IF
1310	108	325	IC-FM/AM IF, AGC
1311	109	344	IC-Noise Cancelling Amp
1312	109	314	IC-Vert Osc, Amp
1313	109	323	IC-Horiz Osc, Amp
2000	--	--	IC-Dolby Circuit
2001	--	--	IC-Dolby Circuit
2002	--	--	IC-Dolby Circuit
2003	--	--	IC-Dolby Circuit
2004	--	--	IC-Dolby Circuit
2011	156	C1	IC-7 Channel MOS/TTL Input Driver
2012	156	C1	IC-7 Channel PMOS Input Driver
2013	156	C1	IC-7 Channel CMOS/TTL Input Driver
2014	156	C1	IC-7 Channel CMOS/PMOS Input Driver
2015	156	C1	IC-7 Channel CMOS/TTL Input Driver
2016	156	C2	IC-8 Channel MOS/TTL Input Driver
2017	156	C2	IC-8 Channel PMOS Input Driver
2018	156	C2	IC-8 Channel CMOS/TTL Input Driver
2019	156	C2	IC-8 Channel CMOS/PMOS Input Driver
2020	156	C2	IC-8 Channel CMOS/TTL Input Driver
2021	156	C3	IC-8 Digit/Segment Display Driver
2022	156	C3	IC-8 Digit/Segment Display Driver
2023	156	C4	IC-7 Segment Display Driver
2024	156	C5	IC-2 Digit BCD-to-7 Segment Decoder Driver
2040	157	C6	IC-7 Stage Freq Divider
3000	49	210	LED Indicator, Low Profile, Red/Clear
3001	49	210	LED Indicator, Low Profile, Red/Flooded
3002	49	210	LED Indicator, Low Profile, Yellow/Clear
3003	49	210	LED Indicator, Low Profile, Green/Clear
3004	49	210	LED Indicator, Low Profile, Red
3005	51	211	Infrared Emitting Diode
3006	51	220	Infrared Emitting Diode
3007	49	212	LED General Purpose Indicator, Red
3008	49	212	LED General Purpose Indicator, Bright Red
3009	49	212	LED General Purpose Indicator, Orange
3010	49	212	LED General Purpose Indicator, Green
3011	49	212	LED General Purpose Indicator, Yellow
3012	49	213	LED Panel Indicator, Red Diffused
3013	49	214	LED Panel Indicator, Red Jewel
3014	49	213	LED Panel Indicator, Green Diffused
3015	49	214	LED Panel Indicator, Green Jewel
3016	49	215	LED Panel Indicator, Dual Color, Red or Green
3018	49	216	LED Indicator, Red, 90° Viewing Angle
3019	49	216	LED Indicator, Red, 60° Viewing Angle
3020	49	217	LED Panel Indicator, Red/Flooded
3021	49	217	LED Panel Indicator, Yellow
3022	49	217	LED Panel Indicator, Bright Red
3023	49	217	LED Panel Indicator, Orange
3024	49	217	LED Panel Indicator, Green
3025	49	218	LED Panel Indicator, Red
3026	49	219	LED Panel Indicator, Dual Color, Red or Green
3027	51	221	Infrared Emitting Diode
3028	51	222	Infrared Emitting Diode
3029	51	223	Infrared Emitting Diode
3031	51	224	NPN, Si, Phototransistor/IR Detector
3032	51	225	NPN, Si, Phototransistor/IR Detector
3034	51	226	NPN, Si, Phototransistor/Light Detector
3035	51	227	NPN, Si, Photo Darlington/Light Detector
3036	51	228	NPN, Si, Photo Darlington/Light Detector
3037	51	229	NPN, Si, Phototransistor/Light Detector
3038	51	230	NPN, Si, Phototransistor/Light Detector
3040	53	231	Optoisolator/Phototransistor
3041	53	231	Optoisolator/Phototransistor
3042	53	231	Optoisolator/Phototransistor
3042	53	231	Optoisolator/Phototransistor
3044	53	231	Optoisolator/Photo Darlington
3045	53	231	Optoisolator/Photo Darlington
3046	53	231	Optoisolator/Photo-SCR
3047	53	231	Optoisolator/Photo-TRIAC
3050	54	232	.270" Red 7-Segment Numeric LED Display
3051	54	233	.270" Red Overflow & Polarity LED Display
3052	54	234	.3" Red 7-Segment Numeric LED Display
3053	54	234	.3" Orange 7-Segment Numeric LED Display
3054	54	234	.3" Green 7-Segment Numeric LED Display
3055	54	234	.3" Yellow 7-Segment Numeric LED Display
3056	54	234	.3" Red 7-Segment Numeric LED Display
3058	54	234	.3" Orange 7-Segment Numeric LED Display
3059	54	234	.3" Green 7-Segment Numeric LED Display
3060	54	234	.3" Yellow 7-Segment Numeric LED Display
3061	54	235	.3" Red 7-Segment Numeric LED Display
3062	54	235	.3" Orange 7-Segment Numeric LED Display
3063	54	235	.3" Green 7-Segment Numeric LED Display
3064	54	235	.3" Yellow 7-Segment Numeric LED Display
3065	54	236	.3" Red Polarity & Overflow LED Display
3068	54	237	.4" Red 7-Segment Numeric LED Display
3069	54	238	.4" Red 7-Segment Numeric LED Display
3070	54	237	.4" Orange 7-Segment Numeric LED Display
3071	54	238	.4" Orange 7-Segment Numeric LED Display
3074	54	239	.560" Red Two-Digit 7-Segment Numeric LED Display
3075	54	239	.560" Red Two-Digit 7-Segment Numeric LED Display
3076	54	240	.560" Red 1-1/2 Digit Numeric LED Display
3077	54	240	.560" Red 1-1/2 Digit Numeric LED Display
3078	54	241	.560" Red 7-Segment Numeric LED Display
3079	54	241	.560" Red 7-Segment Numeric LED Display
3080	54	242	.8" Red 7-Segment Numeric LED Display Com Anode
4000	120	355	IC-CMOS Dual 3-Input NOR Gate Plus Inverter
4001B	120	355	IC-CMOS Quad 2-Input NOR Gate
4002B	120	355	IC-CMOS Dual 4-Input NOR Gate
4006B	120	355	IC-CMOS 18-Stage Static Shift Register
4007B	120	355	IC-CMOS Dual Complementary Pair with Inverter
4008B	120	356	IC-CMOS 4-Bit Full Adder
4011B	120	355	IC-CMOS Quad 2-Input NAND Gate
4012B	120	355	IC-CMOS Dual 4-Input NAND Gate
4013B	120	355	IC-CMOS Dual "D" Flip-Flop with Set/Reset
4014B	121	356	IC-CMOS 8-Stage Static Shift Register
4015B	121	356	IC-CMOS Dual 4-Stage Static Shift Register
4016B	121	355	IC-CMOS Quad Bilateral Switch
4017B	121	356	IC-CMOS Decade Counter/Divider
4018B	121	356	IC-CMOS Presettable Divide-By-"N" Counter
4019B	121	356	IC-CMOS Quad AND/OR Select Gate
4020B	121	356	IC-CMOS 14-Stage Binary/Ripple Counter
4021B	121	356	IC-CMOS 8-Stage Serial to Parallel Shift Register
4022B	122	356	IC-CMOS Counter/Divider
4023B	122	355	IC-CMOS Triple 3-Input NAND Gate
4024B	122	355	IC-CMOS 7-Stage Binary Counter
4025B	122	355	IC-CMOS Triple 3-Input NOR Gate
4027B	122	356	IC-CMOS Dual J-K M/S Flip-Flop
4028B	122	356	IC-CMOS BCD-to-Decimal Decoder
4029B	122	356	IC-CMOS Presettable Up/Down Counter
4030B	122	355	IC-CMOS Quad Exclusive OR Gate
4034B	123	357	IC-CMOS 8-Stage Static BiDirectional Parallel/ Serial Input/Output Bus Register
4035B	123	356	IC-CMOS 4-Stage Parallel In/Parallel Out Shift Register
4040B	123	356	IC-CMOS 12-Stage Binary/Ripple Counter
4042B	123	356	IC-CMOS Quad-Clocked "D" Latch
4043B	123	356	IC-CMOS Quad 3-State R/S Latch
4044B	123	356	IC-CMOS Quad 3-State R/S Latch
4049B	123	356	IC-CMOS Hex Buffer/Converter (Inverting)
4050B	123	356	IC-CMOS Hex Buffer/Converter (Non-Inverting)
4051B	123	356	IC-CMOS Single 8-Channel Multiplexer
4052B	124	356	IC-CMOS Differential 4-Channel Multiplexer
4053B	124	356	IC-CMOS Analog Multiplexer Demultiplexer
4055B	124	356	IC-CMOS BCD-7 Segment Decoder/Driver
4060B	124	356	IC-CMOS 14-Stage Ripple/Carry Binary Counter/ Divider and Oscillator
4063B	124	356	IC-CMOS 4-Bit Magnitude Comparator
4066B	124	355	IC-CMOS Quad Bilateral Switch
4068B	124	355	IC-CMOS 8-Input NAND Gate
4069	124	355	IC-CMOS Hex Inverter
4071B	125	355	IC-CMOS Quad 2-Input OR Gate
4072B	125	355	IC-CMOS OR Gate
4073B	125	355	IC-CMOS AND Gate
4075B	125	355	IC-CMOS OR Gate
4076B	125	356	IC-CMOS 4-Bit "D Type" Register
4077B	125	355	IC-CMOS Quad Exclusive NOR Gate
4078B	125	355	IC-CMOS 8-Input NOR Gate
4081B	125	355	IC-CMOS 2-Input AND Gate
4082B	125	355	IC-CMOS AND Gate
4085B	125	355	IC-CMOS Dual 2-Wide 2-Input AND/OR Invert Gate
4086B	126	355	IC-CMOS Expandable 4-Wide 2-Input AND/OR Invert Gate
4093B	126	355	IC-CMOS Quad 2-Input NAND Schmitt Trigger
4098B	126	356	IC-CMOS Dual Monostable Multivibrator
4099B	126	356	IC-CMOS 8-Bit Addressable Latch
4510B	126	356	IC-CMOS Presettable Up/Down Counter
4511B	126	356	IC-CMOS BCD-to-7 Segment Latch Decoder Driver
4512B	126	356	IC-CMOS 8-Input Multiplexer with 3-Stage Output
4514B	126	357	IC-CMOS 4-Bit Latch/4-to-16-Line Decoder
4515B	126	357	IC-CMOS 4-Bit Latch/4-to-16-Line Decoder
4516B	127	356	IC-CMOS Presettable Up/Down Counter
4518B	127	356	IC-CMOS Dual BCD Up Counter
4520B	127	356	IC-CMOS Dual Binary Up Counter

Index/Product List (cont'd)

ECG No.	Page No.	Fig. No.	Description
4522B	127	356	IC-CMOS BCD-Programmable Divide-By-"N", 4-Bit Counter
4527B	127	356	IC-CMOS BCD Multiplier
4539B	127	356	IC-CMOS Dual 4-Channel Digital Mxr
4555B	127	356	IC-CMOS Dual Binary to 1-of-4 Decoder/ Demultiplexer (High-on-Select)
4556B	127	356	IC-CMOS Dual Binary to 1-of-4 Decoder/ Demultiplexer (Low-on-Select)
5000A thru 5060A	42	155	ZD-2.4 thru 200.0 V, 0.5 W
5061A thru 5105A	42	155	ZD-2.4 thru 200.0 V, 1 W
5111A thru 5166A	42	156	ZD-3.3 thru 200.0 V, 5 W
5172A thru 5232A	42	157	ZD-3.3 thru 200.0 V, 10 W
5172AK thru 5232AK	42	157	ZD-3.3 thru 200.0 V, 10 W, Cathode Connected to Stud
5240A thru 5296A	42	158	ZD-3.9 thru 200.0 V, 50 W
5240AK thru 5296AK	42	158	ZD-3.9 thru 200.0 V, 50 W, Cathode Connected to Stud
5304	34	62	R-Si-Bridge, 400 PRV, 1.5 A
5305	34	62	R-Si-Bridge, 600 PRV, 1.5 A
5306	34	62	R-Si-Bridge, 800 PRV, 1.5 A
5307	34	62	R-Si-Bridge, 1000 PRV, 1.5 A
5312	34	61	R-Si-Bridge, 100 PRV, 8 A
5313	34	61	R-Si-Bridge, 200 PRV, 8 A
5314	34	61	R-Si-Bridge, 400 PRV, 8 A
5315	34	61	R-Si-Bridge, 600 PRV, 8 A
5316	34	61	R-Si-Bridge, 800 PRV, 8 A
5322	34	92	R-Si-Bridge, 200 PRV, 25 A
5324	34	92	R-Si-Bridge, 400 PRV, 25 A
5326	34	92	R-Si-Bridge, 600 PRV, 25 A
5400	43	168	SCR-30 VRM, 0.8 A
5401	43	168	SCR-60 VRM, 0.8 A
5402	43	168	SCR-100 VRM, 0.8 A
5403	43	168	SCR-150 VRM, 0.8 A
5404	43	168	SCR-200 VRM, 0.8 A
5405	43	168	SCR-400 VRM, 0.8 A
5406	43	168	SCR-600 VRM, 0.8 A
5411	43	169	SCR-30 VRM, 4.0 A
5412	43	169	SCR-60 VRM, 4.0 A
5413	43	169	SCR-100 VRM, 4.0 A
5414	43	169	SCR-200 VRM, 4.0 A
5415	43	169	SCR-400 VRM, 4.0 A
5416	43	169	SCR-600 VRM, 4.0 A
5421	43	170	SCR-30 VRM, 4.0 A
5422	43	170	SCR-60 VRM, 4.0 A
5423	43	170	SCR-100 VRM, 4.0 A
5431	43	170	SCR-30 VRM, 4.0 A
5432	43	170	SCR-60 VRM, 4.0 A
5433	43	170	SCR-100 VRM, 4.0 A
5442	43	170	SCR-50 VRM, 8.0 A
5444	43	170	SCR-200 VRM, 8.0 A
5446	43	170	SCR-400 VRM, 8.0 A
5448	43	170	SCR-600 VRM, 8.0 A
5452	43	171	SCR-30 VRM, 4.0 A
5453	43	171	SCR-50 VRM, 4.0 A
5454	43	171	SCR-100 VRM, 4.0 A
5455	43	171	SCR-200 VRM, 4.0 A
5456	43	171	SCR-300 VRM, 4.0 A
5457	43	171	SCR-400 VRM, 4.0 A
5461	43	174	SCR-50 VRM, 8.0 A
5462	43	174	SCR-100 VRM, 8.0 A
5463	43	174	SCR-200 VRM, 8.0 A
5465	43	174	SCR-400 VRM, 8.0 A
5466	43	174	SCR-600 VRM, 8.0 A
5470	43	172	SCR-50 VRM, 5.0 A
5471	43	172	SCR-100 VRM, 5.0 A
5472	43	172	SCR-200 VRM, 5.0 A
5473	43	172	SCR-300 VRM, 5.0 A
5474	43	172	SCR-400 VRM, 5.0 A
5475	43	172	SCR-500 VRM, 5.0 A
5476	43	172	SCR-600 VRM, 5.0 A
5480	43	172	SCR-25 VRM, 8.0 A
5481	43	172	SCR-50 VRM, 8.0 A
5482	43	172	SCR-100 VRM, 8.0 A
5483	43	172	SCR-200 VRM, 8.0 A
5484	43	172	SCR-300 VRM, 8.0 A
5485	43	172	SCR-400 VRM, 8.0 A
5486	43	172	SCR-500 VRM, 8.0 A
5487	43	172	SCR-600 VRM, 8.0 A
5491	43	175	SCR-100 VRM, 10 A
5492	43	175	SCR-200 VRM, 10 A
5494	43	175	SCR-400 VRM, 10 A
5496	43	175	SCR-600 VRM, 10 A
5500	43	175	SCR-25 VRM, 16 A
5501	43	175	SCR-50 VRM, 16 A
5502	43	175	SCR-100 VRM, 16 A
5503	43	175	SCR-150 VRM, 16 A
5504	43	175	SCR-200 VRM, 16 A
5505	43	175	SCR-250 VRM, 16 A
5506	43	175	SCR-300 VRM, 16 A
5507	43	175	SCR-400 VRM, 16 A
5508	43	175	SCR-500 VRM, 16 A
5511	43	173	SCR-200 VRM, 5.0 A
5512	43	173	SCR-400 VRM, 5.0 A
5513	43	173	SCR-600 VRM, 5.0 A
5514	43	176	SCR-200 VRM, 20 A
5515	43	176	SCR-400 VRM, 20 A
5516	43	176	SCR-600 VRM, 20 A
5517	43	176	SCR-200 VRM, 35 A
5518	43	176	SCR-400 VRM, 35 A
5519	43	176	SCR-600 VRM, 35 A
5520	43	175	SCR-25 VRM, 25 A
5521	43	175	SCR-50 VRM, 25 A
5522	43	175	SCR-100 VRM, 25 A
5523	43	175	SCR-150 VRM, 25 A
5524	43	175	SCR-200 VRM, 25 A
5525	43	175	SCR-250 VRM, 25 A
5526	43	175	SCR-300 VRM, 25 A
5527	43	175	SCR-400 VRM, 25 A
5528	43	175	SCR-500 VRM, 25 A
5529	43	175	SCR-600 VRM, 25 A
5530	43	175	SCR-700 VRM, 25 A
5531	43	175	SCR-800 VRM, 25 A
5540	43	175	SCR-25 VRM, 35 A
5541	43	175	SCR-50 VRM, 35 A
5542	43	175	SCR-100 VRM, 35 A
5543	43	175	SCR-200 VRM, 35 A
5544	43	175	SCR-300 VRM, 35 A
5545	43	175	SCR-400 VRM, 35 A
5546	43	175	SCR-500 VRM, 35 A
5547	43	175	SCR-600 VRM, 35 A
5550	43	174	SCR-50 VRM, 25 A
5552	43	174	SCR-200 VRM, 25 A
5554	43	174	SCR-400 VRM, 25 A
5556	43	174	SCR-600 VRM, 25 A
5558	43	174	SCR-800 VRM, 25 A
5562	43	177	SCR-200 VRM, 35 A
5564	43	177	SCR-400 VRM, 35 A
5566	43	177	SCR-600 VRM, 35 A
5600	45	181	TRIAC-25 VRM, 4 A
5601	45	181	TRIAC-50 VRM, 4 A
5602	45	181	TRIAC-100 VRM, 4 A
5603	45	181	TRIAC-200 VRM, 4 A
5604	45	181	TRIAC-300 VRM, 4 A
5605	45	181	TRIAC-400 VRM, 4 A
5606	45	181	TRIAC-500 VRM, 4 A
5607	45	181	TRIAC-600 VRM, 4 A
5611	45	182	TRIAC-25 VRM, 10 A
5612	45	182	TRIAC-50 VRM, 10 A
5613	45	182	TRIAC-100 VRM, 10 A
5614	45	182	TRIAC-200 VRM, 10 A
5615	45	182	TRIAC-300 VRM, 10 A
5616	45	182	TRIAC-400 VRM, 10 A
5617	45	182	TRIAC-500 VRM, 10 A
5618	45	182	TRIAC-600 VRM, 10 A
5621	45	182	TRIAC-25 VRM, 10 A
5622	45	182	TRIAC-50 VRM, 10 A
5623	45	182	TRIAC-100 VRM, 10 A
5624	45	182	TRIAC-200 VRM, 10 A
5625	45	182	TRIAC-300 VRM, 10 A
5626	45	182	TRIAC-400 VRM, 10 A
5627	45	182	TRIAC-500 VRM, 10 A
5628	45	182	TRIAC-600 VRM, 10 A
5631	45	183	TRIAC-50 VRM, 10 A
5632	45	183	TRIAC-100 VRM, 10 A
5633	45	183	TRIAC-200 VRM, 10 A
5634	45	183	TRIAC-300 VRM, 10 A
5635	45	183	TRIAC-400 VRM, 10 A
5636	45	183	TRIAC-500 VRM, 10 A
5640	45	180	TRIAC-100 VRM, 2.5 A
5641	45	180	TRIAC-200 VRM, 2.5 A
5642	45	180	TRIAC-400 VRM, 2.5 A
5643	45	180	TRIAC-600 VRM, 2.5 A
5650	45	180	TRIAC-100 VRM, 2.5 A
5651	45	180	TRIAC-200 VRM, 2.5 A
5652	45	180	TRIAC-400 VRM, 2.5 A
5660	45	184	TRIAC-25 VRM, 10 A
5661	45	184	TRIAC-50 VRM, 10 A
5662	45	184	TRIAC-100 VRM, 10 A
5663	45	184	TRIAC-200 VRM, 10 A
5664	45	184	TRIAC-300 VRM, 10 A
5665	45	184	TRIAC-400 VRM, 10 A
5666	45	184	TRIAC-500 VRM, 10 A
5667	45	184	TRIAC-600 VRM, 10 A
5673	45	185	TRIAC-200 VRM, 15 A
5675	45	185	TRIAC-400 VRM, 15 A
5676	45	185	TRIAC-500 VRM, 15 A
5677	45	185	TRIAC-600 VRM, 15 A

Index/Product List (cont'd)

ECG No.	Page No.	Fig. No.	Description
5680	45	185	TRIAC-25 VRM, 25 A
5681	45	185	TRIAC-50 VRM, 25 A
5682	45	185	TRIAC-100 VRM, 25 A
5683	45	185	TRIAC-200 VRM, 25 A
5684	45	185	TRIAC-300 VRM, 25 A
5685	45	185	TRIAC-400 VRM, 25 A
5686	45	185	TRIAC-500 VRM, 25 A
5693	45	185	TRIAC-200 VRM, 40 A
5695	45	185	TRIAC-400 VRM, 40 A
5697	45	185	TRIAC-600 VRM, 40 A
5800	41	145	R-50 PRV, 3 A, Axial Lead
5801	41	145	R-100 PRV, 3 A, Axial Lead
5802	41	145	R-200 PRV, 3 A, Axial Lead
5803	41	145	R-300 PRV, 3 A, Axial Lead
5804	41	145	R-400 PRV, 3 A, Axial Lead
5805	41	145	R-500 PRV, 3 A, Axial Lead
5806	41	145	R-600 PRV, 3 A, Axial Lead
5808	41	145	R-800 PRV, 3 A, Axial Lead
5809	41	145	R-1000 PRV, 3 A, Axial Lead
5812	41	150	R-100 PRV, 6 A/22 A, Axial Lead
5814	41	150	R-400 PRV, 6 A/22 A, Axial Lead
5815	41	150	R-600 PRV, 6 A/22 A, Axial Lead
5817	41	150	R-1000 PRV, 6 A/22 A, Axial Lead
5830	41	148	R-50 PRV, 3 A, Cath Case
5831	41	148	R-50 PRV, 3 A, Anode Case
5832	41	148	R-100 PRV, 3 A, Cath Case
5833	41	148	R-100 PRV, 3 A, Anode Case
5834	41	148	R-200 PRV, 3 A, Cath Case
5835	41	148	R-200 PRV, 3 A, Anode Case
5836	41	148	R-300 PRV, 3 A, Cath Case
5837	41	148	R-300 PRV, 3 A, Anode Case
5838	41	148	R-400 PRV, 3 A, Cath Case
5839	41	148	R-400 PRV, 3 A, Anode Case
5840	41	148	R-500 PRV, 3 A, Cath Case
5841	41	148	R-500 PRV, 3 A, Anode Case
5842	41	148	R-600 PRV, 3 A, Cath Case
5843	41	148	R-600 PRV, 3 A, Anode Case
5846	41	148	R-800 PRV, 3 A, Cath Case
5847	41	148	R-800 PRV, 3 A, Anode Case
5848	41	148	R-1000 PRV, 3 A, Cath Case
5849	41	148	R-1000 PRV, 3 A, Anode Case
5850	41	148	R-50 PRV, 6 A, Cath Case
5851	41	148	R-50 PRV, 6 A, Anode Case
5852	41	148	R-100 PRV, 6 A, Cath Case
5853	41	148	R-100 PRV, 6 A, Anode Case
5854	41	148	R-200 PRV, 6 A, Cath Case
5855	41	148	R-200 PRV, 6 A, Anode Case
5856	41	148	R-300 PRV, 6 A, Cath Case
5857	41	148	R-300 PRV, 6 A, Anode Case
5858	41	148	R-400 PRV, 6 A, Cath Case
5859	41	148	R-400 PRV, 6 A, Anode Case
5860	41	148	R-500 PRV, 6 A, Cath Case
5861	41	148	R-500 PRV, 6 A, Anode Case
5862	41	148	R-600 PRV, 6 A, Cath Case
5863	41	148	R-600 PRV, 6 A, Anode Case
5866	41	148	R-800 PRV, 6 A, Cath Case
5867	41	148	R-800 PRV, 6 A, Anode Case
5868	41	148	R-1000 PRV, 6 A, Cath Case
5869	41	148	R-1000 PRV, 6 A, Anode Case
5870	41	146	R-50 PRV, 12 A, Cath Case
5871	41	146	R-50 PRV, 12 A, Anode Case
5872	41	146	R-100 PRV, 12 A, Cath Case
5873	41	146	R-100 PRV, 12 A, Anode Case
5874	41	146	R-200 PRV, 12 A, Cath Case
5875	41	146	R-200 PRV, 12 A, Anode Case
5876	41	146	R-300 PRV, 12 A, Cath Case
5877	41	146	R-300 PRV, 12 A, Anode Case
5878	41	146	R-400 PRV, 12 A, Cath Case
5879	41	146	R-400 PRV, 12 A, Anode Case
5880	41	146	R-500 PRV, 12 A, Cath Case
5881	41	146	R-500 PRV, 12 A, Anode Case
5882	41	146	R-600 PRV, 12 A, Cath Case
5883	41	146	R-600 PRV, 12 A, Anode Case
5886	41	146	R-800 PRV, 12 A, Cath Case
5887	41	146	R-800 PRV, 12 A, Anode Case
5890	41	146	R-1000 PRV, 12 A, Cath Case
5891	41	146	R-1000 PRV, 12 A, Anode Case
5892	41	146	R-50 PRV, 16 A, Cath Case
5893	41	146	R-50 PRV, 16 A, Anode Case
5894	41	146	R-100 PRV, 16 A, Cath Case
5895	41	146	R-100 PRV, 16 A, Anode Case
5896	41	146	R-200 PRV, 16 A, Cath Case
5897	41	146	R-200 PRV, 16 A, Anode Case
5898	41	146	R-300 PRV, 16 A, Cath Case
5899	41	146	R-300 PRV, 16 A, Anode Case
5900	41	146	R-400 PRV, 16 A, Cath Case
5901	41	146	R-400 PRV, 16 A, Anode Case
5902	41	146	R-500 PRV, 16 A, Cath Case
5903	41	146	R-500 PRV, 16 A, Anode Case
5904	41	146	R-600 PRV, 16 A, Cath Case
5905	41	146	R-600 PRV, 16 A, Anode Case
5908	41	146	R-800 PRV, 16 A, Cath Case
5909	41	146	R-800 PRV, 16 A, Anode Case
5910	41	146	R-1000 PRV, 16 A, Cath Case
5911	41	146	R-1000 PRV, 16 A, Anode Case
5912	41	146	R-50 PRV, 20 A, Cath Case
5913	41	146	R-50 PRV, 20 A, Anode Case
5914	41	146	R-100 PRV, 20 A, Cath Case
5915	41	146	R-100 PRV, 20 A, Anode Case
5916	41	146	R-200 PRV, 20 A, Cath Case
5917	41	146	R-200 PRV, 20 A, Anode Case
5918	41	146	R-300 PRV, 20 A, Cath Case
5919	41	146	R-300 PRV, 20 A, Anode Case
5920	41	146	R-400 PRV, 20 A, Cath Case
5921	41	146	R-400 PRV, 20 A, Anode Case
5922	41	146	R-500 PRV, 20 A, Cath Case
5923	41	146	R-500 PRV, 20 A, Anode Case
5924	41	146	R-600 PRV, 20 A, Cath Case
5925	41	146	R-600 PRV, 20 A, Anode Case
5928	41	146	R-800 PRV, 20 A, Cath Case
5929	41	146	R-800 PRV, 20 A, Anode Case
5932	41	146	R-1000 PRV, 20 A, Cath Case
5933	41	146	R-1000 PRV, 20 A, Anode Case
5940	41	147	R-50 PRV, 15 A, Cath Case
5941	41	147	R-50 PRV, 15 A, Anode Case
5942	41	147	R-100 PRV, 15 A, Cath Case
5943	41	147	R-100 PRV, 15 A, Anode Case
5944	41	147	R-200 PRV, 15 A, Cath Case
5945	41	147	R-200 PRV, 15 A, Anode Case
5946	41	147	R-300 PRV, 15 A, Cath Case
5947	41	147	R-300 PRV, 15 A, Anode Case
5948	41	147	R-400 PRV, 15 A, Cath Case
5949	41	147	R-400 PRV, 15 A, Anode Case
5950	41	147	R-500 PRV, 15 A, Cath Case
5951	41	147	R-500 PRV, 15 A, Anode Case
5952	41	147	R-600 PRV, 15 A, Cath Case
5953	41	147	R-600 PRV, 15 A, Anode Case
5980	41	147	R-50 PRV, 40 A, Cath Case
5981	41	147	R-50 PRV, 40 A, Anode Case
5982	41	147	R-100 PRV, 40 A, Cath Case
5983	41	147	R-100 PRV, 40 A, Anode Case
5986	41	147	R-200 PRV, 40 A, Cath Case
5987	41	147	R-200 PRV, 40 A, Anode Case
5988	41	147	R-300 PRV, 40 A, Cath Case
5989	41	147	R-300 PRV, 40 A, Anode Case
5990	41	147	R-400 PRV, 40 A, Cath Case
5991	41	147	R-400 PRV, 40 A, Anode Case
5992	41	147	R-500 PRV, 40 A, Cath Case
5993	41	147	R-500 PRV, 40 A, Anode Case
5994	41	147	R-600 PRV, 40 A, Cath Case
5995	41	147	R-600 PRV, 40 A, Anode Case
5998	41	147	R-800 PRV, 40 A, Cath Case
5999	41	147	R-800 PRV, 40 A, Anode Case
6002	41	147	R-1000 PRV, 40 A, Cath Case
6003	41	147	R-1000 PRV, 40 A, Anode Case
6020	41	147	R-50 PRV, 60 A, Cath Case
6021	41	147	R-50 PRV, 60 A, Anode Case
6022	41	147	R-100 PRV, 60 A, Cath Case
6023	41	147	R-100 PRV, 60 A, Anode Case
6026	41	147	R-200 PRV, 60 A, Cath Case
6027	41	147	R-200 PRV, 60 A, Anode Case
6030	41	147	R-300 PRV, 60 A, Cath Case
6031	41	147	R-300 PRV, 60 A, Anode Case
6034	41	147	R-400 PRV, 60 A, Cath Case
6035	41	147	R-400 PRV, 60 A, Anode Case
6038	41	147	R-500 PRV, 60 A, Cath Case
6039	41	147	R-500 PRV, 60 A, Anode Case
6040	41	147	R-600 PRV, 60 A, Cath Case
6041	41	147	R-600 PRV, 60 A, Anode Case
6042	41	147	R-800 PRV, 60 A, Cath Case
6043	41	147	R-800 PRV, 60 A, Anode Case
6044	41	147	R-1000 PRV, 60 A, Cath Case
6045	41	147	R-1000 PRV, 60 A, Anode Case
6050	41	147	R-100 PRV, 70 A, Cath Case
6051	41	147	R-100 PRV, 70 A, Anode Case
6054	41	147	R-200 PRV, 70 A, Cath Case
6055	41	147	R-200 PRV, 70 A, Anode Case
6058	41	147	R-300 PRV, 70 A, Cath Case
6059	41	147	R-300 PRV, 70 A, Anode Case
6060	41	147	R-400 PRV, 70 A, Cath Case
6061	41	147	R-400 PRV, 70 A, Anode Case
6064	41	147	R-600 PRV, 70 A, Cath Case
6065	41	147	R-600 PRV, 70 A, Anode Case
6068	41	147	R-800 PRV, 70 A, Cath Case
6069	41	147	R-800 PRV, 70 A, Anode Case
6072	41	147	R-1000 PRV, 70 A, Cath Case
6073	41	147	R-1000 PRV, 70 A, Anode Case
6154	41	148	R-400 PRV, 150 A, Cath Case
6155	41	148	R-400 PRV, 150 A, Anode Case
6156	41	148	R-600 PRV, 150 A, Cath Case
6157	41	148	R-600 PRV, 150 A, Anode Case
6158	41	148	R-1000 PRV, 150 A, Cath Case

Index/Product List (cont'd)

ECG No.	Page No.	Fig. No.	Description
6159	41	148	R-1000 PRV, 150 A, Anode Case
6354	41	149	R-400 PRV, 300 A, Cath Case
6355	41	149	R-400 PRV, 300 A, Anode Case
6356	41	149	R-600 PRV, 300 A, Cath Case
6357	41	149	R-600 PRV, 300 A, Anode Case
6358	41	149	R-1000 PRV, 300 A, Cath Case
6359	41	149	R-1000 PRV, 300 A, Anode Case
6400	47	191	T-Unijunction, Si
6401	47	192	T-Unijunction, Si
6402	47	193	T-Programmable Unijunction, Si
6403	47	194	Bilateral Switch, Si-1.0 A, 300 mW
6404	47	195	Unilateral Switch, Si-1.0 A, 300 mW
6405	47	196	Asymmetrical Switch, Si-500 mA, 350 mW
6406	48	198	D-Bilateral Trigger-2 A, 150 mW, 20 V (BR)F
6407	48	198	D-Bilateral Trigger-2 A, 150 mW, 28 V (BR)F
6408	48	198	D-Bilateral Trigger-2 A, 150 mW, 32 V (BR)F
6409	47	192	T-Unijunction, Si
7400	133	L1	IC-TTL Quad 2-Input Pos NAND Gate
7401	133	L2	IC-TTL Quad 2-Input Pos NAND Gate with Open Collector Output
7402	133	L4	IC-TTL Quad 2-Input Pos NOR Gate
7403	133	L5	IC-TTL Quad 2-Input Pos NAND Gate with Open Collector Output
7404	133	L6	IC-TTL Hex Inverter
7405	133	L6	IC-TTL Hex Inverter with Open Collector Output
7406	133	L6	IC-TTL Hex Inverter Buffer/Driver with Open Collector High Voltage Output (30 V)
7407	133	L7	IC-TTL Hex Buffer/Driver with Open Collector High Voltage Output (30 V)
7408	133	L8	IC-TTL Quad 2-Input Pos AND Gate
7409	133	L8	IC-TTL Quad 2-Input Pos AND Gate with Open Collector Output
7410	133	L9	IC-TTL Triple 3-Input Pos NAND Gate
7411	133	L10	IC-TTL Triple 3-Input Pos AND Gate
7412	133	L11	IC-TTL Triple 3-Input Pos NAND Gate with Open Collector Output
7413	133	L12	IC-TTL Dual NAND Schmitt Trigger
7414	134	L13	IC-TTL Hex Schmitt Trigger
7416	134	L15	IC-TTL Hex Inverter Buffer/Driver with Open Collector High Voltage Output (15 V)
7417	134	L16	IC-TTL Hex Buffer/Driver with Open Collector High Voltage Output (15 V)
7420	134	L17	IC-TTL Dual 4-Input Pos NAND Gate
7421	134	L18	IC-TTL Dual 4-Input AND Gate
7422	134	L19	IC-TTL Dual 4-Input Pos NAND Gate
7423	134	L20	IC-TTL Expandable Dual 4-Input Pos NOR Gate with Strobe
7425	134	L21	IC-TTL Dual 4-Input NOR Gate with Strobe
7426	134	L22	IC-TTL Quad 2-Input High Voltage Interface NAND Gate
7427	134	L23	IC-TTL Triple 3-Input Pos NOR Gate
7428	134	L24	IC-TTL Quad 2-Input Pos NOR Buffer/Clock Driver with Totem Pole Output
7430	134	L25	IC-TTL 8-Input Pos NAND Gate
7432	134	L26	IC-TTL Quad 2-Input Pos OR Gate
7433	134	L27	IC-TTL Quad 2-Input Pos NOR Buffer with Open Collector Output
7437	135	L28	IC-TTL Quad 2-Input Pos NAND Buffer
7438	135	L28	IC-TTL Quad 2-Input Pos NAND Buffer with Open Collector Output
7439	135	L29	IC-TTL Quad 2-Input NAND Buffer with Open Collector Output
7440	135	L30	IC-TTL Dual 4-Input Pos NAND Buffer
7441	135	L31	IC-TTL 1-of-10 Decoder Driver for Cold Cathode Indicator Tubes
7442	135	L32	IC-TTL 4-Line-to-10-Line Decoder (1-of-10) BCD-to-Decimal
7443	135	L32	IC-TTL 4-Line-to-10-Line Decoder (1-of-10) Excess 3-to-Decimal
7444	135	L32	IC-TTL 4-Line-to-10-Line Decoder (1-of-10) Excess 3-Gray-to-Decimal
7445	135	L32	IC-TTL BCD-to-Decimal Decoder/Driver (30 V)
7446	135	L33	IC-TTL BCD-to-Seven-Segment Decoder/Driver (30 V)
7447	135	L33	IC-TTL BCD-to-Seven-Segment Decoder/Driver (15 V)
7448	135	L33	IC-TTL BCD-to-Seven-Segment Decoder/Driver
7450	135	L34	IC-TTL Expandable Dual 2-Wide 2-Input AND/OR Invert Gate
7451	135	L35	IC-TTL Expandable Dual 2-Wide 2-Input AND/OR Invert Gate
7453	135	L39	IC-TTL Expandable 4-Wide 2-Input AND/OR Invert Gate
7454	135	L41	IC-TTL Expandable 4-Wide 2-Input AND/OR Invert Gate
7460	136	L44	IC-TTL Dual 4-Input Expander
7470	136	L48	IC-TTL J-K Edge Triggered Flip-Flop with Preset and Clear
7472	136	L50	IC-TTL J-K M/S Flip-Flop with Preset and Clear
7473	136	L51	IC-TTL Dual J-K M/S Flip-Flop
7474	136	L52	IC-TTL Dual "D Type" Edge Triggered Flip-Flop
7475	136	L53	IC-TTL 4-Bit Bistable Latch
7476	136	L54	IC-TTL Dual J-K M/S Flip-Flop with Preset and Clear
7480	136	L56	IC-TTL Gated Full Adder
7481	136	L57	IC-TTL 16-Bit (16x1) RAM
7482	137	L58	IC-TTL 2-Bit Binary Full Adder
7483	137	L59	IC-TTL 4-Bit Binary Full Adder
7485	137	L60	IC-TTL 4-Bit Magnitude Comparator
7486	137	L61	IC-TTL Quad 2-Input Exclusive OR Gate
7488A	137	L63	IC-TTL 256-Bit Read-Only Memory
7489	137	L64	IC-TTL 64-Bit Read/Write Memory
7490	137	L65	IC-TTL Decade Counter (÷2; ÷5)
7491	137	L66	IC-TTL 8-Bit Shift Register
7492	137	L67	IC-TTL Divide-by-Twelve Counter (÷2; ÷6)
7493A	137	L68	IC-TTL 4-Bit Binary Counter
7494	137	L69	IC-TTL 4-Bit Shift Register
7495	138	L70	IC-TTL 4-Bit Right-Shift Left-Shift Register
7496	138	L71	IC-TTL 5-Bit Shift Register
7497	138	L72	IC-TTL 6-Bit Binary Multiplier (Synchronous Rate Multiplier)
9093	145	370	IC-DTL Dual M/S J-K Flip-Flop (5 MHz)
9094	145	370	IC-DTL Dual M/S J-K Flip-Flop (8 MHz)
9097	145	370	IC-DTL Dual M/S J-K Flip-Flop (8 MHz)
9099	145	370	IC-DTL Dual M/S J-K Flip-Flop (5 MHz)
9109	145	370	IC-DTL High Voltage Hex Inverter
9110	145	370	IC-DTL High Voltage Hex Inverter
9111	145	370	IC-DTL RS Flip-Flop
9112	145	370	IC-DTL High Voltage Hex Inverter
9135	145	370	IC-DTL Hex Inverter
9157	145	370	IC-DTL Quad Buffer
9158	145	370	IC-DTL Quad Pwr Gate
9200	159	410	IC-I^2L Freq Divider for VCR
9400	159	411	IC-Pulse Processor for VCR
9401	159	411	IC-Monostable Multivibrator for VCR
9660	149	375	IC-HTL Expandable Dual 4-Input NAND Gate (Active Pullup)
9661	149	375	IC-HTL Expandable 4-Input NAND Gate (Passive Pullup)
9662	149	375	IC-HTL Expandable 4-Input Line NAND Driver (Active Pullup)
9663	149	375	IC-HTL Dual J-K Flip-Flop
9664	149	375	IC-HTL M/S R-S Flip-Flop
9665	149	375	IC-HTL Triple Level Translator tp = 40 ns Typ
9666	149	375	IC-HTL Triple Level Translator tp = 75 ns Typ
9667	149	375	IC-HTL Dual Monostable Multivibrator
9668	150	375	IC-HTL Quad 2-Input NAND Gate (Passive Pullup)
9669	150	375	IC-HTL Dual 4-Input Expander
9670	150	375	IC-HTL Triple 3-Input NAND Gate (Passive Pullup)
9671	150	375	IC-HTL Triple 3-Input NAND Gate (Active Pullup)
9672	150	375	IC-HTL Quad 2-Input NAND Gate (Active Pullup)
9673	150	375	IC-HTL Dual 2-Input AND/OR Invert Gate (Active Pullup)
9674	150	375	IC-HTL Dual 2-Input AND/OR Invert Gate (Passive Pullup)
9675	150	375	IC-HTL Dual Pulse Stretcher
9676	150	376	IC-HTL BCD-to-Decimal Decoder Driver
9677	150	376	IC-HTL Hex Inverter with Strobe (Active Pullup)
9678	150	376	IC-HTL Hex Inverter with Strobe (Without Output Resistors)
9679	150	375	IC-HTL Dual Lamp/Line Driver
9680	151	375	IC-HTL Hex Inverter (Active Pullup)
9681	151	375	IC-HTL Hex Inverter (Open Collector)
9682	151	376	IC-HTL Quad Latch
9683	151	375	IC-HTL Quad 2-Input Exclusive OR Gate
9684	151	376	IC-HTL Decade Counter
9685	151	376	IC-HTL Binary Counter
9686	151	376	IC-HTL 4-Bit Shift Register
9688	151	376	IC-HTL Dual J-K Flip-Flop
9689	151	375	IC-HTL Hex Inverter (High Voltage)
9690	151	375	IC-HTL Hex Inverter (Active Pullup)
9691	151	375	IC-HTL Hex Inverter/Interface Element
9696	151	376	IC-HTL Dual Interface Element, Line Driver/Receiver
9800	146	370	IC-DTL Dual 5-Input NAND Gate (6 Kohm-Pullup)
9801	146	370	IC-DTL Dual 5-Input NAND Gate (2 Kohm-Pullup)
9802	146	370	IC-DTL 8-Input NAND Gate (6 Kohm-Pullup)
9803	146	370	IC-DTL 8-Input NAND Gate (2 Kohm-Pullup)
9804	146	370	IC-DTL 10-Input NAND Gate (6 Kohm-Pullup)
9805	146	370	IC-DTL 10-Input NAND Gate (2 Kohm-Pullup)
9806	146	370	IC-DTL Quad 2-Input AND Gate (6 Kohm-Pullup)
9807	146	370	IC-DTL Quad 2-Input AND Gate (2 Kohm-Pullup)
9808	146	370	IC-DTL Quad 2-Input OR Gate (6 Kohm-Pullup)
9809	146	370	IC-DTL Quad 2-Input OR Gate (2 Kohm-Pullup)
9810	146	370	IC-DTL Quad 2-Input NOR Gate (6 Kohm-Pullup)
9811	146	370	IC-DTL Quad 2-Input NOR Gate (2 Kohm-Pullup)
9812	146	370	IC-DTL Quad 2-Input Exclusive OR Gate
9813	146	371	IC-DTL Quad Latch with Complementary Outputs
9814	146	370	IC-DTL Quad Latch
9900	153	380	IC-RTL Buffer-Medium Pwr
9903	153	380	IC-RTL 3-Input NOR Gate-Medium Pwr
9904	153	380	IC-RTL Half Adder-Medium Pwr
9905	153	380	IC-RTL Half-Shift Register-Medium Pwr
9906	153	380	IC-RTL Half-Shift Register W I/O-Inverter-Medium Pwr

Index/Product List (cont'd)

ECG No.	Page No.	Fig. No.	Description
9907	153	380	IC-RTL 4-Input NOR Gate-Medium Pwr
9908	153	380	IC-RTL Adder and Exclusive OR-Low Pwr
9909	153	380	IC-RTL Buffer-Low Pwr
9910	153	380	IC-TRL Dual 2-Input NOR Gate-Low Pwr
9911	153	380	IC-RTL 4-Input NOR Gate and Inverter-Low Pwr
9912	153	380	IC-RTL Half Adder-Low Pwr
9913	153	380	IC-RTL Type "D" Flip-Flop-Low Pwr
9914	154	380	IC-RTL Dual 2-Input NOR Gate-Medium Pwr
9915	154	381	IC-RTL Dual 3-Input NOR Gate-Medium Pwr
9917	154	382	IC-RTL Quad 2-Input NOR Gate-Low Pwr
9921	154	380	IC-RTL Gate Expander-Low Pwr
9923	154	380	IC-RTL J-K Flip-Flop-Medium Pwr
9924	154	382	IC-RTL Quad 2-Input NOR Gate-Medium Pwr
9926	154	381	IC-RTL J-K Flip-Flop-Medium Pwr
9927	154	381	IC-RTL Quad Inverter-Medium Pwr
9930	147	370	IC-DTL Dual 4-Input Extendable NAND Gate
9931	147	370	IC-DTL RS Clocked Flip-Flop
9932	147	370	IC-DTL Dual 4-Input Extendable NAND Buffer Gate
9933	147	370	IC-DTL Dual 4-Input Extender
9935	147	370	IC-DTL Extendable Hex Inverter
9936	147	370	IC-DTL Hex Inverter
9937	147	370	IC-DTL Hex Inverter
9941	147	370	IC-DTL Monostable Multivibrator (Input Clamp Diodes)
9944	147	370	IC-DTL Dual 4-Input Extendable NAND Buffer Gate (Open Collector)
9945	147	370	IC-DTL Clocked Flip-Flop
9946	147	370	IC-DTL Quad 2-Input NAND Gate
9948	148	370	IC-DTL Clocked Flip-Flop (Fast)
9949	148	370	IC-DTL Quad 2-Input NAND Gate (Fast)
9950	148	370	IC-DTL AC Coupled RS-Flip-Flop
9951	148	370	IC-DTL Monostable Multivibrator
9961	148	370	IC-DTL Dual 4-Input Extendable NAND Gate (Fast)
9962	148	370	IC-DTL Triple 3-Input NAND Gate
9963	148	370	IC-DTL Triple 3-Input NAND Gate (Fast)
9974	154	380	IC-RTL J-K Flip-Flop
9976	154	382	IC-RTL Lo Pwr Dual J-K Flip-Flop
9989	154	380	IC-RTL Medium Pwr Hex Inverter
40085B	127	356	IC-CMOS 4-Bit Magnitude Comparator
40097B	128	356	IC-CMOS Hex 3-State Non-Inverting Buffer
40098B	128	356	IC-CMOS Hex 3-State Inverting Buffer
40100B	128	356	IC-CMOS 32-State Static Left/Right Shift Register
40106B	128	355	IC-CMOS Hex Schmitt Trigger
40160B	128	356	IC-CMOS 4-Bit Decade Asynchronous Reset Counter
40161B	128	356	IC-CMOS 4-Bit Binary Asynchronous Reset Counter
40162B	128	356	IC-CMOS 4-Bit Decade Synchronous Reset Counter
40163B	128	356	IC-CMOS 4-Bit Binary Synchronous Reset Counter
40174B	128	356	IC-CMOS Hex "D" Flip-Flop
40175B	129	356	IC-CMOS Quad "D" Flip-Flop
40182B	129	356	IC-CMOS Look-Ahead Carry Generator
40192B	129	356	IC-CMOS 4-Bit Up/Down Synchronous Decade Counter
40193B	129	356	IC-CMOS 4-Bit Up/Down Synchronous Binary Counter
40194B	129	356	IC-CMOS 4-Bit Right/Left Shift Register
40195B	129	356	IC-CMOS 4-Bit Shift Rigister
56004	45	183	TRIAC-200 VRM, 15 A
56006	45	183	TRIAC-400 VRM, 15 A
56008	45	183	TRIAC-600 VRM, 15 A
56010	45	183	TRIAC-800 VRM, 15 A
56014	45	186	TRIAC-400 VRM, 25 A
56022	45	187	TRIAC-200 VRM, 40 A
56024	45	187	TRIAC-400 VRM, 40 A
56026	45	187	TRIAC-600 VRM, 60 A
74107	138	L77	IC-TTL Dual J-K M/S Flip-Flop with Clear
74109	138	L79	IC-TTL Dual J-K Pos Edge Triggered Flip-Flop with Clear and Preset
74110	138	L80	IC-TTL Gated J-K M/S Flip-Flop with Clear and Preset
74111	138	L81	IC-TTL Dual J-K M/S Flip-Flop with Clear and Preset
74121	139	L85	IC-TTL Monostable Multivibrators
74122	139	L86	IC-TTL Retriggerable Monostable Multivibrators with Clear and Internal Timing Resistor
74123	139	L87	IC-TTL Dual Retriggerable Monostable Multivibrators with Clear
74125	139	L89	IC-TTL Quad Buffer with 3-State Outputs Hi Disable
74126	139	L90	IC-TTL Quad Buffer with 3-State Outputs Lo Disable
74128	139	L91	IC-TTL Dual 4-Input Pos NAND 50/75 Ohm Line Drive
74132	139	L92	IC-TTL Schmitt Trigger Pos NAND Gate with Inverter with Totem Pole Output
74141	140	L98	IC-TTL BCD-to-Decimal Decoder/Driver-Drives Gas Filled Cold Cathode Indicator Tubes Directly
74145	140	L99	IC-TTL BCD-to-Decimal Decoder/Driver
74150	140	L100	IC-TTL Data Selector/Multiplexer-Inverted Outputs
74151	140	L101	IC-TTL Data Selector/Multiplexer-Complementary Outputs
74152	140	L102	IC-TTL Data Selector/Multiplexer
74153	140	L103	IC-TTL Dual 4-Line-to-1-Line Data Selector/Multiplexer
74154	140	L104	IC-TTL 4-Line-to-16-Line Decoder/Multiplexer
74155	140	L105	IC-TTL Dual 2-Line-to-4-Line Decoder/Demultiplexer Totem Pole Outputs
74156	140	L105	IC-TTL Dual 2-Line-to-4-Line Decoder/Demultiplexer Open Collector Output
74160	141	L107	IC-TTL Synchronous Decade Counter with Direct Clear
74161	141	L107	IC-TTL Synchronous Binary Counter with Direct Clear
74162	141	L107	IC-TTL Decade Counter with Synchronous Clear
74163	141	L107	IC-TTL Binary Counter with Synchronous Clear
74164	141	L108	IC-TTL 8-Bit Parallel-Out Serial Shift Register
74165	141	L109	IC-TTL Parallel-Load 8-Bit Shift Register
74166	141	L110	IC-TTL 8-Bit Parallel or Serial In-Serial Out Shift Register
74170	141	L111	IC-TTL 4-by-4 Register File
74174	141	L113	IC-TTL Hex "D Type" Flip-Flop with Clear and Single Rail Outputs
74175	141	L114	IC-TTL Quad "D Type" Flip-Flop with Clear and Double Rail Outputs
74176	141	L115	IC-TTL Decade Counter (Can be connected in BCD, ÷2, ÷5, or Biquinary Mode)
74177	141	L115	IC-TTL, 4-Bit Binary Counter (Can be connected as ÷2, ÷8, or ÷16 Counter)
74178	141	L116	IC-TTL 4-Bit Shift Register with Serial and Parallel Data Entry
74179	141	L117	IC-TTL 4-Bit Shift Register with Serial and Parallel Data Entry Plus Direct Reset (RD) and a D (Out) Line
74180	142	L118	IC-TTL 8-Bit Odd/Even Parity Generator/Checker
74181	142	L119	IC-TTL Arithmetic Logic Unit/Function Generator
74182	142	L120	IC-TTL Look-Ahead Carry Generator
74190	142	L122	IC-TTL BCD-Synchronous Up/Down Counter with Up/Down Mode Control
74191	142	L122	IC-TTL 4-Bit Binary Synchronous Up/Down Counter with Up/Down Mode Control
74192	142	L123	IC-TTL Synchronous Up/Down Decade Counter-Dual Clock with Clear
74193	142	L123	IC-TTL Synchronous Up/Down 4-Bit Binary Counter-Dual Clock with Clear
74195	142	L125	IC-TTL 4-Bit Parallel Access Shift Register
74196	142	L126	IC-TTL 50 MHz Presettable Decade Counter and Latch (Can provide ÷2 and ÷5 Counter)
74197	142	L126	IC-TTL 50 MHz Presettable Binary Counter and Latch (Can provide ÷2 and ÷8 Counter)
74198	142	L127	IC-TTL 8-Bit Right-Left Shift Register (Parallel Inputs-Parallel Outputs)
74199	142	L127	IC-TTL Synchronous 8-Bit Register
75450B	157	C7	IC-Dual Peripheral AND Driver
75451B	157	C8	IC-Dual Peripheral AND Driver
75452B	157	C8	IC-Dual Peripheral NAND Driver
75453B	157	C8	IC-Dual Peripheral OR Driver
75454B	157	C8	IC-Dual Peripheral NOR Driver
75491B	157	C9	IC-4 Segment MOS to LED Anode Driver
75492B	157	C10	IC-6 Digit MOS to LED Cathode Driver
75493	157	C11	IC-4 Segment MOS to LED Anode Driver
75494	157	C12	IC-6 Digit MOS to LED Cathode Driver
75497	157	C13	IC-7 Digit MOS to LED Cathode Driver
75498	157	C14	IC-9 Digit MOS to LED Cathode Driver

Transistors

Bi-Polar Types

Maximum Ratings At 25° C Ambient Unless Otherwise Noted

PNP NPN

ECG Type	Description and Application	Collector To Base Volts BV_{CBO}	Collector To Emitter Volts BV_{CEO}	Base to Emitter Volts BV_{EBO}	Max. Collector Current I_C Amps	Max. Collector Diss. P_D Watts	Freq. in MHz f_t	Typical Current Gain h_{FE}	Package and Basing	
									Case	Fig. No.
ECG100	PNP-Ge, RF/IF Amp, Osc, Mix, AM Radio	25	20 (CER)	20	.300	.150	5 #	40 at 455 KHz	TO-5	1
ECG101	NPN-Ge, RF/IF Amp, Osc, Mix, AM Radio	25	20 (CER)	20	.300	.150	5 #	40 at 455 KHz	TO-5	1
ECG102	PNP-Ge, AF Driver, Pre-Amp, Pwr Output (Compl to ECG103)	30	16 (CER)	20	.300	.150	2	90	TO-5	1
ECG102A	PNP-Ge, AF Driver, Pre-Amp, Pwr Output (Compl to ECG103A)	32	32 (CES)	12	.500	.900	2.3	120	TO-1	12
ECG103	NPN-Ge, AF Driver, Pre-Amp, Pwr Output (Compl to ECG102)	30	16 (CER)	20	.250	.150	2 #	90 at 1 KHz	TO-5	1
ECG103A	NPN-Ge, AF Driver, Pre-Amp, Pwr Output (Compl to ECG102A)	32	32 (CES)	10	.500	.340	2.5	105	TO-1	12
ECG104 ECG104MP*	PNP-Ge, AF Pwr Output	50	35 (CER)	20	7	90	10 KHz #	90	TO-3	2
ECG105	PNP-Ge, AF Pwr Output	50	35 (CER)	20	15	100	10 KHz #	90	TO-36	3
ECG106	PNP-Si, RF/IF Amp, Osc, Mix, FM	35	15	1	75 mA	.250	500	20 min	TO-18	4
ECG107	NPN-Si, UHF/VHF Amp, Osc, Mix, IF Amp	30	15	5	50 mA	.250	800	60	TO-92	19
ECG108	NPN-Si, RF/IF/Video Amp, Osc, Mix, VHF/UHF	30	15	2	50 mA	.600	800	20 min	TO-92	19
ECG121 ECG121MP*	PNP-Ge, AF Pwr Output Stereo, Hi-Fi	65	45 (CER)	15	7.0	90	22 KHz #	80	TO-3	2
ECG123	NPN-Si, AF Pre-Amp, Driver, Video Amp, Sync Sep	30	20	5	.500	.500	75	130	TO-5	1
ECG123A	NPN-Si, AF/RF Amp, Sw	75	40	6	.600	.500	300	200	TO-18	4
ECG123AP	NPN-Si, AF/RF Amp, CB Driver (Compl to ECG159)	75	40	6	.600	.500	300	200	TO-92	19
ECG124	NPN-Si, HV Audio Pwr Output, Line-Operated TV, Phono, Stereo	300	300	5	.400	20	30	100	TO-66	7
ECG126	PNP-Ge, RF/IF Amp, Osc, Mix, VHF Radio	25	25	1	.200	.200	250	60	TO-18	4
ECG127	PNP-Ge, Horiz & Vert Defl, Pwr Output	350	350 (CES)	2	10	56	1	15 min	TO-3	2
ECG128	NPN-Si, AF Pre-Amp, Driver, Output, Video Amp (Compl to ECG129)	100	80 (CER)	7	1	1	120	90	TO-39	10
ECG129	PNP-Si, AF Pre-Amp, Driver, Output, Video Amp (Compl to ECG128)	100	80 (CER)	7	1	1	120	90	TO-39	10
ECG130 ECG130MP*	NPN-Si, AF Pwr Amp (Compl to ECG219)	100	60 (CER)	7	15	115	.800	40	TO-3	2
ECG131 ECG131MP*	PNP-Ge, AF Pwr Output Auto Radio, Stereo, Tape (Compl to ECG155)	32	20	10	3 peak	6 (63°C)	1	110	MD-17	8
ECG152	NPN-Si, AF Pwr Output (Compl to ECG153)	60	60	5	7	50	10	60	TO-220	9
ECG153	PNP-Si, AF Pwr Output (Compl to ECG152)	60	60	5	7	50	10	60	TO-220	9
ECG154	NPN-Si, TV Video Output Amp	300	300	7	.500	1.0 (TA 25°C) 7.0 (TC 25°C)	40	60	TO-39	10
ECG155	NPN-Ge, AF Pwr Amp (Compl ECG131)	32	20	10	3 peak	7.5	1	110	MD-17	8
ECG157	NPN-Si, HV AF Pwr Amp	300	300	3	.500	20.8	10	30 min	X-58	11

Notes - See Page 24 Package/Outlines - See Page 28

Transistors (cont'd)

ECG Type	Description and Application	Collector To Base Volts BV_{CBO}	Collector To Emitter Volts BV_{CEO}	Base to Emitter Volts BV_{EBO}	Max. Collector Current I_C Amps	Max. Collector Diss. P_D Watts	Freq. in MHz f_t	Typical Current Gain h_{FE}	Package and Basing	
									Case	Fig. No.
ECG158	PNP-Ge, AF Pwr Amp	32	32	10	1	1.6	1.5	90	TO-1	12
ECG159	PNP-Si, AF Pre-Amp, Driver, Sw (Compl to ECG123AP)	80	80	5	1	.600	200	180	TO-92	19●
ECG160	PNP-Ge, RF/IF Amp, Osc, Mix, FM, TV	30	20 (CES)	0.5	10 mA	.200	400	20	TO-72	14
ECG161	NPN-Si, Video IF Amp	45	45 (CES)	4.5	50 mA	.180	800	60	TO-72	14
ECG162	NPN-Si, Vert Defl	500	300	5	10 peak	100	--	20 min	TO-3	2
ECG163A	NPN-Si, Horiz Defl	700	700 (CEV)	5	10 peak	100	--	--	TO-3	2
ECG164	NPN-Si, Vert Defl	1500	700 (CER)	5	1	50	.5 min	30 min	TO-3	2
ECG165	NPN-Si, Horiz Defl	1500	1400 (CES)	5	5	50	--	5 min	TO-3	2
ECG171	NPN-Si, AF/Video Amp	300	300	5	.100	6.25	75	20 min	X-51	15
ECG172A	NPN-Si, Darlington AF Pre-Amp, Medium-Speed Sw	40	40	12	.300	.400	60	7000 min	TO-98	5●
ECG175	NPN-Si, AF Pwr Amp	200	110 (CER)	7	4	40	15	80	TO-66	7
ECG176	PNP-Ge, AF Pwr Amp	25	25	6	2	6	.700	110	TO-39	10
ECG179	PNP-Ge, AF Amp	90	90 (CEX)	3	25	106	.35 min	55 min	TO-3	2
ECG180	PNP-Si, AF Amp (Compl to ECG181)	100	100 (CER)	4	30	200	2 min	25 min	TO-3	2
ECG181	NPN-Si, AF Amp (Compl to ECG180)	100	100 (CER)	4	30	200	2 min	25 min	TO-3	2
ECG182	NPN-Si, AF Pwr Amp, Hi-Speed Sw (Compl to ECG183)	80	80	4	10	90	2	30 min	X-58A	16
ECG183	PNP-Si, AF Pwr Amp, Hi-Speed Sw (Compl to ECG182)	80	80	4	10	90	2	30 min	X-58A	16
ECG184	NPN-Si, AF Pwr Amp, Hi-Speed Sw (Compl to ECG185)	60	60	5	4	40	2	30 min	X-58	11
ECG185	PNP-Si, AF Pwr Amp, Hi-Speed Sw (Compl to ECG184)	60	60	5	4	40	2	30 min	X-58	11
ECG186	NPN-Si, AF Pwr Amp, Hi-Speed Sw (Compl to ECG187)	60	60	5	3	12.5	50	80	X-51	15
ECG186A	NPN-Si, AF Pwr Amp, Driver, CB (Compl to ECG187A)	50	50	5	3	10	150	80 min	Mod X-51	27
ECG187	PNP-Si, AF Pwr Amp, Hi-Speed Sw (Compl to ECG186)	60	60	5	3	12.5	50	80	X-51	15
ECG187A	PNP-Si, AF Pwr Amp (Compl to ECG186A)	50	50	5	3	10	150	80	Mod X-51	27
ECG188	NPN-Si, AF Driver, Pwr Amp (Compl to ECG189)	80	80	4	1	5	50	80	X-81	17
ECG189	PNP-Si, AF Driver, Pwr Amp (Compl to ECG188)	80	80	4	1	5	50	80	X-81	17
ECG190	NPN-Si, AF Pwr Amp, Horiz Driver	180	180	5	1	8	100	40 min	X-81	17
ECG191	NPN-Si, HV AF Amp, HV Video Amp	300	300	8	1	1	60	40 min	X-81	17
ECG192	NPN-Si, AF Pwr Output (Compl to ECG193)	70	70 (CES)	5	1	.700 (TA 25°C) 1 (TC 25°C)	120 min	150	R-205	18
ECG192A	NPN-Si, AF PO	70	70 (CES)	5	.500	.6	120	120 min	R-205	18
ECG193	PNP-Si, AF Pwr Output (Compl to ECG192)	70	70 (CES)	5	1	.700 (TA 25°C) 1 (TC 25°C)	120 min	150	R-205	18
ECG193A	PNP-Si, AF PO	70	70 (CES)	5	.500	.6	120	120 min	R-205	18
ECG194	NPN-Si, Gen Purp HV Amp, Hi-Speed Sw	180	160	4	.600	.350 (TA 25°C)	100	100	TO-92	19
ECG195A	NPN-Si, RF Pwr Amp/Driver, CB (P_o 3.5 W min, 50 MHz, 12V)	70	70 (CER)	4	1.5	8	150	30 min	TO-39	10
ECG196	NPN-Si, AF Pwr Output (Compl to ECG197)	90	80 (CER)	5	7	50 (TC 25°C) 1.8 (TA 25°C)	.800 min	20 min	TO-220	9

Notes - See Page 24

Package/Outlines - See Page 28

Transistors (cont'd)

ECG Type	Description and Application	Collector To Base Volts BV_{CBO}	Collector To Emitter Volts BV_{CEO}	Base to Emitter Volts BV_{EBO}	Max. Collector Current I_C Amps	Max. Collector Diss. P_D Watts	Freq. in MHz f_t	Typical Current Gain h_{FE}	Package and Basing	
									Case	Fig. No.
ECG197	PNP-Si, AF Pwr Output (Compl to ECG196)	90	80 (CER)	5	7	50 (TC 25°C) 1.8 (TA 25°C)	.800	20 min	TO-220	9
ECG198	NPN-Si, HV AF, Sw	500	500 (CES)	5	1	40 (TC 25°C) 2 (TA 25°C)	20	80	TO-220	9
ECG199	NPN-Si, Lo-Noise, Hi-Gain Pre-Amp	70	50	5	.100	.360 (TA 25°C)	90 min	400 min	TO-98	5•
ECG210	NPN-Si, AF Output, Sw (Compl to ECG211)	75	75	5	1	6.25 (TC 25°C) 1.33 (TA 50°C)	200	120 min	X-51	15
ECG211	PNP-Si, AF Output, Sw (Compl to ECG210)	75	75	5	1	6.25 (TC 25°C) 1.33 (TA 50°C)	200	120 min	X-51	15
ECG213	PNP-Ge, Hi Current/Pwr	75	65	40	30	170 (TC 25°C)	.270	80	TO-36	3
ECG218	PNP-Si, AF Pwr Output	90	80	7	3	25 (TC 25°C)	3 min	20 min	TO-66	7
ECG219	PNP-Si, AF Output, Sw (Compl to ECG130)	100	70 (CER)	7	15	150 (TC 25°C)	4 min	20 min	TO-3	2
ECG223	NPN-Si, AF Output, Sw	70	50	5	8	83 (TC 25°C)	3	20 min	MS-9	20
ECG224	NPN-Si, Final RF Pwr Output, CB (P_o 4 W, 50 MHz)	60	60 (CEV)	2.5	2	10 (TC 25°C)	200	60	MD-34	21
ECG225	NPN-Si, AF, Video & Sw	450	350	7	1	10 (TC 25°C)	15	40 min	MD-34	21
ECG226 ECG226MP*	PNP-Ge, AF Pwr Output	35	35 (CER)	6	2	12 (TC 25°C)	.450	125	Mod TO-66	22
ECG228A	NPN-Si, Hi-Speed Sw Lin Amp, AF/Video Output	450	350	7	1	10 (TC 25°C) 1.75 (TA 25°C)	15	40	Mod X-51	27
ECG229	NPN-Si, VHF Osc, Mix, IF Amp	40	40	4	50 mA	.425	600	30 min	TO-92	19
ECG232	PNP-Si, Darlington Amp	30	30	8	.300	.625	175	50,000	TO-92	19
ECG233	NPN-Si, Final Video IF	30	30	3	.100	.625	300	45	TO-92	19
ECG234	PNP-Si, Lo-Noise, Hi-Gain AF Pre-Amp	60	50	5	50 mA	.200	80 min	400 min	TO-92	19
ECG235	NPN-Si, Final RF Pwr Output (P_o 5 W, 50 MHz)	65	65 (CER)	4	3 pulse	12	200 min	40 min	TO-220	9
ECG236	NPN-Si, Final RF Pwr Output (P_o 13 W, 50 MHz, SSB)	70	70 (CER)	4	8 pulse	25	100	20 min	TO-220	9
ECG237	NPN-Si, Final RF Pwr Output, CB (P_o 3 W, 27 MHz)	80	40	5	3	10	150 min	10 min	MD-32	26
ECG238	NPN-Si, Horizontal Output	1500	1500 (CER)	5	7	50	--	20	TO-3	2
ECG241	NPN-Si, AF Pwr, Sw (Compl to ECG242)	70	70	5	4	60	2	25 min	X-104	24•
ECG242	PNP-Si, AF Pwr, Sw (Compl to ECG241)	70	70	5	4	60	2	25 min	X-104	24•
ECG277	NPN-Si, TV Horizontal Output	1100	1100 (CES)	6	1	40	5 min	30 min	MD-17	8
ECG278	NPN-Si, Broad Band RF Amp, CATV/COMM/MATV	40	30	4	.400	3.5	1200 min	30 min	TO-39	10
ECG280 ECG280MP*	NPN-Si, AF Pwr Amp (Compl to ECG281)	140	140	5	12	100	6	70 min	TO-3	2
ECG281	PNP-Si, AF Pwr Amp (Compl to ECG280)	140	140	5	12	100	6	70 min	TO-3	2
ECG282	NPN-Si, Final RF Pwr Amp, Sw (P_o 4 W, 27 MHz)	150	100	6	4	10	70 min	85 min	TO-39	10
ECG283	NPN-Si, HV-Hi Current Sw, Horiz Output	800	325	8	10	100	6	15 min	TO-3	2
ECG284 ECG284MP*	NPN-Si, AF Pwr Amp (Compl to ECG285)	180	180	5	16	150	6	70 min	TO-3	2
ECG285	PNP-Si, AF Pwr Amp (Compl to ECG284)	180	180	5	16	150	6	70 min	TO-3	2
ECG286	NPN-Si, Pwr Amp, Sw, Horiz Output	300	250	6	2	25	8	100 min	TO-66	7
ECG287	NPN-Si, HV Gen Purp Amp (Compl to ECG288)	300	300	8	.6	.625	50	40 min	TO-92	19

Notes - See Page 24 Package/Outlines - See Page 28

Transistors (cont'd)

ECG Type	Description and Application	Collector To Base Volts BV_{CBO}	Collector To Emitter Volts BV_{CEO}	Base to Emitter Volts BV_{EBO}	Max. Collector Current I_C Amps	Max. Collector Diss. P_D Watts	Freq. in MHz f_t	Typical Current Gain h_{FE}	Package and Basing	
									Case	Fig. No.
ECG288	PNP-Si, HV Gen Purp Amp (Compl to ECG287)	300	300	8	.6	.625	50	40 min	TO-92	19
ECG289 ECG289MP*	NPN-Si, AF Pwr Amp (Compl to ECG290)	45	45	5	.5	.6	100	120 min	U-83	29
ECG290	PNP-Si, AF Pwr Amp (Compl to ECG289)	45	45	5	.5	.6	100	120 min	U-83	29
ECG291	NPN-Si, Pwr Amp, Sw (Compl to ECG292)	130	120	5	4	40	4 min	75	TO-220	9
ECG292	PNP-Si, Pwr Amp, Sw (Compl to ECG291)	130	120	5	4	40	4 min	75	TO-220	9
ECG293 ECG293MP*	NPN-Si, AF Pwr Amp (Compl to ECG294)	60	50	5	1.5	1	200	120	U-55A	30
ECG294	PNP-Si, AF Pwr Amp (Compl to ECG293)	60	50	5	1.5	1	200	120	U-55A	30
ECG295	NPN-Si, RF Output/Driver, CB	75	40	5	1	1	150 min	20 min	X-58	11
ECG297 ECG297MP*	NPN-Si, AF Driver, Pwr Amp (Compl to ECG298)	80	80	5	1	.75	120	130	U-55A	30
ECG298	PNP-Si, AF Driver/Pwr Amp (Compl to ECG297)	80	80	5	1	.75	120	130	U-55A	30
ECG299	NPN-Si, RF Driver/Pwr Amp	75	35	4	1	4 (TC 25°C)	200	10 min	X-51	15
ECG300 ECG300MP*	NPN-Si, AF Pwr Output (Compl to ECG307)	50	40	5	1.5	7	70	90 min	X-51	15
ECG302	NPN-Si, RF Driver/Pwr Amp, CB	100	50	6	1.5	8	80	200 min	U-89	31
ECG306	NPN-Si, RF Driver/Pwr Amp, CB	100	50	6	1.5	8	80	200 min	U-89	31
ECG307	PNP-Si, AF Pwr Output (Compl to ECG300)	50	40	5	1.5	7	70	90 min	X-51	15
ECG311	NPN-Si, VHF/UHF Osc, Amp, Driver	55	30	3.5	.400	5	800 min	25 min	TO-39	10
ECG313	NPN-Si, VHF Tuner, RF Amp	30	30	4	20 mA	.15	400 min	25 min	U-23A	32
ECG315	NPN-Si, RF Driver, CB	100	50	6	1	.75	80	200 min	U-45B	33
ECG316	NPN-Si, Lo-Noise UHF Amp (NF 4.5 dB max, 450 MHz)	30	15	3.5	50 mA	.200	1400	25 min	TO-72	14
ECG317	NPN-Si, RF Pwr Output (P_o 70 W, 30 MHz)	36	36 (CES)	4	15	220	--	10 min	W-52	34
ECG318	NPN-Si, RF Pwr Output (P_o 50 W, 30 MHz)	36	36 (CES)	4	6	80	--	5 min	W-52	34
ECG319	NPN-Si, AGC-Controlled TV IF	20	20	3	50 mA	.260	300 min	80	TO-72	14
ECG320	NPN-Si, RF Pwr Output (P_o 40 W, 175 MHz)	36	36	4	6	80 (TC 25°C)	--	--	MT-72	35
ECG321	NPN-Si, Horiz Defl	1600	700	5	1.5	15 (TC 70°C)	--	1.5 min	TO-66	7
ECG322	NPN-Si, RF Pwr Amp, CB, (P_o 3.5 W min, 27 MHz)	--	65	3	.500	10	--	--	X-81	17
ECG323	PNP-Si, AF Pwr Amp (Compl to ECG324)	110	110	5	1.5	.800	--	30	TO-39	10
ECG324	NPN-Si, AF Pwr Amp (Compl to ECG323)	110	110	5	1.5	.800	--	30	TO-39	10
ECG325	NPN-Si, RF PO, 14-30 MHz, 50 W	40	20	4	7.5	115	--	--	--	25
ECG327	NPN-Si, Pwr Amp, Sw	180	150	6	25	200	40	30 min 120 max	TO-3	2
ECG328	NPN-Si, Pwr Amp, Sw	150	130	7	15	80	60	12 min 100 max	TO-3	2
ECG329	NPN-Si, RF Pwr Amp, CB (P_o 3.5 W min, 27 MHz)	--	30	2.5	1.5 peak	5	--	--	TO-39	10
ECG330	PNP-Ge, Fast Pwr Sw	--	40	1.4	25	170	--	12	TO-36	3
ECG331	NPN-Si, AF PO, Reg, Sw (Compl to ECG332)	100	100	5	15	90	3 min	40	TO-220	9

Notes - See Page 24

Package/Outlines - See Page 28

Transistors (cont'd)

ECG Type	Description and Application	Collector To Base Volts BV_{CBO}	Collector To Emitter Volts BV_{CEO}	Base to Emitter Volts BV_{EBO}	Max. Collector Current I_C Amps	Max. Collector Diss. P_D Watts	Freq. in MHz f_t	Typical Current Gain h_{FE}	Package and Basing	
									Case	Fig. No.
ECG332	PNP-Si, AF PO, Reg, Sw (Compl to ECG331)	100	100	5	15	90	3 min	40	TO-220	9
ECG333	NPN-Si, RF PO, 14-30 MHz, 60 W	36 (CES)	18	4	15	175	--	10 min	--	6
ECG334	NPN-Si, RF PO, 14-30 MHz, 60 W	36 (CES)	18	4	15	175	--	10 min	--	25
ECG335	NPN-Si, RF PO, 14-30 MHz, 80 W	45	25	4	20	250	--	10 min	--	34
ECG336	NPN-Si, RF PO, 14-30 MHz, 80 W	45	25	4	20	250	--	10 min	--	28
ECG337	NPN-Si, RF Driver, 27-50 MHz, 8 W	36	18	4	2	20	--	5 min	--	25
ECG338	NPN-Si, RF Driver & Output, 27-50 MHz, 20 W	48	24	4	3.5	50	--	15 typ	--	25
ECG339	NPN-Si, RF PO, 27-50 MHz, 40 W	48	24	4	7	100	--	3 min	--	28
ECG340	NPN-Si, RF PO, Driver, 136-174 MHz, 600 mW	36	18	4	.500	.750	--	70 typ	U-55A	30
ECG341	NPN-Si, RF PO, 136-174 MHz, 4 W	36	18	4	.640	8	--	5 min	--	37
ECG342	NPN-Si, RF PO, 136-174 MHz, 7 W	35	17	4	2	12.5	--	50 typ	--	41
ECG343	NPN-Si, RF PO, 136-174 MHz, 14 W	35	17	4	3.5	25	--	50 typ	--	41
ECG344	NPN-Si, RF PO, 136-174 MHz, 30 W	35	17	4	7	50	--	50 typ	--	42
ECG345	NPN-Si, RF PO, 136-174 MHz, 30 W	36	18	4	4	65	--	5 min	--	25
ECG346	NPN-Si, RF Driver & Predriver, 136-174 MHz, 1 W	40	20	2	.400	1	500	10 min	--	10
ECG347	NPN-Si, RF PO, 136-174 MHz, 3 W	36	18	4	.600	15	--	5 min	--	38
ECG348	NPN-Si, RF PO, 136-174 MHz, 4 W	36	18	4	1	12	--	5 min	--	25
ECG349	NPN-Si, RF PO, 136-174 MHz, 10 W	36	18	4	2	30	--	5 min	--	25
ECG350	NPN-Si, RF PO, 136-174 MHz, 15 W	36	18	4	2.5	31	--	5 min	--	25
ECG351	NPN-Si, RF PO, 136-174 MHz, 25 W	36	18	4	4	65	--	5 min	--	25
ECG352	NPN-Si, RF PO, 136-174 MHz, 80 W	36	18	4	20	250	--	35	--	39
ECG353	PNP-Si, RF PO, 136-174 MHz, 4 W	36	18	4	1	8	--	5 min	--	43
ECG354	PNP-Si, RF PO, 136-174 MHz, 15 W	36	18	4	2.5	20	--	5 min	--	43
ECG355	PNP-Si, RF PO, 136-174 MHz, 30 W	36	18	4	4	40	--	5 min	--	43
ECG356	PNP-Si, RF PO, 136-174 MHz, 40 W	36	18	4	6	60	--	5 min	--	43
ECG357	NPN-Si, RF PO, 30-200 MHz, 7 W	65	35	4	1	15	--	5 min	--	38
ECG359	NPN-Si, RF PO, 30-200 MHz, 20 W	65	35	4	3	30	--	5 min	--	25
ECG360	NPN-Si, RF PO, 30-200 MHz, 40 W	65	35	4	5	60	--	5 min	--	25
ECG361	NPN-Si, RF PO, 407-512 MHz, 2 W	36	16	4	.400	5	--	20 min	--	37
ECG362	NPN-Si, RF PO, 407-512 MHz, 2 W	36	16	4	.400	5	--	20 min	--	40

Notes - See Page 24 Package/Outlines - See Page 28

Transistors (cont'd)

ECG Type	Description and Application	Collector To Base Volts BV_{CBO}	Collector To Emitter Volts BV_{CEO}	Base to Emitter Volts BV_{EBO}	Max. Collector Current I_C Amps	Max. Collector Diss. P_D Watts	Freq. in MHz f_t	Typical Current Gain h_{FE}	Package and Basing	
									Case	Fig. No.
ECG363	NPN-Si, RF PO, 407-512 MHz, 4 W	36	16	4	.800	15	--	20 min	--	40
ECG364	NPN-Si, RF PO, 407-512 MHz, 10 W	36	16	4	2	37.5	--	20 min	--	40
ECG365	NPN-Si, RF PO, 407-512 MHz, 15 W	36	16	4	3	50	--	30 min	--	39
ECG366	NPN-Si, RF PO, 407-512 MHz, 25 W	36	16	4	6	117	--	40 min	--	39
ECG367	NPN-Si, RF PO, 407-512 MHz, 45 W	36	16	4	8	175	--	20 min	--	39
ECG368	NPN-Si, RF PO, 407-512 MHz, 60 W	36	16	4	10	233	--	20 min	--	39
ECG369	NPN-Si, Vert Output, Sw	800	400	6	3.0 peak	40	7	30 min	TO-66	7
ECG373	NPN-Si, AF Driver (Compl to ECG374)	180	160	5	1.5	1	140	190	X-58	11
ECG374	PNP-Si, AF Driver (Compl to ECG373)	180	160	5	1.5	1	140	190	X-58	11
ECG375	NPN-Si, Vert Defl	200	150	6	3	25	8	150	TO-220	9
ECG376	NPN-Si, Pwr Amp	300	300	5	150 mA	1.5	80	100	TO-220	9
ECG377	NPN-Si, Pwr Driver, PO, Sw, Reg (Compl to ECG378)	--	80	5	10	50	50	40 min	TO-220	9
ECG378	PNP-Si, Pwr Driver, PO, Sw, Reg (Compl to ECG377)	--	80	5	10	50	50	40 min	TO-220	9
ECG379	NPN-Si, HV Hi-Speed Pwr Sw	--	400	9	12	100	4 min	20	TO-220	9
ECG380	NPN-Si, AF Pwr Amp (Compl to ECG381)	150	120	5	7	80	6	60	B33	44
ECG381	PNP-Si, AF Pwr Amp (Compl to ECG380)	150	120	5	5	80	9	60	B33	44
ECG382	NPN-Si, AF Driver (Compl to ECG383)	120	100	5	1	0.9	140	200	U-45B	33
ECG383	PNP-Si, AF Driver (Compl to ECG382)	120	100	5	1	0.9	140	200	U-45B	33
ECG384	NPN-Si, Sw, Linear App	375	350	9	7	45	1 min	20	TO-66	7
ECG385	NPN-Si, HV Hi-Speed Sw	--	350	6	10	150	--	20	TO-3	2
ECG386	NPN-Si, HV Hi-Speed Sw	--	500	6	20	175	--	30	TO-3	2
ECG387	NPN-Si, Pwr Amp, Sw	180	150	6	50	250	30 min	70	TO-3	2
ECG388	NPN-Si, Hi-Pwr AF	400	250	7	16	250	4 min	30	TO-3	2
ECG389	NPN-Si, Horiz Output	1500	1500 (CES)	5	4	100	4 min	5 min	TO-3	2
ECG390	NPN-Si, Pwr Amp, Hi-Speed Sw (Compl to ECG391)	100	100	5	10	80	--	40 min	Plastic TO-3	23
ECG391	PNP-Si, Pwr Amp, Hi-Speed Sw (Compl to ECG390)	100	100	5	10	80	--	40 min	Plastic TO-3	23
ECG392	NPN-Si, Pwr Amp, Hi-Speed Sw (Compl to ECG393)	100	100	5	25	125	--	25 min	Plastic TO-3	23
ECG393	PNP-Si, Pwr Amp, Hi-Speed Sw (Compl to ECG392)	100	100	5	25	125	--	25 min	Plastic TO-3	23
ECG394	NPN-Si, HV Pwr Amp, Sw	500	400	5	3	100	--	30 min	Plastic TO-3	23
ECG395	PNP-Si, Wide Band VHF/UHF Amp, Osc	30	25	3	50 mA	360 mW	2.3 gHz	25 min	TO-72	14
ECG396	NPN-Si, Linear Amp & Hi-Speed Sw (Compl to ECG397)	450	350	7	1	10	15 min	60	TO-39	10
ECG397	PNP-Si, Linear Amp & Hi-Speed Sw (Compl to ECG396)	350	300	6	1	10	15 min	50	TO-39	10

Notes: * MP - Matched pair
Frequency at which common emitter current gain is 70.0% of low frequency gain
• May be supplied in alternate package - see table in designated figure

Package/Outlines - See Page 28

Complementary Pairs

NPN Type	PNP Type
ECG103	ECG102
ECG103A	ECG102A
ECG123AP	ECG159
ECG128	ECG129
ECG130	ECG219
ECG155	ECG131
ECG152	ECG153
ECG181	ECG180
ECG182	ECG183

NPN Type	PNP Type
ECG184	ECG185
ECG186	ECG187
ECG186A	ECG187A
ECG188	ECG189
ECG192	ECG193
ECG196	ECG197
ECG210	ECG211
ECG241	ECG242
ECG280	ECG281

NPN Type	PNP Type
ECG284	ECG285
ECG287	ECG288
ECG289	ECG290
ECG291	ECG292
ECG293	ECG294
ECG297	ECG298
ECG300	ECG307
ECG324	ECG323
ECG331	ECG332

NPN Type	PNP Type
ECG373	ECG374
ECG377	ECG378
ECG380	ECG381
ECG382	ECG383
ECG390	ECG391
ECG392	ECG393
ECG394	ECG395
ECG396	ECG397

RF Transistor Selector Guide

Amateur 13-30 MHz

ECG Type	Description and Application	Output Power Watts P_{out}	Input Power Watts P_{in}	Supply Voltage V_{cc}	Test Freq MHz	Fig. No.	
ECG318	NPN-Si, PO	50	1.6	12.5	30	34	
ECG325	NPN-Si, PO	50	4	13.6	30	25	
ECG333	NPN-Si, PO	60	3	12.5	30	6	
ECG334	NPN-Si, PO	60	3	12.5	30	25	
ECG317	NPN-Si, PO	70	3	12.5	30	34	
ECG335	NPN-Si, PO	80	5	12.5	30	34	
ECG336	NPN-Si, PO	80	5	12.5	30	28	

Low Band FM 27-50 MHz

ECG337	NPN-Si, Driver	8	.8	12.5	50	25	
ECG338	NPN-Si, Driver/PO	20	3.2	12.5	50	25	
ECG339	NPN-Si, PO	40	7	12.5	50	28	

VHF Marine FM 156-162 MHz

ECG340	NPN-Si, Driver/PO	0.6	.05	13.5	175	30	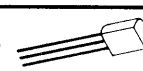
ECG341	NPN-Si, Driver/PO	4	.25	12.5	175	37	
ECG342	NPN-Si, PO	7	.6	13.5	175	41	
ECG343	NPN-Si, PO	14	2.5	13.5	175	41	
ECG344	NPN-Si, PO	30	6	13.5	175	42	
ECG345	NPN-Si, PO	30	3.8	13.6	160	25	

Package/Outlines - See Page 28

High Band VHF FM 136-174 MHz

ECG Type	Description and Application	Output Power Watts P_{out}	Input Power Watts P_{in}	Supply Voltage V_{cc}	Test Freq MHz	Fig. No.	
ECG346	NPN-Si, Predriver, Driver	1	0.1	12.0	175	10	
ECG347	NPN-Si, Driver/PO	3	0.5	13.6	175	38	
ECG341	NPN-Si, Driver/PO	4	0.25	12.5	175	37	
ECG348	NPN-Si, Driver/PO	4	0.25	12.5	175	25	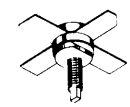
ECG349	NPN-Si, Driver/PO	10	3	13.6	175	25	
ECG350	NPN-Si, Driver/PO	15	3.8	12.5	175	25	
ECG351	NPN-Si, Driver/PO	25	6	12.5	175	25	
ECG345	NPN-Si, Driver/PO	30	3.8	13.6	160	25	
ECG320	NPN-Si, PO	40	14	12.5	175	35	
ECG352	NPN-Si, PO	80	18	12.5	175	39	
ECG353	**PNP**-Si, PO	4	0.25	12.5	175	43	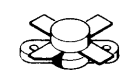
ECG354	**PNP**-Si, PO	15	3.8	12.5	175	43	
ECG355	**PNP**-Si, PO	30	8	12.5	175	43	
ECG356	**PNP**-Si, PO	40	14	12.5	175	43	

VHF AM 108-175 MHz

ECG311	NPN-Si, Predriver, Driver, PO	1	0.1	28	175	10	
ECG357	NPN-Si, Driver/PO	7	1.0	28	175	38	
ECG359	NPN-Si, Driver/PO	20	3	28	175	25	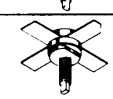
ECG360	NPN-Si, Driver/PO	40	7	28	175	25	

UHF FM 407-512 MHz

ECG361	NPN-Si, Driver/PO	2	.32	12.5	470	37	
ECG362	NPN-Si, Driver/PO	2	5.0	12.5	470	40	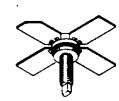
ECG363	NPN-Si, Driver/PO	4	0.63	12.5	470	40	
ECG364	NPN-Si, Driver/PO	10	2.5	12.5	470	40	
ECG365	NPN-Si, Driver/PO	15	3.0	12.5	470	39	
ECG366	NPN-Si, Driver/PO	25	6	12.5	470	39	
ECG367	NPN-Si, PO	45	15	12.5	470	39	
ECG368	NPN-Si, PO	60	22	12.5	470	39	

Package/Outlines - See Page 28

Field Effect Transistors (FET)

ECG Type	Description and Application	Trans-conductance gfs Typ µmhos	Gate to Source Cutoff Voltage $V_{GS\ (off)}$ Max V	Zero-Gate Voltage Drain Current I_{DSS} mA Min - Max	Gate to Source Breakdown Voltage BV_{GSS} Min V	Input Cap C_{iss} Max pf	Transfer Cap C_{rss} Max pf	Device Diss P_D Max mW	Package and Basing Case	Package and Basing Fig. No.
ECG132	JFET, N-Ch, VHF Amp/Mix, NF 4dB Max at 400 MHz	4,500	6	8 - 20	25	5	1.2	310	TO-106	13●
ECG133	JFET, N-Ch, Gen Purp AF Amp/Sw	4,000	6	5 - 15	30	6	2	300	TO-106	13●
ECG220▲	MOSFET, N-Ch, VHF Amp/Mix, NF 5dB Max at 200 MHz	7,500	8	5 - 25	20	7	0.35	330	TO-72	14
ECG221▲	MOSFET, N-Ch, VHF Amp/Mix, NF 5dB Max at 200 MHz	15,000	6	18 Typ	20	5.5	0.03	400	TO-72	14
ECG222▲	MOSFET, N-Ch, VHF Amp/Mix, NF 6dB Max at 200 MHz	12,000	4	5 - 35	20	6 Typ	0.03	330	TO-72	14
ECG312	JFET, N-Ch, VHF Amp/Mix, NF 4dB Max at 400 MHz	5,500	6	5 - 15	30	4.5	1.0	360	TO-106	13●
ECG326	JFET, P-Ch, Gen Purp AF Amp, NF 2.5dB Max at 100 Hz	3,000	7.5	2 - 9	60	7	2	310	TO-92	19
ECG451	JFET, N-Ch, UHF/VHF Amp, NF 4dB at 400 MHz	4,000	4	4 - 10	25	5	1.2	310	TO-92	19
ECG452	JFET, N-Ch, UHF/VHF Amp, NF 4dB at 400 MHz	5,500	6	5 - 15	30	4	0.8	300	TO-72	14
ECG453	JFET, N-Ch, VHF/FM Amp, NF 3.5dB at 100 MHz	7,000	--	12 - 24	18	--	0.65	200	R-67	46
ECG454▲	Dual Gate MOSFET, N-Ch, UHF/VHF Amp, NF 7dB at 900 MHz	15,000	4	6 - 30	25	--	0.03	360	TO-72	14
ECG456	JFET, N-Ch, Gen Purp Amp/Sw	3,500	6	2 - 6	30	6	2	300	TO-72	14
ECG457	JFET, N-Ch, Gen Purp Amp/Sw	3,000	5	1 - 5	25	6	3	310	TO-92	19
ECG459	JFET, N-Ch, AF Amp/Chopper/Sw	4,500	6	2 - 10	50	6	3	300	TO-72	14
ECG460	JFET, P-Ch, AF Amp	2,500	6	2 - 6	20	20	--	300	TO-72	14
ECG461	Matched Dual JFET, N-Ch, DC Amp/Sampler/Chopper	3,500	4.5	0.5 - 8	50	6	2	400	TO-71	45
ECG462▲	MOSFET, N-Ch, AF Amp, NF 3.8dB at 1.0 kHz	2,250	7	2 - 6	20	8	0.8	300	TO-18	4

ECG Type	Description and Application	Trans-conductance gfs µmhos	Gate to Source Cutoff Voltage $V_{GS\ (off)}$ Max V	Zero-Gate Drain Current I_{DSS}	Drain Current I_D	Input Cap C_{iss} Max pf	Gate to Source Breakdown Voltage BV_{GSS} Min V	Drain to Source Resistance $r_{DSS(on)}$ Max ohms	Device Diss P_D Max mW	Package and Basing Case	Package and Basing Fig. No.
ECG463▲	Dual MOSFET, P-Ch, Enhancement, Sw/DC Amp	2,000 Min	6	0.2 nA Max ($I_{D\ off}$)	10 mA Min (on)	4	30	150	500	TO-99	47
ECG464▲	MOSFET, P-Ch, Enhancement, Sw (Compl to ECG465)	1,000 Min	5	10 nA Max	3 mA Min (on)	5	25	600	300	TO-72	14
						td 60 ns; tr 65 ns; t(off) 60 ns					
ECG465▲	MOSFET, N-Ch, Enhancement, SW (Compl to ECG464)	1,000 Min	5	10 nA Max	3 mA Min (on)	5	25	300	300	TO-72	14
						td 60 ns; tr 65 ns; t(off) 60 ns					
ECG466	JFET, N-Ch, Chopper/Sw	--	10	50 mA Min	250 pA Max (off)	18	40	25	360	TO-18	4
						td 6 ns; tr 3 ns; t(off) 25 ns					
ECG467	JFET, N-Ch, Chopper/Fast Sw	--	--	50 mA Min	1.0 nA Max (off)	10	30	30	310	TO-92	19
						td 4 ns; tr 5 ns; t(off) 5 ns					

Note: ▲ Refer to MOSFET Handling Precautions page 2

Package/Outlines - See Page 28

Darlington Power Transistors

ECG Type	Descrip-tion	Collector To Emitter Volts BV_{CEO}	Collector To Base Volts BV_{CBO}	Emitter To Base Volts BV_{EBO}	Max. Collector Current I_C Amps	Max. Base Current I_B mA	Max. Device Diss. P_D Watts	Typ. Current Gain H_{FE}	Equiv. Circuit	Package/ Basing Fig. No.	Compl. Type
ECG243	NPN	80	80	5	8	120	100	3000	A	2	ECG244
ECG244	PNP	80	80	5	8	120	100	3000	B	2	ECG243
ECG245	NPN	80	80	5	10	200	150	4000	A	2	ECG246
ECG246	PNP	80	80	5	10	200	150	4000	B	2	ECG245
ECG247	NPN	100	100	5	12	200	150	3500	A	2	ECG248
ECG248	PNP	100	100	5	12	200	150	3500	B	2	ECG247
ECG249	NPN	100	100	5	16	500	150	3500	A	2	ECG250
ECG250	PNP	100	100	5	16	500	150	3500	B	2	ECG249
ECG251	NPN	100	100	5	20	500	160	2400	A	2	ECG252
ECG252	PNP	100	100	5	20	500	160	2400	B	2	ECG251
ECG253	NPN	80	80	5	4	100	40	2000	A	11	ECG254
ECG254	PNP	80	80	5	4	100	40	2000	B	11	ECG253
ECG257	NPN	80	80	5	5	100	70	750 Min.	A	16	ECG258
ECG258	PNP	80	80	5	5	100	70	750 Min.	B	16	ECG257
ECG259	NPN	100	100	5	8	120	75	2500	A	16	ECG260
ECG260	PNP	100	100	5	8	120	75	2500	B	16	ECG259
ECG261	NPN	80	80	5	8	250	60	1000 Min.	A	9	ECG262
ECG262	PNP	80	80	5	8	250	60	1000 Min.	B	9	ECG261
ECG263	NPN	80	80	5	10	250	40	1000 Min.	A	9	ECG264
ECG264	PNP	80	80	5	10	250	40	1000 Min.	B	9	ECG263
ECG265	NPN	50	50	13	0.5	---	6.25	10,000 Min.	C	15	---
ECG266	NPN	50	50	13	0.5	---	6.25	40,000 Min.	C	15	---
ECG267	NPN	30	30	13	0.5	---	6.25	90,000 Min.	C	15	---
ECG268	NPN	50	50	13	2	---	10	1000 Min.	C	15	ECG269
ECG269	PNP	50	50	13	2	---	10	1000 Min.	D	15	ECG268
ECG270	NPN	100	100	5	10	500	125	1000 Min.	E	23	ECG271
ECG271	PNP	100	100	5	10	500	125	1000 Min.	F	23	ECG270
ECG272	NPN	40	50	12	2	---	10	25,000 Min.	C	17	ECG273
ECG273	PNP	40	50	12	2	---	10	25,000 Min.	D	17	ECG272
ECG274	NPN	80	80	5	4	80	50	3000	A	7	ECG275
ECG275	PNP	80	80	5	4	80	50	3000	B	7	ECG274

CIRCUIT A

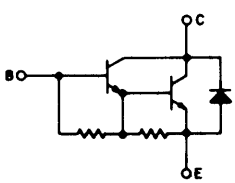

CIRCUIT B

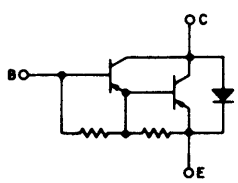

CIRCUIT C

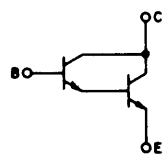

CIRCUIT D

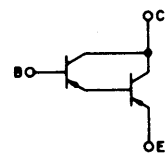

CIRCUIT E

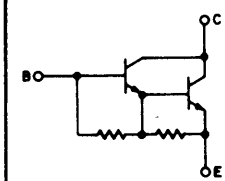

CIRCUIT F

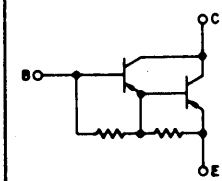

Transistor Outlines

Fig. 1
TO-5

ECG
100
101
102
103
123

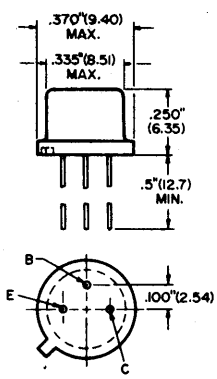

Fig. 2
TO-3

ECG

104	246	387
121	247	388
127	248	389
130	249	
162	250	
163A	251	
164	252	
165	280	
179	281	
180	283	
181	284	
219	285	
238	327	
243	328	
244	385	
245	386	

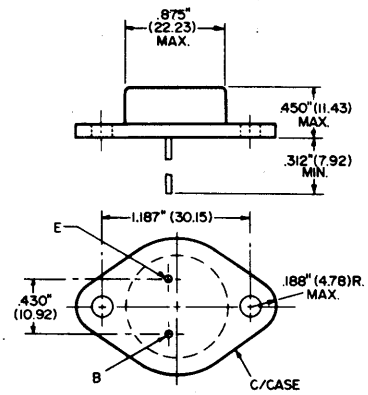

Fig. 3
TO-36

ECG
105
213
330
330W*

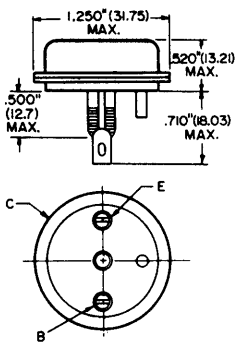

* SUPPLIED WITH WELDED-ON WIRE LEADS

Transistor Outlines (cont'd)

Fig. 4
TO-18

ECG	1	2	3
106	E	B	C
123A	E	B	C
126	E	B	C
462	S	G	D
466	S	D	G

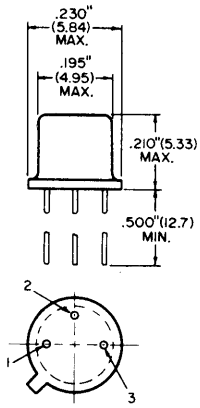

(ECG123A - Collector Tied To Case)

Fig. 5
TO-98

ECG
172A ■
199 ■

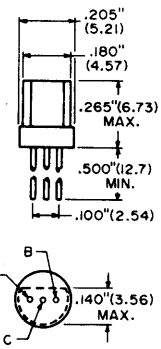

■ Alternate Fig. 19

Fig. 6

ECG
333

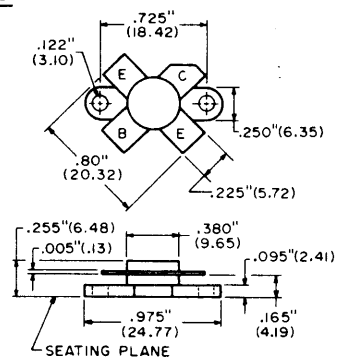

Fig. 7
TO-66

ECG
124
175
218
274
275
286
321
369
384

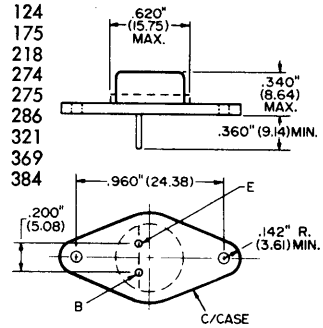

Fig. 8
MD-17

ECG
131
155
277

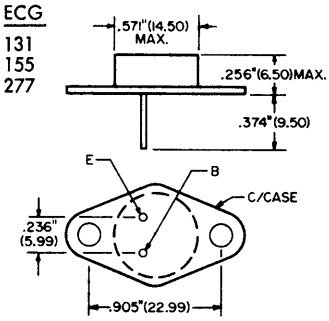

Fig. 9
TO-220 X-75

MECHANICAL INTERCHANGEABILITY OF PLASTIC PACKAGE WITH TO-66 CASE - SEE DETAILED ILLUSTRATION PAGE 2

ECG

152	263
153	264
196	291
197	292
198	331
235	332
236	375
241 ●	376
242 ●	377
261	378
262	379

● Alternate Fig. 24

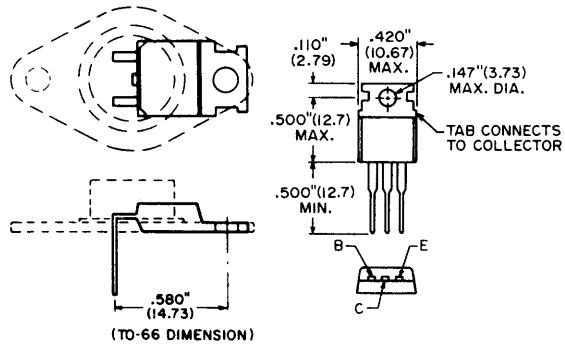

Fig. 10
TO-39

ECG
128
129
154
176
195A
278
282
311
323
324
329
346
396
397

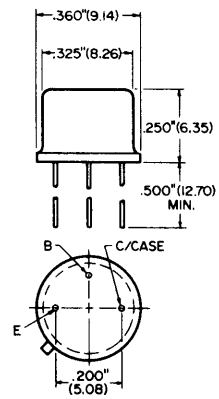

Fig. 11
X-58 - U116

ECG
157
184
185
253
254
295
373
374

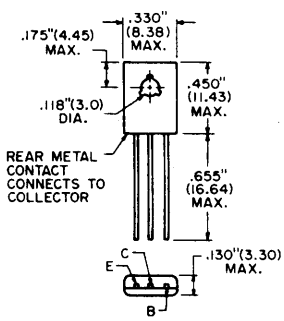

Fig. 12
TO-1

ECG
102A
103A
158

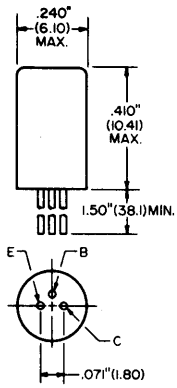

Fig. 13
TO-106

ECG	1	2	3
132 ●	S	D	G
133 ●	S	D	G
159 ■	E	B	C
312 ●	S	D	G

● Alternate Fig. 36
■ Alternate Fig. 19

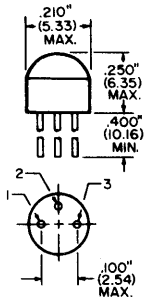

Fig. 14
TO-72

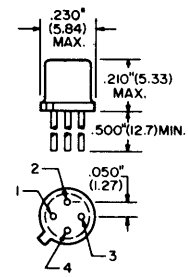

ECG	1	2	3	4
160	E	B	C	CASE
161	E	B	C	CASE
220	D	S	G	CASE
221	D	G2	G1	S, CASE
222	D	G2	G1	S, CASE
316	E	B	C	CASE
319	B	E	C	CASE
395	E	B	C	CASE
452	S	D	G	CASE
454	D	G2	G1	S, CASE
456	D	S	G	CASE
459*	S	D	G	CASE
460	S	G	D	CASE
464	S	G	D	S, CASE
465	S	G	D	CASE

* D & S Interchangeable

Fig. 15
X-51

ECG	1	2	3
171 210 211 265 266 267 268 269	E	B	C
186 187	B	C	E
299 300 307	C	B	E

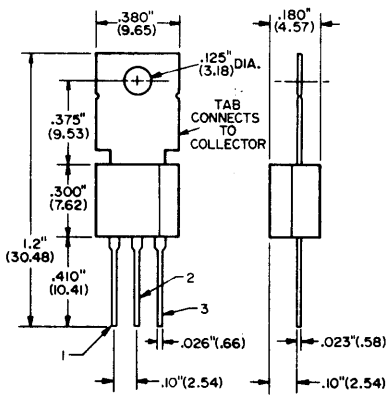

Fig. 16
X-58A

ECG
182
183
257
258
259
260

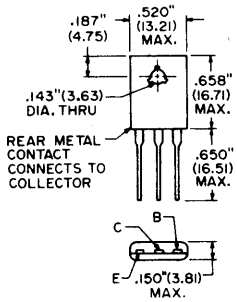

Transistor Outlines (cont'd)

Fig. 17
X-81

ECG
188
189
190
191
272
273
322

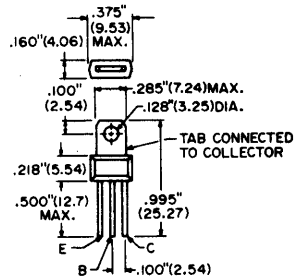

Fig. 18
R-205

ECG	1	2	3
192	C	B	E
192A	B	C	E
193	C	B	E
193A	B	C	E

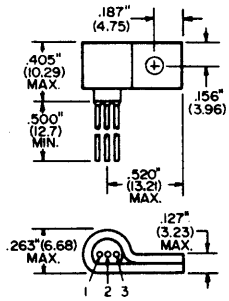

Fig. 19
TO-92

ECG	1	2	3
107	E	C	B
108	E	B	C
123AP	E	B	C
159●	E	B	C
172A■	E	C	B
194	E	B	C
199	E	C	B
229	B	E	C
232	E	B	C

ECG	1	2	3
233	E	B	C
234	E	C	B
287	E	B	C
288	E	B	C
326	S	D	G
451	D	S	G
457*	D	S	G
467	D	S	G

● Alternate Fig. 13
■ Alternate Fig. 5
* D & S Interchangeable

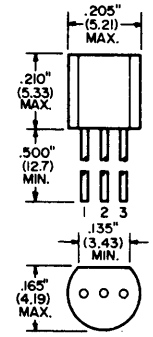

Fig. 20
MS-9

ECG
223

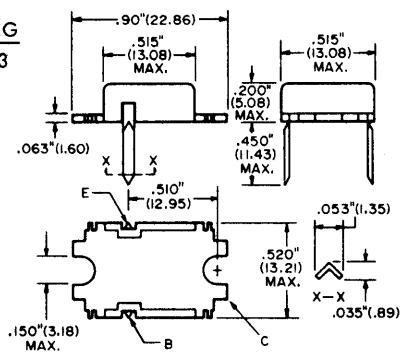

FORMED FOR TO-3 SOCKET

Fig. 20A
MS-9A

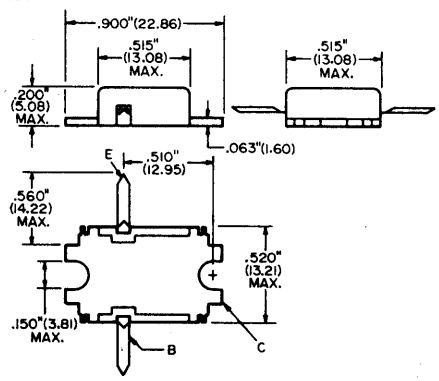

Fig. 20B
MOUNTING DETAIL

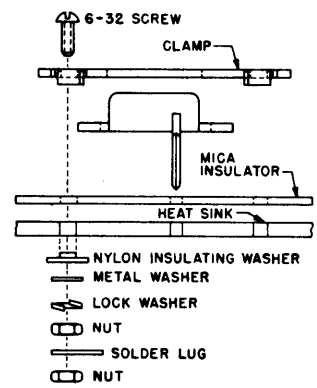

Fig. 21
MD-34

ECG
224
225

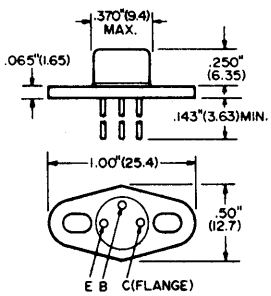

Fig. 22
MOD
TO-66

ECG
226

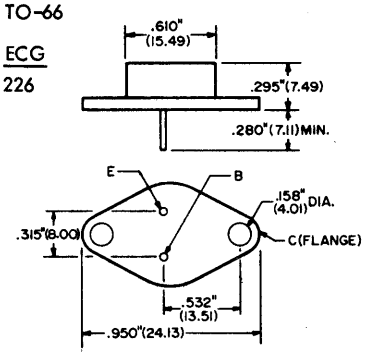

Fig. 23
PLASTIC
TO-3

ECG
270
271
390
391
392
393
394

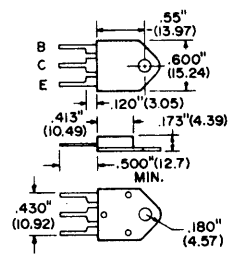

Fig. 24
X-104

ECG
241●
242●

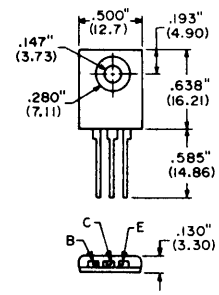

● Alternate Fig. 9

Fig. 25

ECG
325
334
337
338
345
348
349
350
351
359
360

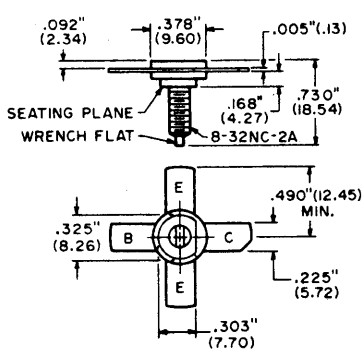

Fig. 26
MD-32

ECG
237

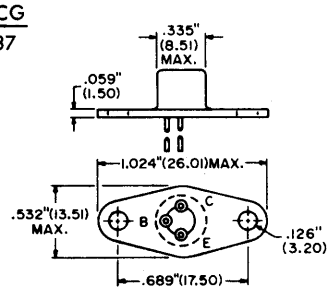

Fig. 27
MOD
X-51

ECG	1	2	3	TAB
186A	E	C	B	C
187A	E	C	B	C
228A	C	B	E	C

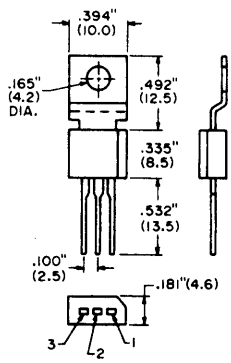

Transistor Outlines (cont'd)

Fig. 28

ECG
336
339

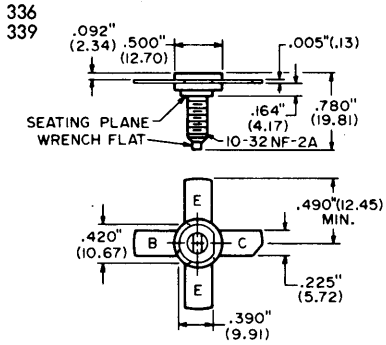

Fig. 29
U-83

ECG
289
290

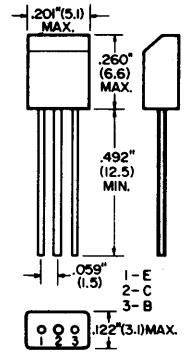

Fig. 30
U-55A

ECG
293
294
297
298
340

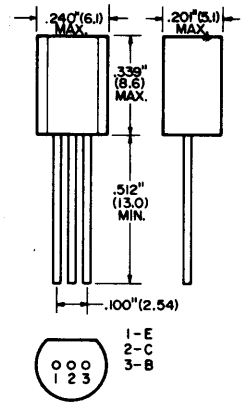

Fig. 31
U-89

ECG
302
306

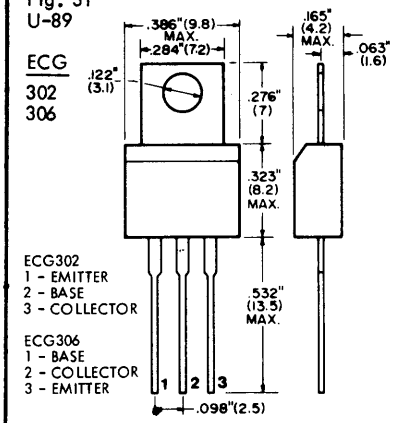

Fig. 32
U-23A

ECG
313

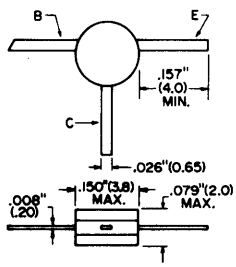

Fig. 33
U-45B

ECG
315
382
383

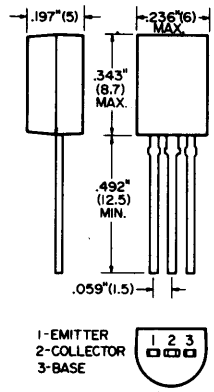

Fig. 34
W-52

ECG
317
318
335

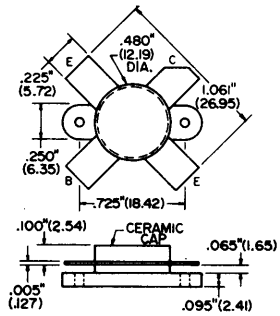

Fig. 35

ECG
320

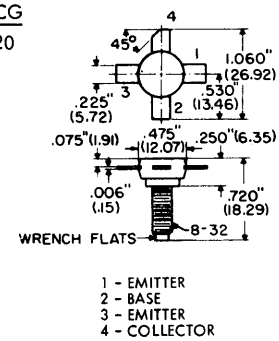

Fig. 36
R-203

ECG	1	2	3
132 •	G	D	S
133 •	G	D	S
312 •	G	S	D

• Alternate Fig. 13

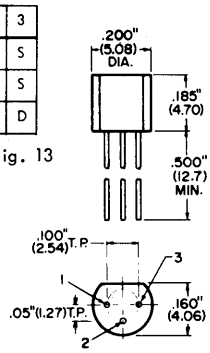

Fig. 37

ECG
341
361

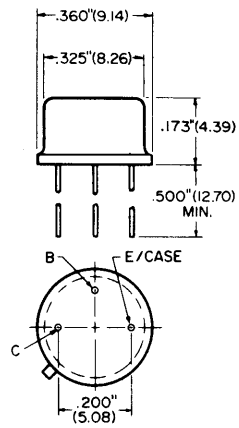

Fig. 38

ECG
347
357

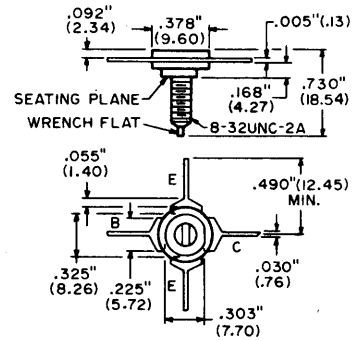

Fig. 39

ECG
352
365
366
367
368

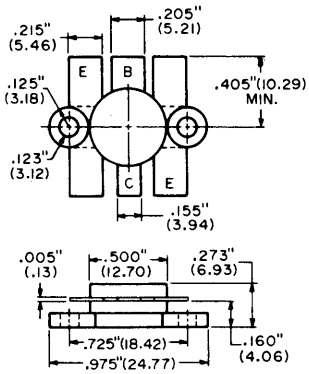

Fig. 40

ECG
362
363
364

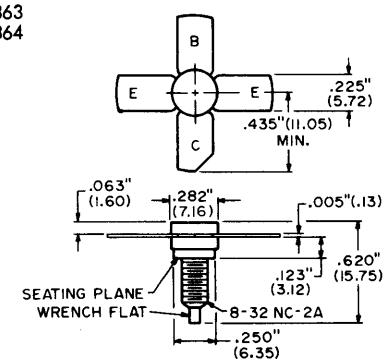

Fig. 41

ECG
342
343

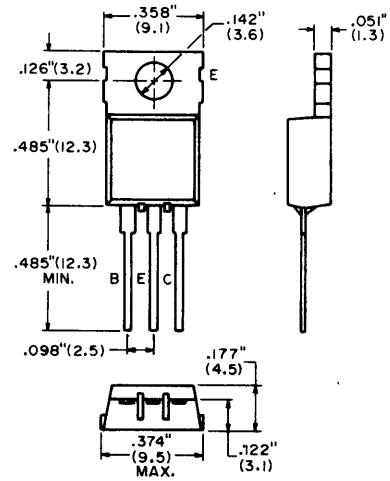

Transistor Outlines (cont'd)

Fig. 42

ECG
344

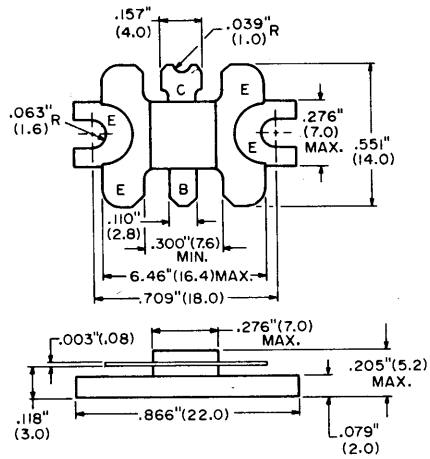

Fig. 43

ECG
353
354
355
356

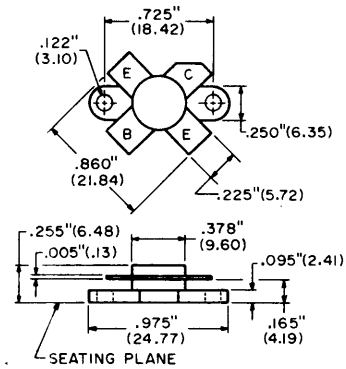

Fig. 44

ECG
380
381

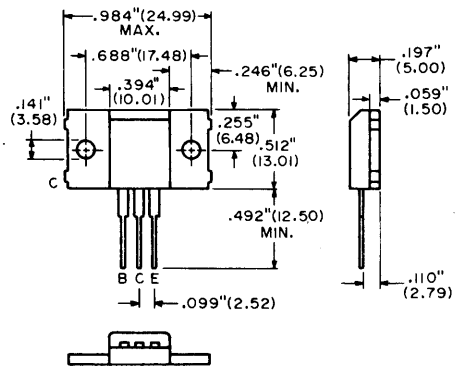

Fig. 45
TO-71

ECG
461

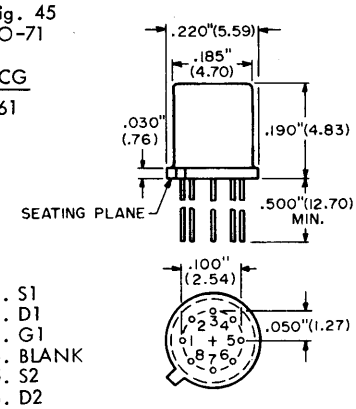

1. S1
2. D1
3. G1
4. BLANK
5. S2
6. D2
7. G2
8. BLANK

Fig. 46
R-67

ECG
453

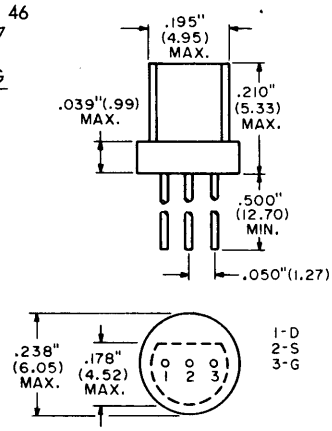

Fig. 47
TO-99

ECG
463

1. S1
2. D1
3. G1
4. BASE, CASE
5. G2
6. D2
7. S2
8. NC

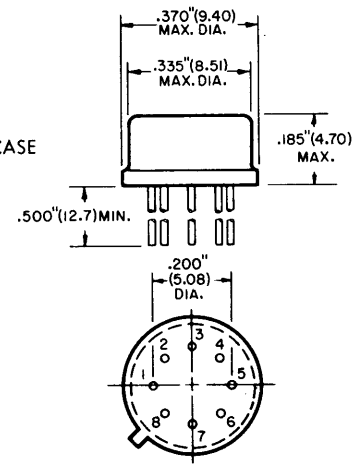

Diodes and Rectifiers

ECG Type	Description		Peak Reverse Voltage PRV Max V	Average Rectified Forward Current I_O Max	Forward Current Repetitive Peak I_{FRM} Max	Reverse Recovery Time trr	Forward Voltage Drop I_{FRM}	AFC	Fast Sw	Gen Purp	HV	Damper	UHF	Package/ Basing
ECG109	Gen Purp, Replaces 1N34A, 1N60, 1N295, etc.	Ge	100	200 mA	--	--	--			●				66
ECG110	Matched Diode Pair, Replaces 1N541, 1N542, etc.	Ge	30	100 μA	--	--	--	●		●				66
ECG112	UHF TV Mixer, Replaces 1N82, 1N82AG, 1S750	Si	5	25 mA	--	--	--						●	66
ECG113A	Common Cathode Dual Diode, TV Horiz AFC, Replaces D4, DO-4, DDO-4, etc.	Si	100	1.5 A	--	--	0.95 V at 1 A	●		●				68
ECG114	Series Dual Diodes, TV Horiz AFC, Replaces D5, DO-5, DDO-5, etc.	Se	20	Min 1.1 mA	--	--	--	●						68
ECG115	Common Anode Dual Diode, TV Horiz AFC, Replaces D6, DO-6, DDO-6, etc.	Se	20	Min 1.1 mA	--	--	--	●						68
ECG116	Gen Purp Rect	Si	600	1 A	--	--	0.8 V at 1 A			●				72
ECG117	Gen Purp Rect, Metal Case	Si	600	1 A	--	--	--			●				70
ECG120	Color TV Convg Rect	Se	18	65 mA	--	--	--			●				71
ECG125	Gen Purp Rect	Si	1000	2.5 A	--	--	0.8 V at 1 A			●				72
ECG156	Gen Purp Rect	Si	1000	3 A	--	--	--			●				69
ECG173BP	TV Damper	Si	5000	300 mA	4 A	4 μs	4.4 V at 500 mA					●		74
ECG174	TV Damper	Ge	270	6 A	10 A	--	0.6 V at 5 A					●		75
ECG177	Fast Sw, Det, etc.	Si	200	160 mA	250 mA	50 ns	1.0 V at 100 mA		●					76
ECG178MP	Matched Diode Pair, AFC, AFT, etc.	Si	50	75 mA	100 mA	--	1.0 V at 5 mA	●						77
ECG506	Damper, Boost, Blanking	Si	1400	1 A	3.5 A	500 ns	--		●			●		89
ECG507	Centering, Gating	Si	50	250 mA	--	3 μs	--			●				89
ECG513	TV HV Stick Rect	Si	45,000	5 mA	200 mA	--	75 V at 50 mA				●			88
ECG515	Trace Commutating, SCR Defl Clamp	Si	800	3 A	9 A	1.3 μs	--		●			●		86
ECG516	TV Damper	Ge	320	10 A	--	--	--					●		85
ECG518	TV Focus Rect	Si	8000	5 mA	--	--	--				●			87
ECG519	Fast Sw Diode	Si	100 (BRV)	200 mA	450 mA	4 ns	1.0 V at 100 mA		●					76
ECG525	Damper, Fast Sw	Si	2000	1 A	-	0.8 μs	2 V at 200 mA		●			●		89
ECG527	TV HV Stick Rect	Si	30,000	2.2 mA	100 mA	--	125 V at 10 mA				●			60
ECG551	Damper, Fast Recovery, Metal Case	Si	1500	1 A	--	1 μs	1.5 V at 2 A		●			●		93
ECG552	Gen Purp Rect, Fast Recovery	Si	600	1 A	--	200 ns	1.5 V at 250 mA		●	●				76

Package/Outlines - See Page 35

Varistors
(Temperature Compensating Diodes)

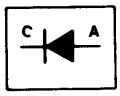

ECG Type	Description	Forward Current I_F mA	Forward Voltage V_F Min. Volts	Forward Voltage V_F Max. Volts	Forward Voltage V_F Change Per °C in mV	Outline No.
ECG600	Silicon	10	0.63 at 3 mA	0.69 at 3 mA	2	66
ECG601	Silicon	20	0.56 at 1.5 mA	0.61 at 1.5 mA	1.5	65
ECG604	Germanium	100	0.145 at 3 mA Typ		2.26	66
ECG605	Silicon	30	1.24 at 1.5 mA	1.34 at 1.5 mA	3.6	67

Varistors (Voltage Compensating Diodes)

ECG Type	Forward Characteristics	Maximum Forward DC Current	Maximum Surge Current for 10m Sec.	Reverse Characteristics	Fig. No.
ECG606	1.8V ± 0.2V at 1 mA 2.3V ± 0.25V at 70 mA	150 mA	27 A	10 μA Max at 100V	94
ECG607	2.35V ± 0.25V at 1 mA 3.0V ± 0.3V at 70 mA	100 mA	25 A	10 μA Max at 100V	94

Varactors
(Variable Capacitance Diodes)

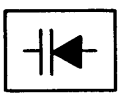

ECG Type	Cap. at 4 Volts pF	Cap. Ratio C2/C30	Reverse Voltage V_R Volts Max.	Forward Current I_F mA Max.	Device Diss. P_D mW Max.	Outline No.
ECG610	6.8	2.7	30	200	280	63
ECG611	10.0	2.9	30	200	280	
ECG612	12.0	2.9	30	200	280	
ECG613	22.0	2.9	30	200	280	
ECG614	33.0	3.2	30	200	280	

Bridge Rectifiers
(Silicon)

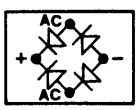

Peak Reverse Volts	I_o Average Rectified Forward Current 1.5 A	2 A	8 A	25 A
100		ECG166	ECG5312	
200		ECG167	ECG5313	ECG5322
400	ECG5304	ECG168	ECG5314	ECG5324
600	ECG5305	ECG169	ECG5315	ECG5326
800	ECG5306		ECG5316	
1000	ECG5307	ECG170		
Outline No.	62	73	61	92

HV Rectifiers (Silicon)

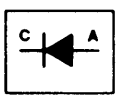

ECG Type	Application	Peak Reverse Volts	Peak Repetitive Forward Current mA	Average Forward Current I_F mA	Forward Voltage Drop V_F	Outline Fig. No.
ECG513	TV HV Rectifier, Replacement for: Electrohome 28-31-00 Motorola 48D69723A01 Zenith 103-215 E.D.I. R12C	45,000	200	5	75 V at 50 mA	88
ECG527	TV HV Rectifier	30,000	100	2.2	125 V at 10 mA	60

HV Rectifiers (Selenium)

ECG Type	Description and Application	Limit Conditions		Operating Conditions			Outline Fig. No.
		PRV No-Load	Peak Input Pulse Volts	DC Output Volts	Peak Input Pulse Volts	Forward Current 50°C ABS Max I_F mA	
ECG118	TV HV Focus Rect	7500	9000	6500	7800	0.5	78
ECG119	TV HV Boost Rect	560	827	--	550	2.2	79
ECG502	TV HV Rect	12,400	14,500	11,000	13,200	0.5	80
ECG503	TV HV Rect	14,400	17,300	13,000	15,600	0.5	82
ECG504	TV HV Rect	19,500	23,400	18,000	21,600	0.5	83
ECG505	TV HV Rect	21,400	25,400	20,000	24,000	0.5	84

Solid-State Replacements for TV HV Rectifiers

ECG Type	Application Replaces Following Tube Types:	Peak Reverse Volts	Peak Repetitive Forward Current mA	Average Forward Current I_F mA	Forward Voltage Drop V_F	Outline Fig. No.
ECG508/R-3A3	3A3, 3AW3, 3B2, 3CA3, 3CN3, 3CU3, 2CN3, 1B3, 1G3, 1K3, 1J3	45,000	110	5	50 V at 5 mA	81
ECG509/R-3AT2	3AT2, 3AW2, 3BL2, 3BM2, 3BN2	45,000	110	5	50 V at 5 mA	81
ECG510/R-3DB3	3DB3, 3DJ3	45,000	110	5	50 V at 5 mA	81
ECG511/R-2AV2	2AV2, 1V2	9,000	100	5	20 V at 5 mA	90
ECG512/R-6DW4	6DW4, 6CK3, 6CL3, 6BA3	6,000	1300	250	10 V at 350 mA	91
ECG514/R-3DS3	3DR3, 3DS3	45,000	110	5	50 V at 5 mA	81

Diode and Rectifier Outlines

Fig. 60

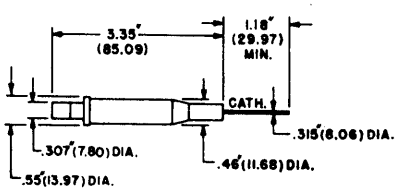

Fig. 61

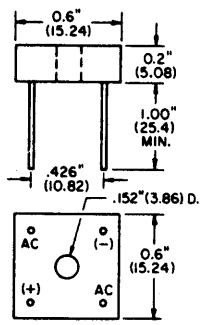

Fig. 62

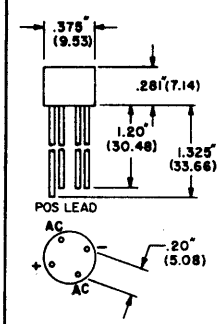

Fig. 63

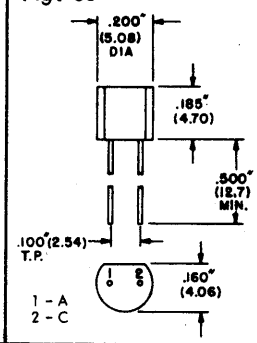

Fig. 64

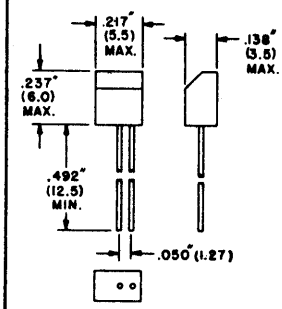

Fig. 65 COLOR END DENOTES CATHODE

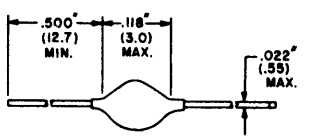

Fig. 66

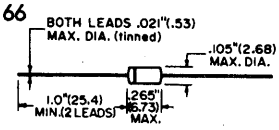

(COLOR BAND DENOTES CATHODE)

Fig. 67

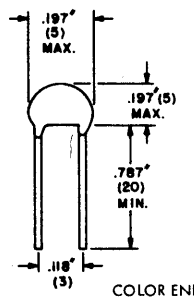

COLOR END DENOTES CATHODE

Fig. 68

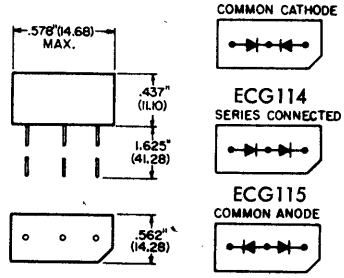

Fig. 69

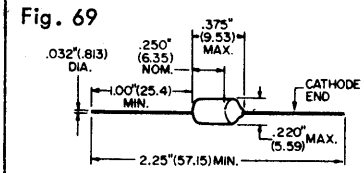

Fig. 70

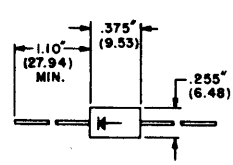

Diode and Rectifier Outlines (cont'd)

Fig. 71

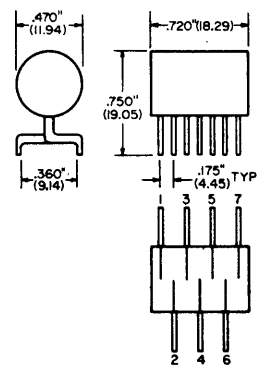

Fig. 72

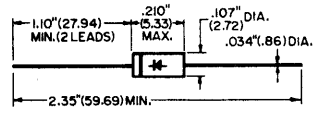

COLOR BAND DENOTES CATHODE

Fig. 73

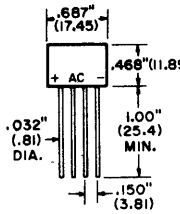

Fig. 74

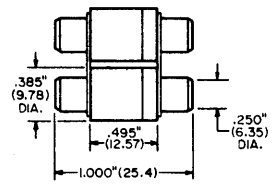

COLOR BAND DENOTES CATHODE

Fig. 75

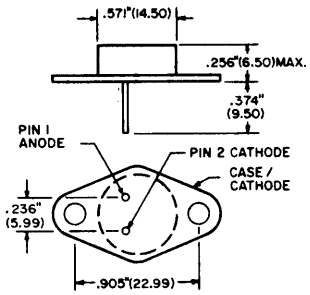

Fig. 76

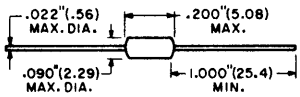

COLOR BAND DENOTES CATHODE

Fig. 77

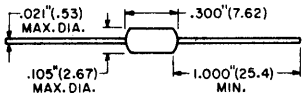

COLOR BAND DENOTES CATHODE

Fig. 78

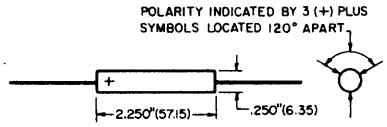

Fig. 79

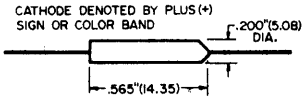

Fig. 80

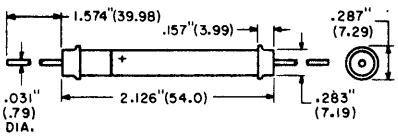

Fig. 81

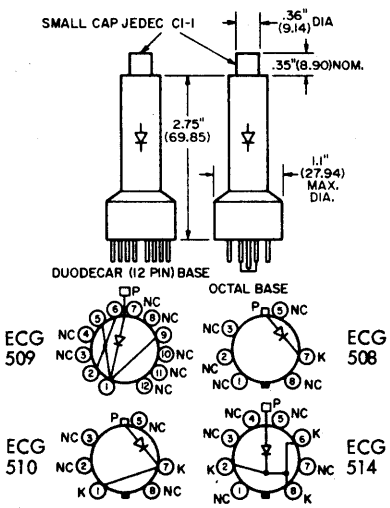

Fig. 82

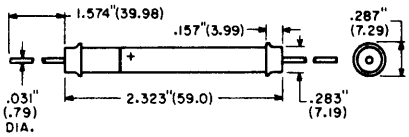

Fig. 83

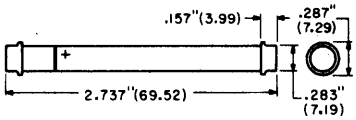

Fig. 84

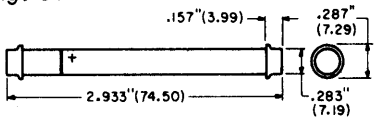

Fig. 85

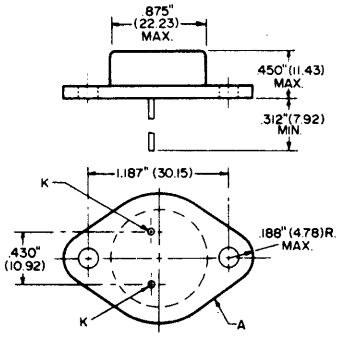

Fig. 86

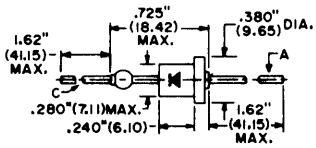

Fig. 87

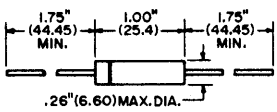

COLOR BAND DENOTES CATHODE

Fig. 88

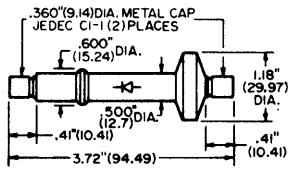

Fig. 89

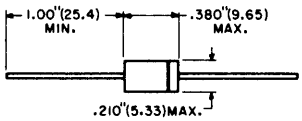

COLOR BAND DENOTES CATHODE

Fig. 90

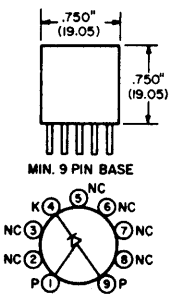

Fig. 91

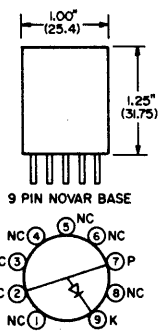

Fig. 92

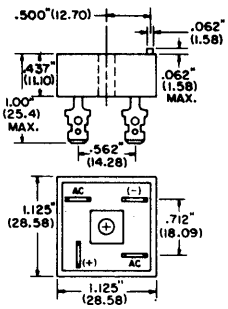

Fig. 93

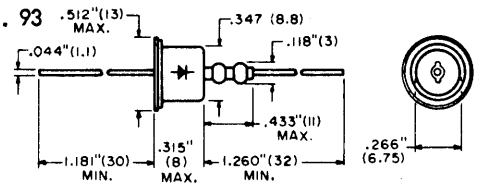

Fig. 94

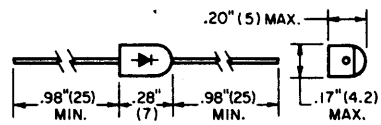

HV Multipliers

ECG Type	Application and Description	Circuit	Outline No.
ECG500	Silicon Tripler, 33 KV Output	A	105
ECG500A	Silicon Tripler, Replaces ECG500, Has Longer Anode Lead - 27 Inches	A	105
ECG501A	Selenium Tripler, 33 KV Output (Includes 2500 pF Internal Focus Capacitor)	B	106
ECG501B	Silicon Tripler, 33 KV Output (Includes 2500 pF Internal Focus Capacitor)	B	117
ECG520	Selenium Tripler with Silicon Damper Diode	C	107
ECG521	Silicon Tripler	A	108
ECG522	Silicon Tripler for Solid-State Drive	D	105
ECG523	Silicon Tripler for Solid-State Drive, Internal Focus Divider Network	E	109
ECG526A	5 Step Tripler	E	110
ECG528	5 Step Tripler, Replaces Zenith 212-145, etc.	F	111
ECG529	5 Step Tripler with Damper Diode, Replaces Magnavox, Quasar and Warwick Parts	G	110

ECG Type	Application and Description	Circuit	Outline No.
ECG530	6 Step Tripler, Replaces Zenith 212-143, etc.	H	110
ECG531	6 Step Tripler, Replaces RCA 1464607-1, etc.	I	112
ECG532	6 Step Tripler, Replaces RCA 1464607-7, etc.	I	112
ECG533	5 Step Tripler with Damper Diode, Replaces RCA 1464607-9, etc.	J	112
ECG534	5 Step Tripler with Damper Diode, Replaces Magnavox 530165-5, etc.	K	113
ECG535	5 Step Tripler with Damper Diode, Replaces Magnavox 530165-14, etc.	L	114
ECG536A	8 Step Quadrupler, Replaces RCA 1463641-1, etc.	M	115
ECG537	5 Step Tripler with Damper Diode, Replaces RCA 1466860-2, etc.	J	112
ECG538	5 Step Tripler with Damper Diode, Replaces Admiral 93D99-2, etc.	N	116
ECG539	5 Step Tripler with Damper Diode, Replaces Admiral 93D99-5, Magnavox 530165-12, etc.	O	117

HV Multiplier Circuits

A. ECG500, ECG500A, ECG521

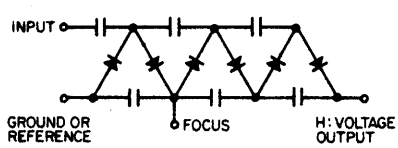

B. ECG501A, ECG501B

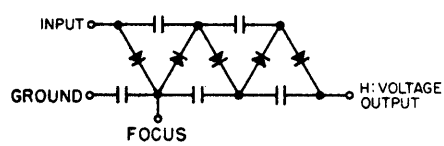

C. ECG520

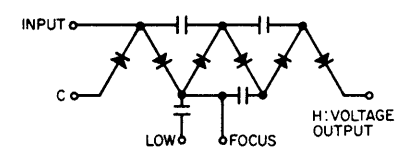

D. ECG522

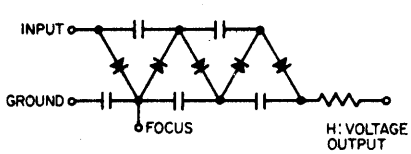

E. ECG523, ECG526A

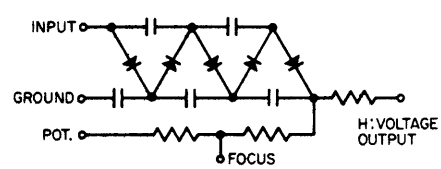

F. ECG528

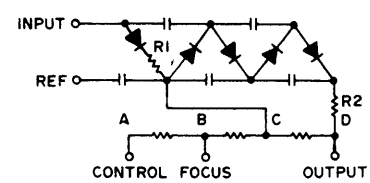

G. ECG529

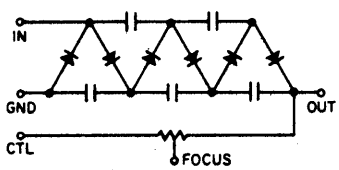

H. ECG530

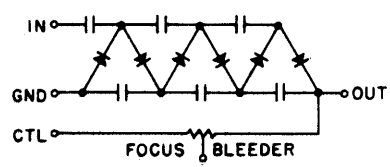

I. ECG531, ECG532

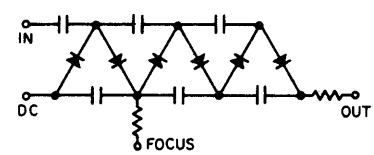

J. ECG533, ECG537

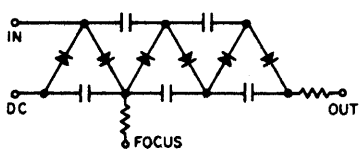

K. ECG534

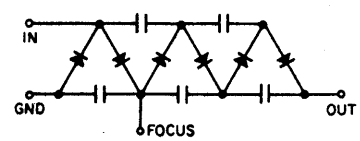

L. ECG535

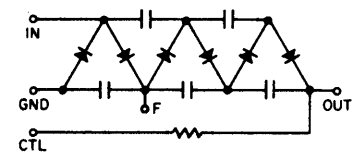

HV Multiplier Circuits (cont'd)

M. ECG536A

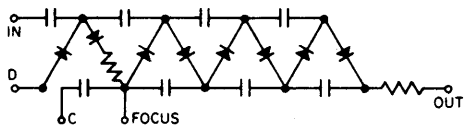

N. ECG538

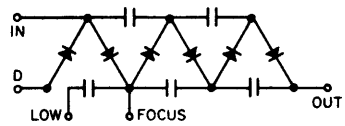

O. ECG539

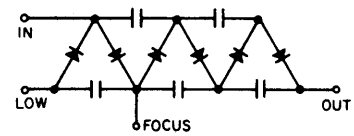

HV Multiplier Outlines

Fig. 105

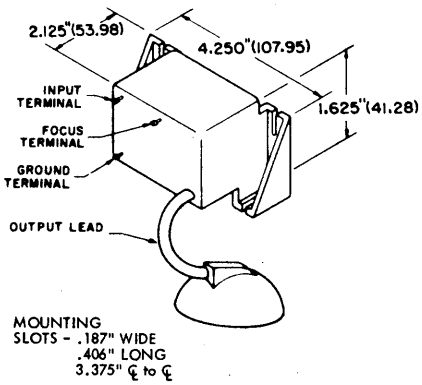

Fig. 106

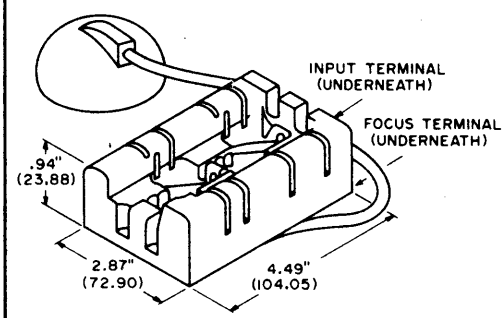

Fig. 107

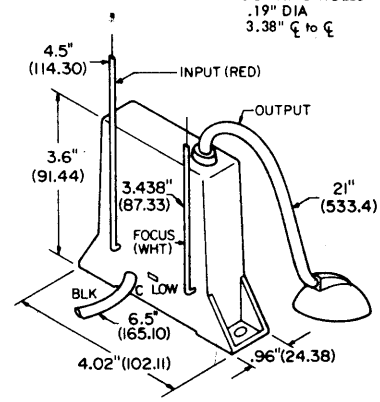

Fig. 108

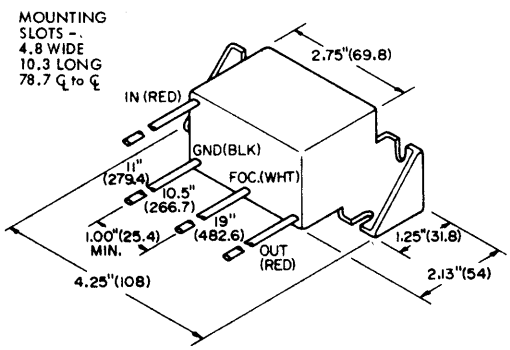

Fig. 109

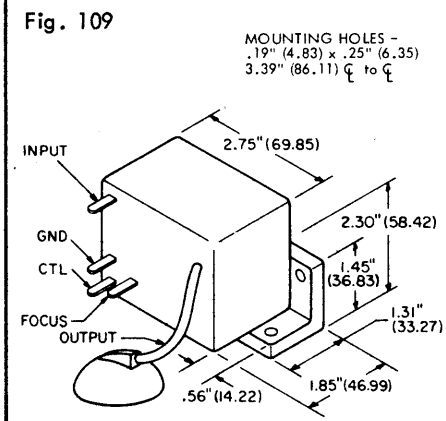

Fig. 110

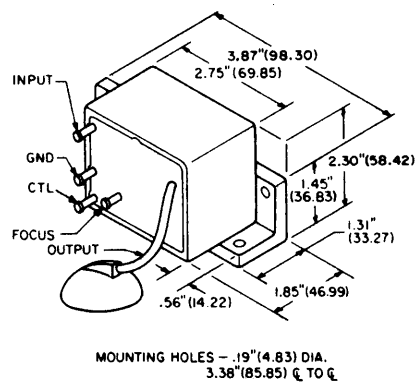

Fig. 111

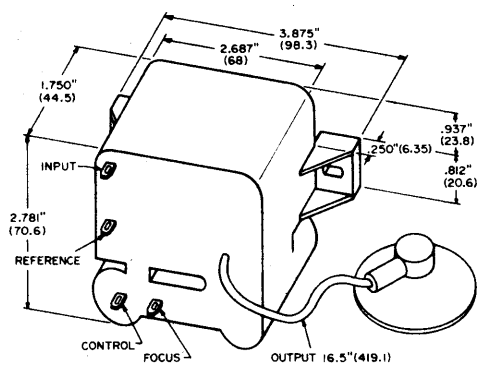

Fig. 112

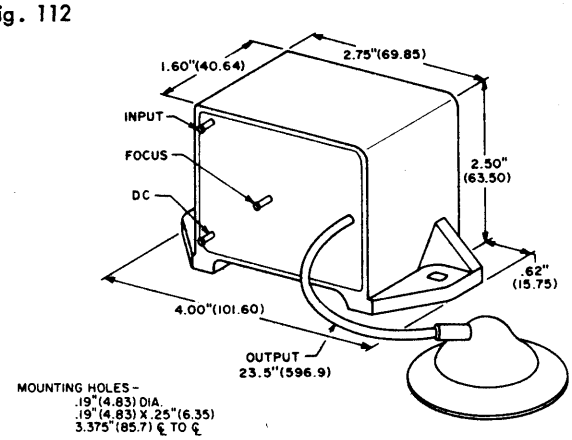

HV Multiplier Outlines (cont'd)

Fig. 113

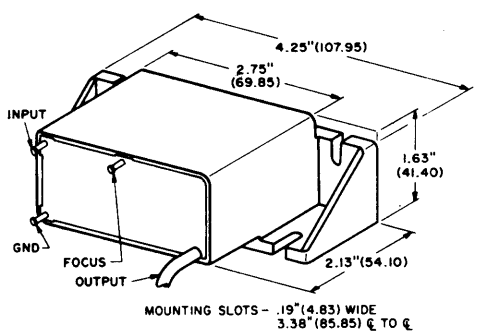

Fig. 114

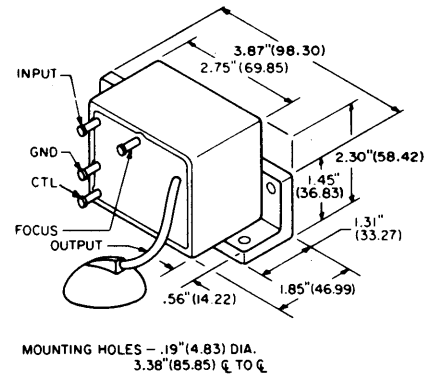

Fig. 115

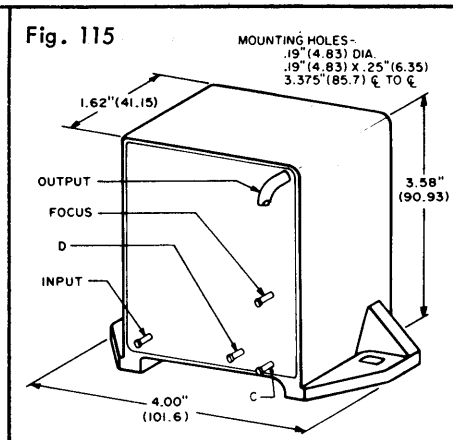

Fig. 116

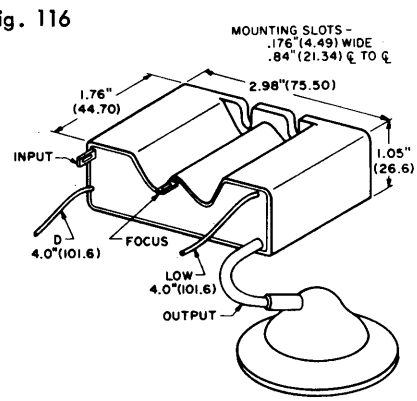

Fig. 117

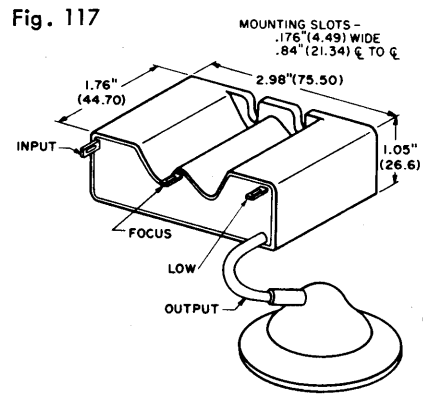

HV Dividers/Focus Assemblies

ECG Type	Application and Description	Outline No.
ECG-HiDiv-1	Resistive High Voltage Divider Assembly: 240 Megohms, tapped at 40 Megohms; Total Dissipation - 4 Watts; 35 KV max.	125
ECG-HiDiv-2	Resistive High Voltage Divider Assembly: 244 Megohms, tapped at 46 Megohms; Total Dissipation - 4 Watts; 35 KV max.	125
ECG-HiDiv-3	Resistive High Voltage Divider Assembly: 240 Megohms, tapped at 40 Megohms; Total Dissipation - 4 Watts; 35 KV max.	126

Fig. 125

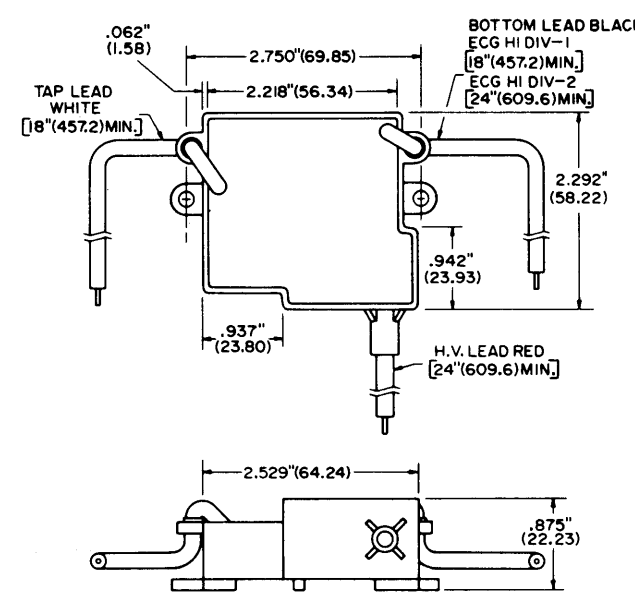

Fig. 126

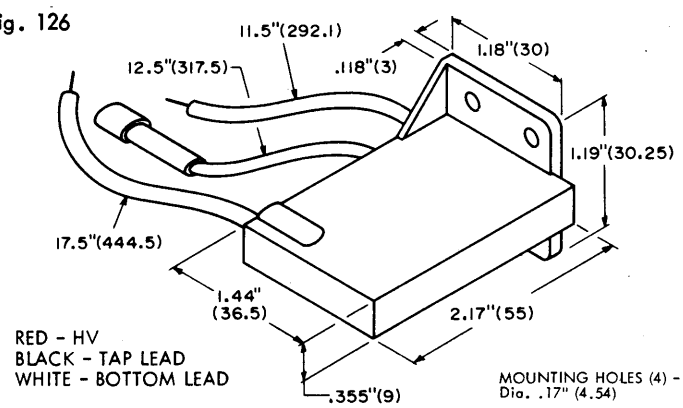

Microwave Oven Rectifiers

ECG Type	Minimum Breakdown Voltage V_B	Maximum Surge Current (Nonrep.) I_{FSM} A	Average Output Current I_O mA	Maximum Forward Voltage Drop V_{FM} V	Maximum Reverse Leakage Current I_{RM} μA	Fig. No.
ECG540	12 kV at 100 μA	25	600 at TC 55°C	---	1.0 at 5 kV	130
ECG541	10 kV at 1.0 mA	50	750 at TA 40°C	8.5 at 750 mA	10 at 5 kV	131
ECG542	15 kV at 10 μA	50	350 at TA 50°C	13.5 at 350 mA	1.0 at 12 kV	132
ECG543	15 kV at 10 μA	50	350 at TA 50°C	13.5 at 350 mA	1.0 at 12 kV	133
ECG544	12 kV at 1.0 mA	25	500 at TA 40°C	12 at 500 mA	10 at 8 kV	134
ECG545	12 kV at 100 μA	25	400 at TC 55°C	---	1.0 at 5 kV	135
ECG546	12 kV at 100 μA	25	400 at TC 55°C	---	1.0 at 5 kV	136
ECG547	12 kV	50	400 at TA 25°C	15 at 100 mA	1.0 at 9 kV	137
ECG548	12 kV at 100 μA	250	750 at TC 50°C	14 at 750 mA.	1.0 at 10 kV	138

Fig. 130

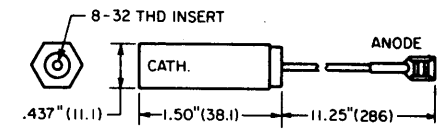

Fig. 131

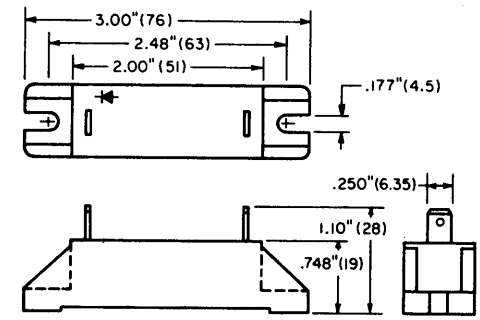

Fig. 132

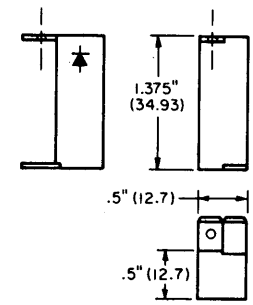

POS. TERMINAL HAS MOUNTING HOLE FOR NO. 8 SCREW

Fig. 133

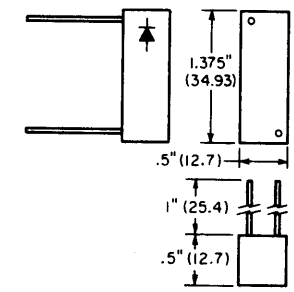

Fig. 134

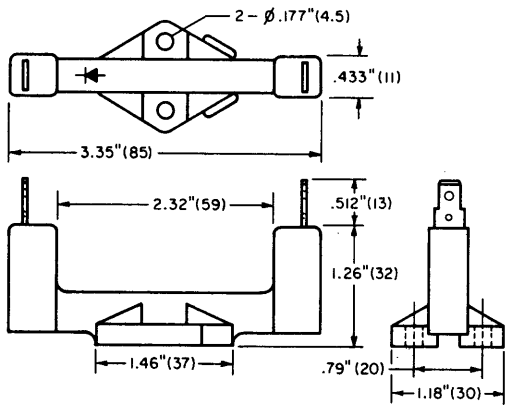

Fig. 135

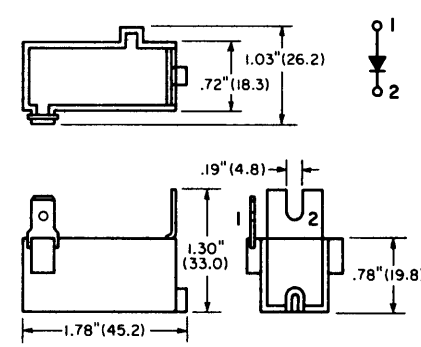

Fig. 136

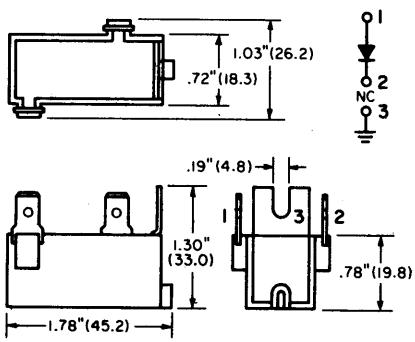

Fig. 137

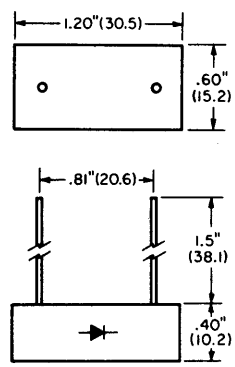

Fig. 138

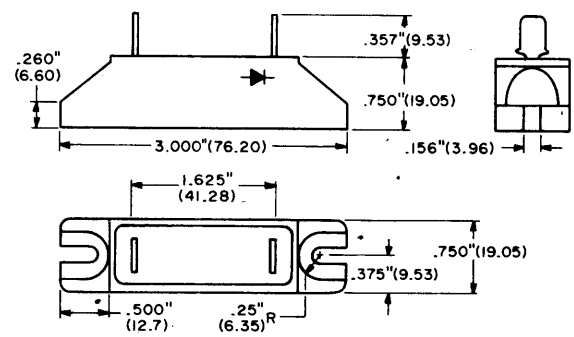

Industrial Rectifiers

Note: Standard polarity is cathode to case.
* Indicates polarity is anode to case.

PRV Volts	Average Rectified Forward Current I_O in Amperes									
	3 A		6 A	6 A/22 A #	12 A	15 A	16 A	20 A	40 A	60 A
50	ECG5800	ECG5830	ECG5850		ECG5870	ECG5940	ECG5892	ECG5912	ECG5980	ECG6020
50		ECG5831*	ECG5851*		ECG5871*	ECG5941*	ECG5893*	ECG5913*	ECG5981*	ECG6021*
100	ECG5801	ECG5832	ECG5852	ECG5812	ECG5872	ECG5942	ECG5894	ECG5914	ECG5982	ECG6022
100		ECG5833*	ECG5853*		ECG5873*	ECG5943*	ECG5895*	ECG5915*	ECG5983*	ECG6023*
200	ECG5802	ECG5834	ECG5854		ECG5874	ECG5944	ECG5896	ECG5916	ECG5986	ECG6026
200		ECG5835*	ECG5855*		ECG5875*	ECG5945*	ECG5897*	ECG5917*	ECG5987*	ECG6027*
300	ECG5803	ECG5836	ECG5856		ECG5876	ECG5946	ECG5898	ECG5918	ECG5988	ECG6030
300		ECG5837*	ECG5857*		ECG5877*	ECG5947*	ECG5899*	ECG5919*	ECG5989*	ECG6031*
400	ECG5804	ECG5838	ECG5858	ECG5814	ECG5878	ECG5948	ECG5900	ECG5920	ECG5990	ECG6034
400		ECG5839*	ECG5859*		ECG5879*	ECG5949*	ECG5901*	ECG5921*	ECG5991*	ECG6035*
500	ECG5805	ECG5840	ECG5860		ECG5880	ECG5950	ECG5902	ECG5922	ECG5992	ECG6038
500		ECG5841*	ECG5861*		ECG5881*	ECG5951*	ECG5903*	ECG5923*	ECG5993*	ECG6039*
600	ECG5806	ECG5842	ECG5862	ECG5815	ECG5882	ECG5952	ECG5904	ECG5924	ECG5994	ECG6040
600		ECG5843*	ECG5863*		ECG5883*	ECG5953*	ECG5905*	ECG5925*	ECG5995*	ECG6041*
800	ECG5808	ECG5846	ECG5866		ECG5886		ECG5908	ECG5928	ECG5998	ECG6042
800		ECG5847*	ECG5867*		ECG5887*		ECG5909*	ECG5929*	ECG5999*	ECG6043*
1000	ECG5809	ECG5848	ECG5868	ECG5817	ECG5890		ECG5910	ECG5932	ECG6002	ECG6044
1000		ECG5849*	ECG5869*		ECG5891*		ECG5911*	ECG5933*	ECG6003*	ECG6045*
I_{FM} Surge	150 A	40 A	150 A	400 A	250 A	250 A	300 A	400 A	500 A	700 A
Operating Temp. (Tj) °C	-65 to +175	-65 to +175	-65 to +190	-65 to +175	-65 to +190	-65 to +175	-65 to +200	-40 to +175	-65 to +180	-65 to +175
Package	Axial	DO-4		Axial	DO-4	DO-5	DO-4		DO-5	
Outline No.	145	146		150	146	147	146		147	

I_O = 6 A with PC Board Mtg., 60°C; I_O = 22 A, 1/8" Leads, TL = 60°C

PRV Volts	Average Rectified Forward Current I_O in Amperes		
	70 A	150 A	300 A
50			
50			
100	ECG6050		
100	ECG6051*		
200	ECG6054		
200	ECG6055*		
300	ECG6058		
300	ECG6059*		
400	ECG6060	ECG6154	ECG6354
400	ECG6061*	ECG6155*	ECG6355*
500			
500			
600	ECG6064	ECG6156	ECG6356
600	ECG6065*	ECG6157*	ECG6357*
800	ECG6068		
800	ECG6069*		
1000	ECG6072	ECG6158	ECG6358
1000	ECG6073*	ECG6159*	ECG6359*
I_{FM} Surge	1200 A		
Operating Temp. (Tj) °C	-40 to +200	Stud -40 to +130	Stud -40 to +130
Package	DO-5	DO-8	DO-9
Outline No.	147	148	149

Fig. 145

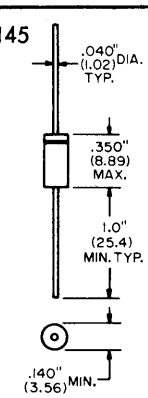

COLOR BAND DENOTES CATHODE

Fig. 146

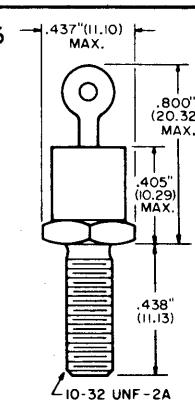

DO-4-Torque To 15 in-lbs. min; 20 in-lbs. max.

Fig. 147

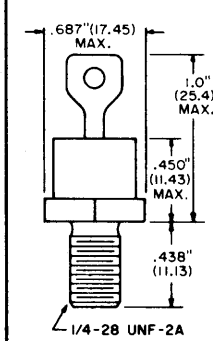

DO-5-Torque To 25 in-lbs. min; 30 in-lbs. max.

Fig. 148

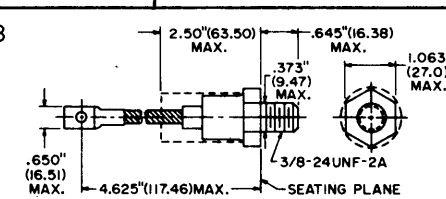

TORQUE TO 90 IN-LBS MIN; 100 IN-LBS MAX

Fig. 149

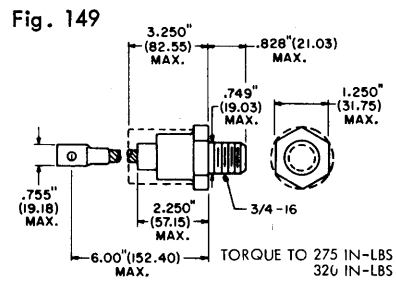

TORQUE TO 275 IN-LBS MIN; 320 IN-LBS MAX

Fig. 150

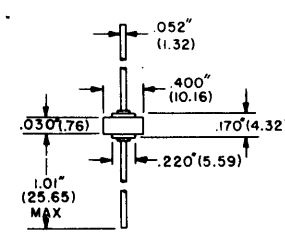

Zener Diodes

NOTE: 10 watt and 50 watt Zeners listed have anode connected to stud. Add suffix letter "K" to the ECG number for cathode connected to stud. The ECG type numbers shown have a standard tolerance for the Zener voltage of ± 5%.

Voltage (See Note for Tolerance)	Axial Lead			Stud Mount	
				DO-4	DO-5
	Outline No. 155		156	157	158
	1/2 Watt	1 Watt	5 Watt	10 Watt	50 Watt
2.4	ECG5000A	ECG5061A	--	--	--
2.5	ECG5001A	ECG5062A	--	--	--
2.7	ECG5002A	ECG5063A	--	--	--
2.8	ECG5003A	ECG5064A	--	--	--
3.0	ECG5004A	ECG5065A	--	--	--
3.3	ECG5005A	ECG5066A	ECG5111A	ECG5172A	--
3.6	ECG5006A	ECG134A	ECG5112A	ECG5173A	--
3.9	ECG5007A	ECG5067A	ECG5113A	ECG5174A	ECG5240A
4.3	ECG5008A	ECG5068A	ECG5114A	ECG5175A	ECG5241A
4.7	ECG5009A	ECG5069A	ECG5115A	ECG5176A	ECG5242A
5.1	ECG5010A	ECG135A	ECG5116A	ECG5177A	ECG5243A
5.6	ECG5011A	ECG136A	ECG5117A	ECG5178A	ECG5244A
6.0	ECG5012A	ECG5070A	ECG5118A	ECG5179A	ECG5245A
6.2	ECG5013A	ECG137A	ECG5119A	ECG5180A	ECG5246A
6.8	ECG5014A	ECG5071A	ECG5120A	ECG5181A	ECG5247A
7.5	ECG5015A	ECG138A	ECG5121A	ECG5182A	ECG5248A
8.2	ECG5016A	ECG5072A	ECG5122A	ECG5183A	ECG5249A
8.7	ECG5017A	ECG5073A	ECG5123A	ECG5184A	ECG5250A
9.1	ECG5018A	ECG139A	ECG5124A	ECG5185A	ECG5251A
10.0	ECG5019A	ECG140A	ECG5125A	ECG5186A	ECG5252A
11.0	ECG5020A	ECG5074A	ECG5126A	ECG5187A	ECG5253A
11.5	--	ECG141A	--	--	--
12.0	ECG5021A	ECG142A	ECG5127A	ECG5188A	ECG5254A
13.0	ECG5022A	ECG143A	ECG5128A	ECG5189A	ECG5255A
14.0	ECG5023A	ECG144A	ECG5129A	ECG5190A	ECG5256A
15.0	ECG5024A	ECG145A	ECG5130A	ECG5191A	ECG5257A
16.0	ECG5025A	ECG5075A	ECG5131A	ECG5192A	ECG5258A
17.0	ECG5026A	ECG5076A	ECG5132A	ECG5193A	ECG5259A
18.0	ECG5027A	ECG5077A	ECG5133A	ECG5194A	ECG5260A
19.0	ECG5028A	ECG5078A	ECG5134A	ECG5195A	ECG5261A
20.0	ECG5029A	ECG5079A	ECG5135A	ECG5196A	ECG5262A
22.0	ECG5030A	ECG5080A	ECG5136A	ECG5197A	ECG5263A
24.0	ECG5031A	ECG5081A	ECG5137A	ECG5198A	ECG5264A
25.0	ECG5032A	ECG5082A	ECG5138A	ECG5199A	ECG5265A
27.0	ECG5033A	ECG146A	ECG5139A	ECG5200A	ECG5266A
28.0	ECG5034A	ECG5083A	ECG5140A	ECG5201A	ECG5267A
30.0	ECG5035A	ECG5084A	ECG5141A	ECG5202A	ECG5268A
33.0	ECG5036A	ECG147A	ECG5142A	ECG5203A	ECG5269A
36.0	ECG5037A	ECG5085A	ECG5143A	ECG5204A	ECG5270A
39.0	ECG5038A	ECG5086A	ECG5144A	ECG5205A	ECG5271A
43.0	ECG5039A	ECG5087A	ECG5145A	ECG5206A	ECG5272A
45.0	--	--	--	ECG5207A	ECG5273A
47.0	ECG5040A	ECG5088A	ECG5146A	ECG5208A	ECG5274A
50.0	--	--	--	ECG5209A	ECG5275A
51.0	ECG5041A	ECG5089A	ECG5147A	ECG5210A	ECG5276A
52.0	--	--	--	ECG5211A	ECG5277A
55.0	--	ECG148A	--	--	--
56.0	ECG5042A	ECG5090A	ECG5148A	ECG5212A	ECG5278A
60.0	ECG5043A	ECG5091A	ECG5149A	ECG5213A	ECG5279A
62.0	ECG5044A	ECG149A	ECG5150A	ECG5214A	ECG5280A
68.0	ECG5045A	ECG5092A	ECG5151A	ECG5215A	ECG5281A
75.0	ECG5046A	ECG5093A	ECG5152A	ECG5216A	ECG5282A
82.0	ECG5047A	ECG150A	ECG5153A	ECG5217A	ECG5283A
87.0	ECG5048A	ECG5094A	ECG5154A	ECG5218A	--
91.0	ECG5049A	ECG5095A	ECG5155A	ECG5219A	ECG5284A
100.0	ECG5050A	ECG5096A	ECG5156A	ECG5220A	ECG5285A
105.0	--	--	--	ECG5221A	ECG5286A
110.0	ECG5051A	ECG151A	ECG5157A	ECG5222A	ECG5287A
120.0	ECG5052A	ECG5097A	ECG5158A	ECG5223A	ECG5288A
130.0	ECG5053A	ECG5098A	ECG5159A	ECG5224A	ECG5289A
140.0	ECG5054A	ECG5099A	ECG5160A	ECG5225A	ECG5290A
150.0	ECG5055A	ECG5100A	ECG5161A	ECG5226A	ECG5291A
160.0	ECG5056A	ECG5101A	ECG5162A	ECG5227A	ECG5292A
170.0	ECG5057A	ECG5102A	ECG5163A	ECG5228A	--
175.0	--	--	-	ECG5229A	ECG5293A
180.0	ECG5058A	ECG5103A	ECG5164A	ECG5230A	ECG5294A
190.0	ECG5059A	ECG5104A	ECG5165A	ECG5231A	ECG5295A
200.0	ECG5060A	ECG5105A	ECG5166A	ECG5232A	ECG5296A

Fig. 155

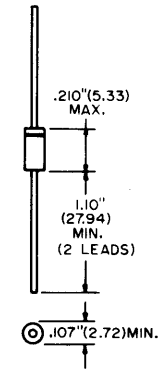

COLOR BAND DENOTES CATHODE

Fig. 156

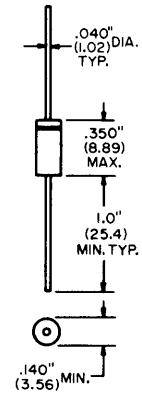

COLOR BAND DENOTES CATHODE

Fig. 157

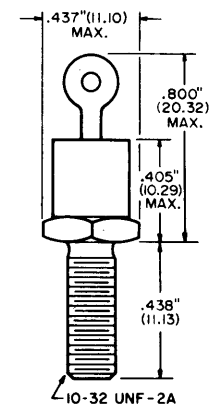

DO-4-Torque To 15 in-lbs.min; 20 in-lbs. max.

Fig. 158

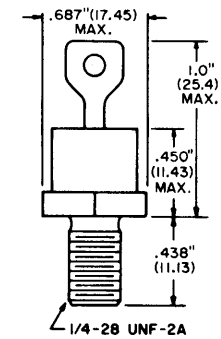

DO-5-Torque To 25 in-lbs. min; 30 in-lbs. max.

Silicon Controlled Rectifiers (SCR)

V_{DRM} DC or Pk Volts	I_T RMS Max Forward Current (All Conduction Angles) Amperes										
	0.8 A	4.0 A				5.0 A		8.0 A			10 A
25										ECG5480	
30	ECG5400	ECG5411	ECG5421	ECG5431	ECG5452						
50					ECG5453	ECG5470		ECG5442	ECG5461	ECG5481	
60	ECG5401	ECG5412	ECG5422	ECG5432							
100	ECG5402	ECG5413	ECG5423	ECG5433	ECG5454	ECG5471			ECG5462	ECG5482	ECG5491
150	ECG5403										
200	ECG5404	ECG5414			ECG5455	ECG5472	ECG5511	ECG5444	ECG5463	ECG5483/ ECG122	ECG5492
250											
300					ECG5456	ECG5473				ECG5484	
400	ECG5405	ECG5415			ECG5457	ECG5474	ECG5512	ECG5446	ECG5465	ECG5485	ECG5494
500						ECG5475				ECG5486	
600	ECG5406	ECG5416				ECG5476	ECG5513	ECG5448	ECG5466	ECG5487	ECG5496
700											
800											
IGT Max	200 μA #	200 μA #	200 μA #	500 μA #	200 μA #	10 mA	15 mA	30 mA	25 mA	20 mA	15 mA
VGT Max (V)	0.8	1.0	1.0	1.0	0.8	3.0	2.0	1.5	1.5	1.5	2.0
I Surge Max (A)	6.0	25	30	20	20	25	60	80	90	100	100
I Hold Max (mA)	5.0	5.0	3.0	5.0	3.0	25	20	25	30	25	20
VGFM (V)	8.0	6.0	6.0	6.0	6.0	6.0	10	6.0	10	10	10
VGRM (V)	8.0	6.0	6.0	6.0	6.0	6.0	5.0	6.0	5.0	10	10
VF on (V)	1.7	2.0	2.2	2.6	2.2	2.0	2.8	1.5	1.83	1.3	2.5
Package	TO-92	X-58	X58A		X51	TO-64 10-32 Stud	TO-66	X58A	TO-220	TO-64 10-32 Stud	TO-48 1/4-28 Stud
Outline No.	168	169	170		171	172	173	170	174	172	175

Return Gate to Cathode through 1000 ohms minimum.

V_{DRM} DC or Pk Volts	I_T RMS Max Forward Current (All Conduction Angles) Amperes						
	16A	20A	25 A		35 A		
25	ECG5500		ECG5520		ECG5540		
30							
50	ECG5501		ECG5521	ECG5550	ECG5541		
60							
100	ECG5502		ECG5522		ECG5542		
150	ECG5503		ECG5523				
200	ECG5504	ECG5514	ECG5524	ECG5552	ECG5543	ECG5517	ECG5562
250	ECG5505		ECG5525				
300	ECG5506		ECG5526		ECG5544		
400	ECG5507	ECG5515	ECG5527	ECG5554	ECG5545	ECG5518	ECG5564
500	ECG5508		ECG5528		ECG5546		
600		ECG5516	ECG5529	ECG5556	ECG5547	ECG5519	ECG5566
700			ECG5530				
800			ECG5531	ECG5558			
IGT Max	25 mA	15 mA	40 mA	40 mA	40 mA	40 mA	40 mA
VGT Max (V)	2.5	2.0	2	1.5	1.5	2.0	1.6
I Surge Max (A)	125	200	150	300	325	350	350
I Hold Max (mA)	10	20	20	40	50	50	50
VGFM (V)	10	10	10	10	10	10	10
VGRM (V)	5	5.0	5	10	10	10	--
VF on (V)	2.5	2.4	2.0	1.8	1.5	1.85	1.4
Package	TO-48 1/4-28 Stud	Press Fit	TO-48 1/4-28 Stud	TO-220	TO-48 1/4-28 Stud	Press Fit	Isolated Stud 1/4-28
Outline No.	175	176	175	174	175	176	177

Silicon Controlled Rectifiers (cont'd)

ECG Type	Description and Application	V_{DRM} Volts	I_TRMS Amps	I_{TSM} Amps	V_{GT} Max. mA	I_{GT} Max. mA	t off Max. μsec	trr Max. μsec	Package and Basing	
									Case	Fig. No.
ECG230	Trace SCR, TV Horiz Defl	600	5	80	4	30	2.5	--	TO-66	173
ECG231	Retrace SCR, TV Horiz Defl	500	7.5	80	4	40	4.3	--	TO-66	173
ECG276	Horizontal Output, TV	1250	5	80	1.5	75	0.3	1.5	MD-17	165
ECG279	Horizontal Output, TV	350	0.8	3	1.5	0.38	--	--	TO-39	166
ECG314	Power Regulating, Switch, TV Horizontal	400	6.4 (I_H 10 mA Typ)	50	2.5	25	25	3 Typ	TO-3	167

Silicon Controlled Rectifier Outlines

Fig. 165

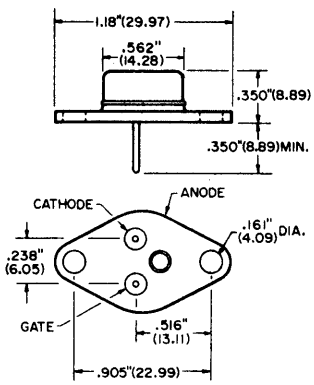

Fig. 166

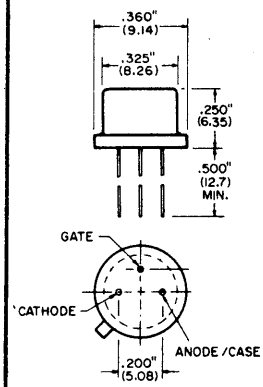

Fig. 167

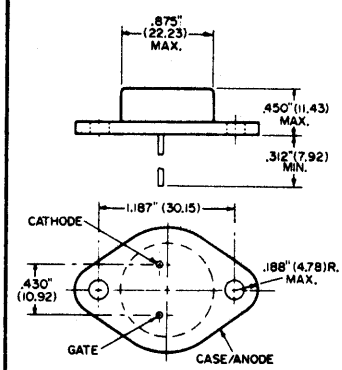

Fig. 168

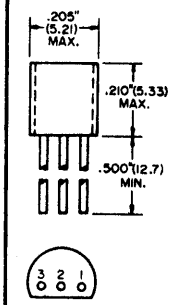

PIN 1. CATHODE (K)
2. GATE (G)
3. ANODE (A)

Fig. 169

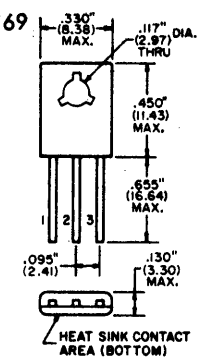

PIN 1. CATHODE (K)
2. ANODE (A) - HEAT SINK AREA
3. GATE (G)

Fig. 170

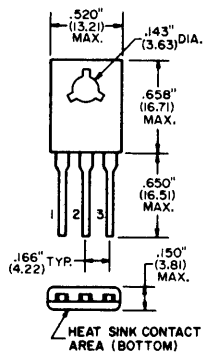

PIN 1. CATHODE (K)
2. ANODE (A) - HEAT SINK AREA
3. GATE (G)

Fig. 171

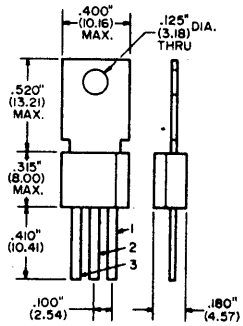

PIN 1. GATE LEAD ADJACENT TO CHAMFER
2. ANODE
3. CATHODE

TAB DIRECTLY CONNECTED TO CENTER LEAD (ANODE) INTERNALLY

Fig. 172

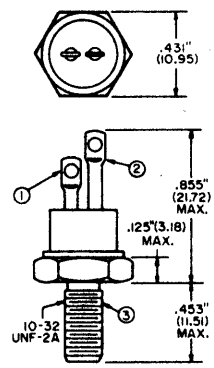

PIN 1. GATE (G)
2. CATHODE (K)
3. ANODE (A)

Torque to 12 in-lbs min; 15 in-lbs max

Fig. 173

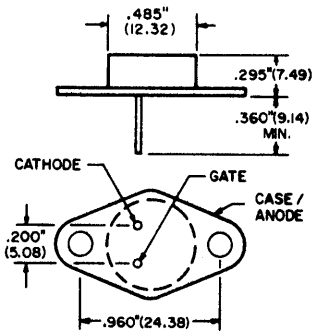

Fig. 174

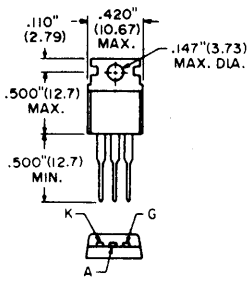

MOUNTING TAB - ELECTRICALLY COMMON TO ANODE

Fig. 175

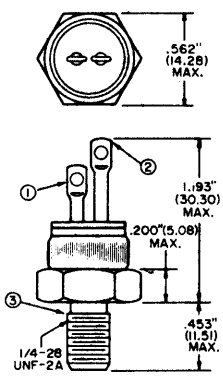

PIN 1. GATE (G)
2. CATHODE (K)
3. ANODE (A)

Torque to 25 in-lbs min; 30 in-lbs max

Fig. 176

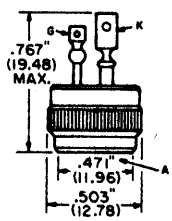

Fig. 177

1. CATHODE (K)
2. GATE (G)
3. ANODE (A)

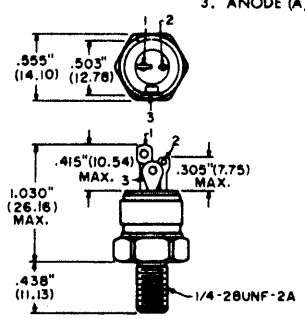

TRIACS

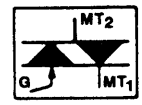

V_{RRM} DC or Pk Volts	I_TRMS Max. Forward Current (All Conduction Angles) Amperes						
	2.5 A		4 A	10 A			
25			ECG5600	ECG5611	ECG5621		ECG5660
50			ECG5601	ECG5612	ECG5622	ECG5631	ECG5661
100	ECG5640	ECG5650	ECG5602	ECG5613	ECG5623	ECG5632	ECG5662
200	ECG5641	ECG5651	ECG5603	ECG5614	ECG5624	ECG5633	ECG5663
300			ECG5604	ECG5615	ECG5625	ECG5634	ECG5664
400	ECG5642	ECG5652	ECG5605	ECG5616	ECG5626	ECG5635	ECG5665
500			ECG5606	ECG5617	ECG5627	ECG5636	ECG5666
600	ECG5643		ECG5607	ECG5618	ECG5628		ECG5667
800							
I_{GT} (mA)	5/10 Typ 25/40 Max	1 Typ 3 Max	30 Max	50/75 Max	50 Max	50 Max	30 Max
V_{GT} (V)	0.9 Typ 2.2 Max	2.2 Max	1.4 Typ 2.5 Max	2.5 Max	2.0 Max	2.5 Max	0.9 Typ 2.0 Max
V_F(on) (V)	1.8 Max	1.7 Typ 2.2 Max	1.4 Typ 2.0 Max	1.3 Typ 1.8 Max	1.3 Typ 1.8 Max	1.65 Max	1.3 Typ 1.8 Max
I_{Surge} (A)	25 Max	25 Max	30 Max	100 Max	100 Max	100 Max	100 Max
I_{Hold} (mA)	6 Typ 35 Max	2 Typ 5 Max	30 Max	10 Typ 50 Max	10 Typ 50 Max	50 Max	10 Typ 30 Max
Operating Temp. (T_j) °C	-65 to +100	-40 to +90	-40 to +110	-65 to +100	-40 to +100	-40 to +100	-40 to +100
Package	TO-5		X58	X-58A		TO-220	TO-64
Outline No.	180		181	182		183	184
Firing Quads	I, II, III, IV		I, III	I, II, III, IV	I, III	I, II, III	I, II, III, IV

V_{RRM} DC or Pk Volts	I_TRMS Max. Forward Current (All Conduction Angles) Amperes					
	15 A		25 A		40 A	
25			ECG5680			
50			ECG5681			
100			ECG5682			
200	ECG5673	ECG56004	ECG5683		ECG5693	ECG56022
300			ECG5684			
400	ECG5675	ECG56006	ECG5685	ECG56014	ECG5695	ECG56024
500	ECG5676		ECG5686			
600	ECG5677	ECG56008			ECG5697	ECG56026
800		ECG56010				
I_{GT} (mA)	50/80 Max	50/75 Max	75/100 Max	100 Max	50/80 Max	50/80 Max
V_{GT} (V)	1.0 Typ 2.5 Max	1.0 Typ 2.5 Max	1.0 Typ 3.0 Max	1.3 Typ 2.5 Max	1.35 Typ 2.5 Max	1.35 Typ 2.5 Max
V_F (on) (V)	1.4 Typ 1.8 Max	1.3 Typ 1.6 Max	1.3 Typ 1.9 Max	-- --	1.7 Typ 2.0 Max	-- --
I_{Surge} (A)	100 Max	150 Max	225 Max	250 Max	300 Max	300 Max
I_{Hold} (mA)	20 Typ 75 Max	40 Max	10 Typ 75 Max	10 Typ 75 Max	25 Typ 60 Max	25 Typ 60 Max
Operating Temp. (T_j) °C	-65 to +100	-40 to +125	-40 to +100	-0 to +125	-65 to +110	-65 to +110
Package	TO-48	TO-220	TO-48	--	TO-48	Isolated Stud
Outline No.	185	183	185	186	185	187
Firing Quads	I, II, III, IV					

TRIAC Outlines

Fig. 180

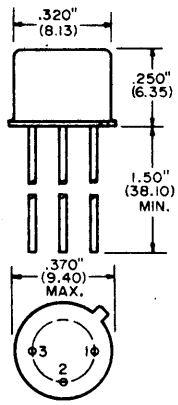

PIN 1. MAIN TERMINAL 1 (MT_1)
2. GATE (G)
3. MAIN TERMINAL 2 (MT_2)

Fig. 181

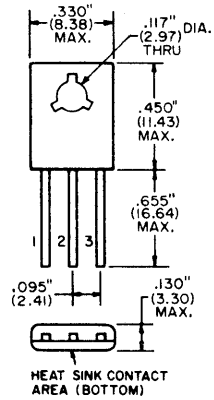

PIN
1. MAIN TERMINAL 1 (MT_1)
2. MAIN TERMINAL 2 (MT_2) - HEAT SINK AREA
3. GATE (G)

Fig. 182

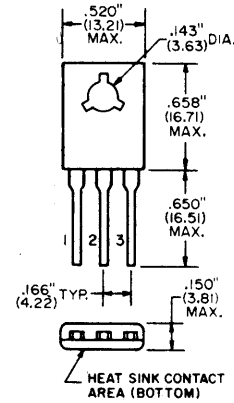

PIN
1. MAIN TERMINAL 1 (MT_1)
2. MAIN TERMINAL 2 (MT_2) - HEAT SINK AREA
3. GATE (G)

Fig. 183

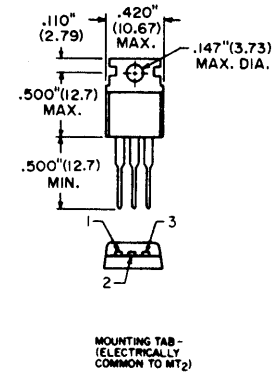

PIN 1. MAIN TERMINAL 1 (MT_1)
2. MAIN TERMINAL 2 (MT_2)
3. GATE (G)

Fig. 184

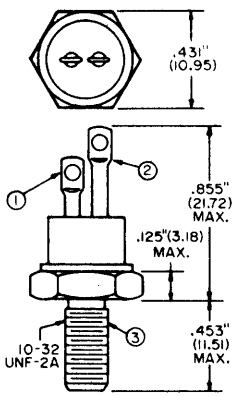

PIN 1. GATE (G)
2. MAIN TERMINAL 1 (MT_1)
3. MAIN TERMINAL 2 (MT_2)

Torque to 12 in-lbs min;
15 in-lbs max

Fig. 185

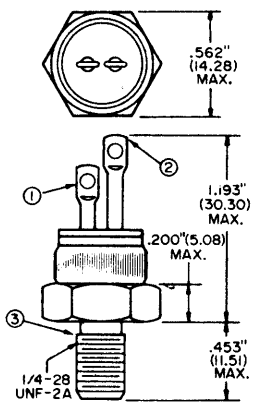

PIN 1. GATE (G)
2. MAIN TERMINAL 1 (MT_1)
3. MAIN TERMINAL 2 (MT_2)

Torque to 25 in-lbs min;
30 in-lbs max

Fig. 186

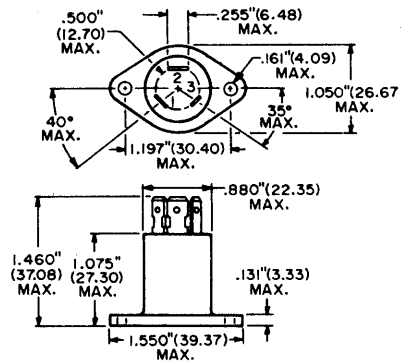

1. MT1
2. MT2
3. GATE

Fig. 187

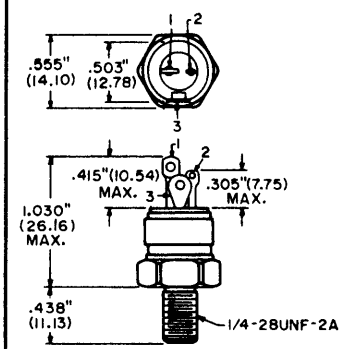

PIN
1. MT 1
2. GATE
3. MT 2

Integrated Thyristors and Rectifiers

ECG Type	Applications	Characteristics/Ratings	Package/ Basing
ECG308	TV Horizontal Deflection and Commutating Switch	Vdsom 750 V, Itrms 5 Amps, Itsm 50 Amps, di/dt 200 A/U sec., I^2t 6 A^2 sec.	TO-66 Fig. 190
ECG310	TV Horizontal Deflection and Trace Switch	Vdsom 800 V, Itrms 5 Amps, Itsm 50 Amps, di/dt 200 A/U sec., I^2t 6 A^2 sec.	TO-66 Fig. 190

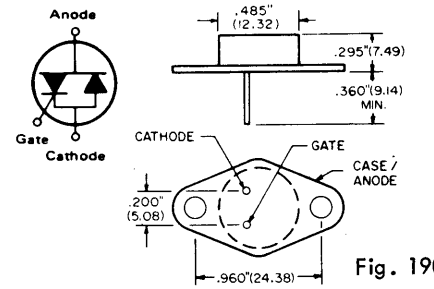

Fig. 190

Special Purpose Devices

Silicon Unijunction Transistors (UJT)

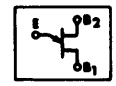

ECG Type	I_E mA	η Min	η Max	R_{BBO} (Kohms) Min	R_{BBO} (Kohms) Max	Inter-Base Volts	P_D mW	I_{EO} μ Amps	I_V (Min) mA	Package/ Basing
ECG6400	50	0.47	0.80	4	12	35	450	1 Typ 12 Max	8	TO-5 Fig. 191
ECG6401	50	0.56	0.75	4.7	9.1	35	300	0.05 Typ	4	TO-18 Fig. 192
ECG6409	50	0.68	0.82	4.7	9.1	35	300	0.01 Typ	8	TO-18 Fig. 192

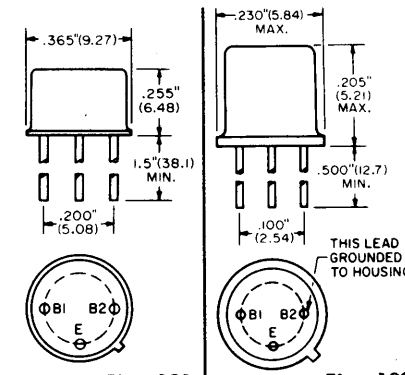

Fig. 191 Fig. 192

Programmable Unijunction Transistor (PUT)

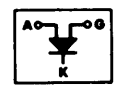

ECG Type	Forward Anode Current I_T mA	Gate Current I_G mA	BV_{GKF} Volts	BV_{GKR} Volts	V_{AKR} Volts	P_D mW	Package/ Basing
ECG6402	150 (2 A Pk)	± 20	40	-5	± 40	300	Fig. 193

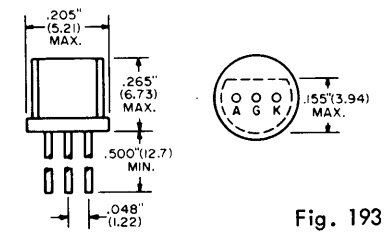

Fig. 193

Silicon Bilateral Switch (SBS)

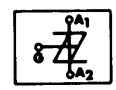

ECG Type	I_{FM} Rep Amps	I_F Max mA	V_S Volts	I_S Max μA	I_H mA	P_D mW	Package/ Basing
ECG6403	1.0	175	6 Min 10 Max	500	1.5	300	Fig. 194

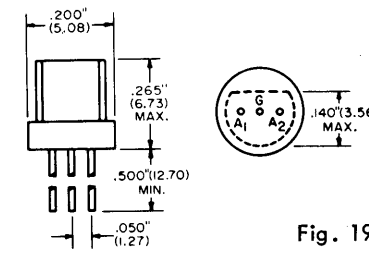

Fig. 194

Silicon Unilateral Switch (SUS)

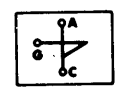

ECG Type	I_{FM} Rep Amps	I_F Max mA	V_S Volts	I_S Max μA	I_H mA	P_D mW	Package/ Basing
ECG6404	1.0	175	6 Min 10 Max	500	1.5	300	Fig. 195

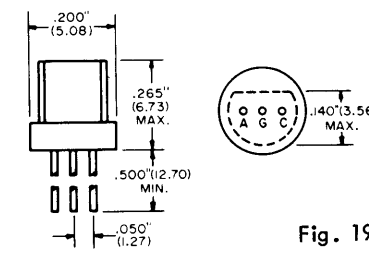

Fig. 195

Silicon Asymmetrical Switch (SAS)

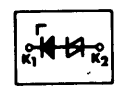

ECG Type	I_{FM} Rep Amps	I_F Max mA	V_S Volts	I_S Max μA	Output Pulse Volts	P_D mW	Package/ Basing
ECG6405	0.5	200	VS1, 14 to 18 VS2, 7 to 9	80	3.5 Min	350	Fig. 196

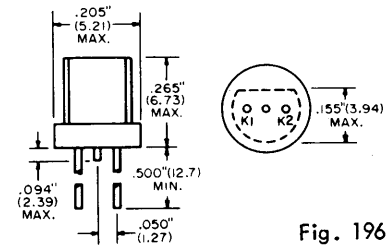

Fig. 196

Silicon Controlled Switch (SCS)

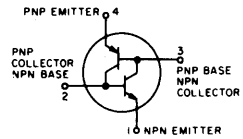

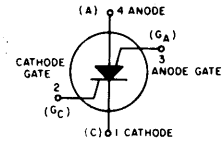

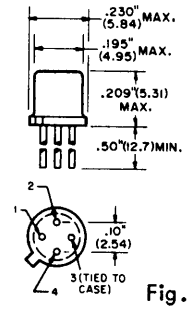

Fig. 197

ECG Type		BV_{CBO} Volts	BV_{EBO} Volts	BV_{CER} (10K) Volts	H_{FE} Min	I_{GT} Max mA	V_{GT} Max Volts	I_T Max mA	I_T Pk Max mA	I_{TSM} Max mA	I_H Max mA	P_D Max mW	Package/ Basing
ECG239	PNP	-70	-70	-70	0.1	1.0	0.8	50	100	500	1.0	200	TO-72 Fig. 197
	NPN	70	5	70	15	1.0	1.2						

Bilateral Trigger Diodes (DIAC's)

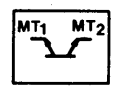

ECG Type	I_{Pulse} Amps	BV_F Volts	BV_R Volts	BI_F Max mA	BI_R Max mA	ΔV_F Volts	ΔV_R Volts	P_D	Package/ Basing
ECG6406	2	20 ± 4	20 ± 4	1	1	6	6	DO-7 150 mW; TO-92 300 mW	DO-7 Fig. 198; DO-92 Fig. 199
ECG6407	2	28 ± 4	28 ± 4	1	1	6	6		
ECG6408	2	32 ± 4	32 ± 4	1	1	6	6		

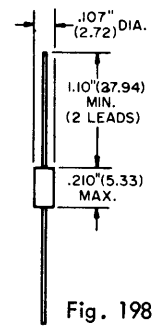

Fig. 198

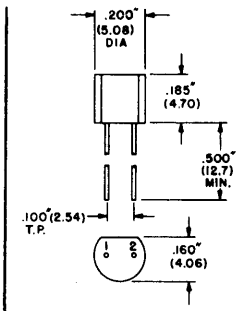

Fig. 199

Metal Oxide Varistor (MOV)

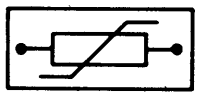

ECG Type	RMS Volts	Recurrent Peak Idle Volts	Energy Joules	Avg. Power Diss.	I_{Peak} 20μsec	Package/ Basing
ECG524	150	212	20	0.85 Watt	4000 Amps	Fig. 200

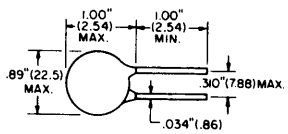

Fig. 200

Quartz Color Oscillator Crystals

ECG Type	Frequency MHz	Frequency Tolerance % at 25°C	Load Capacitance pF	Capacitance (Pin to Pin) pF Max.	Effective Resistance Ohms Max.	Operating Temperature Range °C	Temperature Drift %	Outline No.
ECG358	3.579545	± .003	Parallel Resonance 18 ± .5	7	100	+20 to +65	± .003	205
ECG358A	3.579545	± .003	Series Resonance	7	100	+20 to +65	± .003	206
ECG358B	3.579545	± .003	Parallel Resonance 34.7 ± .5	7	100	+20 to +65	± .003	205

Fig. 205
Color Oscillator

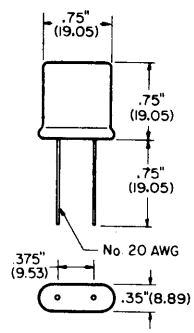

Fig. 206
Color Burst Filter

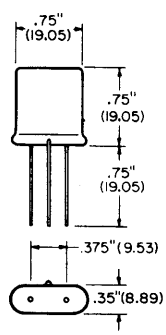

Opto-Electronic Devices

Discrete LED Indicators

ECG Type	Description/Application	Viewed Color	Forward Voltage V_F (V)	Reverse Voltage V_R (V)	Max DC Forward Current I_F (mA)	Max Pwr Diss. P_D (mW)	Fig. No.
ECG3000	Indicator Lights, Diagnostic and Panel Displays, Printed Circuit Board Indicators, Miniature Low Profile Package	Red/Clear	1.65	5.0	40	80	210
ECG3001		Red/Flooded	1.65	5.0	40	80	210
ECG3002		Yellow/Clear	2.10	5.0	35	105	210
ECG3003		Green/Clear	2.20	5.0	35	105	210
ECG3004	Diagnostic or Indicator Lights in Low-Power/Low-Current Environments, MOS Compatible	Red	1.60	5.0	5	6	211
ECG3007	General Purpose Indicators, Developmental Projects, Breadboards	Red	1.68	5.0	50	100	212
ECG3008		Bright Red	2.00	5.0	35	105	212
ECG3009		Orange	2.00	5.0	35	105	212
ECG3010		Green	2.20	5.0	35	105	212
ECG3011		Yellow	2.10	5.0	35	105	212
ECG3012	Panel Circuit Indicator Low Drive Power, High Intensity Visible Emission	Red Diffused	2.20	4.0	35	100	213
ECG3013		Red Clear Jewel	2.20	4.0	35	100	214
ECG3014		Green Diffused	2.15	4.0	45	125	213
ECG3015		Green Clear Jewel	2.15	4.0	45	125	214
ECG3016	Color Panel Circuit Indicator	Red or Green	2.10	4.0	25	75	215
ECG3018	Instruments, Printed Circuit Board Indicators, Boardmounted Panel Display	Red/Soft 90° Viewing Angle	1.65	5.0	100	180	216
ECG3019		Red/Soft 60° Viewing Angle	1.65	5.0	100	180	216
ECG3020	Computers, General Purpose Indicators, Instruments, Test Systems, Mini- and Micro-Processors, Process Controlled Industrial Systems, Sorting Machines, Assembly Equipment, Vending Machines, Telephone Equipment, Backlight Panels. High Intensity Indicators in Four Colors	Red/Flooded	1.70	5.0	100	180	217
ECG3021		Yellow	2.10	5.0	35	105	217
ECG3022		Bright Red	2.00	5.0	35	105	217
ECG3023		Orange	2.00	5.0	35	105	217
ECG3024		Green	2.20	5.0	35	105	217
ECG3025	Instruments, Printed Circuit Board Indicators, Boardmounted Panel Display	Red	1.80	5.0	100	180	218
ECG3026	Polarity Indication Tri-State Indicator, Flow Direction Display, Instruments, Tester Displays, Educational Aids	Green/Red	2.20-G 1.65-R	-- --	35-G 70-R	200	219

Discrete LED Indicator Outlines

Fig. 210

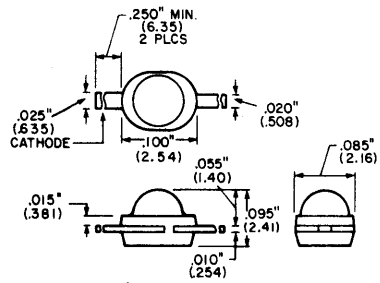

Fig. 211

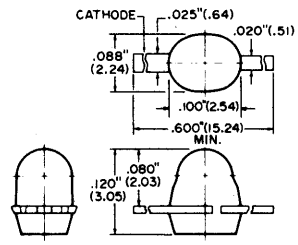

Fig. 212

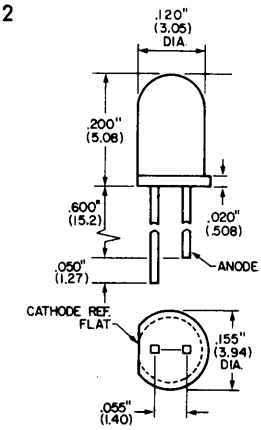

Fig. 213

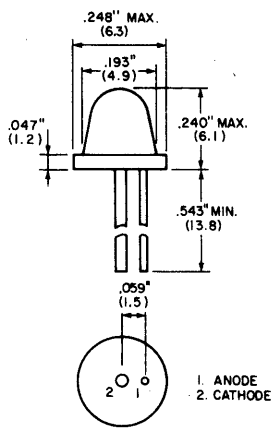

Fig. 214

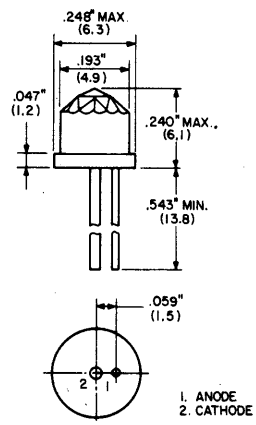

Fig. 215

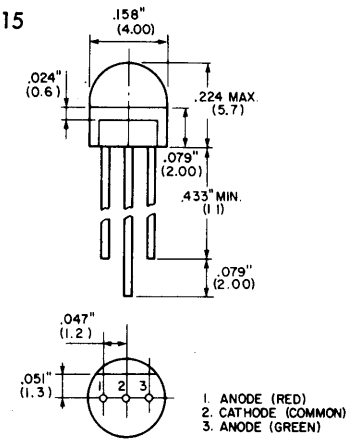

Fig. 216

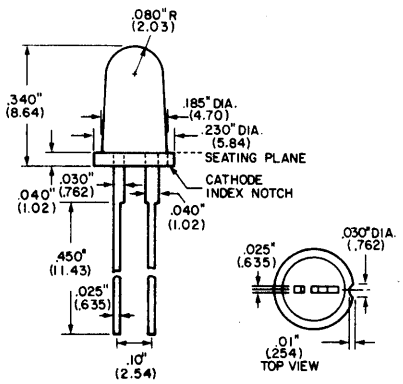

Fig. 217

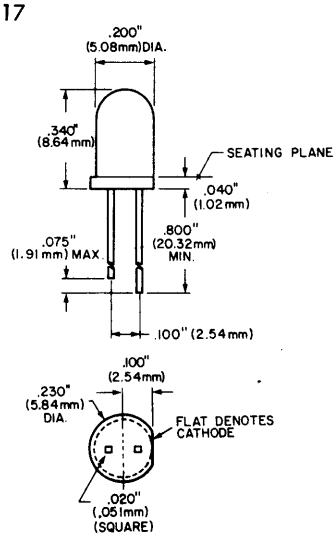

Fig. 218

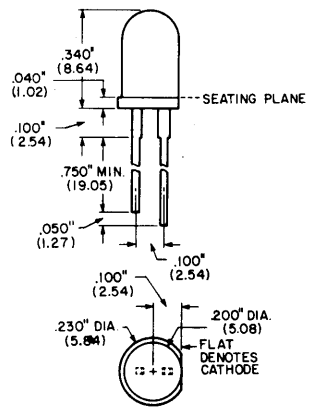

Fig. 219

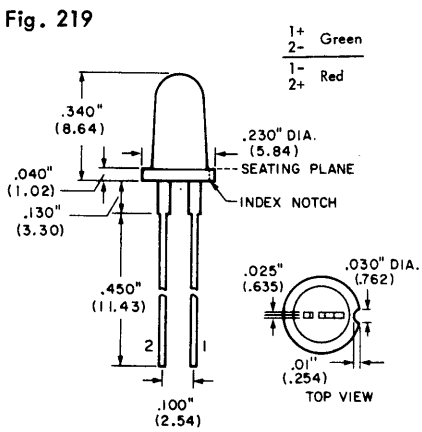

Infrared Emitting Diodes

ECG Type	Description	Min Power Output P_o	Max Forward Voltage V_F (V)	Reverse Voltage V_R (V)	DC Forward Current I_F (mA)	Power Diss. P/Case (mW)	Peak Emission Wavelength λ_p (nM)	Response Time (nS)	Beam Angle Θ HI (Deg)	Fig. No.
ECG3005	PN Gallium Arsenide	400μW	1.5	3	50	75	900	10	'60	211
ECG3006	PN Gallium Arsenide	8μW	1.8	3	50	75	940	500	10	220
ECG3027	PN Gallium Arsenide	1mW	1.5	5	100	150	900	100	15	221
ECG3028	PN Gallium Arsenide	200μW	1.5	3	150	200	900	50	15	222
ECG3029	PN Gallium Arsenide	50μW	1.5	3	100	215	900	50	50	223

Infrared Emitting Diode Outlines

Fig. 220

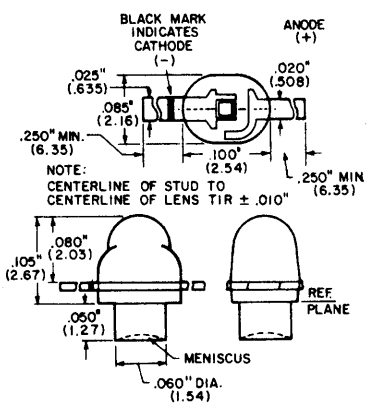

Fig. 221

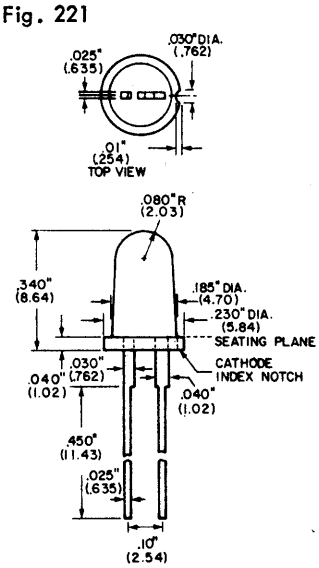

Fig. 222

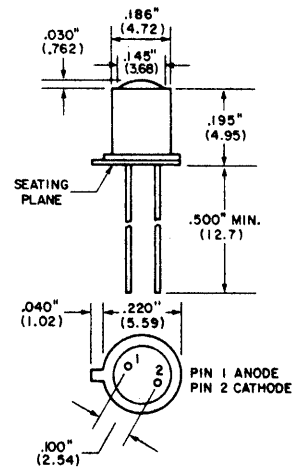

Fig. 223

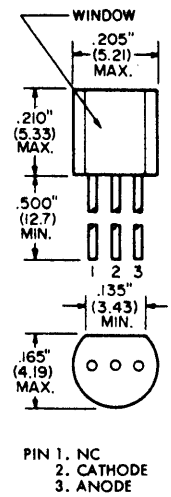

Phototransistor Detectors

ECG Type	Description	Collector to Base Voltage BV_{CBO} (V)	Max Collector Current I_c (mA)	Max Dark Current I_D at 25°C (nA)	Min Light Current I_L (mA)	Max Power Diss. at 25°C P_t (mW)	Response Time (μS)	Fig. No.
ECG3031	NPN, Si	80	40	20 at V_{CE} 5V	6	200	2	224
ECG3032	NPN, Si	80	40	20 at V_{CE} 5V	12	200	2	225
ECG3034	NPN, Si	60	100	100 at V_{CE} 10V	2	200	8	226
ECG3035	NPN, Si-Darlington Amp h_{fe} = 2.0K	40	250	100 at V_{CE} 12V	2	200	250	227
ECG3036	NPN, Si-Darlington	50	250	100 at V_{CE} 10V	12	250	40	228
ECG3037	NPN, Si	50	50	500 at V_{CE} 30V	10	150	2	229
ECG3038	NPN, Si	25	20	20 at V_{CE} 10V	5	50	1.5	230

Phototransistor Detector Outlines

Fig. 224

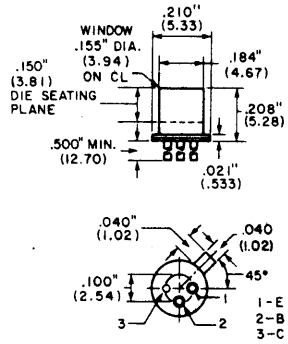

Fig. 225

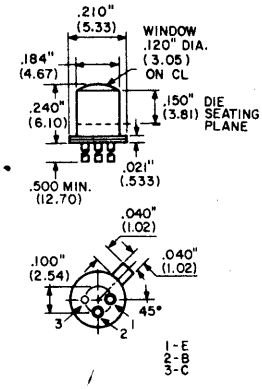

Fig. 226

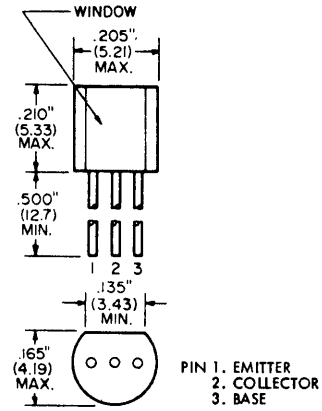

Fig. 227

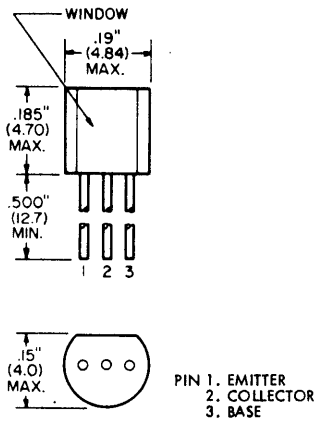

Fig. 228

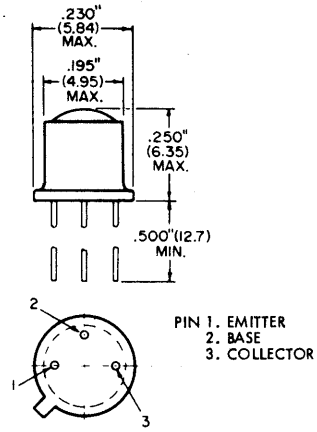

Fig. 229

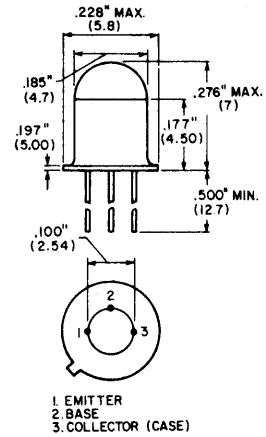

Fig. 230

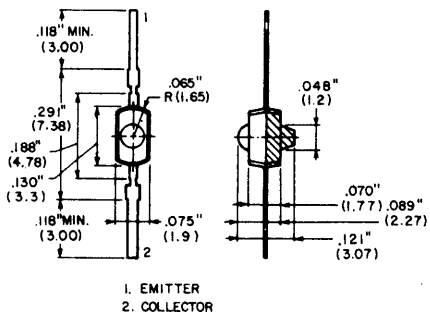

Optoisolators

ECG Type	Output Configuration	Total Device Ratings: Isolation Voltage V_{iso} Surge (V)	Total Device Ratings: Total Power P_t (mW)	Total Device Ratings: DC Current Transfer Ratio % *	LED Max. Ratings: Max Forward Current I_F (mA)	LED Max. Ratings: Max Reverse Voltage V_R (V)	Phototransistor Ratings: Collector to Base Voltage BV_{CBO} (V)	Phototransistor Ratings: Collector to Emitter Voltage BV_{CEO} (V)	Phototransistor Ratings: Collector Current I_c (mA)	Phototransistor Ratings: Typ Freq KHz	Ckt Diag.	Fig. No.
ECG3040	NPN Transistor	7500	250	20	80	3	70	30	3.5 Typ	300	A	231
ECG3041	NPN Transistor	7500	250	100	60	6	70	30	100 Max	150	A	
ECG3042	NPN Transistor	7500	250	20	60	3	70	30	50 Max	150	A	
ECG3043	NPN Transistor	3550	260	70	60	3	70	80	50 Max	100	A	
ECG3044	NPN Darlington	7500	300	300	80	3	--	80	150 Max	75	B	
ECG3045	NPN Darlington	7500	300	500	80	3	--	80	150 Max	75	B	

* DC Current Transfer Ratio is the output transistor collector current divided by the LED forward current - $h_F = I_c/I_F$

ECG Type	Output Configuration	Isolation Voltage V_{iso} Surge (V)	Total Power P_t (mW)	DC Current Transfer Ratio %	Max Forward Current I_F (mA)	Max Reverse Voltage V_R (V)	Photothyristor Ratings: V_{DRM} (V)	Photothyristor Ratings: V_{GT}	Photothyristor Ratings: I_{FT} (mA)	Photothyristor Ratings: V_F (on) (V)	Photothyristor Ratings: I_{HOLD} (mA)	Ckt Diag.	Fig. No.
ECG3046	SCR	3550	260	--	40	3	400	1V	14	1.3V at 100 mA	.5	D	231
ECG3047	TRIAC	7500	330	--	50	3	250	--	10	3.0V at 100 mA	.1	C	

Optoisolator Circuits

Diag. A

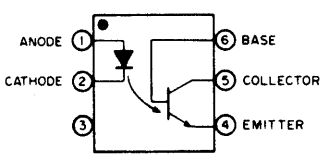

Diag. B

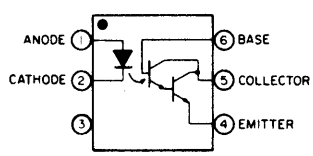

Diag. C

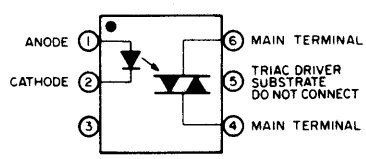

Diag. D

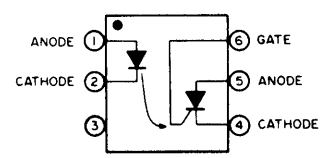

Optoisolator Outlines

Fig. 231

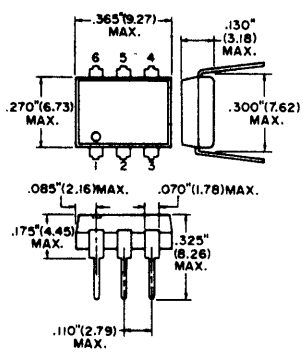

LED Displays

ECG Type	Description	Color	Digit Des.	Current Per Segment (mA)	Reverse Voltage Per Segment (V)	Power Diss. P_t (W)	Fig. No.
ECG3050	.270"; Com Anode; LHDP	Red		30	10	.750	232
ECG3051	.270"; Com Anode; Polarity/Overflow	Red		30	10	.480	233
ECG3052	.3"; Com Anode; RHDP	Red		30	5	.700	234
ECG3053		Orange		20	3	.400	
ECG3054		Green		20	3	.400	
ECG3055		Yellow		20	3	.400	
ECG3056	.3"; Com Cathode; RHDP	Red		30	5	.700	
ECG3058		Orange		20	3	.400	
ECG3059		Green		20	3	.400	
ECG3060		Yellow		20	3	.400	
ECG3061	.3"; Com Anode; LHDP	Red		30	5	.700	235
ECG3062		Orange		20	3	.400	
ECG3063		Green		20	3	.400	
ECG3064		Yellow		20	3	.400	
ECG3065	.3"; Com Anode; Polarity/Overflow	Red		30	5	.350	236
ECG3068	.4"; Com Anode; RHDP	Red		30	5	.700	237
ECG3069	.4"; Com Cathode; RHDP	Red		30	5	.700	238
ECG3070	.4"; Com Anode; RHDP	Orange		20	5	.400	237
ECG3071	.4"; Com Cathode; RHDP	Orange		20	5	.400	238
ECG3074	.560"; Com Anode; RHDP; 2-Digit	Red		20	5	.800	239
ECG3075	.560"; Com Cathode RHDP; 2-Digit	Red		20	5	.800	
ECG3076	.560"; Com Anode; RHDP; 1-1/2 Digit	Red		20	5	.650	240
ECG3077	.560"; Com Cathode; RHDP; 1-1/2 Digit	Red		20	5	.650	
ECG3078	.560"; Com Anode; RHDP	Red		20	5	.400	241
ECG3079	.560"; Com Cathode; RHDP	Red		20	5	.400	
ECG3080	.8" Com Anode; RHDP	Red		20	3	--	242

Outlines

Fig. 232

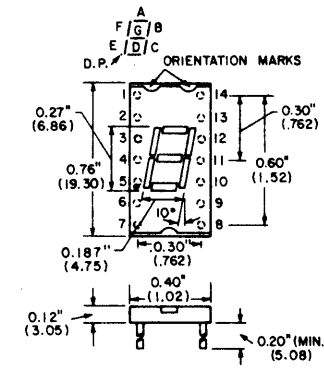

ECG3050

1. A-Cathode
2. F-Cathode
3. Common Anode
4. No Pin
5. No Pin
6. Dec P_t Cathode
7. E-Cathode
8. D-Cathode
9. Common Anode
10. C-Cathode
11. G-Cathode
12. No Pin
13. B-Cathode
14. Common Anode

Fig. 233

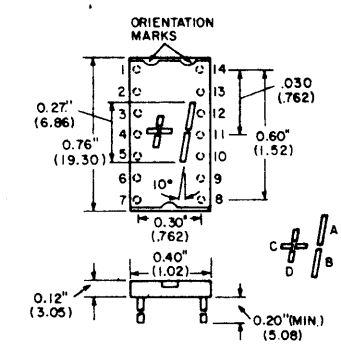

ECG3051

1. Anode Common C/D
2. No Connection
3. No Connection
4. No Connection
5. No Connection
6. No Connection
7. D-Cathode
8. C-Cathode
9. No Connection
10. B-Cathode
11. A-Cathode
12. No Connection
13. No Connection
14. Anode Common A/B

Fig. 234

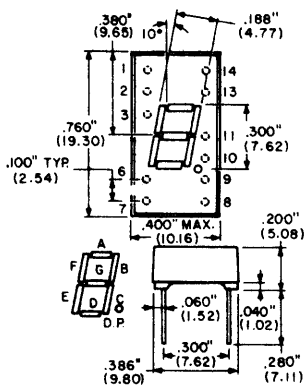

ECG3052, ECG3053, ECG3054, ECG3055

1. A-Cathode
2. F-Cathode
3. Common Anode
4. No Pin
5. No Pin
6. No Connection
7. E-Cathode
8. D-Cathode
9. Dec P_t Cathode
10. C-Cathode
11. G-Cathode
12. No Pin
13. B-Cathode
14. Common Anode

ECG3056, ECG3058, ECG3059, ECG3060

1. F-Anode
2. G-Anode
3. No Pin
4. Common Cathode
5. No Pin
6. E-Anode
7. D-Anode
8. C-Anode
9. Dec P_t Anode
10. No Pin
11. No Pin
12. Common Cathode
13. B-Anode
14. A-Anode

Fig. 235

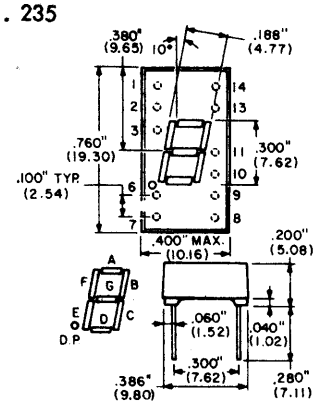

ECG3061, ECG3062, ECG3063, ECG3064

1. A-Cathode
2. F-Cathode
3. Common Anode
4. No Pin
5. No Pin
6. Dec P_t Cathode
7. E-Cathode
8. D-Cathode
9. No Connection
10. C-Cathode
11. G-Cathode
12. No Pin
13. B-Cathode
14. Common Anode

LHDP - Left Hand Decimal Point; RHDP - Right Hand Decimal Point

LED Display Outlines (cont'd)

Fig. 236

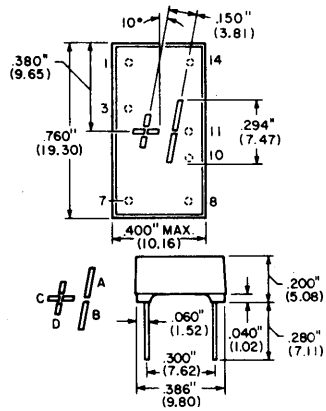

ECG3065

1. Common Anode C/D
2. No Pin
3. Common Anode C/D
4. No Pin
5. No Pin
6. No Pin
7. D-Cathode
8. C-Cathode
9. No Connection
10. B-Cathode
11. A-Cathode
12. No Pin
13. No Pin
14. Common Anode A/B

Fig. 237

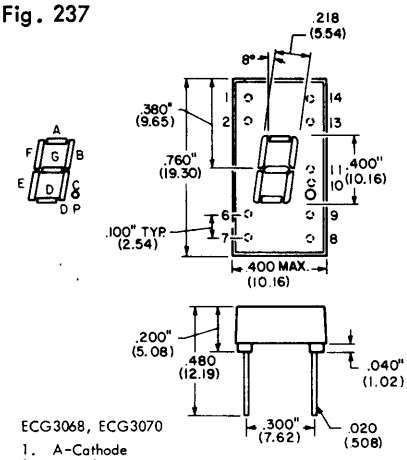

ECG3068, ECG3070

1. A-Cathode
2. F-Cathode
3. Common Anode
4. No Pin
5. No Pin
6. No Connection
7. E-Cathode
8. D-Cathode
9. Dec P_t Cathode
10. C-Cathode
11. G-Cathode
12. No Pin
13. B-Cathode
14. Common Anode

Fig. 238

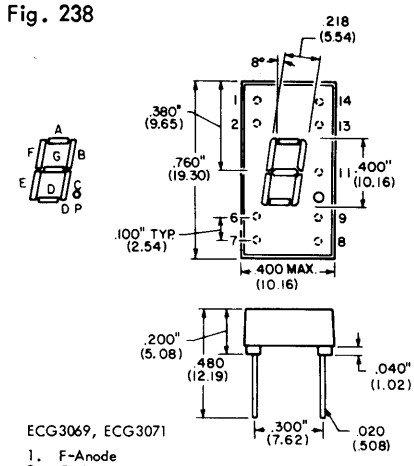

ECG3069, ECG3071

1. F-Anode
2. G-Anode
3. No Pin
4. Common Cathode
5. No Pin
6. E-Anode
7. D-Anode
8. C-Anode
9. Dec P_t Anode
10. No Pin
11. No Pin
12. Common Cathode
13. B-Anode
14. A-Anode

Fig. 239

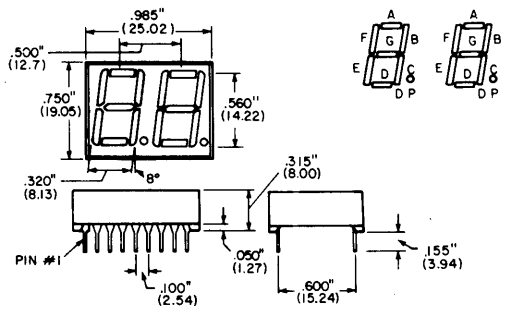

ECG3074	ECG3075
1. E-Cathode - 1	1. E-Anode - 1
2. D-Cathode - 1	2. D-Anode - 1
3. C-Cathode - 1	3. C-Anode - 1
4. Dec P_t Cathode - 1	4. Dec P_t Anode - 1
5. E-Cathode - 2	5. E-Anode - 2
6. D-Cathode - 2	6. D-Anode - 2
7. G-Cathode - 2	7. G-Anode - 2
8. C-Cathode - 2	8. C-Anode - 2
9. Dec P_t Cathode - 2	9. Dec P_t Anode - 2
10. B-Cathode - 2	10. B-Anode - 2
11. A-Cathode - 2	11. A-Anode - 2
12. F-Cathode - 2	12. F-Anode - 2
13. Common Anode - 2	13. Common Cathode - 2
14. Common Anode - 1	14. Common Cathode - 1
15. B-Cathode - 1	15. B-Anode - 1
16. A-Cathode - 1	16. A-Anode - 1
17. G-Cathode - 1	17. G-Anode - 1
18. F-Cathode - 1	18. F-Anode - 1

Fig. 240

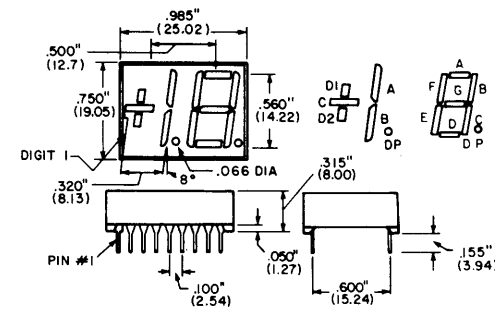

ECG3076	ECG3077
1. C-Cathode - 1	1. C-Anode - 1
2. D-Cathode - 1	2. D-Anode - 1
3. B-Cathode - 1	3. B-Anode - 1
4. Dec P_t Cathode - 1	4. Dec P_t Anode - 1
5. E-Cathode - 2	5. E-Anode - 2
6. D-Cathode - 2	6. D-Anode - 2
7. G-Cathode - 2	7. G-Anode - 2
8. C-Cathode - 2	8. C-Anode - 2
9. Dec P_t Cathode - 2	9. Dec P_t Anode - 2
10. B-Cathode - 2	10. B-Anode - 2
11. A-Cathode - 2	11. A-Anode - 2
12. F-Cathode - 2	12. F-Anode - 2
13. Common Anode - 2	13. Common Cathode - 2
14. Common Anode - 1	14. Common Cathode - 1
15. A-Cathode - 1	15. A-Anode - 1
16. No Connection	16. No Connection
17. No Connection	17. No Connection
18. No Connection	18. No Connection

Fig. 241

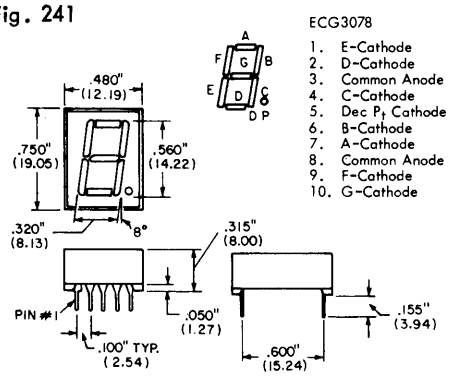

ECG3078	ECG3079
1. E-Cathode	1. E-Anode
2. D-Cathode	2. D-Anode
3. Common Anode	3. Common Cathode
4. C-Cathode	4. C-Anode
5. Dec P_t Cathode	5. Dec P_t Anode
6. B-Cathode	6. B-Anode
7. A-Cathode	7. A-Anode
8. Common Anode	8. Common Cathode
9. F-Cathode	9. F-Anode
10. G-Cathode	10. G-Anode

Fig. 242

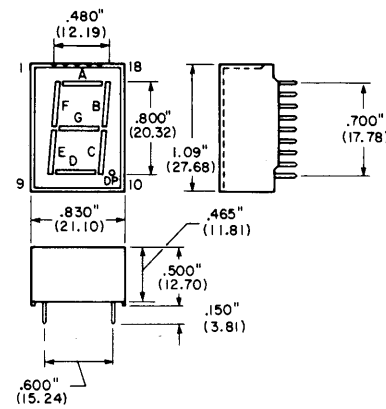

ECG3080

1. No Pin
2. Segment A
3. Segment F
4. Common Anode
5. Segment E
6. Common Anode
7. No Connection
8. No Pin
9. No Pin
10. Decimal Point
11. Segment D
12. Common Anode
13. Segment C
14. Segment G
15. Segment B
16. No Pin
17. Common Anode
18. No Pin

Linear Integrated Circuits and Modules

Selector Guide

AUDIO POWER AMPLIFIERS

WATTS	ECG NO.
0.5	745
	1031
0.7	1036
1.0	717
	807
	825
	1008
	1009
	1032
	1033
	1035
	1043
	1075A
	1093
	1095
	1097
	1126
1.3	1137
	1228
1.5	1088
	1141
	1180
	1224
2.0	740A
	742
	804
	810
	826
	1010
	1034
	1110
	1117
	1140
	1154
	1156
	1238
2.1	1113
2.2	1112
2.5	1011
	1150
3.0	1007
	1175
3.3	1118
3.5	1029
	1038
	1185
4.0	814
	1023
	1098
	1111
4.2	1153
	1222
4.4	1058
4.5	1081A
	1114
	1127
	1165
	1193
4.8	1107
5.0	1116
5.2	1160
5.5	1037
	1166
	1169
	1211
	1239
	1240
	1260
	1261
5.8	1155
	1194
	1256
6.5	1078
	1259
7.0	1115
7.5	1180
8.0	1024
	1232
13.0	1025
	1027
	1139
25.0	1028
	1090
50.0	1148

2-CHANNEL AUDIO POWER AMPLIFIERS

WATTS	ECG NO.
2.0	990
6.0	1220
7.0	1218
9.5	1212
15.0	1219
	1252

AUDIO PREAMPLIFIERS

Monaural

ECG753	ECG1020	ECG1087	ECG1179
ECG1000	ECG1021	ECG1102	ECG1184
ECG1001	ECG1052	ECG1103	ECG1195
ECG1015	ECG1053	ECG1119	ECG1205
ECG1016	ECG1082	ECG1170	ECG1210
ECG1019	ECG1085	ECG1171	ECG1223

Stereo

ECG721	ECG1083
ECG727	ECG1215
ECG824	ECG1221
ECG983	

AUDIO DRIVERS

ECG735	ECG1102
ECG755A	ECG1119
ECG1059	ECG1120

FM RADIO

Detectors, Limiters

ECG737	ECG1057
ECG1045	ECG1108
ECG1047	

IF Amplifiers

ECG734	ECG826	ECG1047	ECG1100
ECG736	ECG1002	ECG1054	ECG1108
ECG746	ECG1003	ECG1055	ECG1124
ECG750	ECG1039	ECG1057	ECG1227
ECG781	ECG1040	ECG1060	ECG1242
ECG786	ECG1041	ECG1072	ECG1301
ECG788	ECG1042	ECG1073	ECG1309
ECG805	ECG1045	ECG1074	ECG1310
ECG806			

Stereo Demodulators - Decoders

ECG719	ECG801	ECG1106	ECG1226
ECG720	ECG973D	ECG1181	ECG1230
ECG722	ECG1005	ECG1206	ECG1243
ECG743	ECG1006	ECG1217	ECG1248
ECG789	ECG1056	ECG1225	

4-Channel "SQ" Decoders

ECG799
ECG803
ECG1022

AM RADIO

ECG744	ECG1055	ECG1074	ECG1214
ECG784	ECG1060	ECG1108	ECG1237
ECG1049	ECG1072	ECG1124	ECG1242
ECG1054	ECG1073		

HEAD COIL AND METER DRIVER

ECG1241

OPERATIONAL AMPLIFIERS

ECG724	ECG909	ECG941	ECG975
ECG725	ECG909D	ECG941D	ECG976
ECG726	ECG913	ECG941M	ECG987
ECG778	ECG915	ECG947	ECG992
ECG903	ECG925	ECG949	ECG1302
ECG908			

FET INPUT OPERATIONAL AMPLIFIER

ECG940

COMPARATORS

ECG910
ECG910D
ECG911
ECG911D

DIODE ARRAYS

ECG905
ECG907

TRANSISTOR ARRAYS

ECG904
ECG912
ECG916

DIFFERENTIAL AMPLIFIERS

ECG900
ECG906
ECG917

WIDE BAND AMPLIFIERS

ECG787
ECG901

MODULATORS

ECG1052	ECG1092	ECG1104	ECG1166
ECG1082	ECG1100	ECG1119	ECG1169
ECG1083	ECG1101	ECG1120	ECG1194
ECG1087	ECG1103	ECG1165	

RF - IF AMPLIFIERS

ECG371	ECG1013
ECG703	ECG1014
ECG816	ECG1092
ECG817	ECG1104
ECG1012	

TELEVISION

AFC, AFT

ECG711	ECG1046
ECG780	ECG1061
ECG783	ECG1096
ECG984	ECG1174
ECG1004	ECG1250

Audio System

ECG742

Chroma Amplifiers, Demodulators

ECG705A	ECG791	ECG1062	ECG1159
ECG707	ECG798	ECG1063	ECG1163
ECG713	ECG819	ECG1068	ECG1178
ECG729	ECG821	ECG1071	ECG1183
ECG739	ECG986	ECG1099	ECG1196
ECG782	ECG1048	ECG1122	ECG1216
ECG790	ECG1050	ECG1130	ECG1305

Chroma Control

ECG809

Chroma IF Amplifiers

ECG715
ECG738
ECG982
ECG1094

Color Subcarrier, Sync, Amplifiers

ECG714
ECG1105
ECG1121
ECG1132

Chroma Signal Processors

ECG728	ECG1069	ECG1158	ECG1200
ECG797	ECG1089	ECG1182	ECG1266
ECG822	ECG1105	ECG1189	ECG1269
ECG986	ECG1123	ECG1191	ECG1304
ECG1067	ECG1131	ECG1196	ECG1307

Horizontal Circuits

ECG792
ECG815
ECG820
ECG1018
ECG1190

Signal Processor

ECG779-1

Sound IF, Limiter, Detectors

ECG704	ECG781	ECG1133	ECG1175
ECG708	ECG1002	ECG1161	ECG1231
ECG709	ECG1003	ECG1162	ECG1308
ECG746			

Sound IF, Limiter, Detector, Audio Drivers

ECG706	ECG807
ECG710	ECG1045
ECG712	ECG1047
ECG748	ECG1051
ECG786	ECG1246

FM IF, TV Sound IF

ECG1234

Vertical Circuits

ECG793	ECG1129	ECG1258
ECG794	ECG1190	ECG1312
ECG1077	ECG1229	ECG1313
ECG1079	ECG1245	

Video Amplifiers, Detector, Processors

ECG731	ECG1064	ECG1084	ECG1164
ECG747	ECG1065	ECG1109	ECG1168
ECG749	ECG1066	ECG1134	ECG1177
ECG808	ECG1070	ECG1161	ECG1187
ECG901	ECG1080		

Selector Guide (cont'd)

Video IF Amplifiers

ECG730 ECG1173
ECG984 ECG1186
ECG1076 ECG1213
ECG1091 ECG1306
ECG1128

Sync Separator

ECG1086

Remote Control

ECG785
ECG1300

TV Luminance Processors

ECG818
ECG985
ECG1264

ACC, APC Detector

ECG982

POSITIVE VOLTAGE REGULATORS

Fixed Voltage - Three Terminal

5V	ECG309K ECG960 ECG977	12V	ECG966
		13.1V	ECG1251
6V	ECG962	15V	ECG968
6.2V	ECG988	24V	ECG971 ECG972
8V	ECG964 ECG981		

Variable Voltage

2V to 32V	ECG946	9V to 35V	ECG756 ECG757 ECG762 ECG763
2V to 37V	ECG923 ECG923D		
9V to 20V	ECG758 ECG759 ECG764 ECG765		

NEGATIVE VOLTAGE REGULATORS

Fixed Voltage - Three Terminal

5V	ECG961
6V	ECG963
12V	ECG967
15V	ECG969

Variable Voltage

2V to 37V	ECG923 ECG923D

FREQUENCY DIVIDERS

ECG1198
ECG1199
ECG1207
ECG2040
ECG9200

ZERO VOLTAGE SWITCHES

ECG914
ECG979

ELECTRONIC ATTENUATORS

ECG766
ECG802

TIMERS - OSCILLATORS

ECG955M
ECG978

WIRELESS MICROPHONES

ECG1014
ECG1017

MODULATOR/DEMODULATOR

ECG973

PHASE FREQUENCY DETECTORS

ECG974
ECG1172
ECG1208

PHASE LOCKED LOOPS (PLL)

ECG980 ECG1253
ECG989 ECG1254
ECG1167 ECG1255
ECG1233

VOLTAGE CONTROLLED OSCILLATORS

ECG1192 ECG1203
ECG1201 ECG1247
ECG1202 ECG1262

FREQUENCY SYNTHESIZER

ECG991

VCRs

ECG1263 ECG1267 ECG9200 *
ECG1264 ECG1268 ECG9400 *
ECG1265 ECG1269 ECG9401 *
ECG1266 ECG1270

DOLBY CIRCUITS

ECG2000
ECG2001
ECG2002
ECG2003
ECG2004

* Located in Miscellaneous IC Section page 159.

Linear IC and Module Circuits

ECG309K — Fig. 245

Regulator, 5 V, 1 Amp

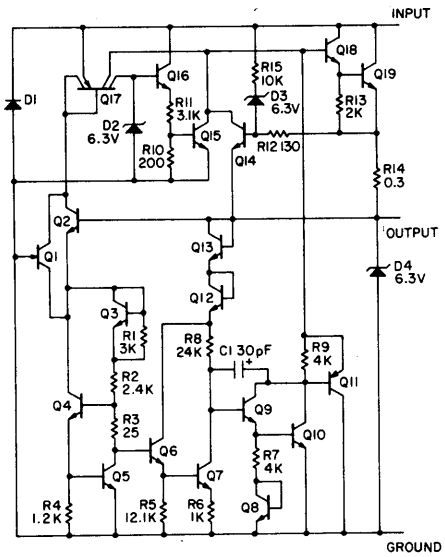

ECG370 — Fig. 254

Communication circuit-squelch, AGC, constant-amplitude audio oscillator, S.S.B. automatic load control. Replacement for LM370.

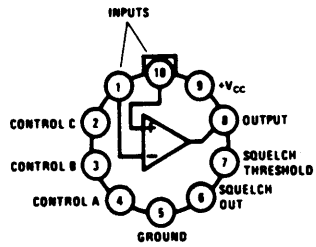

ECG371 — Fig. 254

RF/IF amplifier-emitter-coupled or cascade operation from DC to 250 MHz. 100-MHz tuned power gain - 24.6dB (emitter coupled). Replacement for LM371.

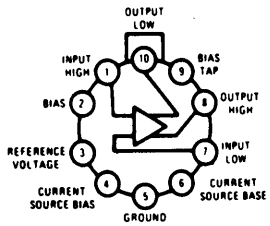

ECG703A — Fig. 248

RF/IF amplifier. Replacement for μA703, μA703A, ECG703, etc.

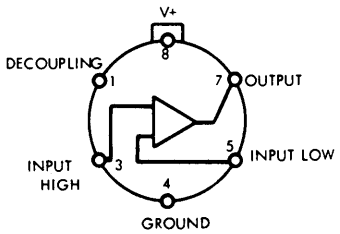

NOTE: PIN 4 CONNECTED TO CASE

ECG704 — Fig. 251

TV sound and IF amplifier and detector.

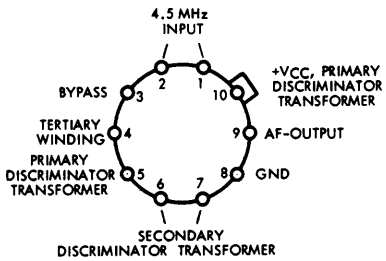

ECG705A — Fig. 250

Chroma demodulator.

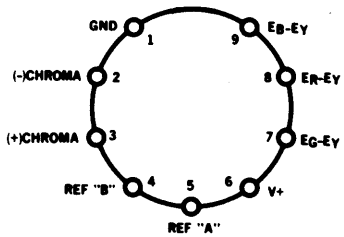

ECG706 — Fig. 317

TV/FM IF amp/limiter/detector/audio driver for tube-type audio power amplifiers.

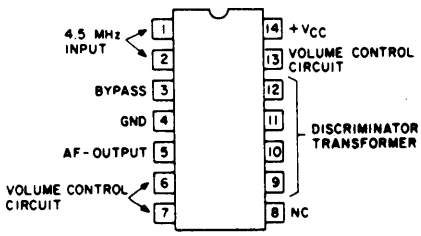

ECG707 — Fig. 254

Chroma demodulator.

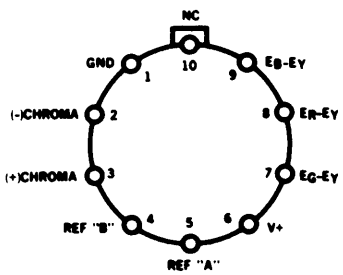

ECG708 — Fig. 314

FM & TV sound IF amp/detector/limiter.

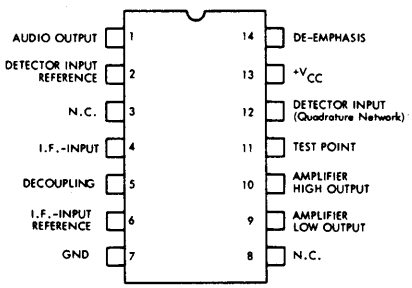

ECG709 — Fig. 314

FM & TV sound IF amp/detector/limiter for portable & vehicular equipment.

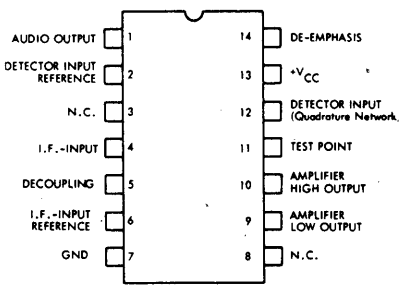

Linear IC and Module Circuits (cont'd)

ECG710 Fig. 317 (Alternate Fig. 314)

TV/FM IF amp/limiter/detector/audio driver for transistor-type power amplifiers.

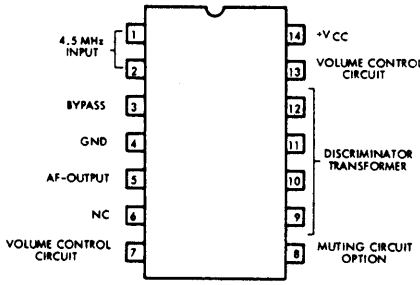

ECG711 Fig. 251

Color TV-AFT system.

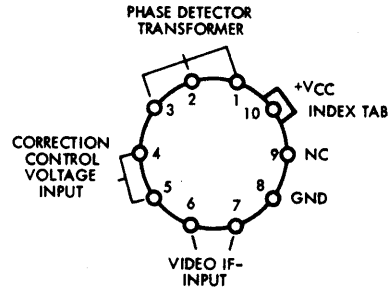

ECG712 Fig. 314 (Alternate Fig. 317)

FM & TV sound IF/detector & electronic attenuator.

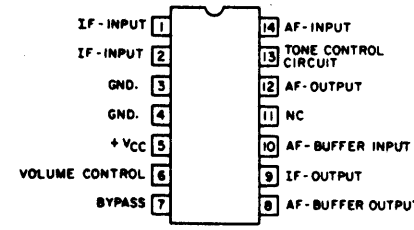

ECG713 Fig. 314

Chroma demodulator.

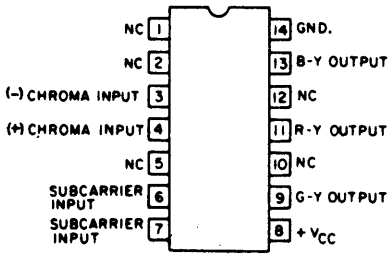

ECG714 Fig. 336

Color subcarrier regenerator.

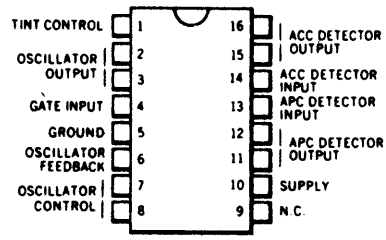

ECG715 Fig. 314

Chroma IF amplifier.

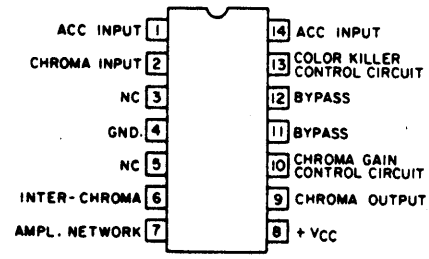

ECG716 Fig. 249

Audio amplifier. Replacement for μA716 series.

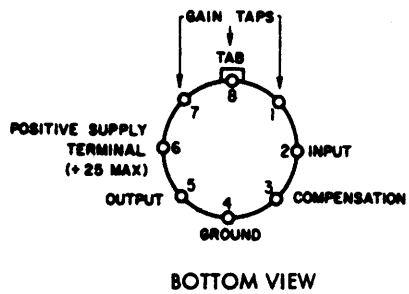

ECG717 Fig. 318

Audio power amplifier. Replacement for PA234.

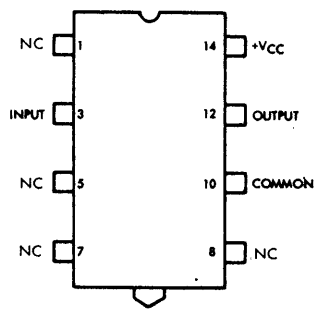

ECG718 Fig. 314

FM-stereo multiplex demodulator.

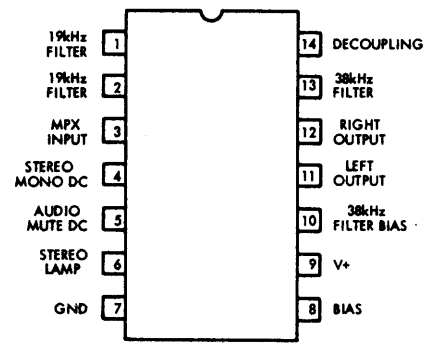

ECG719 Fig. 314

FM-stereo multiplex demodulator. Emitter follower outputs.

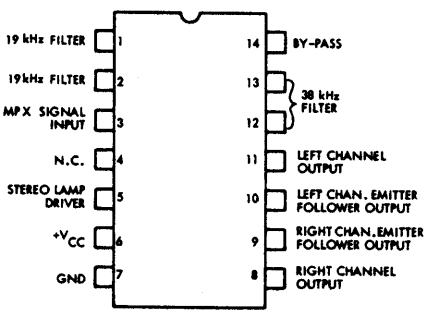

ECG720 Fig. 314

FM-stereo multiplex demodulator with adjustable stereo channel separation.

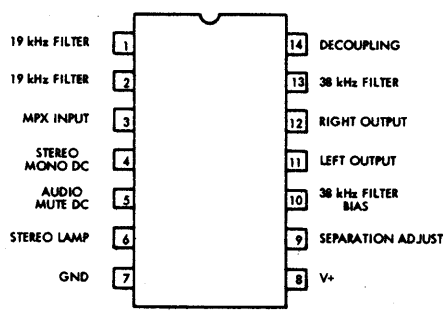

ECG721 Fig. 314

Dual low-noise, low-level preamplifier.

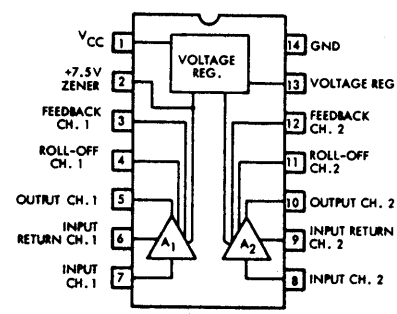

Linear IC and Module Circuits (cont'd)

ECG722 Fig. 314

FM-stereo multiplex demodulator.

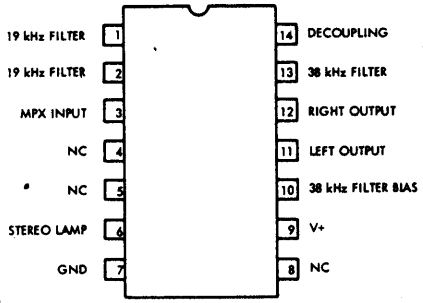

ECG723 Fig. 314

FM sound system for communications & high-fidelity FM receivers.

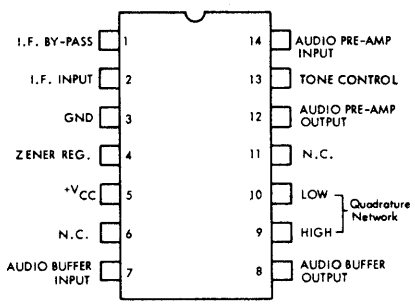

ECG724 Fig. 249

Differential/cascade amplifier for communications & industrial equipment. From DC to 120 MHz.

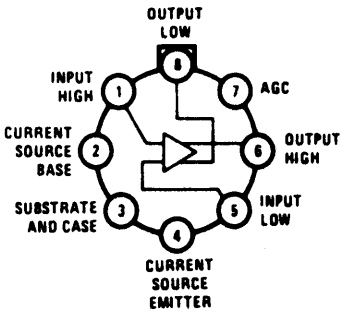

ECG725 Fig. 314

Dual low-noise operational amplifier.

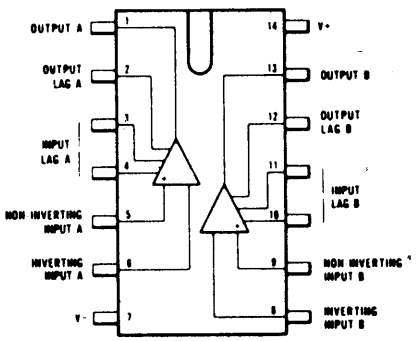

ECG726 Fig. 254

Wide-band amplifier replacement for CA3011 and CA3012.

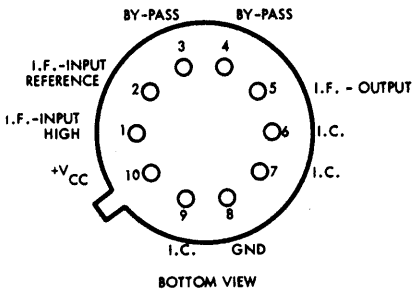

ECG727 Fig. 336

Four independent AC amplifiers for low-noise AC applications in consumer and industrial service.

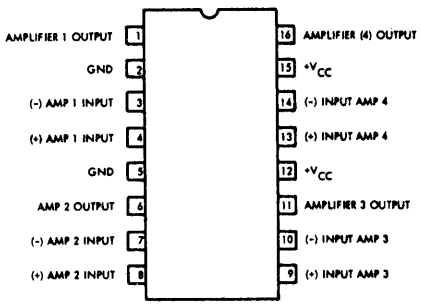

ECG728 Fig. 337

Chroma signal processor.

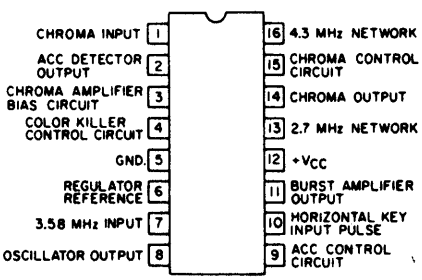

ECG729 Fig. 336

Chroma demodulator.

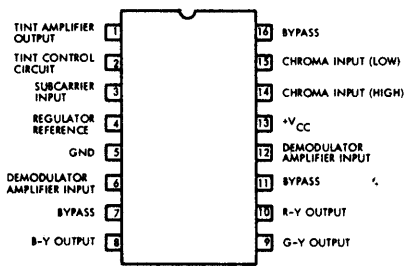

ECG730 Fig. 346

TV video IF system.

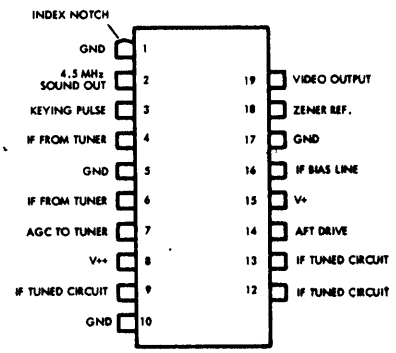

ECG731 Fig. 336

Video signal processor. Replacement for Zenith 221-45.

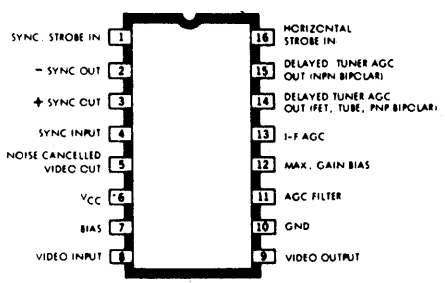

ECG735 Fig. 275

Class "A" audio driver.

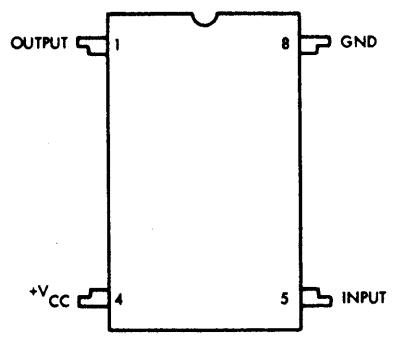

ECG736 Fig. 276

FM gain block with voltage regulator.

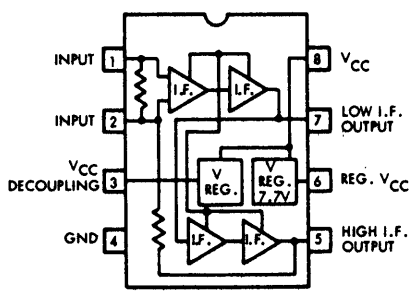

Linear IC and Module Circuits (cont'd)

ECG737 Fig. 314

FM limiter/detector with voltage regulator.

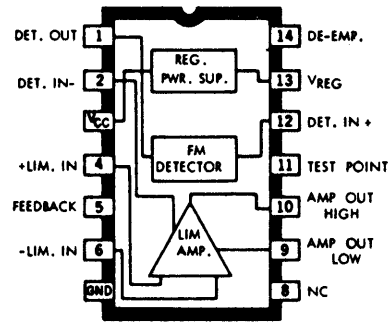

ECG738 Fig. 314

Chroma IF amp, automatic chroma control, color killer, injection lock reference system, and DC hue control.

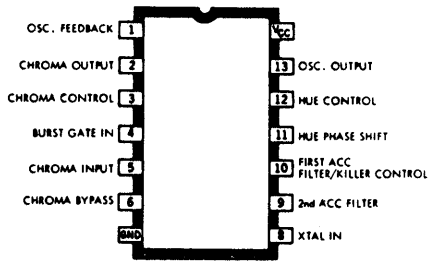

ECG739 Fig. 314

Chroma demodulator with RGB matrix and chroma driver stages.

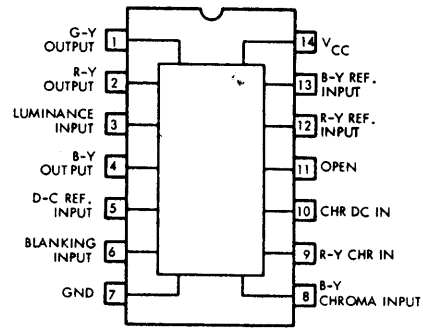

ECG740A Fig. 319 (Alternate Fig. 316)

AF PO, 2 W

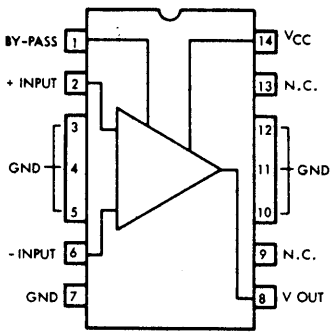

ECG742 Fig. 338

TV sound system, 2 W PO

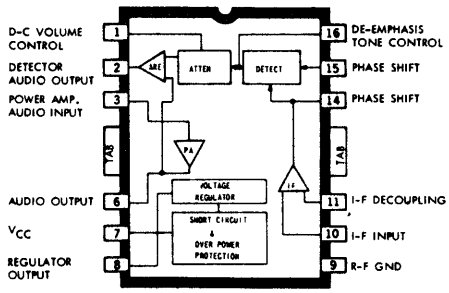

ECG743 Fig. 336

FM stereo decoder - phase-locked loop.

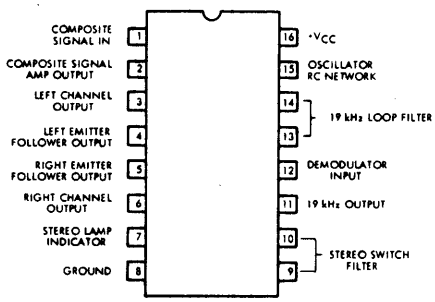

ECG744 Fig. 314

RF IF amplifier for AM radio.

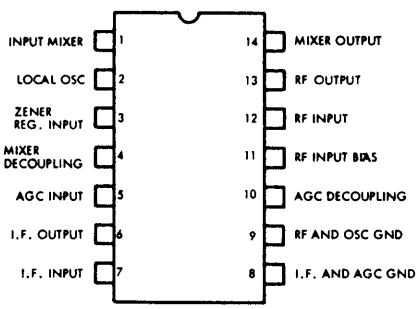

ECG745 Fig. 277

1/2-watt audio amplifier.

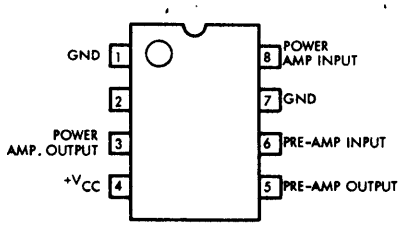

ECG746 Fig. 277

FM TV sound IF amplifier.

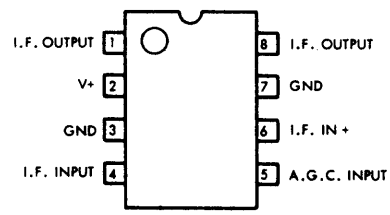

ECG747 Fig. 277

Low-level video detector.

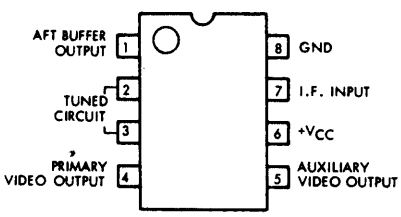

ECG748 Fig. 314

TV sound IF amp/limiter/detector, audio preamp.

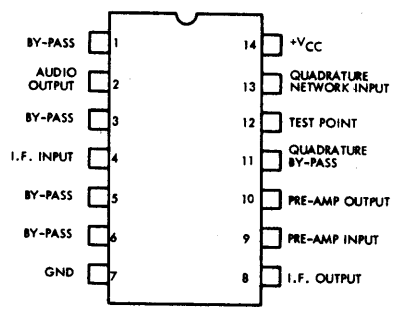

ECG749 Fig. 314

TV video IF amplifier with AGC and keyer circuit.

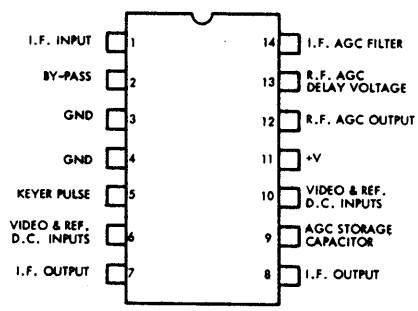

Linear IC and Module Circuits (cont'd)

ECG750 Fig. 314

Four-stage, high-gain FM/IF amplifier/limiter.

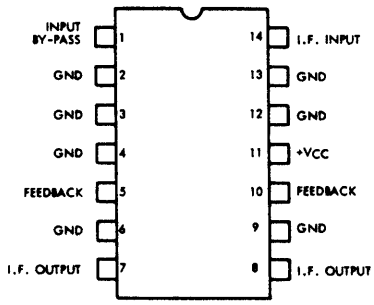

ECG752 Fig. 262

1/4-watt audio output - for battery-operated portable equipment. Replacement for MFC4000B.

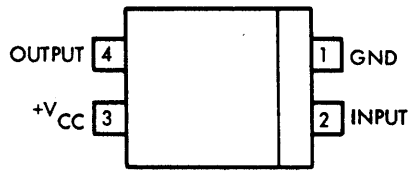

ECG753 Fig. 262

Wide-band amplifier. Replacement for MFC4010A.

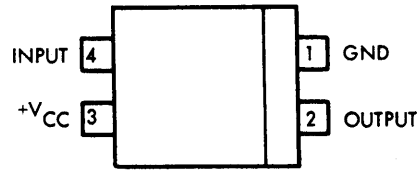

ECG754 Fig. 262

Single toggle flip-flop. Replacement for MFC4040.

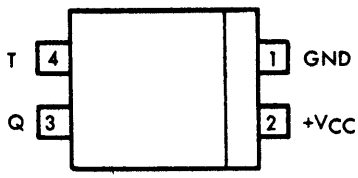

ECG755 Fig. 262

Class "A" audio driver. Replacement for MFC4050.

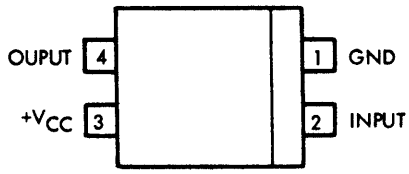

ECG756* Fig. 262

Voltage regulator 9-35 volts, 200mA - I LOAD
Load Regulation 1mA - 50mA - 0.2%
Line Regulation 0.03%
Replacement for MFC4060, MFC4060A.

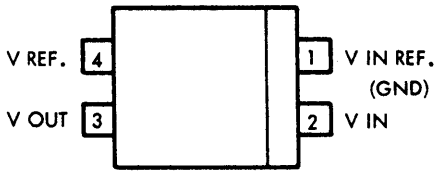

ECG757* Fig. 262

Voltage regulator 9-35 volts, 200mA - I LOAD (max)
Load Regulation 1mA - 50mA - 0.4%
Line Regulation 0.06%
Replacement for MFC4062, MFC4062A.

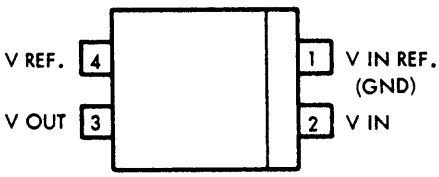

ECG758* Fig. 262

Voltage regulator 9-20 volts, 200mA - I LOAD (max)
Load Regulation 1mA - 50mA - 0.2%
Line Regulation 0.03%
Replacement for MFC4063, MFC4063A.

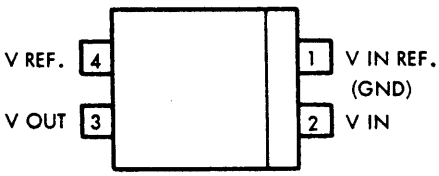

ECG759* Fig. 262

Voltage regulator 9-20 volts, 200mA - I LOAD (max)
Load Regulation 1mA - 50mA - 0.4%
Line Regulation 0.06%
Replacement for MFC4064, MFC4064A.

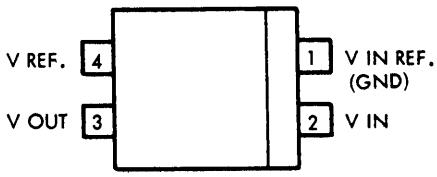

ECG760 Fig. 267

FM IF amplifier. Replacement for MFC6010.

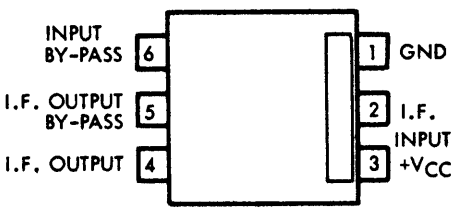

ECG761 Fig. 267

Dual toggle flip-flop. Replacement for MFC6020.

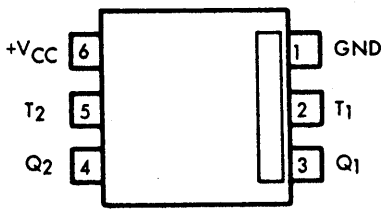

ECG762 Fig. 267

Voltage regulator 9-35 volts, 200mA - I LOAD (max). Permits external compensation and current limiting.
Load Regulation 1mA - 50mA - 0.2%
Line Regulation 0.03%
Replacement for MFC6030, MFC6030A.

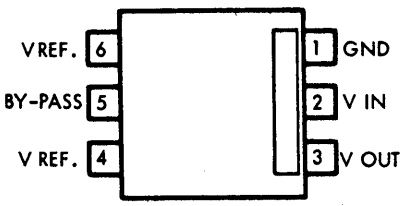

* 3-Volt Differential Between V_{IN} and V_{OUT}

Linear IC and Module Circuits (cont'd)

ECG763 Fig. 267

Voltage regulator 9-35 volts, 200mA - I LOAD (max). Permits external compensation and current limiting.
Load Regulation 1mA - 50mA - 0.4%
Line Regulation 0.06%
Replacement for MFC6032, MFC6032A.

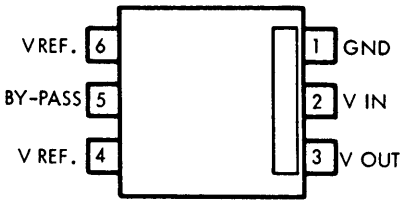

ECG764 Fig. 267

Voltage regulator 9-20 volts, 200mA - I LOAD (max). Permits external compensation and current limiting.
Load Regulation 1mA - 50mA - 0.2%
Line Regulation 0.03%
Replacement for MFC6033, MFC6033A.

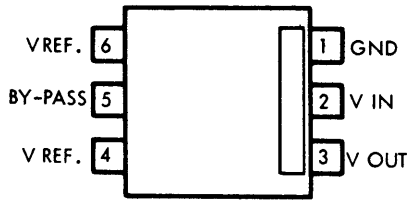

ECG765 Fig. 267

Voltage regulator 9-20 volts, 200mA - I LOAD (max). Permits external compensation and current limiting.
Load Regulation 1mA - 50mA - 0.4%
Line Regulation 0.06%
Replacement for MFC6034, MFC6034A.

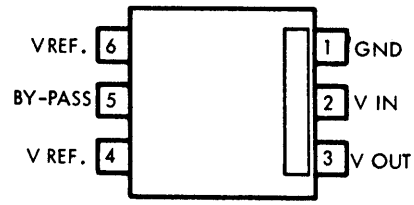

ECG766A Fig. 280

Electronic attenuator - DC-operated volume control, compression and expansion amplifier. Controlled by DC voltage or external variable resistor. Replacement for MFC6040.

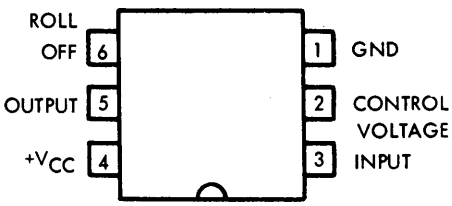

ECG767 Fig. 267

Dual toggle flip-flop with reset. Compatible with TTL and DTL. Reset (R) available to set output to "O" regardless of previous history. Replacement for MFC6050.

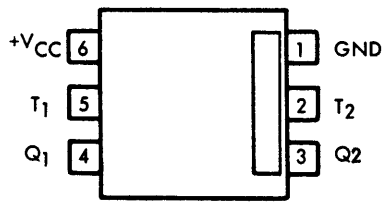

ECG768 Fig. 267

3-input and gate. Compatible with TTL and DTL. Replacement for MFC6060.

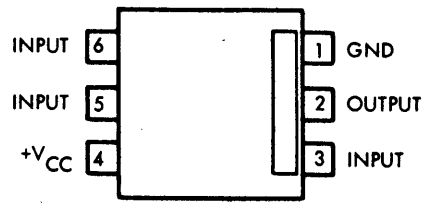

ECG769 Fig. 267

1-watt audio power amplifier. 100-mW sensitivity for 1-watt output. No heat sink required for 1-watt output at TA = 55°C. Replacement for MFC6070.

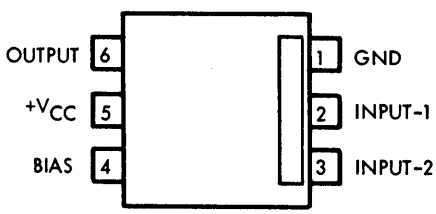

ECG770 Fig. 267

RS flip-flop. Compatible with TTL and DTL. High-current buffered outputs allow direct drive of medium current lamps and relays. Replacement for MFC6080.

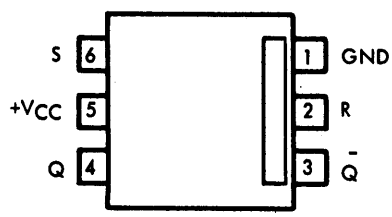

ECG772A Fig. 279

Audio pre-amp and class "B" driver. For complementary output transistors. Drives up to 15-watt output into 4-ohm load stages. Replacement for MFC8020.

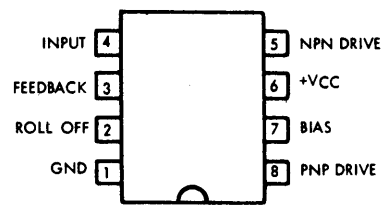

ECG773 Fig. 278

Differential/cascade amplifier. Diode available for biasing. Replacement for MFC8030.

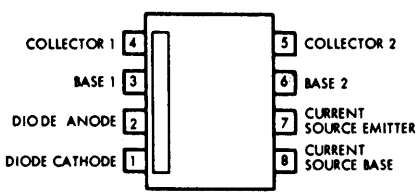

ECG775 Fig. 278

J-K flip-flop for use in high level, low-speed logic and timing systems. Compatible with TTL and DTL. J and K inputs allow control of desired state. Direct clear (CD) allows reset to zero at any time. Replacement for MFC8050.

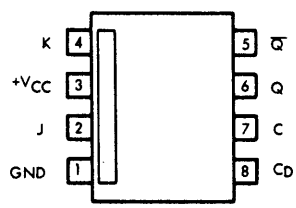

Linear IC and Module Circuits (cont'd)

ECG776 Fig. 278

Zero voltage switch - for use in AC power switching applications with output drive capable of triggering TRIAC. Replacement for MFC8070.

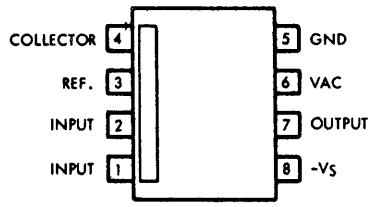

ECG778A Fig. 277

Dual, internally compensated, high-performance operational amplifier. 8-pin "mini-D.I.P." package.

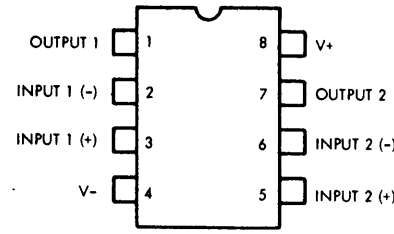

ECG779-1 Fig. 314

TV signal processor, sync separator, noise inverter, AGC comparator, RF AGC delay amplifier. For color or monochrome TV receivers.

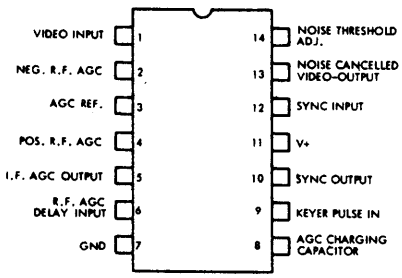

ECG780 Fig. 251

Wide-band amplifier, differential detector, DC amplifier, and zener diode regulator for automatic frequency control applications. High-gain IF amplifier allows use with TV receivers with low-level IF amps.

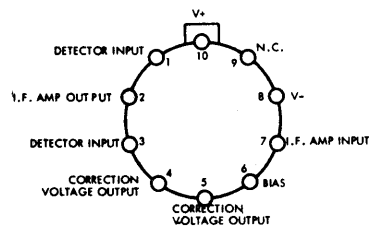

ECG781 Fig. 249

High-gain, wide band IF amplifier/limiter for use in high-quality FM and communications receivers.

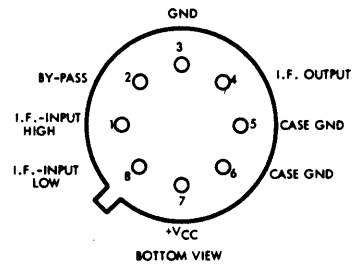

ECG782 Fig. 314

Chroma demodulator. Replacement for Philco 46-5002-5 and 46-5002-21.

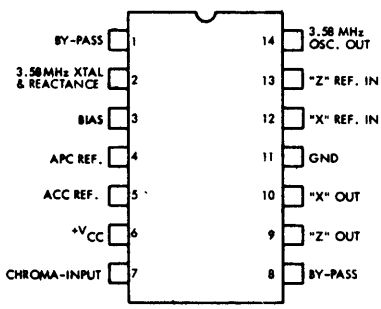

ECG783 Fig. 314

TV automatic frequency control.

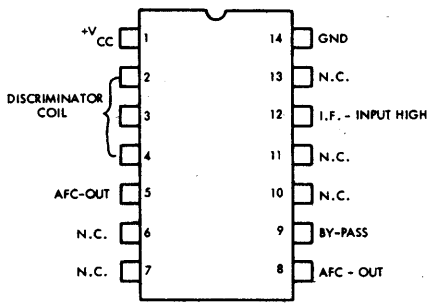

ECG784 Fig. 258

Multi-purpose, wide-band power amplifiers for industrial and commercial equipment.

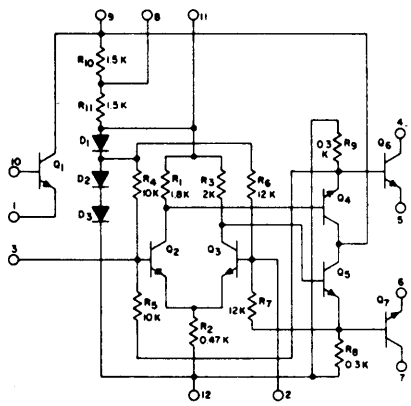

ECG785 Fig. 254

Ultra high-gain, wide-band amplifier array. Three individual general-purpose amplifiers.

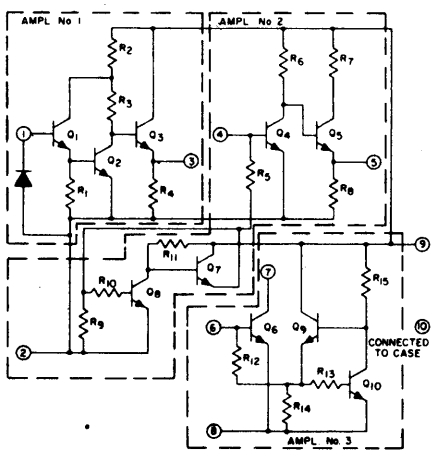

Linear IC and Module Circuits (cont'd)

ECG786 Fig. 259

FM IF amp/limiter/detector, AF pre-amp and driver. For communications receivers and high-fidelity FM receivers.

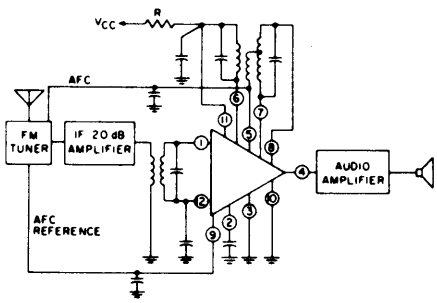

ECG787 Fig. 336

AM receiver subsystem and general-purpose amplifier array.

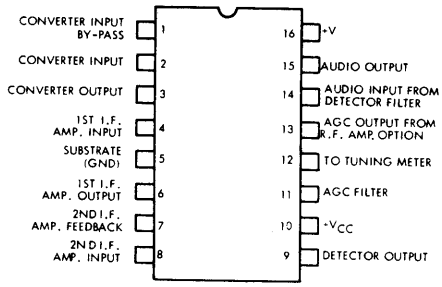

ECG788 Fig. 336

FM IF system. IF amplifier, quadrature detector, AF preamplifier, circuits for AGC, AFC, muting, and tuning meter.

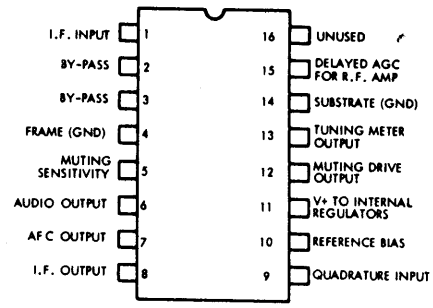

ECG789 Fig. 337

FM-stereo decoder.

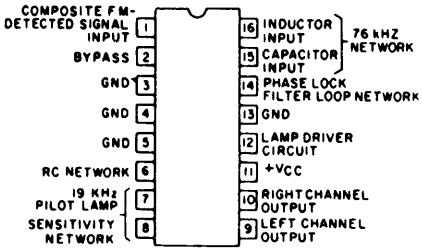

ECG790 Fig. 314

Dual chroma demod.

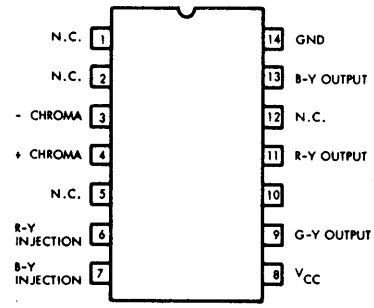

ECG791 Fig. 336

Chroma amp, demod.

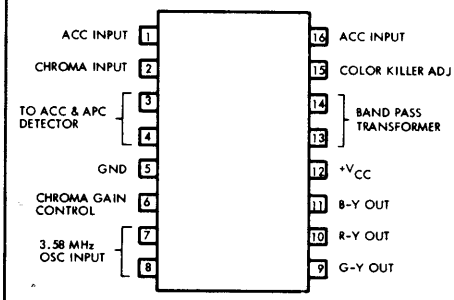

ECG792 Fig. 335

Horiz processor.

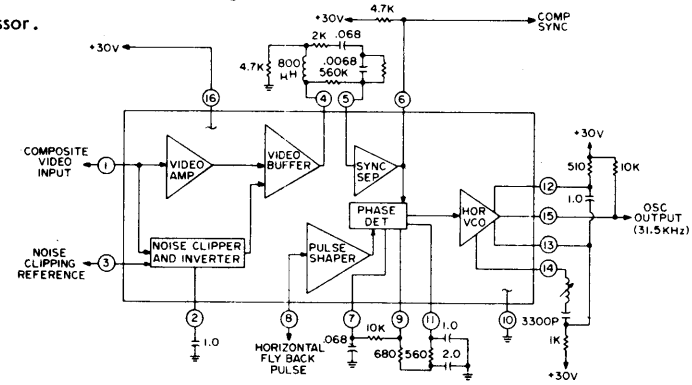

ECG793 Fig. 314

Vert countdown.

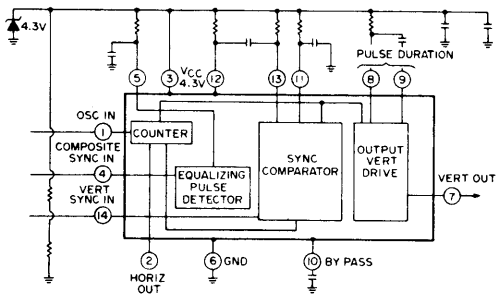

ECG794 Fig. 335

Vert driver.

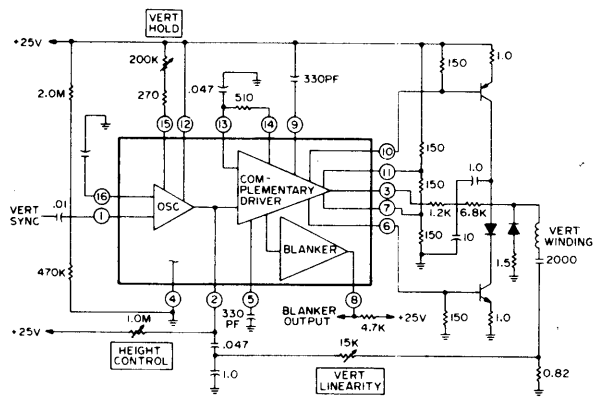

ECG795 Fig. 276

AGC control and IF amp.

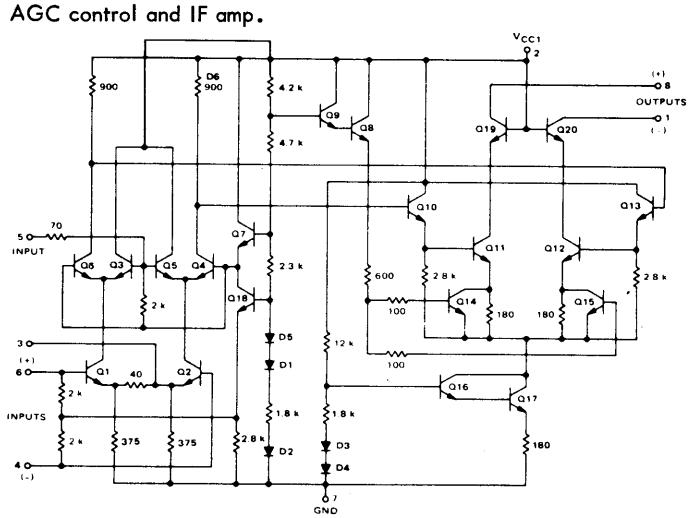

Linear IC and Module Circuits (cont'd)

ECG796 Fig. 278

Class B audio driver.

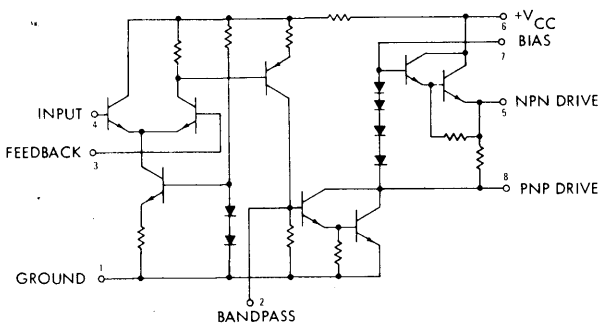

ECG797 Fig. 337

Chroma processor.

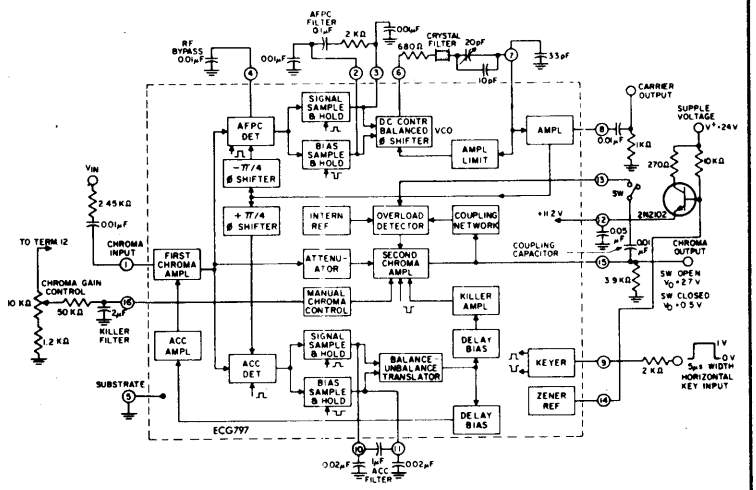

ECG798 Fig. 314

Chroma demod.

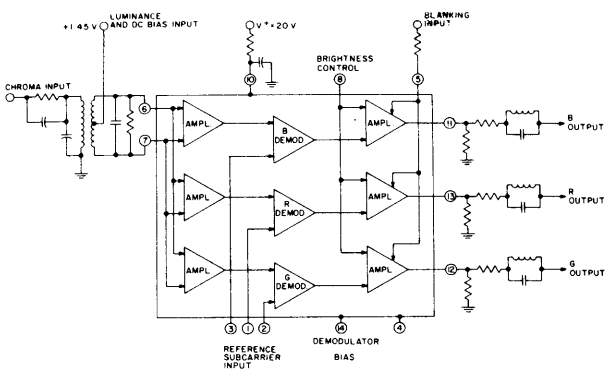

ECG799 Fig. 314

4-channel "SQ" stereo decoder.

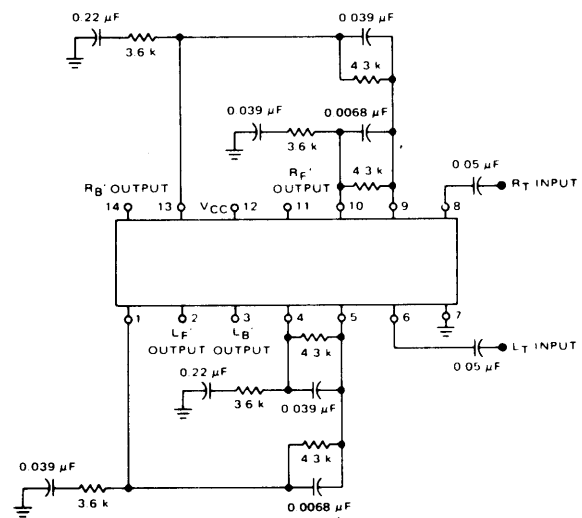

ECG801 Fig. 314

FM stereo demod, phase locked loop.

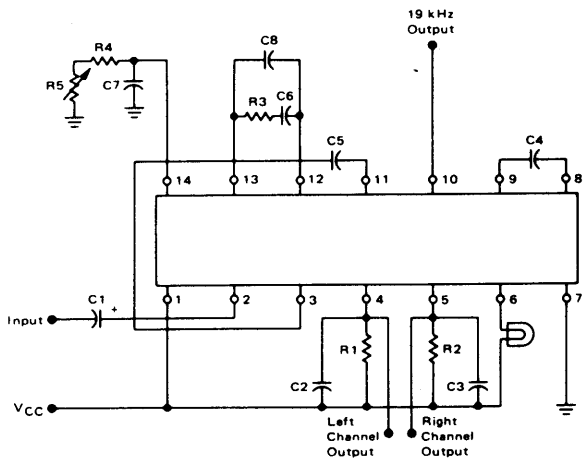

ECG802 Fig. 335

4-channel voltage controlled attenuator.

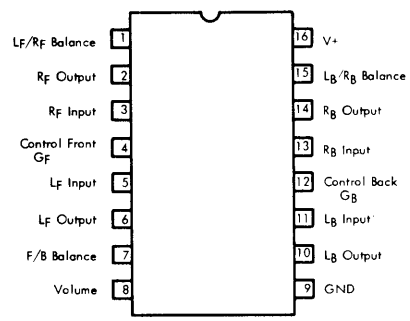

ECG803 Fig. 335

4-channel "SQ"-stereo DC logic - F/B enchancement.

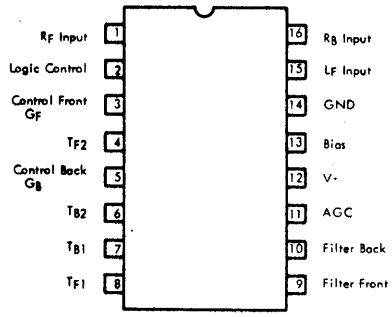

ECG804 Fig. 316 (Alternate Fig. 319)

Dual 2-watt audio amp.

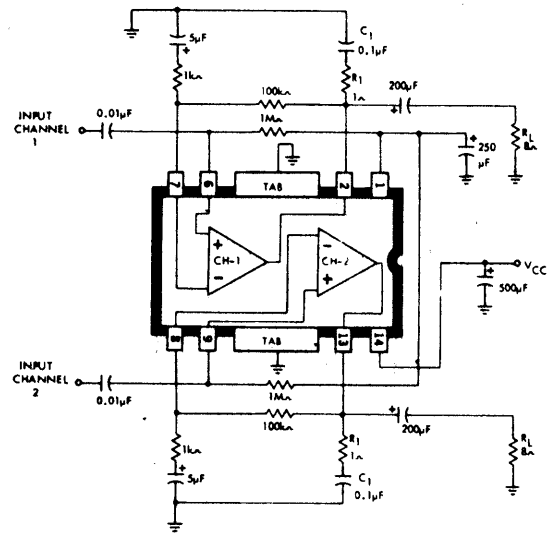

ECG805 Fig. 276

FM IF gain block.

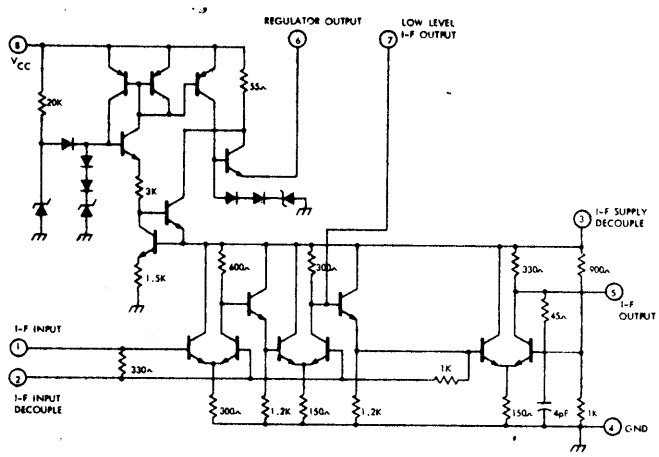

ECG806 Fig. 314

AM radio RF/IF amp.

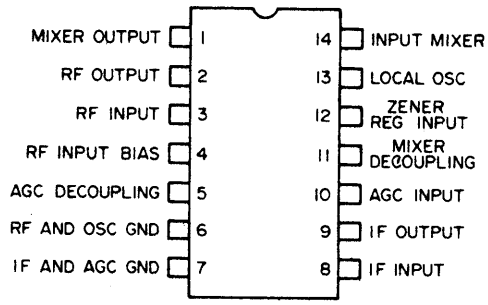

ECG807 Fig. 338

TV/FM sound system, 1 W, PO.

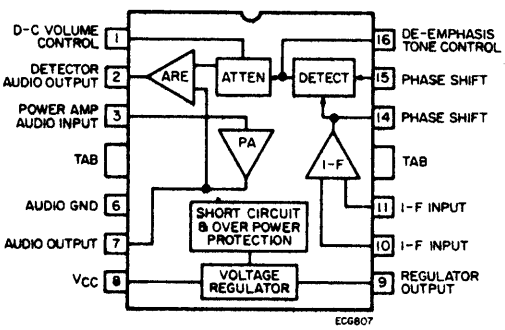

ECG812 Fig. 314

AF PO.

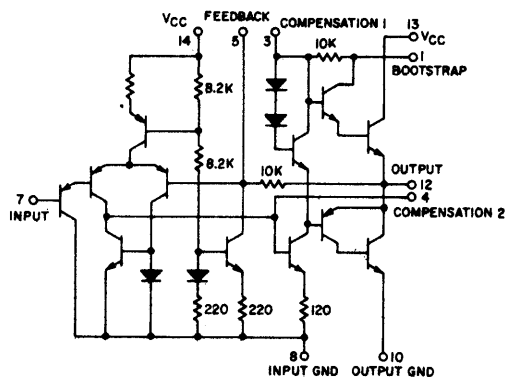

ECG813 Fig. 351

CD4 disc demodulation system with pre-amp.

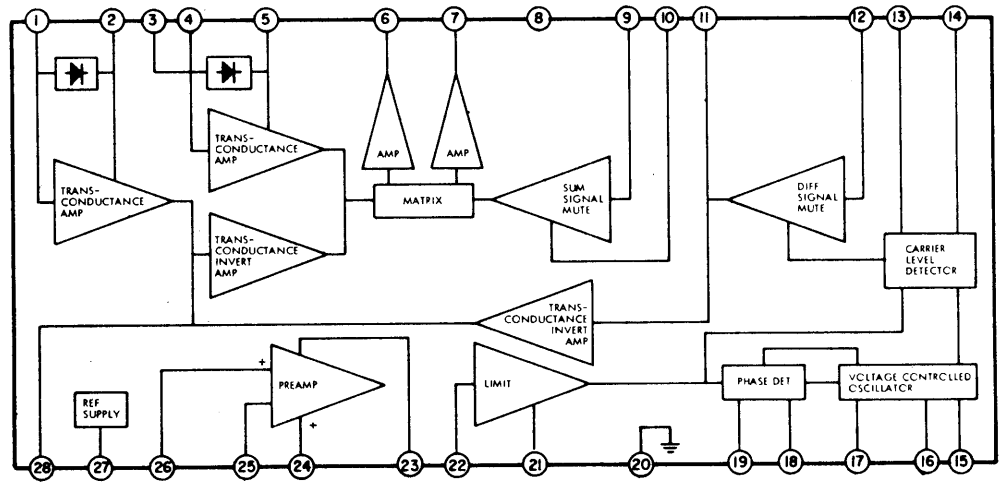

ECG814 Fig. 322

4 watt AF PO with pre-amp.

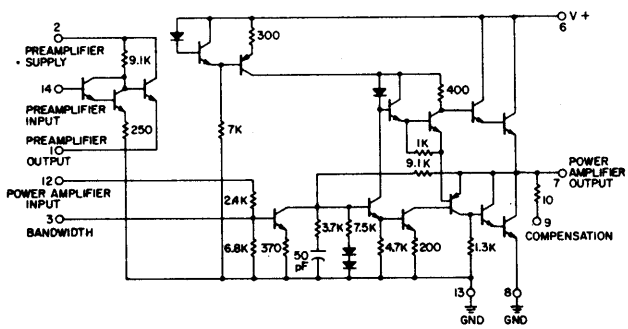

ECG815 Fig. 277

TV horiz processor.

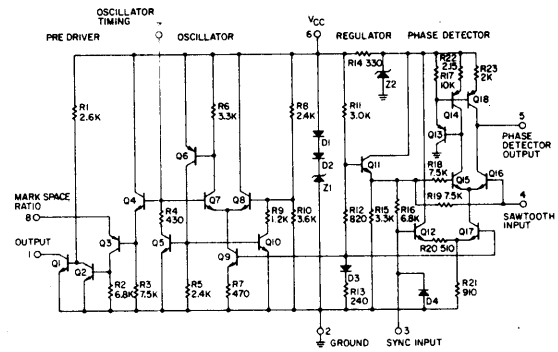

ECG816 Fig. 254

RF/IF amp.

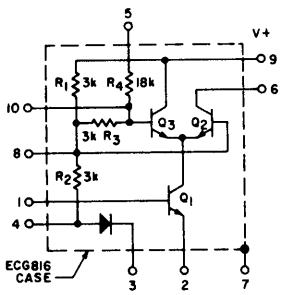

ECG817 Fig. 276

RF/IF amp.

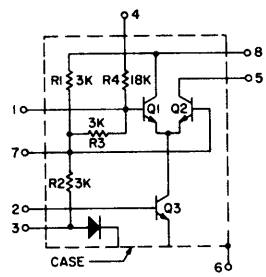

ECG818 Fig. 336

TV luminance processor.

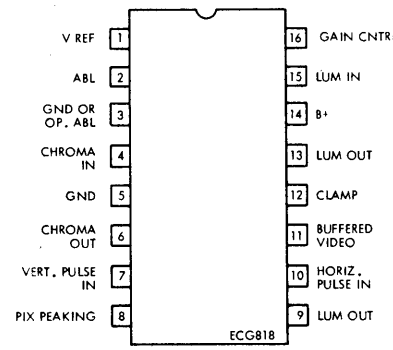

ECG819 Fig. 336

Chroma Amp and Demod

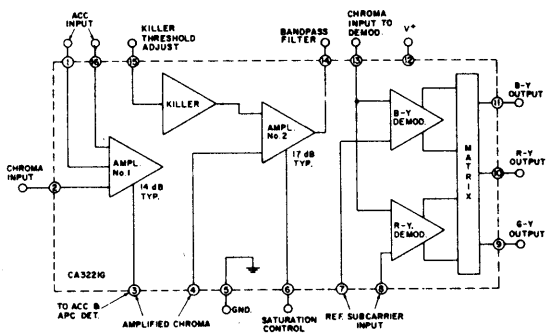

ECG820 Fig. 336

Horiz Osc and AGC

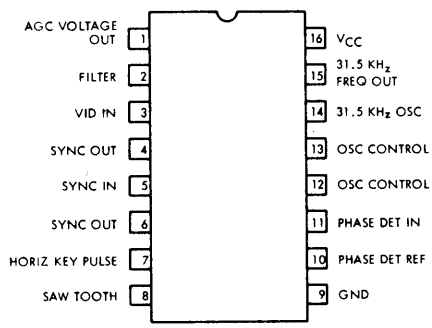

Linear IC and Module Circuits (cont'd)

ECG821 Fig. 314

Chroma Demod

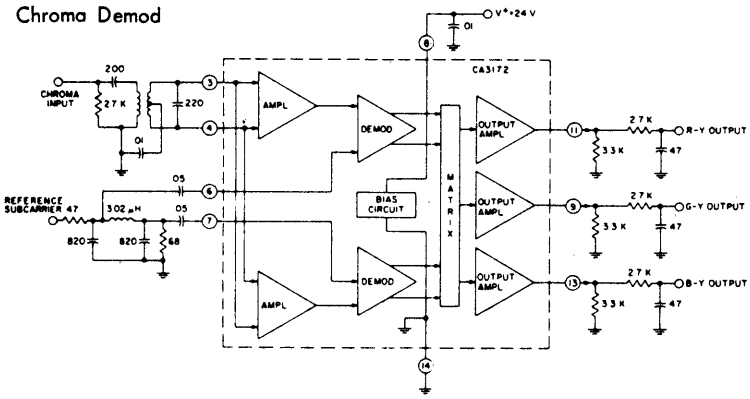

ECG823 Fig. 277

AF PO

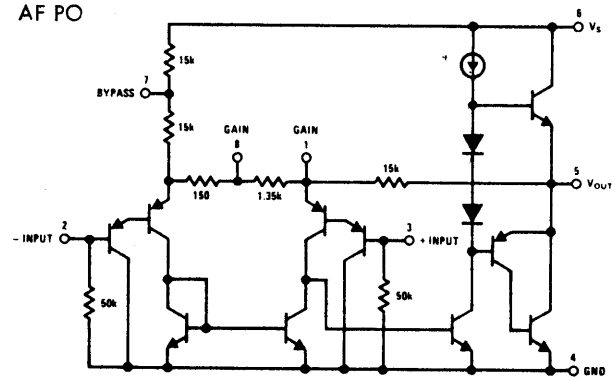

ECG824 Fig. 277

Dual AF Preamp

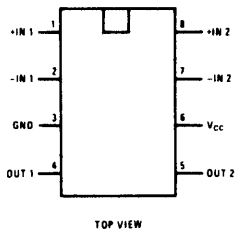

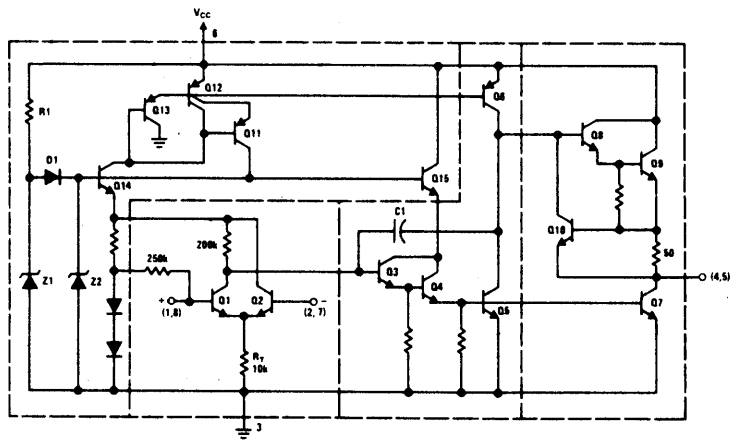

ECG825 Fig. 314

AF PO, 1 W

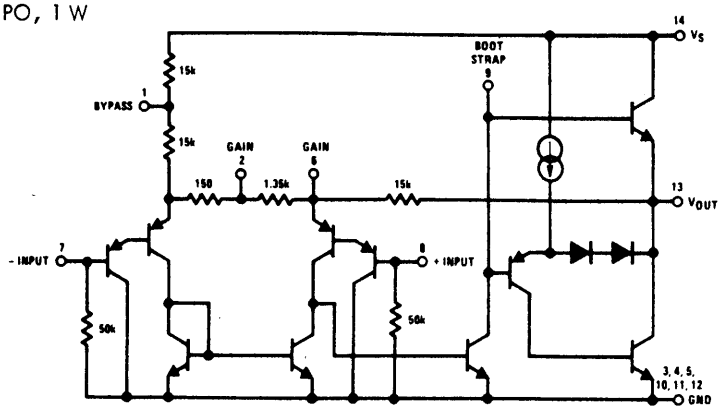

ECG826 Fig. 343

FM IF, AF PO, 2 W

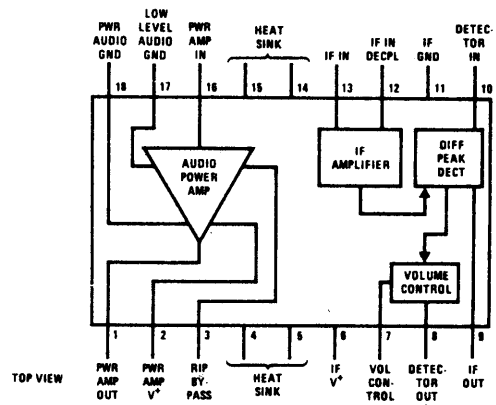

ECG830 Fig. 314

Horiz processor/vert countdown.

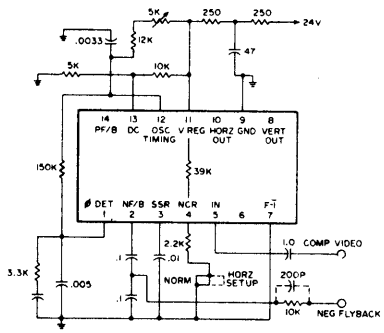

ECG832 Fig. 277

Tone decoder.

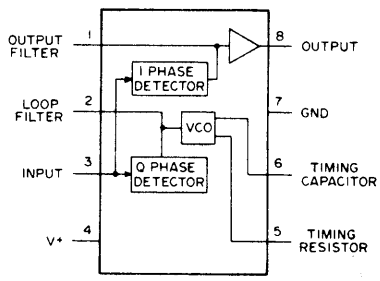

Linear IC and Module Circuits (cont'd)

ECG833 Fig. 277

Timing circuit.

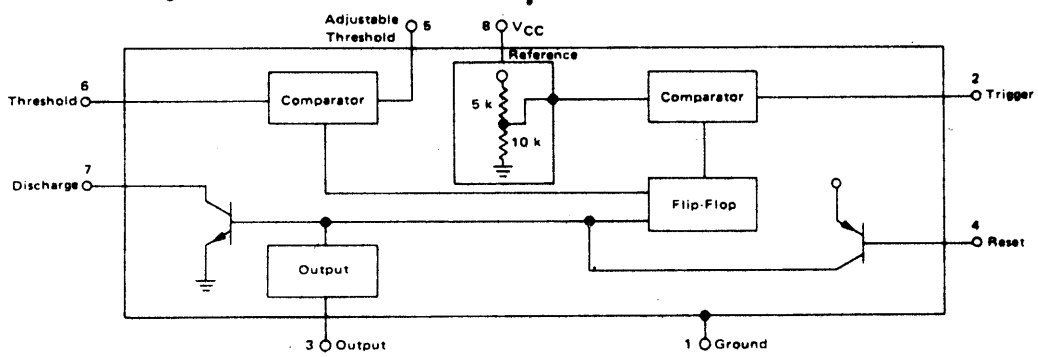

ECG834 Fig. 314

Quad comparator.

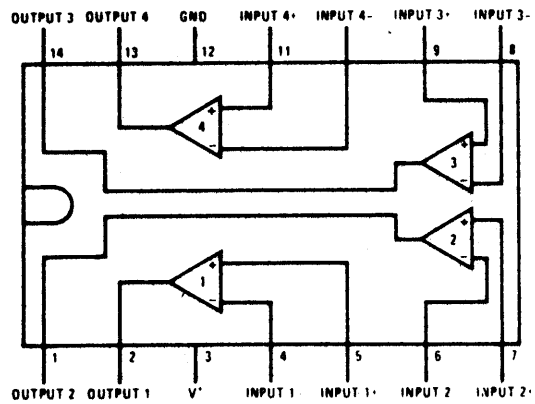

ECG900 Fig. 254

Balanced diff amp and DC amp.

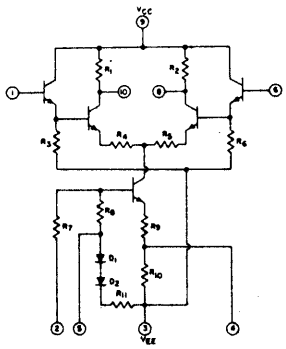

ECG901 Fig. 258

Video, wide-band amp.

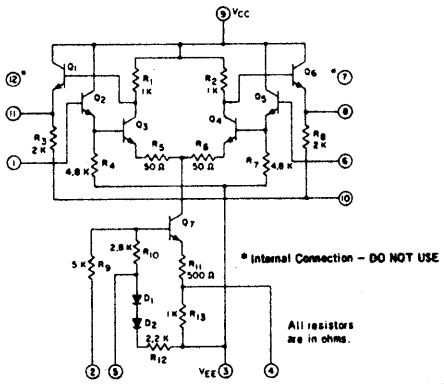

ECG903 Fig. 258

OP amp.

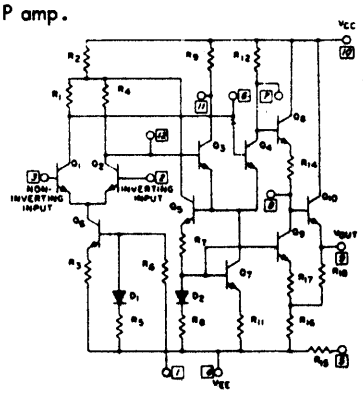

ECG904 Fig. 258

2 transistors and Darlington pair.

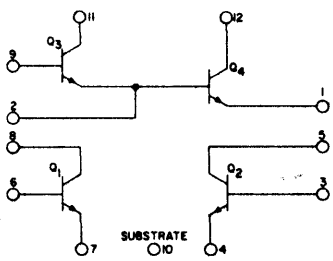

ECG905 Fig. 254

Diode "quad" plus 2 isolated diodes.

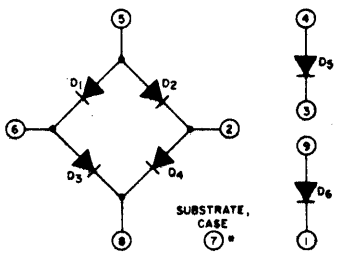

ECG906 Fig. 258

Dual HF diff amps for frequency up to 500 MHz.

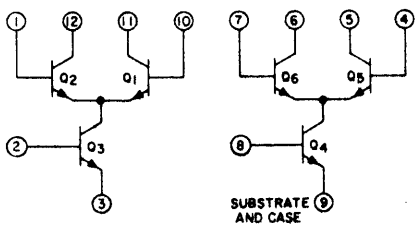

Linear IC and Module Circuits (cont'd)

ECG907 Fig. 258

Ultra fast matched diodes.

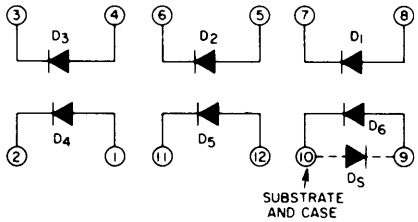

ECG908 Fig. 314

Op amp.

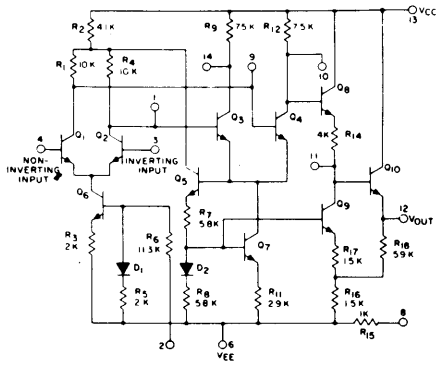

ECG909 Fig. 249

Hi-performance Op amp, 8-lead can.

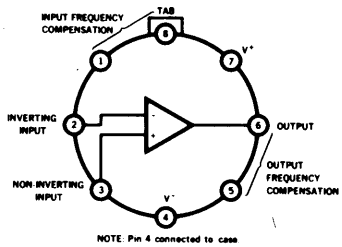

ECG909D Fig. 314

Same as ECG909, 14-lead DIP.

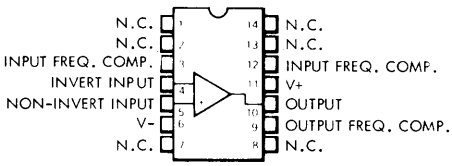

ECG910 Fig. 249

Hi-speed diff comparator, 8-lead can.

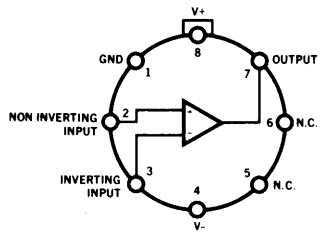

Note: Pin 4 connected to case

ECG910D Fig. 314

Same as ECG910, 14-lead DIP.

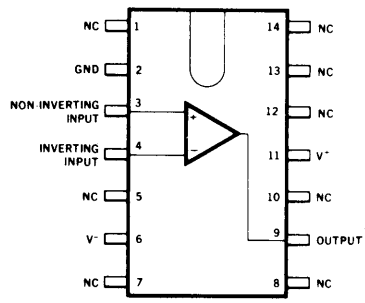

ECG911 Fig. 254

Dual hi-speed diff comparator, 10-lead can.

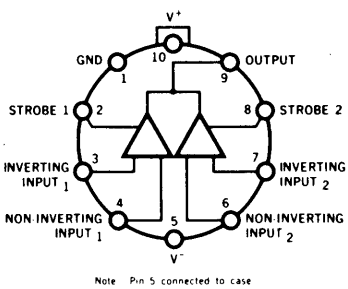

ECG911D Fig. 314

Same as ECG911, 14-lead DIP.

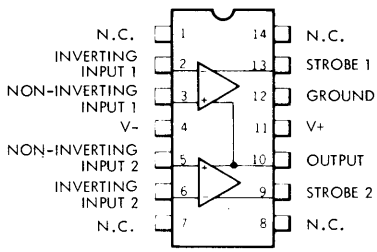

ECG912 Fig. 314

3 isolated transistors, 1 diff pair.

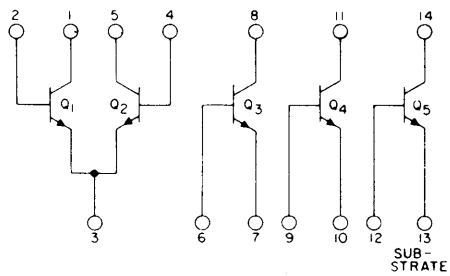

ECG913 Fig. 314

Op amp for hi-current application.

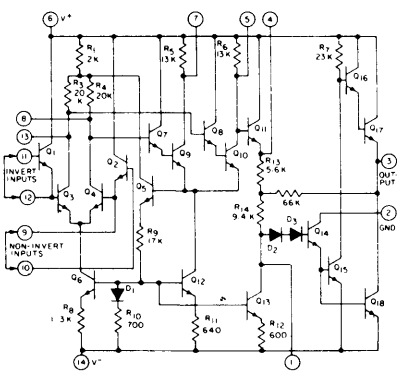

ECG914 Fig. 314

Zero voltage switch.

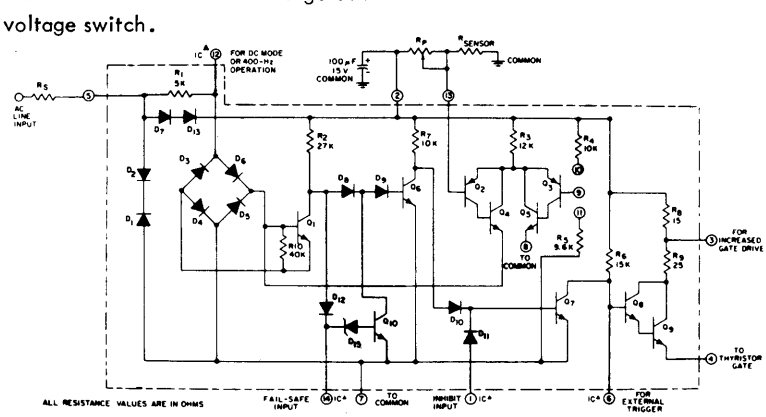

Linear IC and Module Circuits (cont'd)

ECG915 Fig. 254

Hi-speed Op amp, 10-lead can.

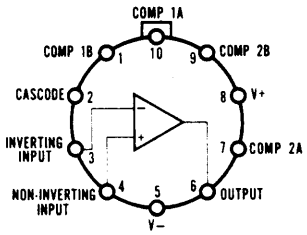

ECG916 Fig. 336

Transistor array for digital segment displays.

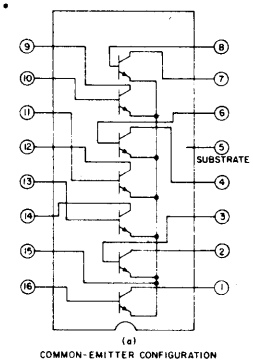

ECG917 Fig. 314

Dual diff amp. Lo-power application from DC to 120 MHz.

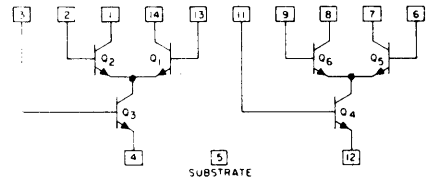

ECG923 Fig. 253

Precision VR, 10-lead can.

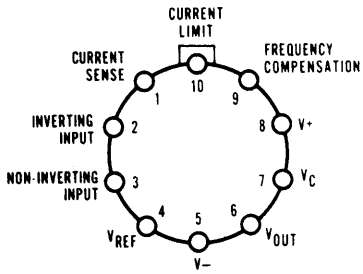

pin 5 is connected to case

ECG923D Fig. 314

Same as ECG923, 14-lead DIP.

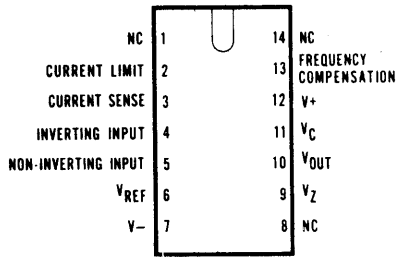

ECG925 Fig. 249

Instrumentation Op amp, 8-lead can.

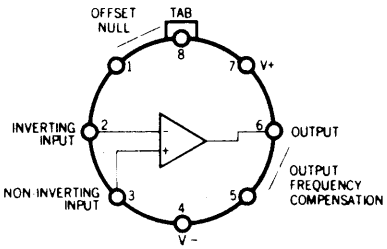

NOTE: Pin 4 connected to case

ECG940 Fig. 249

FET-input Op amp, 8-lead can.

ECG941

Freq-compensated Op amp, 8-lead can.

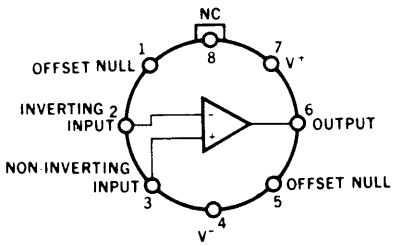

NOTE: PIN 4 CONNECTED TO CASE

ECG941D Fig. 314

Same as ECG941, 14-lead DIP.

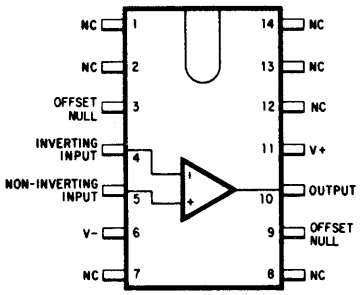

ECG941M Fig. 276

Same as ECG941, 8-lead "mini-DIP".

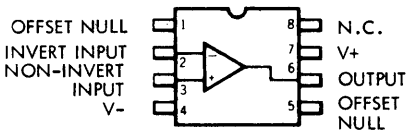

ECG946 Fig. 255

Positive power supply voltage regulator.

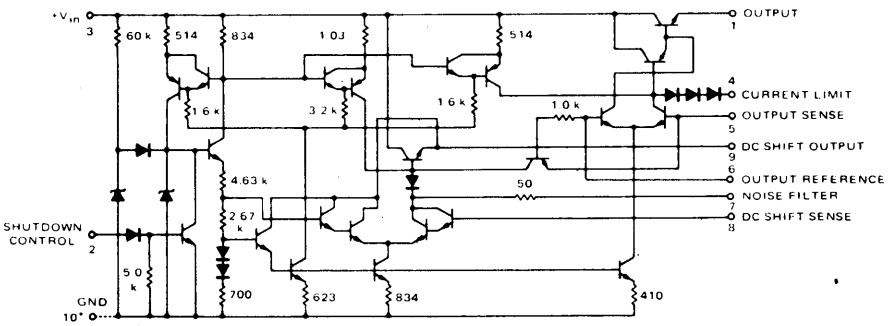

ECG947 Fig. 254

Dual, freq-compensated Op amp, 10-lead can.

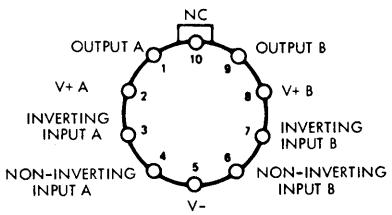

Linear IC and Module Circuits (cont'd)

ECG947D — Fig. 314

Same as ECG947, 14-lead DIP.

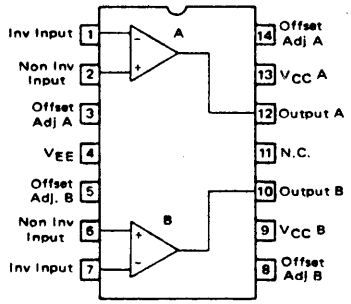

PINS 9 & 13 MUST BE TIED EXTERNALLY

ECG949 — Fig. 249

Dual Op amp, 8-lead can.

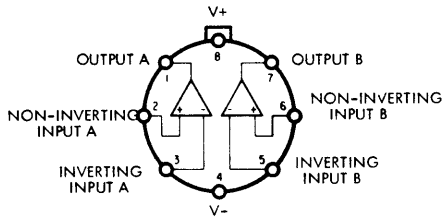

NOTE: PIN 4 CONNECTED TO CASE

ECG955M — Fig. 277

Timer/oscillator.

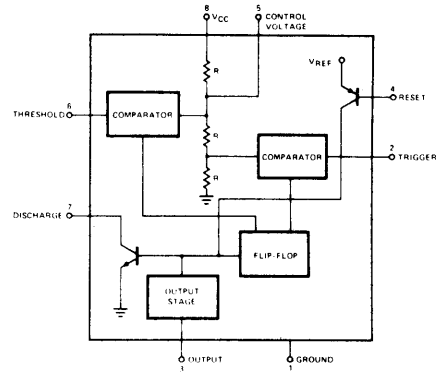

ECG960 — Fig. 247
POS volt reg, 5 V, 1 A

ECG962
POS volt reg, 6 V, 1 A

ECG964
POS volt reg, 8 V, 1 A

ECG966
POS volt reg, 12 V, 1 A

ECG968
POS volt reg, 15 V, 1 A

ECG972
POS volt reg, 24 V, 1 A

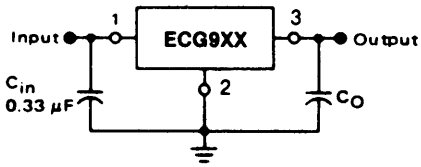

ECG961 — Fig. 247
NEG volt reg, 5 V, 1 A

ECG963
NEG volt reg, 6 V, 1 A

ECG967
NEG volt reg, 12 V, 1 A

ECG969
NEG volt reg, 15V, 1A

ECG971
NEG volt reg, 24 V, 1 A

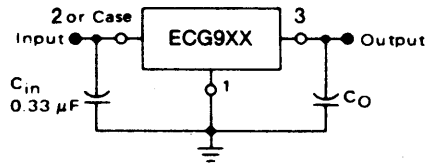

ECG973 — Fig. 254

Balanced modulator/demodulator.

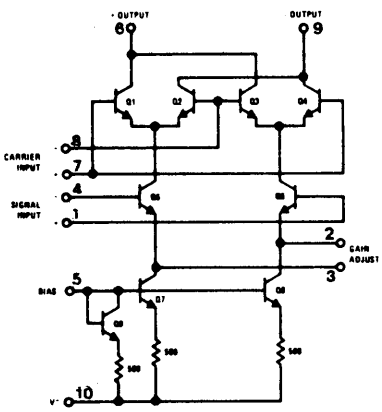

ECG974 — Fig. 314

Phase/frequency detector.

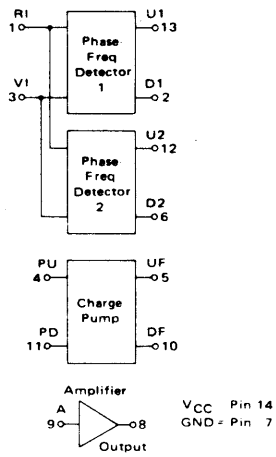

ECG975 — Fig. 277

Op amp.

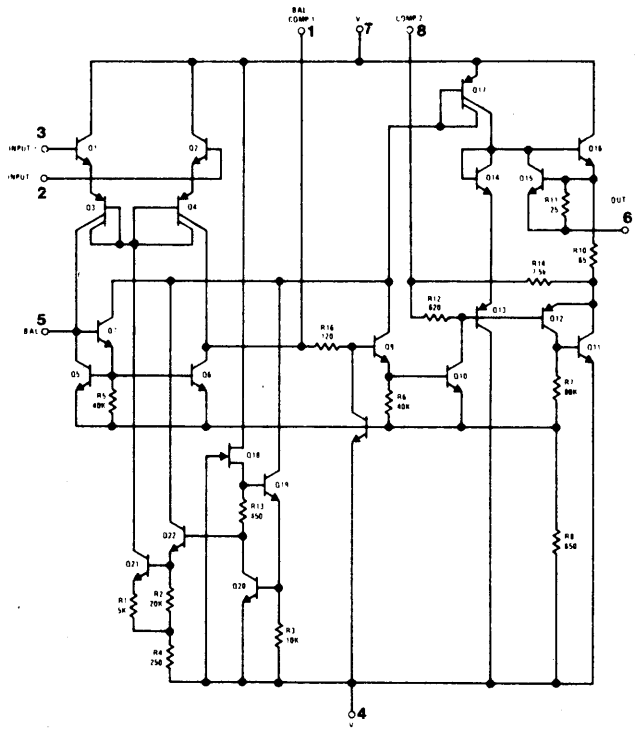

ECG973D — Fig. 314

Balanced Mod/Demod, 14-Pin DIP

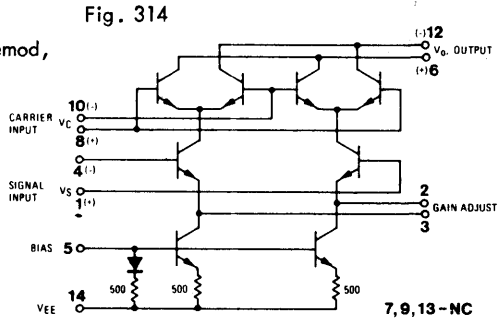

Linear IC and Module Circuits (cont'd)

ECG976 Fig. 276

Op amp.

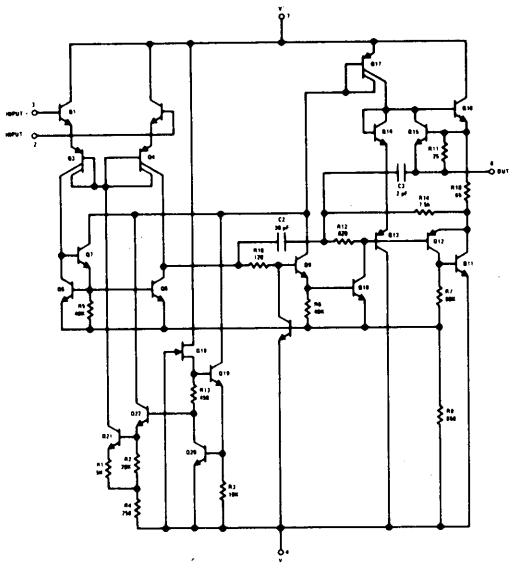

ECG977 Voltage reg, 5 V, 100 mA
ECG981 Voltage reg, 8 V, 100 mA

Fig. 246

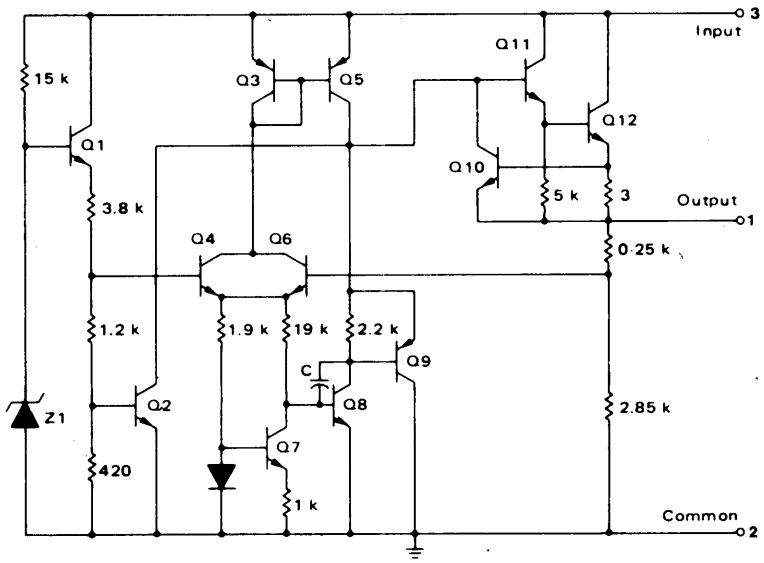

ECG978 Fig. 314

Dual timing circuit.

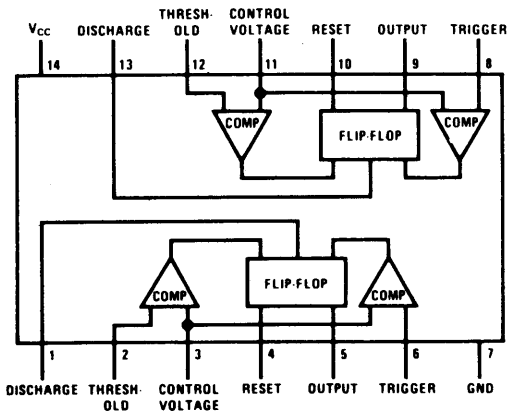

ECG979 Fig. 314

Zero crossing trigger.

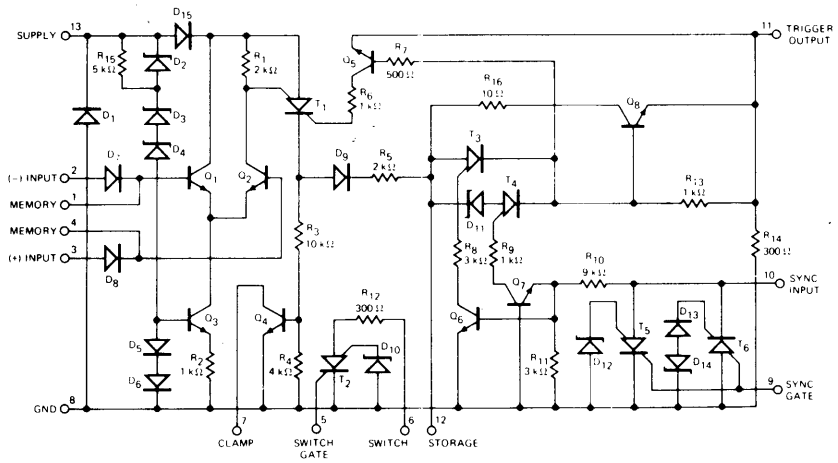

ECG980 Fig. 336

Phase locked loop.

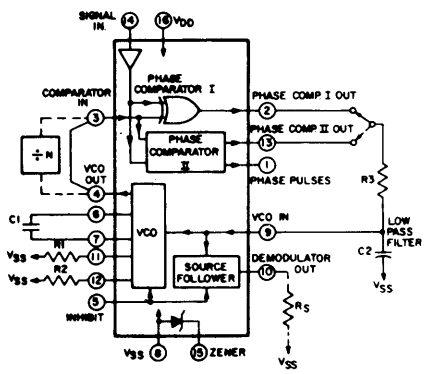

ECG982 Fig. 336

Subcarrier regenerator ACC, APC detector.

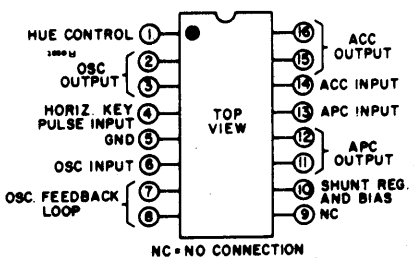

ECG983 Fig. 314

Dual Audio Preamp

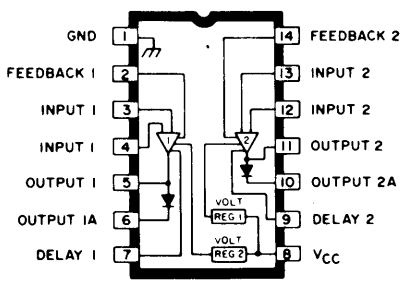

Linear IC and Module Circuits (cont'd)

ECG985 Fig. 336

Luminance Processor

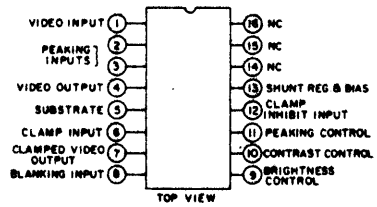

ECG986 Fig. 349

Chroma Processor and Demod

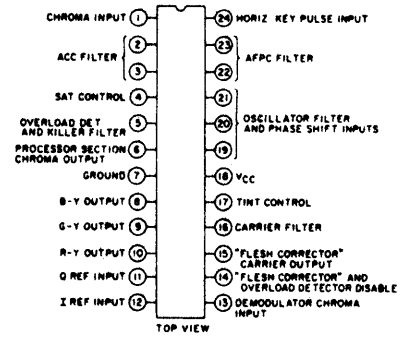

ECG987 Fig. 314

Quad Op Amp

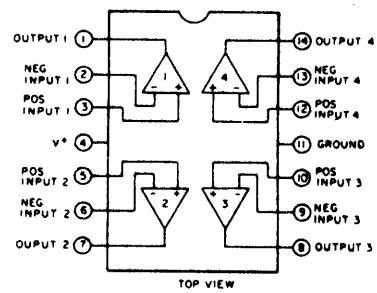

ECG988 Fig. 246

VR, 6.2 V, 100 mA

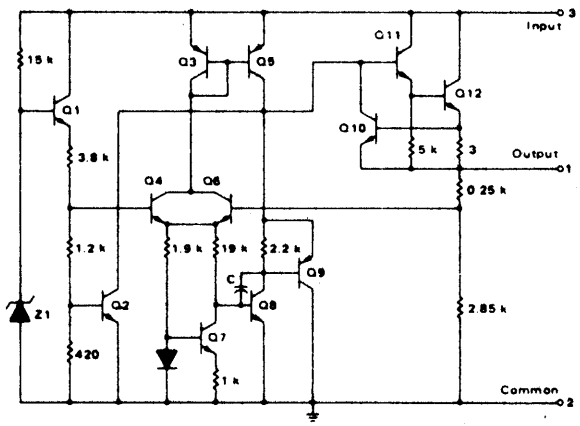

ECG989 Fig. 314

PLL, Gen Purpose

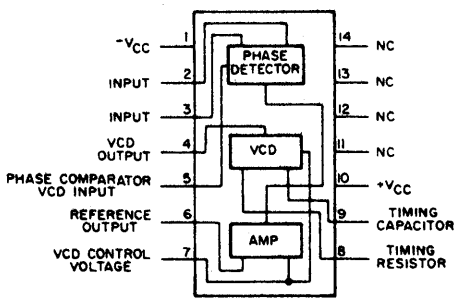

ECG990 Fig. 314

Dual AF PO, 2 W

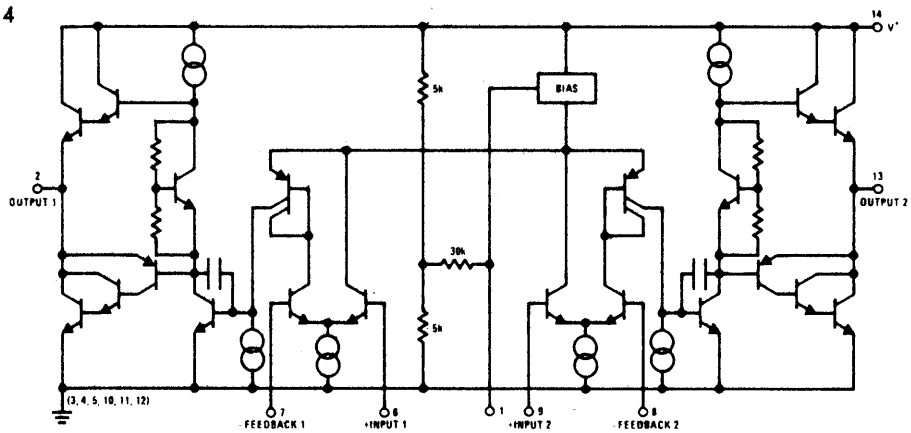

ECG992 Fig. 314

4 Independent Amps

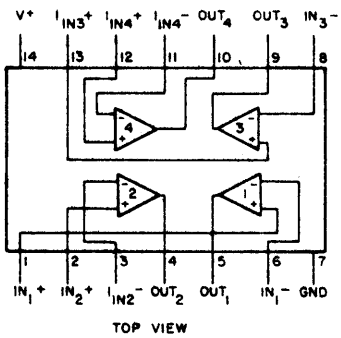

ECG1000 Fig. 271

Mod-Hybrid, lo-noise 12-volt AF pre-amp.

ECG1001

Mod-Hybrid, lo-noise 6-volt AF pre-amp.

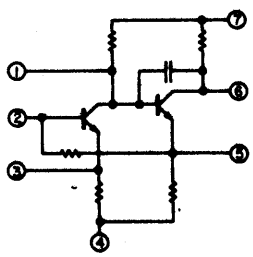

Linear IC and Module Circuits (cont'd)

ECG1002 Fig. 249

FM/TV IF amp.

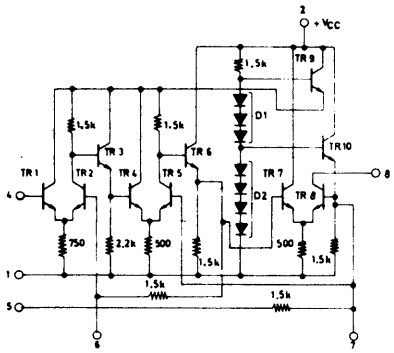

ECG1003 Fig. 314

FM/AM IF amp.

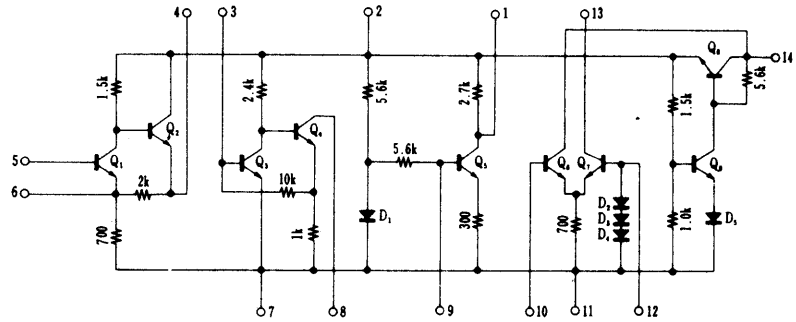

ECG1004 Fig. 315

AFT system for TV.

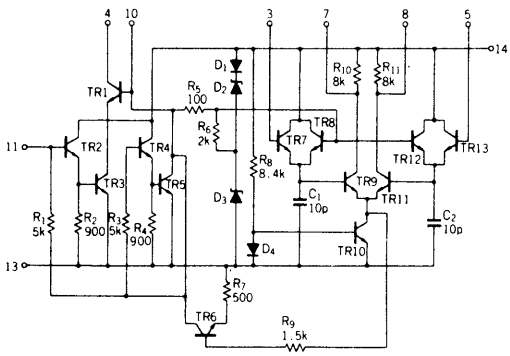

ECG1005 Fig. 314

FM stereo demod.

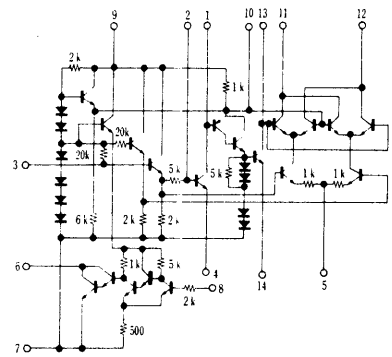

ECG1006 Fig. 314

FM stereo demod.

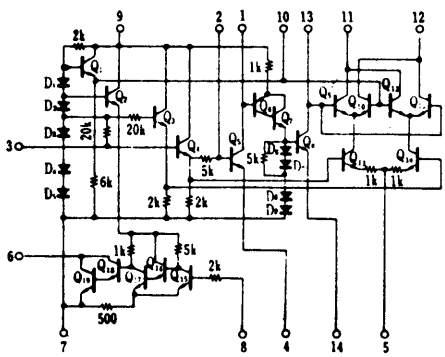

ECG1007 Fig. 260

AF PO.

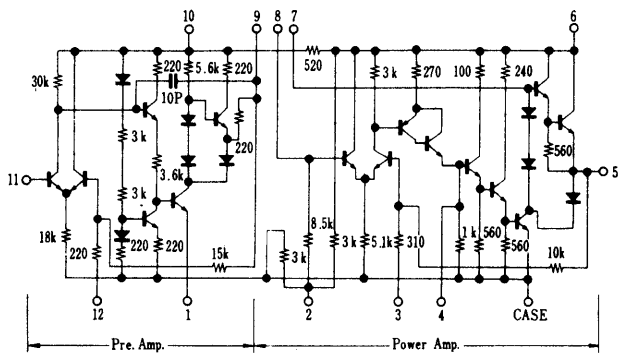

ECG1008 Fig. 256

1 W AF amp.

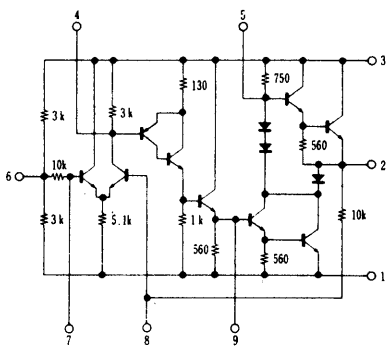

ECG1009 Fig. 282

1 W AF amp.

ECG1010

2 W AF amp.

ECG1011

2.5 W AF amp.

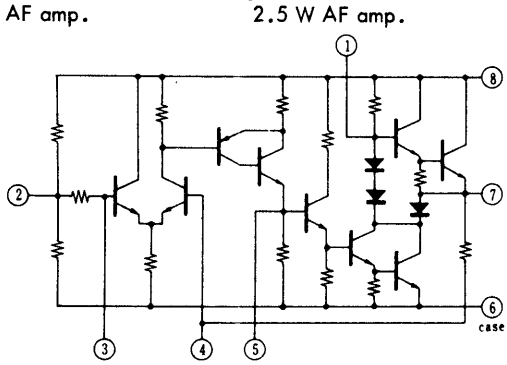

Linear IC and Module Circuits (cont'd)

ECG1012 Fig. 266

Mod-Hybrid, CB Osc/AM IF.

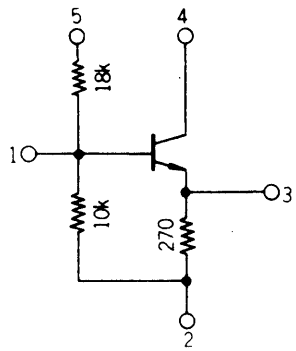

ECG1013 Fig. 289

Mod-Hybrid, AM IF amp/AF pre-amp.

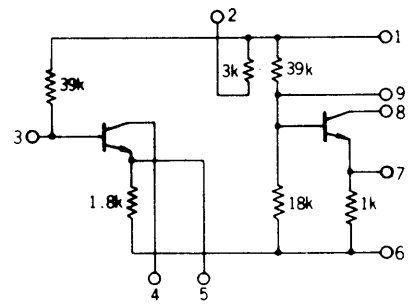

ECG1014 Fig. 290

Mod-Hybrid, RF amp/Osc of FM wireless mic.

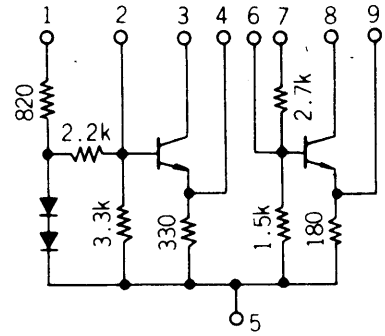

ECG1015 Fig. 288

Mod-Hybrid, lo-noise AF pre-amp.

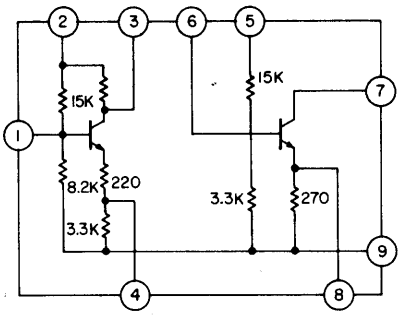

ECG1016 Fig. 289

Mod-Hybrid, AF pre-amp.

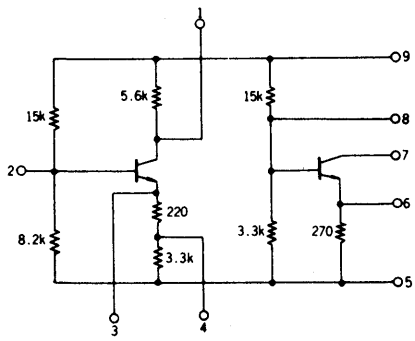

ECG1017 Fig. 263

Mod-Hybrid, AF amp for wireless mic.

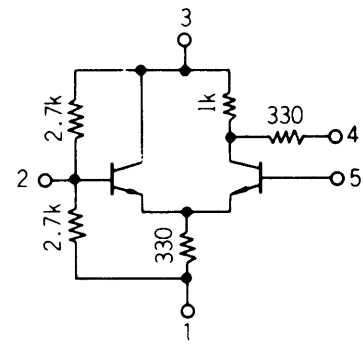

ECG1018 Fig. 313

Mod-Hybrid, hor Osc/AFC.

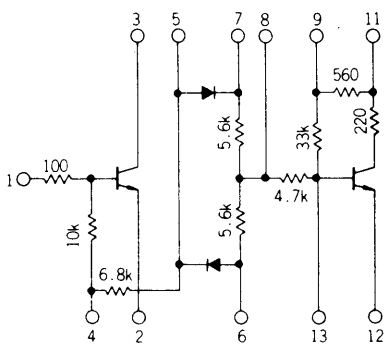

ECG1019 Fig. 289

Mod-Hybrid, lo-noise audio equalizing amp.

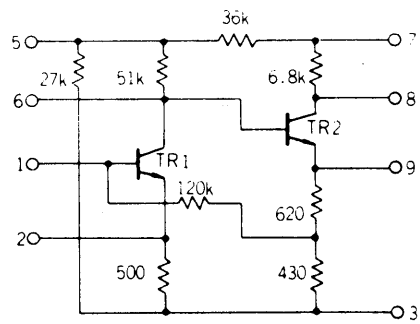

ECG1020 Fig. 289

Mod-Hybrid, lo-noise AF amp.

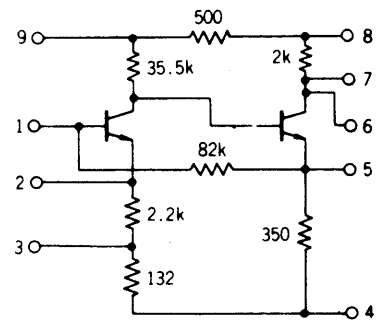

ECG1021 Fig. 289

Mod-Hybrid, lo-noise audio equalizing amp.

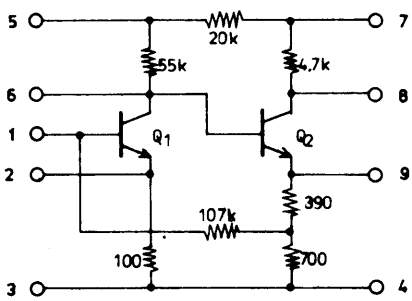

ECG1022 Fig. 335

4-Channel stereo matrix decoder.

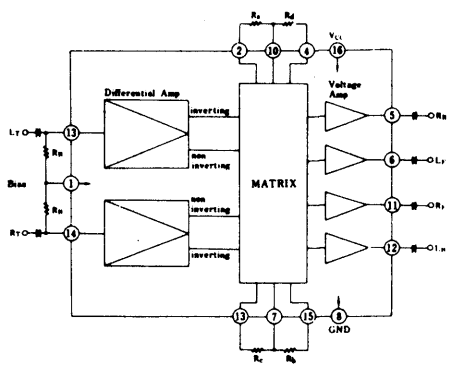

ECG1023 Fig. 321

4 W audio amp.

ECG1107

4.8 W Audio Amp

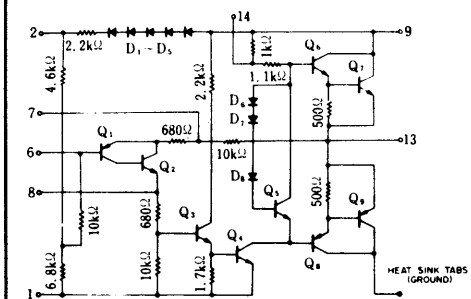

Linear IC and Module Circuits (cont'd)

ECG1024 Fig. 306

Mod-Hybrid, 8 W audio amp.

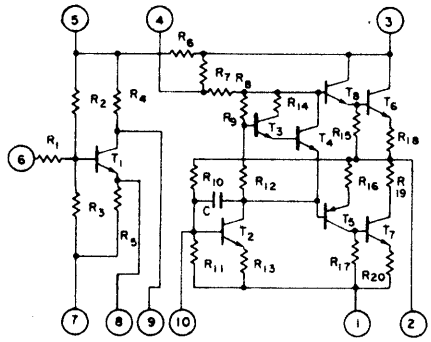

ECG1025 Fig. 304

Mod-Hybrid, 10 W (min) audio amp.

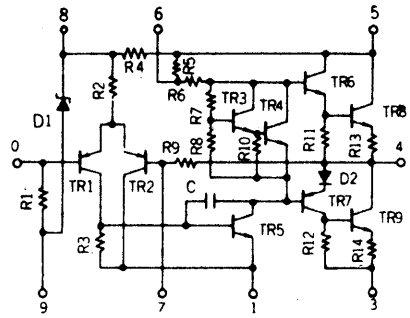

ECG1026 Fig. 289

Mod-Hybrid, master osc/buffer for organs.

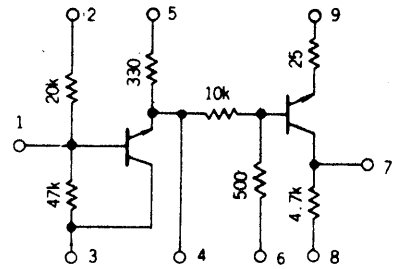

ECG1027 Fig. 306

Mod-Hybrid, 13 W audio amp.

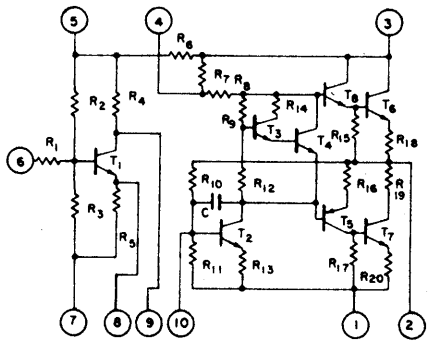

ECG1028 Fig. 305

Mod-Hybrid, 20 W (min) audio amp.

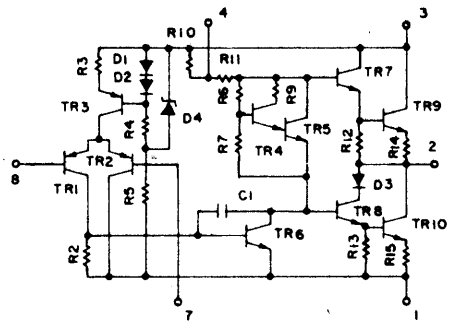

ECG1029 Fig. 294

3.5 W audio amp.

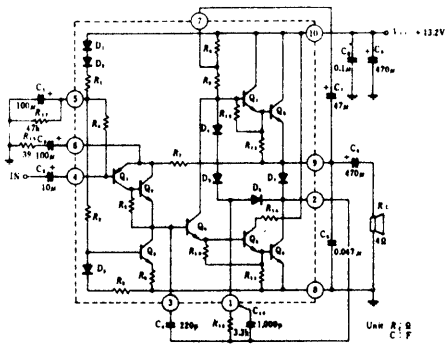

ECG1030 Fig. 294

5 W audio amp.

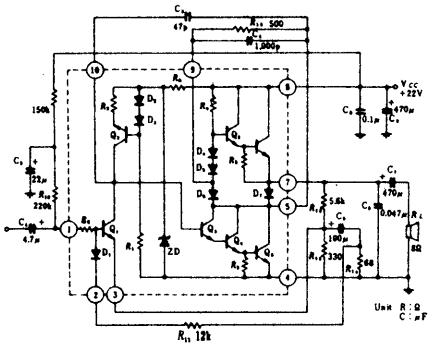

ECG1031 Fig. 309

0.5 W audio amp.

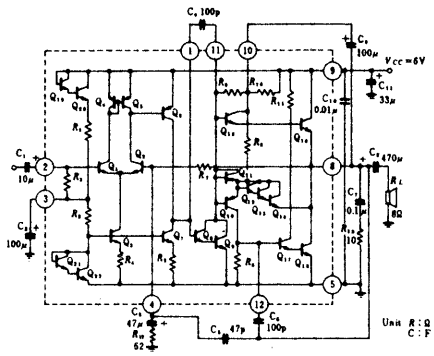

ECG1032 Fig. 309

1 W audio amp.

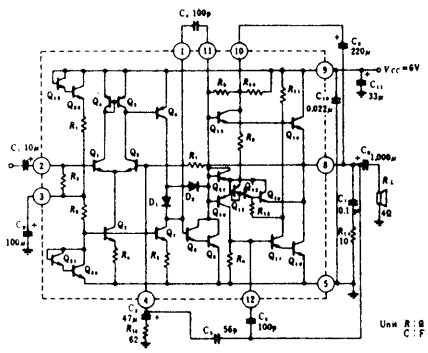

ECG1033 Fig. 309

1 W audio amp.

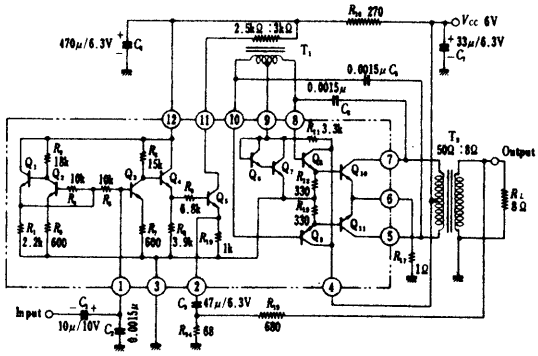

ECG1034 Fig. 309

2 W audio amp.

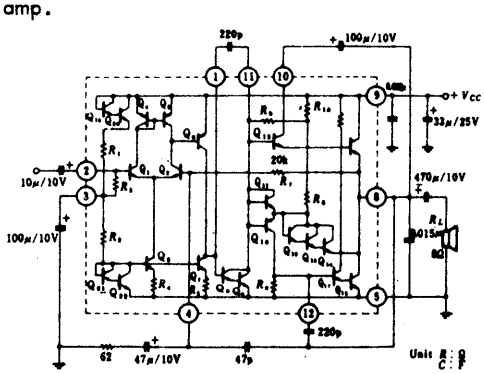

Linear IC and Module Circuits (cont'd)

ECG1035 Fig. 309

1 W audio amp.

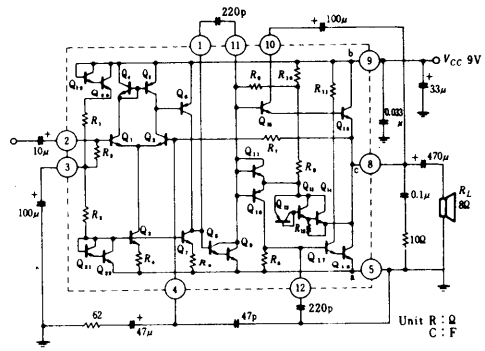

ECG1036 Fig. 309

0.7 W audio amp.

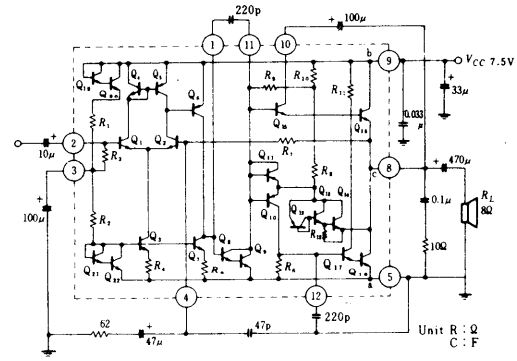

ECG1037 Fig. 294

5.5 W audio amp.

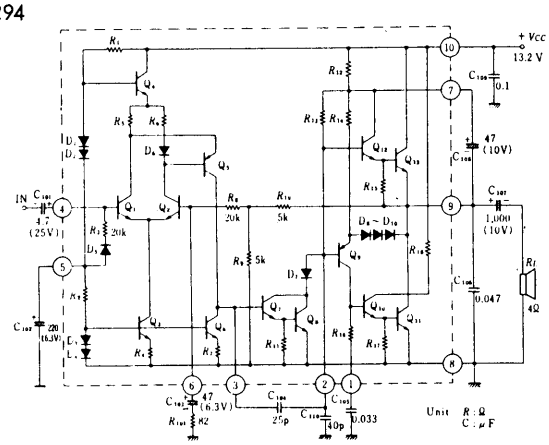

ECG1039 Fig. 276

FM IF amp.

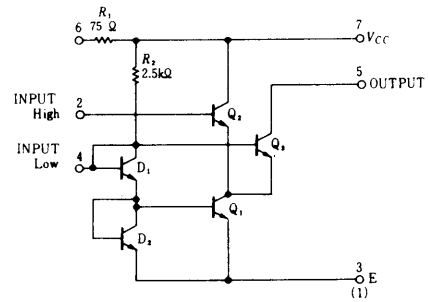

ECG1040 Fig. 285

Mod-FM IF amp.

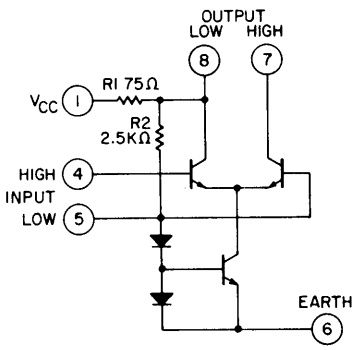

ECG1041 Fig. 276

IF amp.

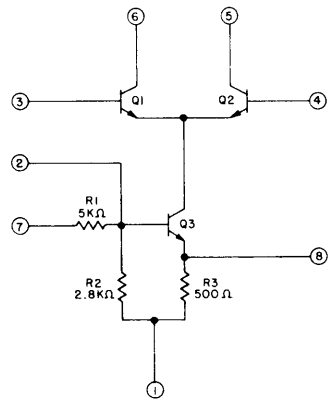

ECG1042 Fig. 276

3 stage FM IF amp.

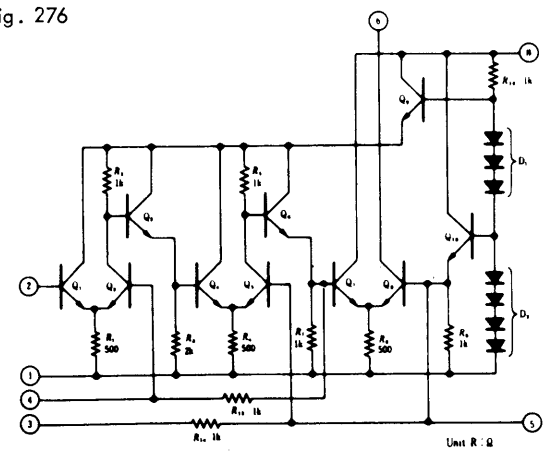

Linear IC and Module Circuits (cont'd)

ECG1043 Fig. 314

Audio pre-amp and 1 W audio output.

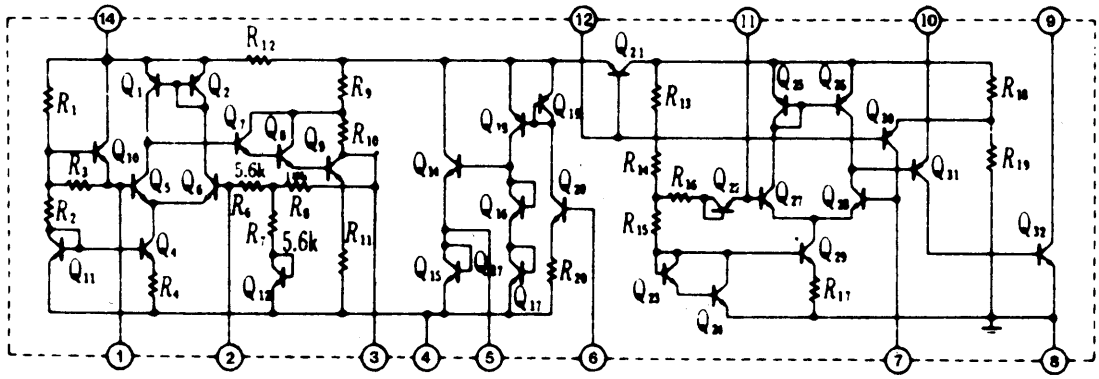

ECG1045 Fig. 314

FM/TV sound IF detector/amp.

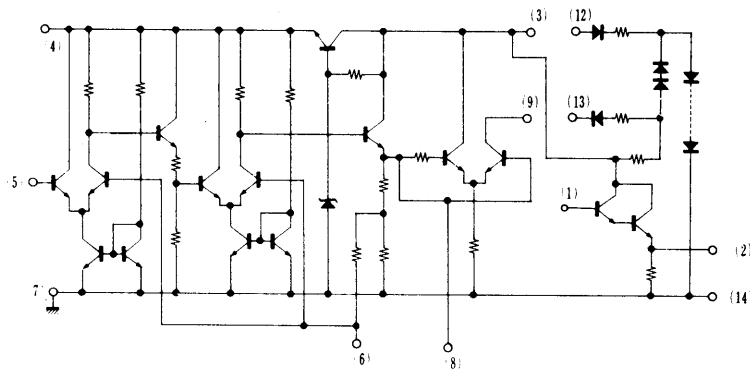

ECG1046 Fig. 314

TV AFT.

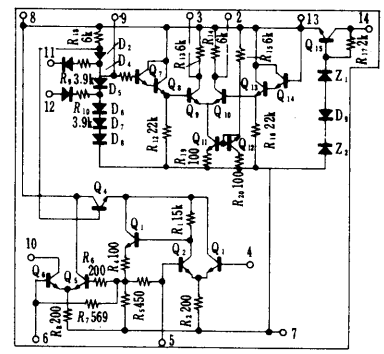

ECG1047 Fig. 314

TV sound IF/FM det/AF pre-amp.

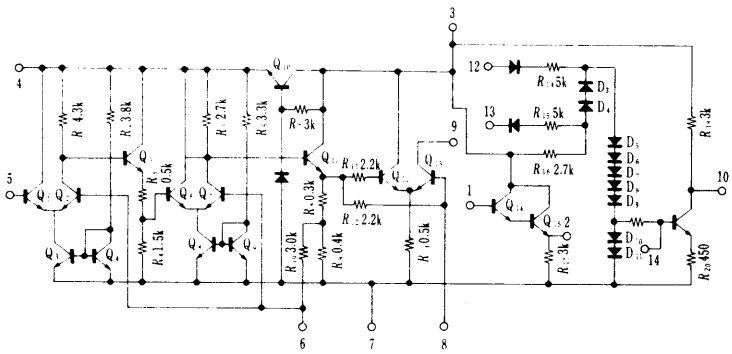

ECG1048 Fig. 327

Chroma demod.

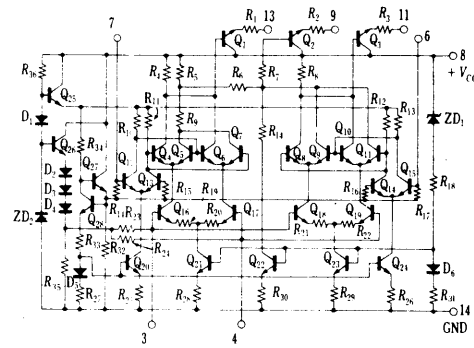

ECG1049 Fig. 335

AM radio tuner with RF amp.

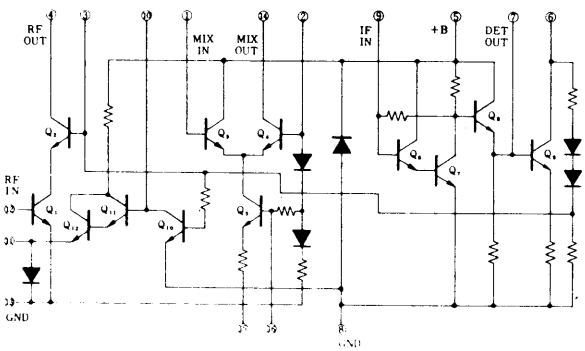

ECG1050 Fig. 327

Chroma demod.

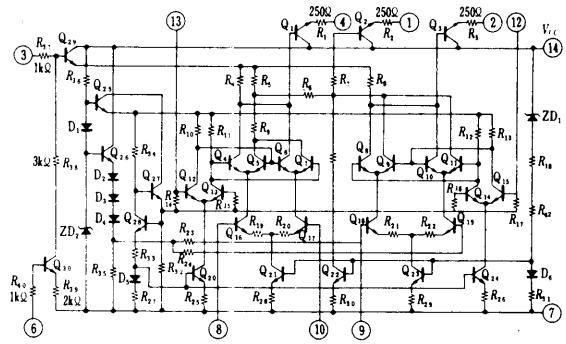

Linear IC and Module Circuits (cont'd)

ECG1051 Fig. 314

TV sound IF/FM det/AG pre-amp.

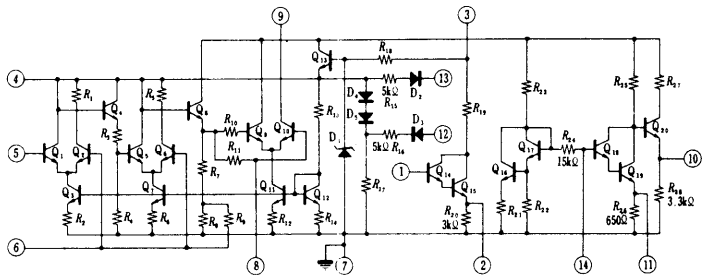

ECG1052 Fig. 270

Mod-lo-noise audio pre-amp and equalizer.

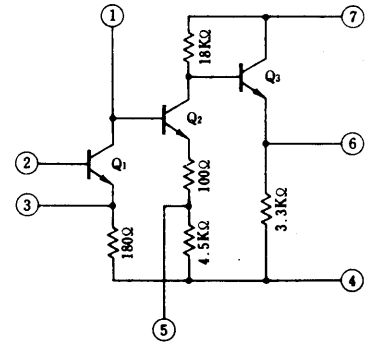

ECG1053 Fig. 252

Lo-noise/hi-gain audio pre-amp.

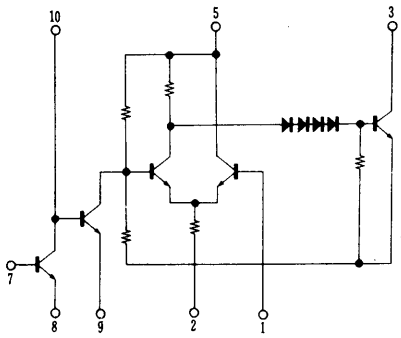

ECG1054

ECG1055

Fig. 314

AM/FM IF amp.

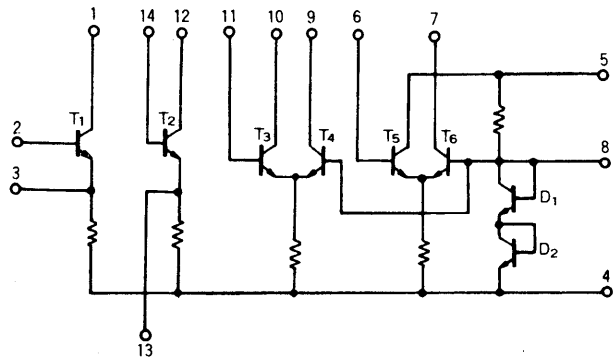

ECG1056 Fig. 314

FM stereo demod.

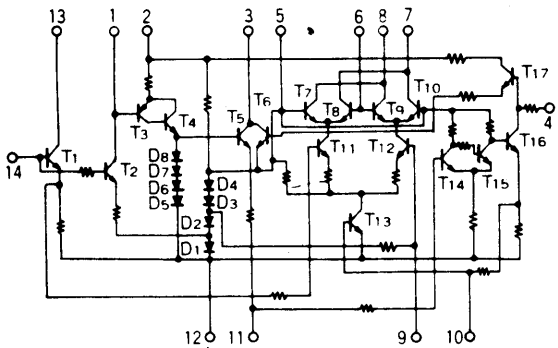

ECG1057 Fig. 314

FM IF amp/det/AF pre-amp.

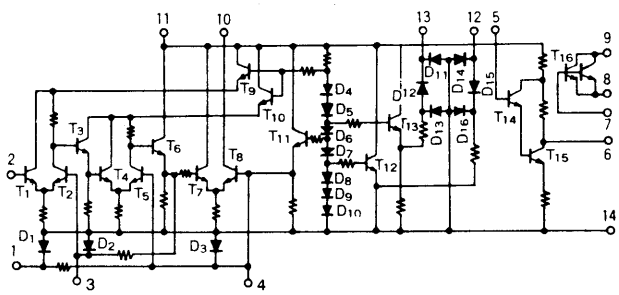

ECG1058 Fig. 291

Audio pre-amp and 4.4 watt power amp.

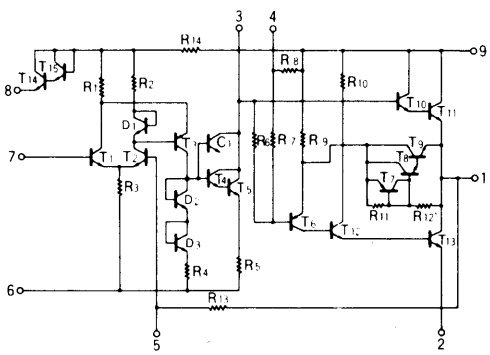

ECG1059 Fig. 261

AF power driver.

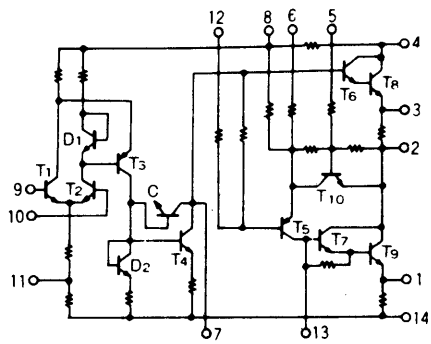

Linear IC and Module Circuits (cont'd)

ECG1060 Fig. 336

AM RF amp/mxr/osc and AF/FM IF amp.

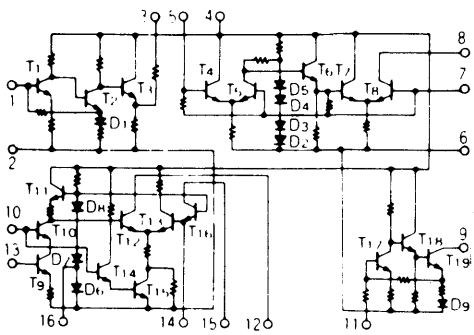

ECG1061 Fig. 314

TV AFT.

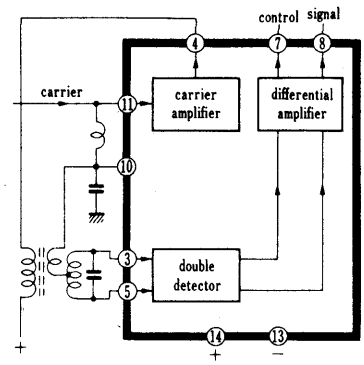

ECG1062 Fig. 314

Chroma demod.

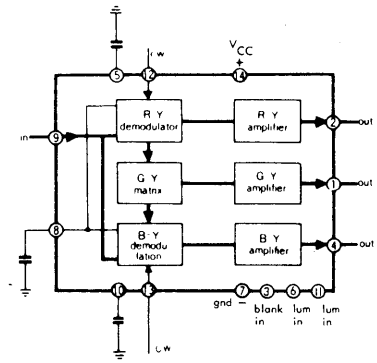

ECG1063 Fig. 314

Chroma demod.

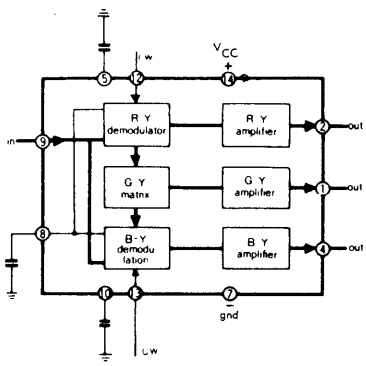

ECG1064 ECG1065 ECG1066 Fig. 336

TV vid sig processor.

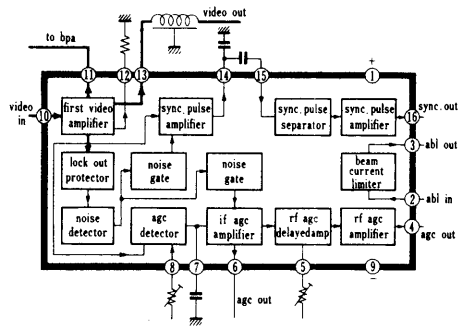

ECG1067 Fig. 336

Chroma sig processor.

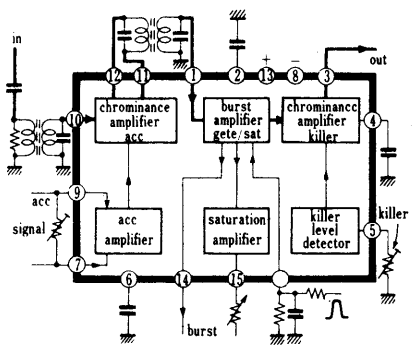

ECG1068 Fig. 336

Chroma demod.

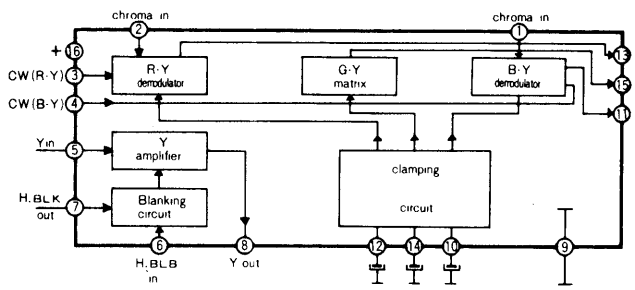

ECG1069 Fig. 314

Chroma processor.

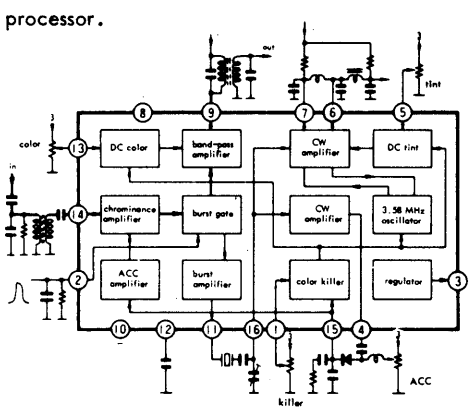

ECG1070 Fig. 336

Vid sig processor.

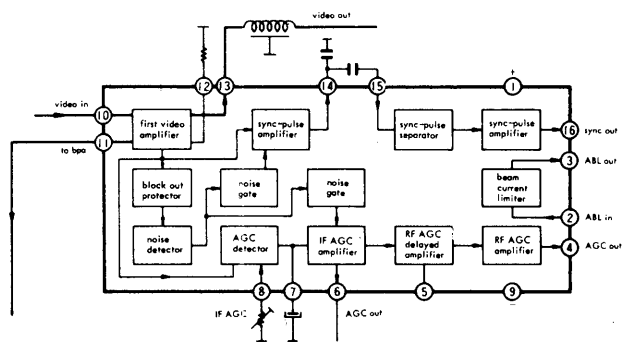

Linear IC and Module Circuits (cont'd)

ECG1071 Fig. 336

Chroma demod.

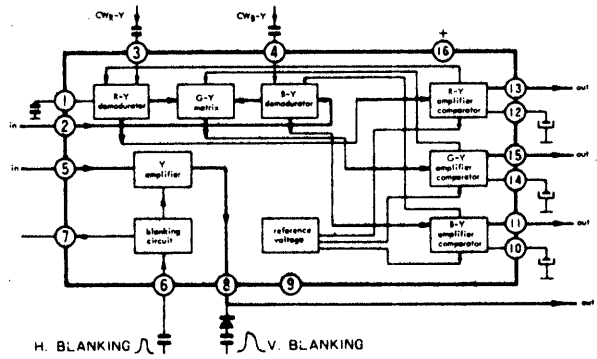

ECG1072 Fig. 336

FM/AM IF amp and AF pre-amp.

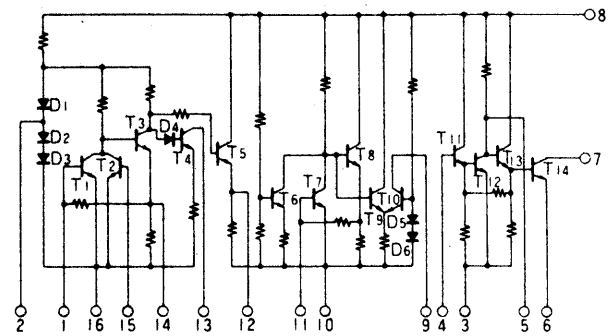

ECG1073 Fig. 336

AM RF amp/mxr/osc and FM/AM IF amp.

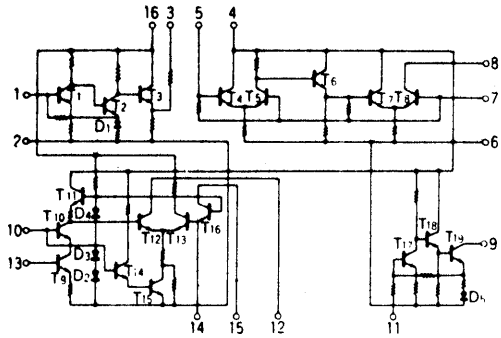

ECG1074 Fig. 314

FM/AM IF amp/AM/mxr osc and tuning master dr.

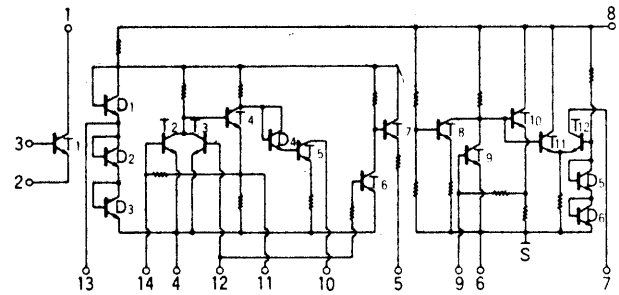

ECG1075A Fig. 327

1.0 W audio amp.

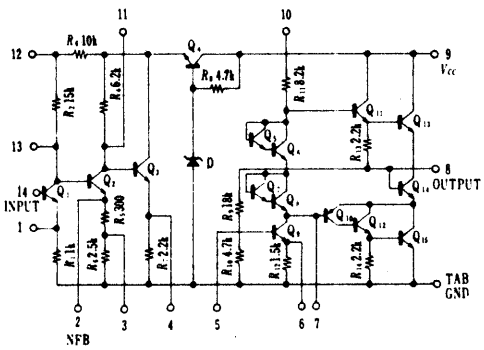

ECG1076 Fig. 314

TV vid IF, output detector, AFT, take-off ckt.

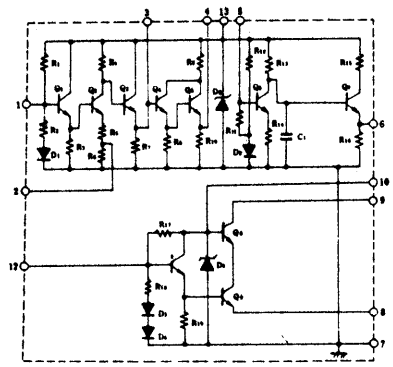

ECG1077 Fig. 314

Vert osc, AFC/vert dr.

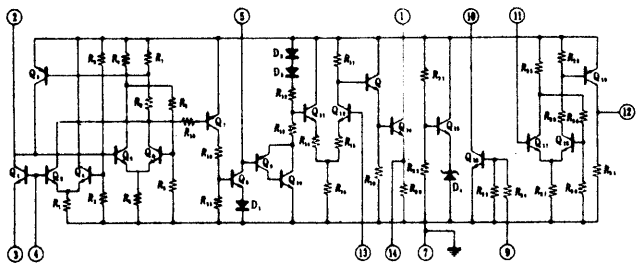

ECG1078 Fig. 330

6.5 W audio amp.

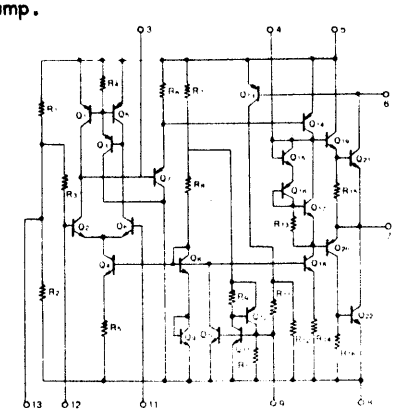

Linear IC and Module Circuits (cont'd)

ECG1079 Fig. 314

Vert osc/dr.

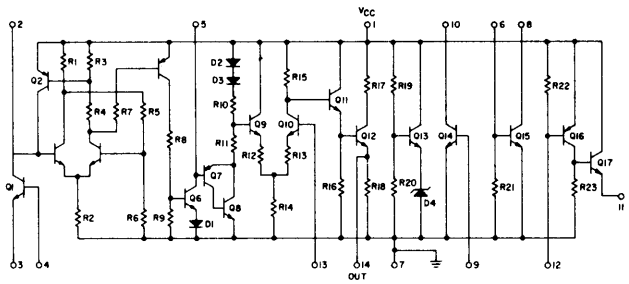

ECG1080 Fig. 314

TV vid processor.

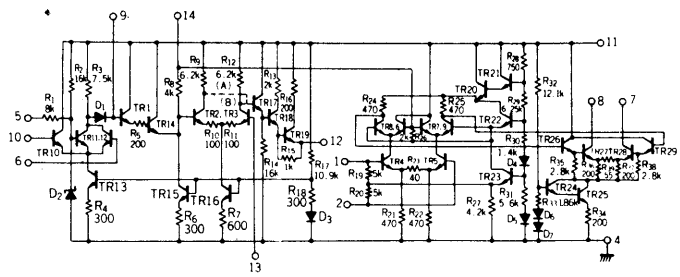

ECG1081A Fig. 300

4.8 W audio amp.

ECG1081A TERMINALS

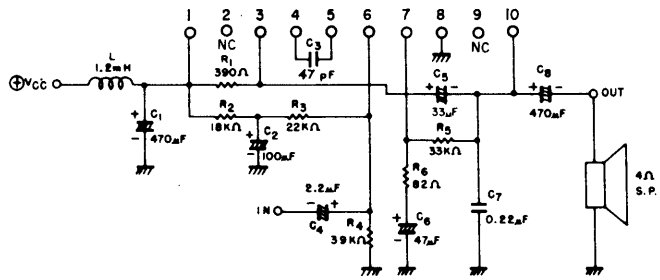

ECG1082 Fig. 270

Mod-AF equalizer and pre-amp.

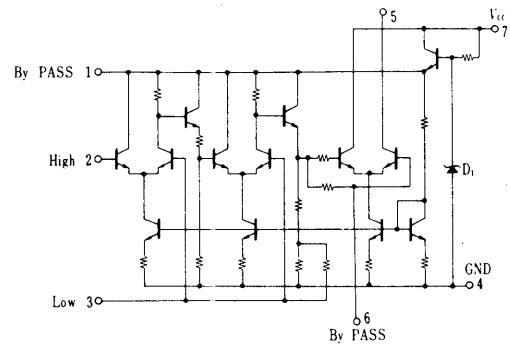

ECG1083 Fig. 342

Mod-Hybrid, dual hi-gain audio pre-amp.

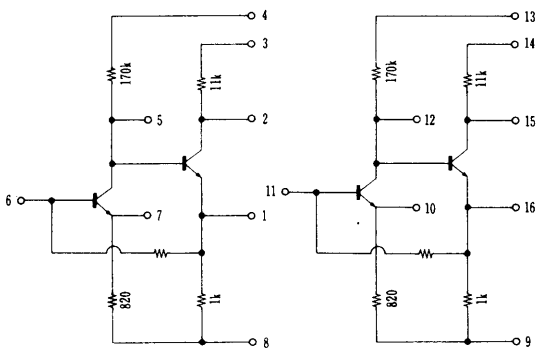

ECG1084 Fig. 335

Vid output, ARC, brightness lim, DC contrast cntrl.

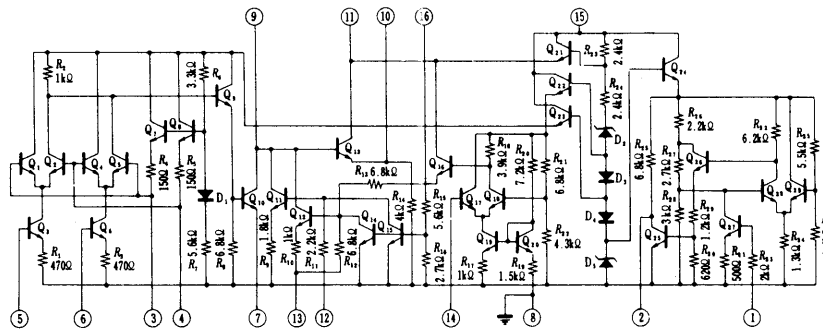

ECG1085 Fig. 269

Lo-noise audio pre-amp.

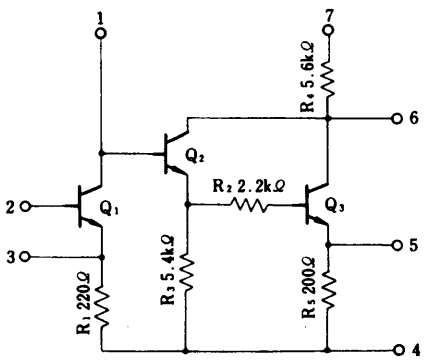

ECG1086 Fig. 335

TV sync sep/hor osc/AFC.

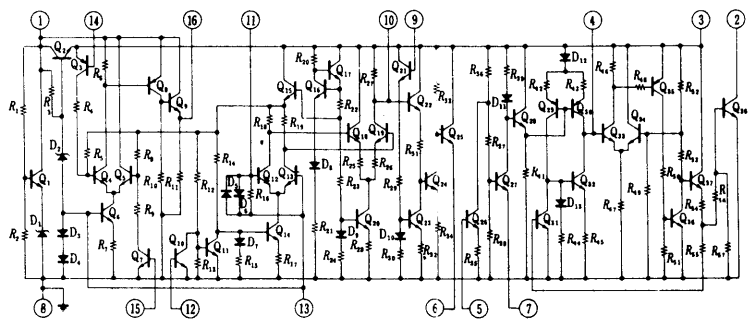

Linear IC and Module Circuits (cont'd)

ECG1087 Fig. 269

Mod-Gen purp lo-noise/hi-gain audio pre-amp.

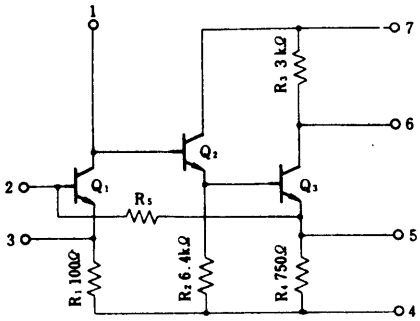

ECG1089 Fig. 347

Chroma sig processor.

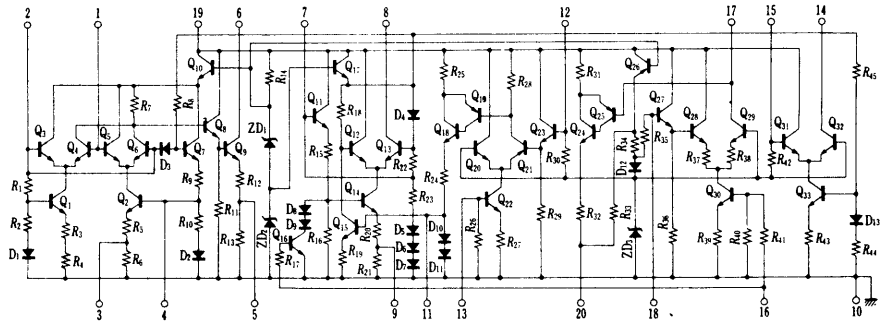

ECG1090 Fig. 305

Mod-Hybrid, 25 W audio amp.

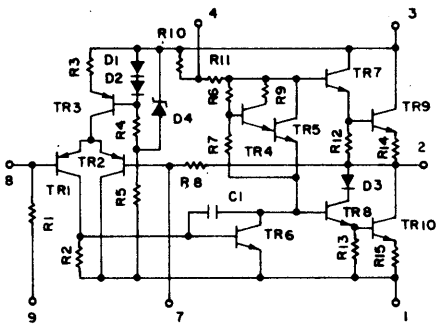

ECG1091 Fig. 335

1st vid amp/inv, AGC gate/amp, color take-off.

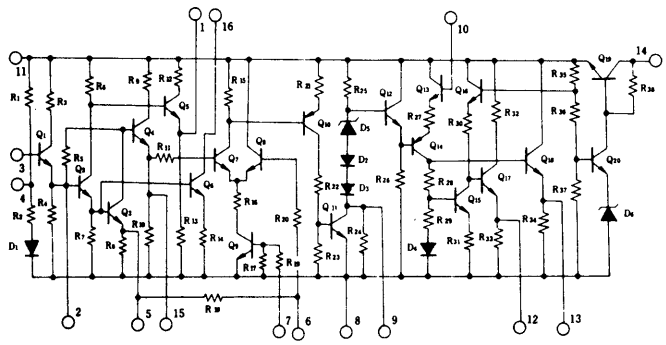

ECG1092 Fig. 270

Mod-RF/IF amp to 150 MHz.

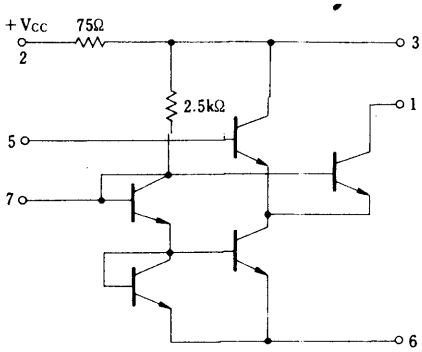

ECG1093 Fig. 327

Audio pre-amp/1 W pwr output.

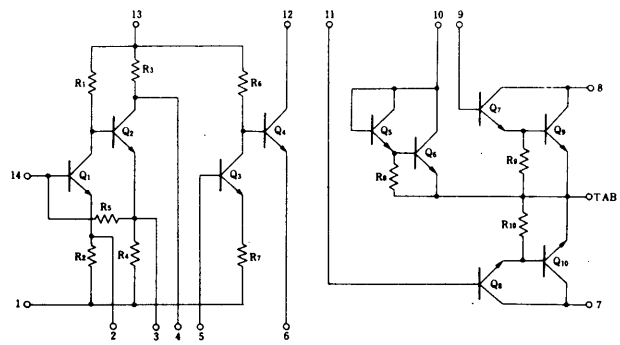

ECG1094 Fig. 314

TV chroma amp.

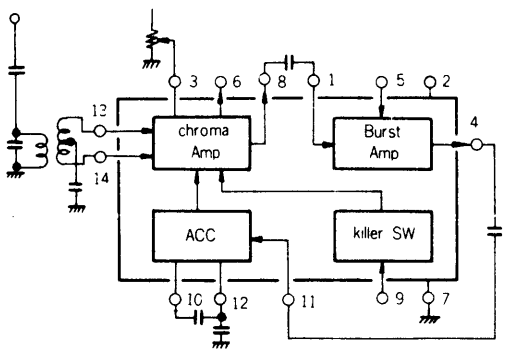

ECG1095 Fig. 324

Audio pre-amp/dr/1 W pwr output.

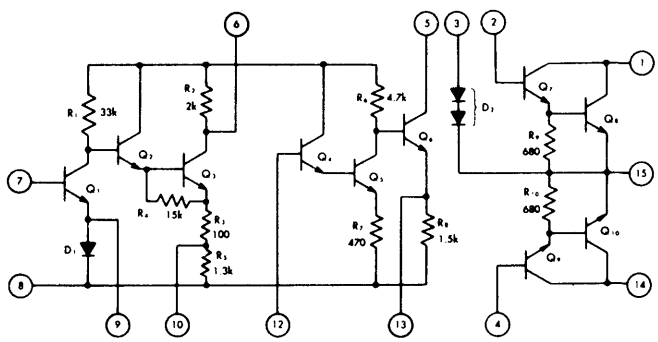

Linear IC and Module Circuits (cont'd)

ECG1096 Fig. 324

TV AFT.

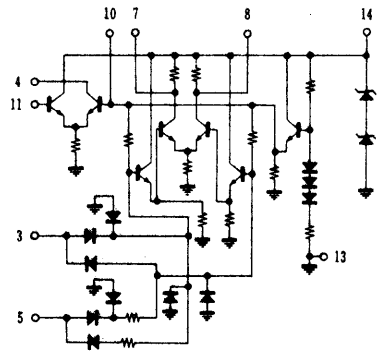

ECG1097 Fig. 324

1 W audio amp plus 2 transistors.

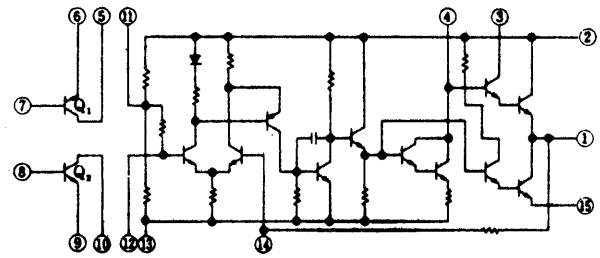

ECG1098 Fig. 257

5 W audio amp.

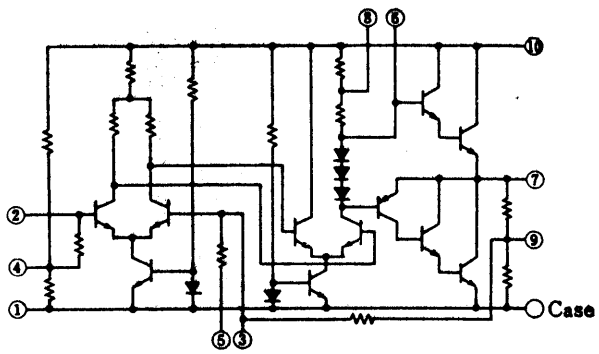

ECG1099 Fig. 314

Chroma demod.

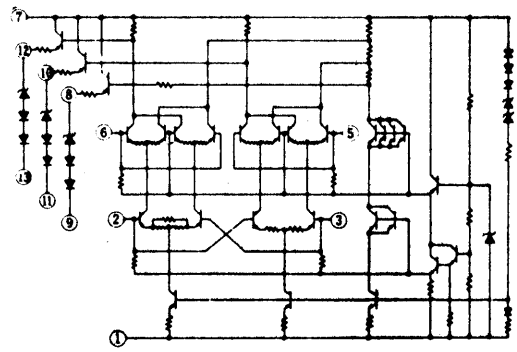

ECG1100 Fig. 269

Mod-FM IF Amp

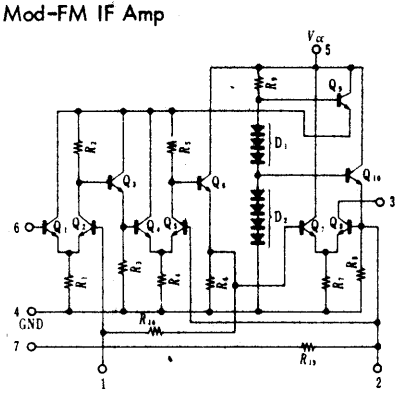

ECG1101 Fig. 269

Mod-Gen purp amp, DC to 100 MHz

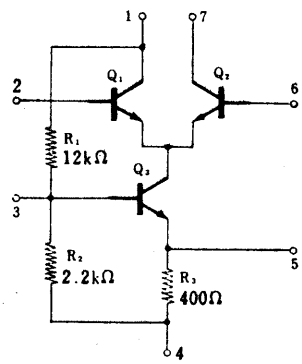

ECG1102 Fig. 264

Mod-3 stage audio amp/dr.

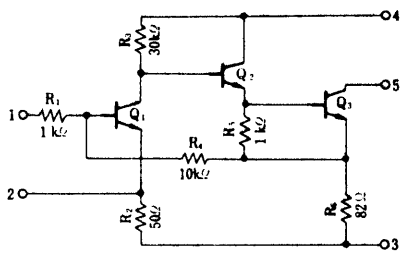

ECG1103 Fig. 269

Mod-Gen purp audio pre-amp/voltage amp.

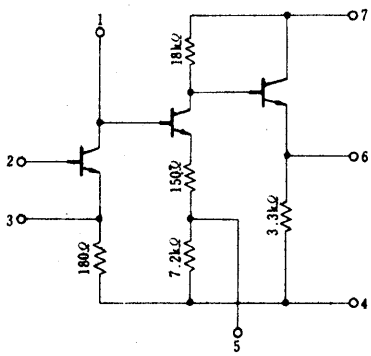

ECG1104 Fig. 264

Mod-Hi-freq amp to 100 MHz.

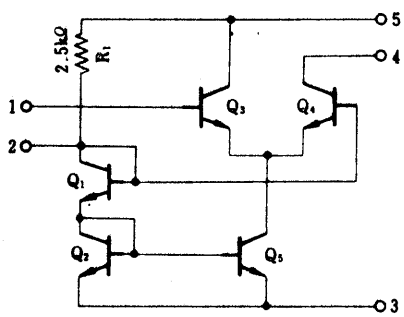

Linear IC and Module Circuits (cont'd)

ECG1105 Fig. 335

Subcarrier regen/APC/killer/bst Amp/det

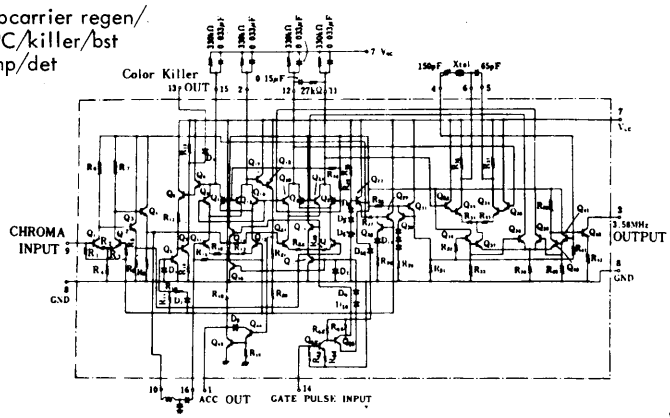

ECG1106 Fig. 335

FM stereo demod.

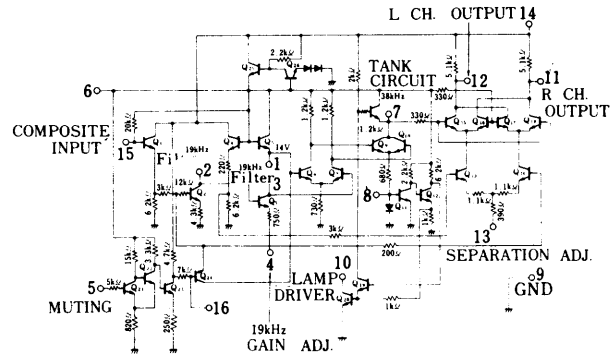

ECG1108 Fig. 314

AM/FM IF amp/det/AF amp.

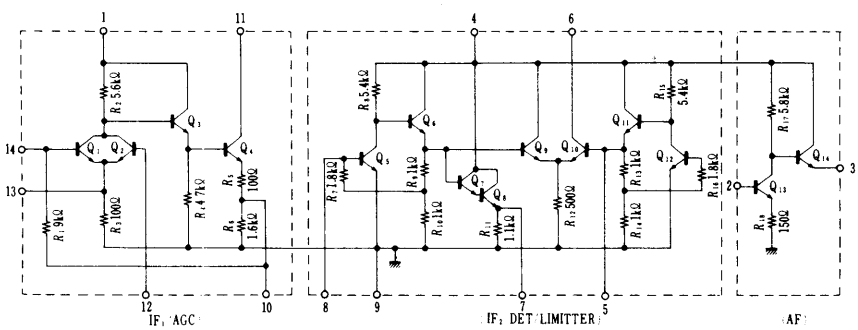

ECG1109 Fig. 315

Lo-level vid det.

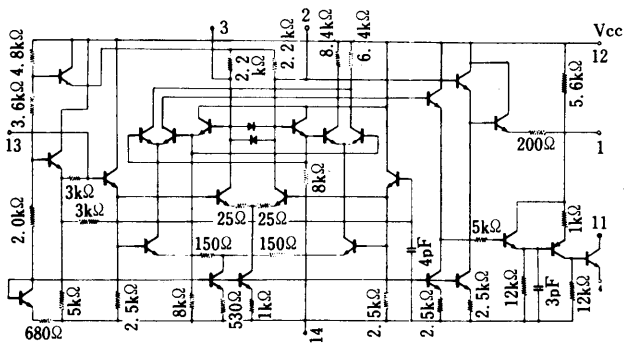

ECG1110 Fig. 339

Audio pre-amp/tone amp/2 W pwr output.

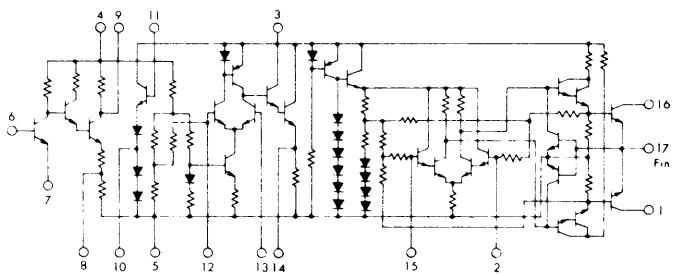

ECG1111 Fig. 331

4 W audio amp.

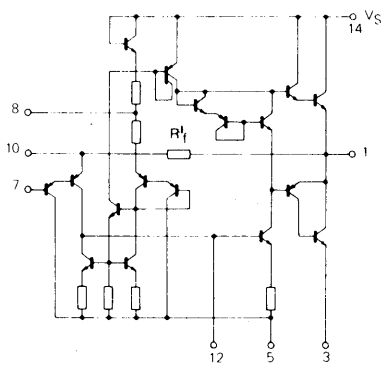

ECG1112 Fig. 314

2.2 W audio amp.

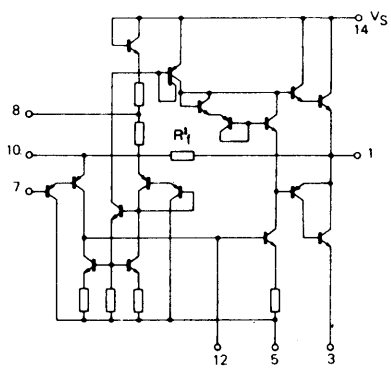

ECG1113 Fig. 318

2.1 W audio amp.

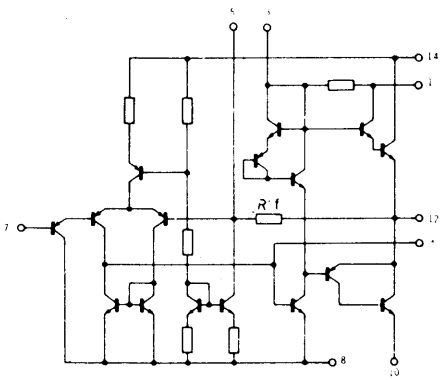

Linear IC and Module Circuits (cont'd)

ECG1114 Fig. 331

4.5 W audio amp.

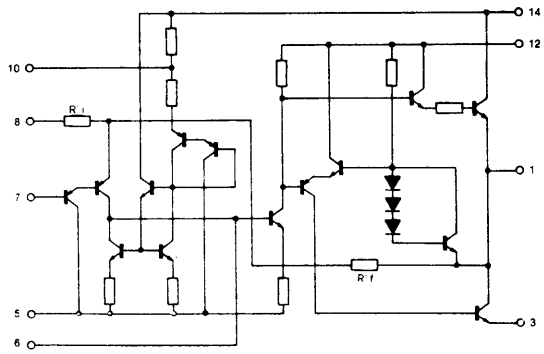

ECG1115 Fig. 310
ECG1115A Fig. 311

7 W audio amp.

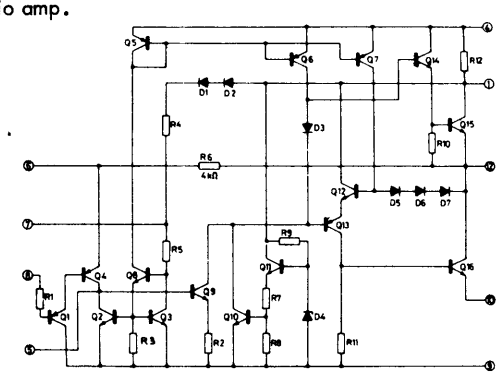

ECG1116 Fig. 311

5 W audio amp.

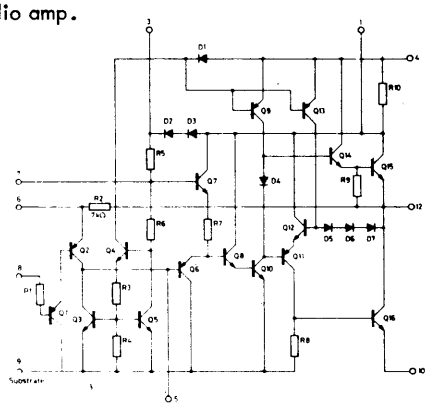

ECG1117 Fig. 317

2 W audio amp.

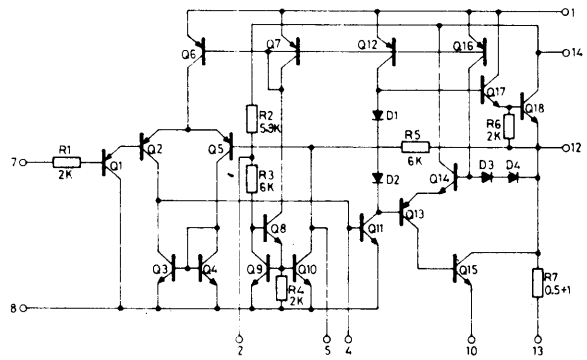

ECG1118 Fig. 331

3.3 W audio amp.

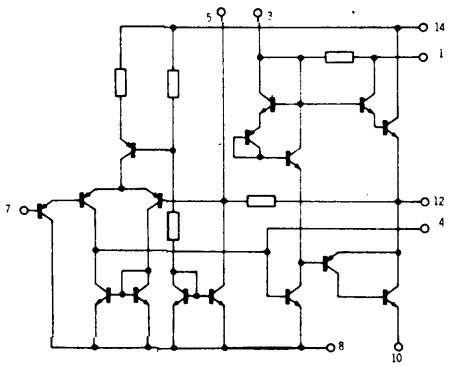

ECG1119 Fig. 271

Mod-Hybrid, 2 stage audio amp/dr.

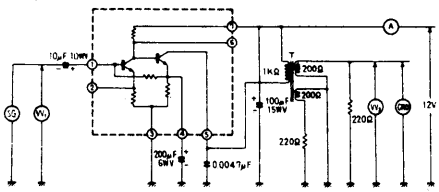

ECG1120 Fig. 271

Mod-Hybrid, audio dr.

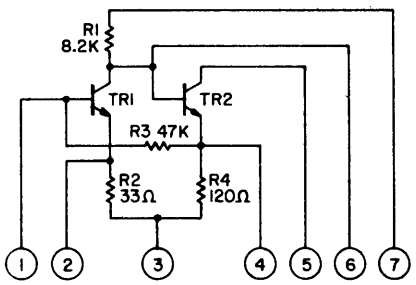

ECG1121 Fig. 336

Chroma sync system.

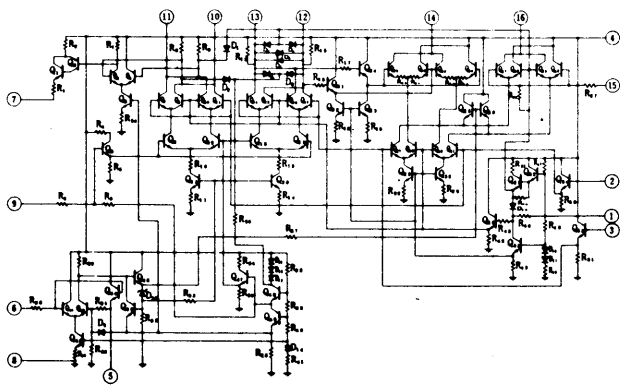

ECG1122 Fig. 314

Chroma demod.

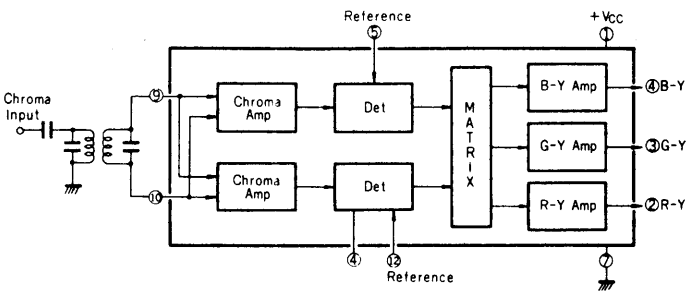

Linear IC and Module Circuits (cont'd)

ECG1123 Fig. 336

TV reference combination.

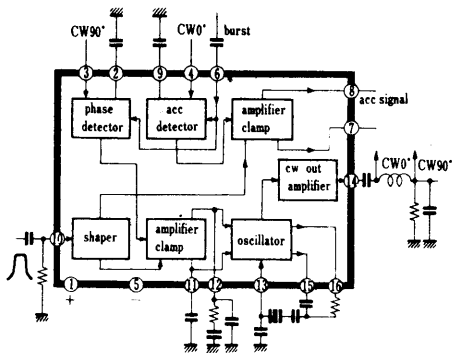

ECG1124 Fig. 335

AM/FM IF amp.

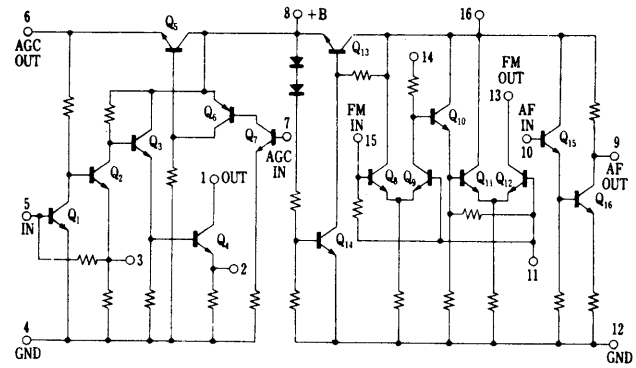

ECG1126 Fig. 324

1 W audio amp.

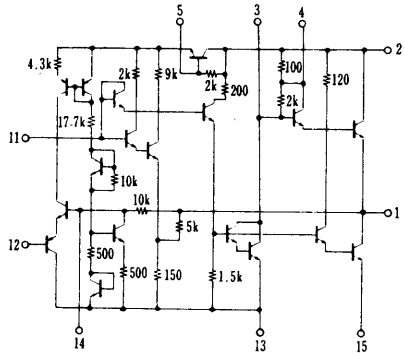

ECG1127 Fig. 300

4.5 W audio amp.

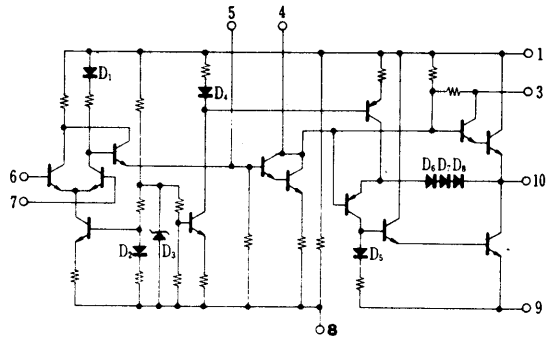

ECG1128 Fig. 269

TV vid IF.

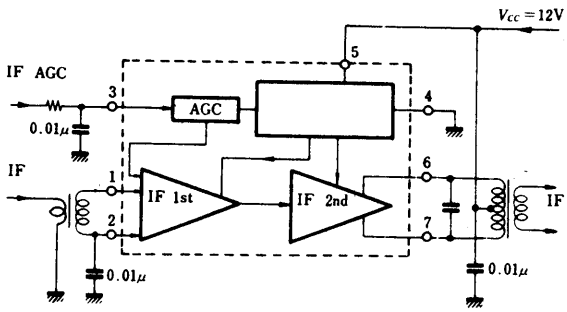

ECG1129 Fig. 329

Vert defl system.

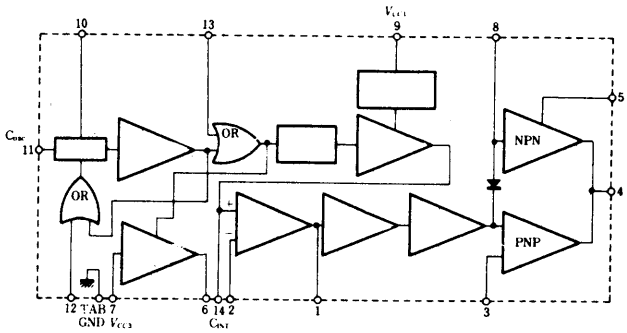

ECG1130 Fig. 335

Chroma demod/matrix hue cntrl.

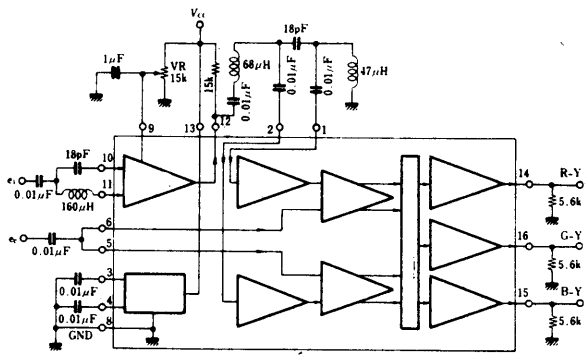

ECG1131 Fig. 335

Chroma/sig amp/processor.

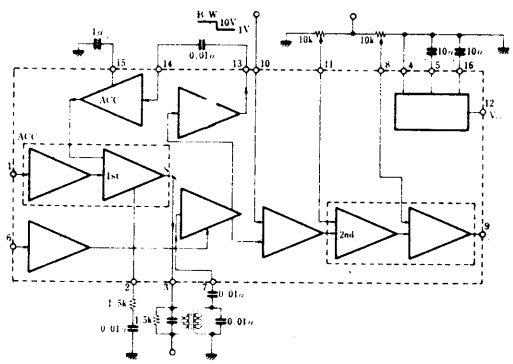

Linear IC and Module Circuits (cont'd)

ECG1132 Fig. 335

Chroma subcarrier regen.

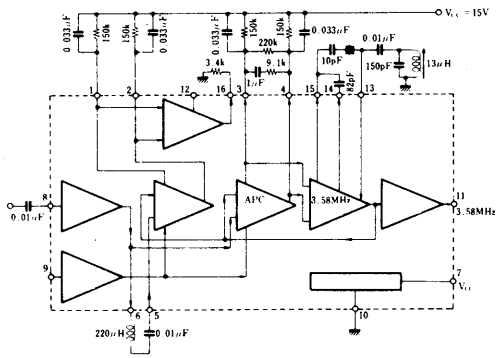

ECG1133 Fig. 335

TV sound IF/det.

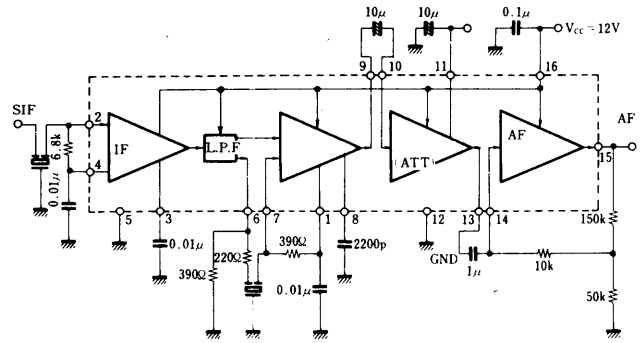

ECG1134 Fig. 335

TV vid processor.

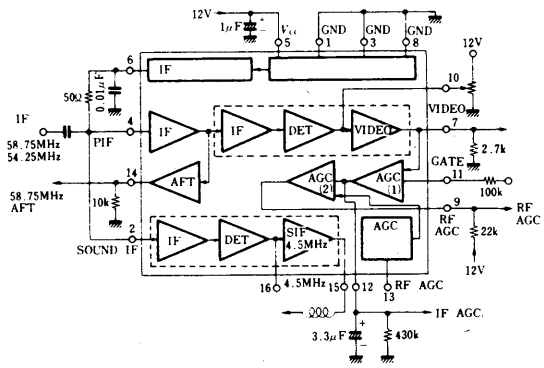

ECG1135 Fig. 268

Hi-gain audio pre-amp.

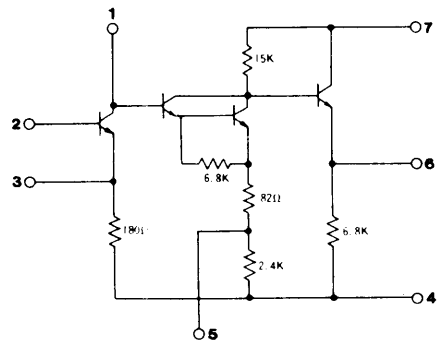

ECG1136 Fig. 314

Battery protect ckt.

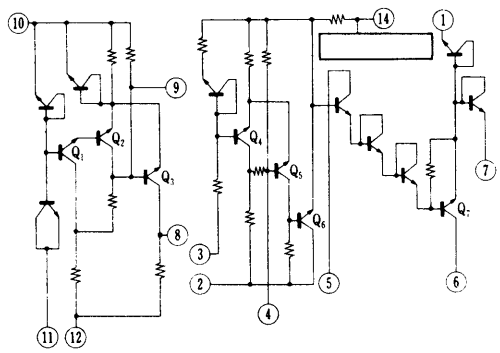

ECG1137 Fig. 252

1.3 W audio amp.

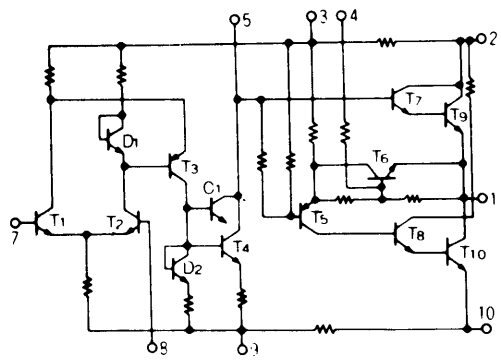

ECG1139 Fig. 304

Mod-Audio 13 W min pwr amp.

ECG1274

Mod-Audio 15 W min pwr amp.

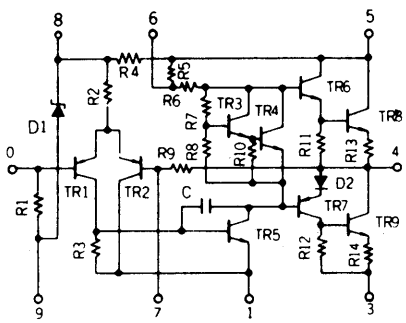

ECG1140 Fig. 283

2.0 W audio amp.

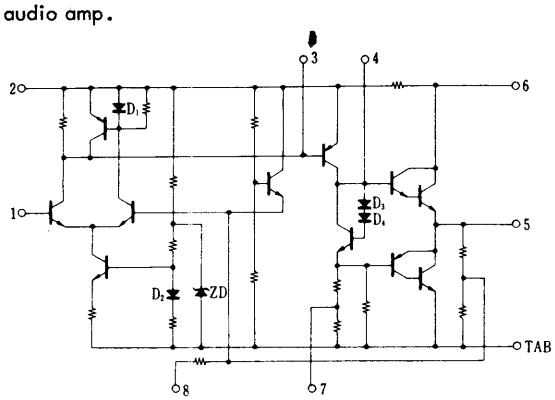

ECG1141 Fig. 283

AF PO, 1.5 W.

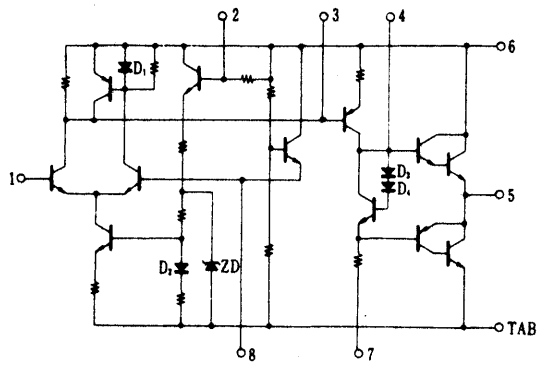

ECG1142 Fig. 314

FM multiplex stereo demodulator.

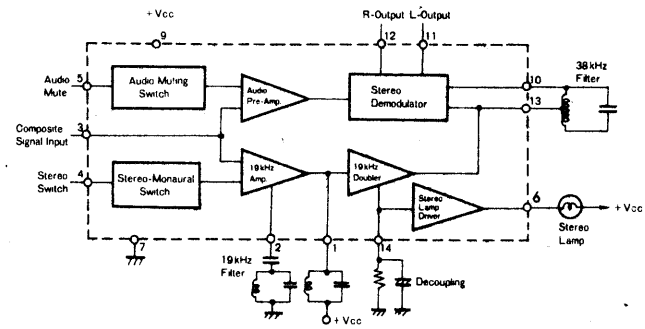

ECG1148 Fig. 305

Mod-AF PO, 50 W.

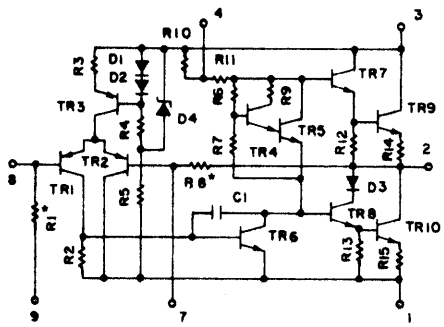

ECG1149 Fig. 315

FM tuning system and indicator.

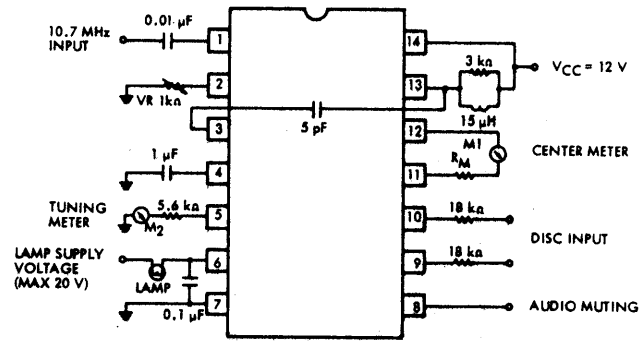

ECG1150 Fig. 282

AF PO, 2.5 W.

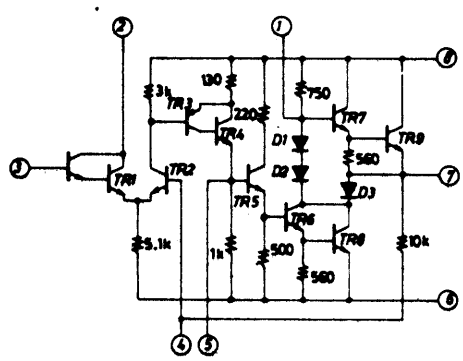

ECG1152 Fig. 313

Mod-AF pre-amp, high gain.

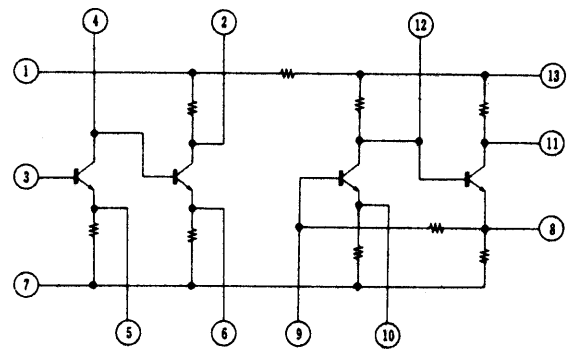

ECG1153 Fig. 298

AF PO, 4.2 W.

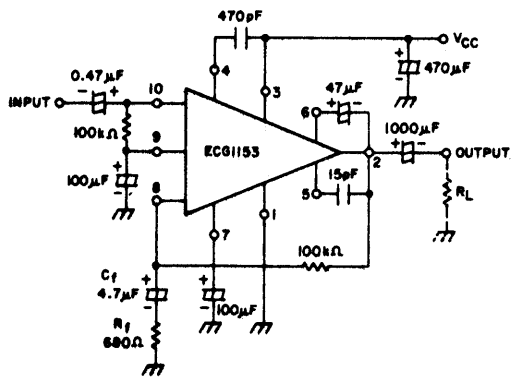

ECG1154 Fig. 320

AF PO, 2-channel, 2 W/channel.

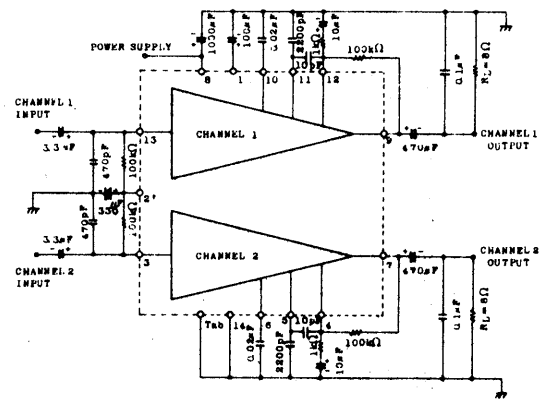

ECG1155 Fig. 298

AF PO, 5.8 W.

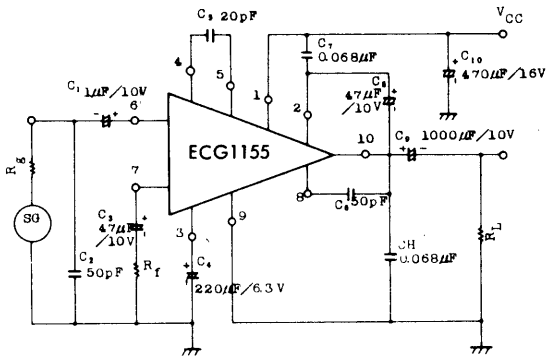

ECG1156 Fig. 340

AF PO, 2 W.

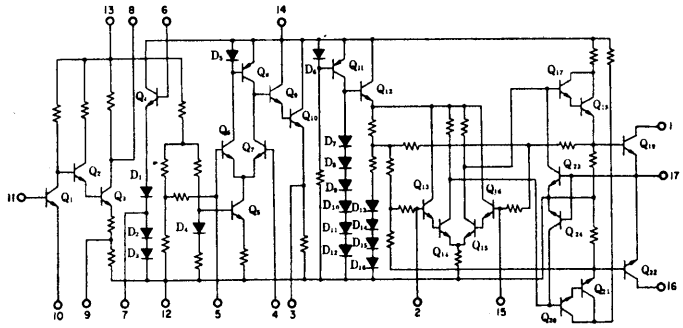

ECG1158 Fig. 336

Chroma processor.

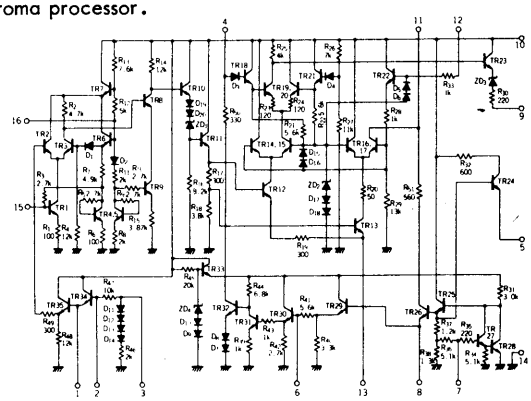

ECG1159 Fig. 336

Color demodulator.

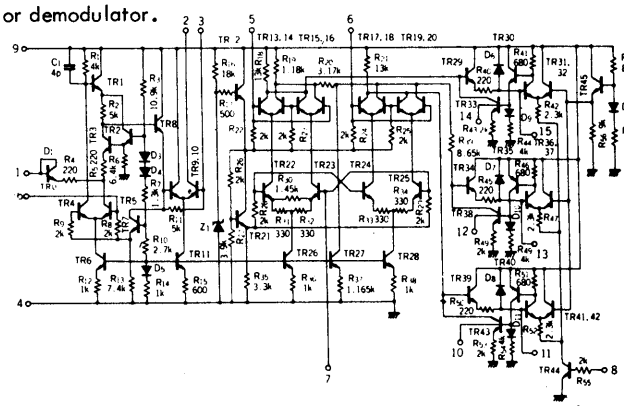

ECG1160 Fig. 300

AF PO, 5.2 W.

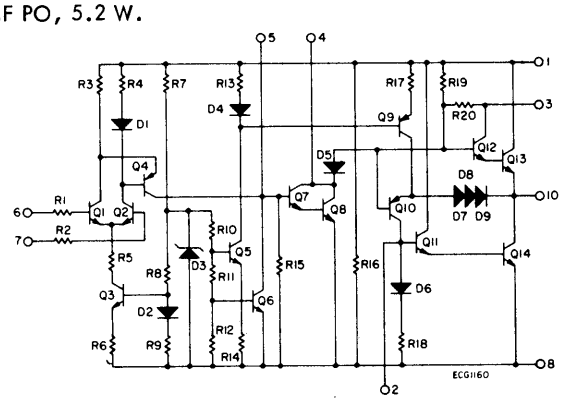

ECG1161 Fig. 351

Video and sound IF combination.

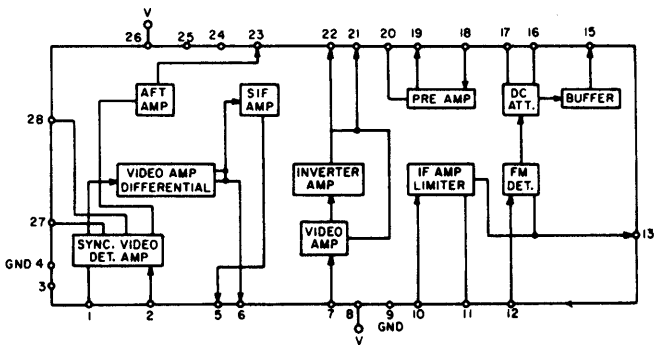

ECG1162 Fig. 314

IF, detector and audio pre-amp.

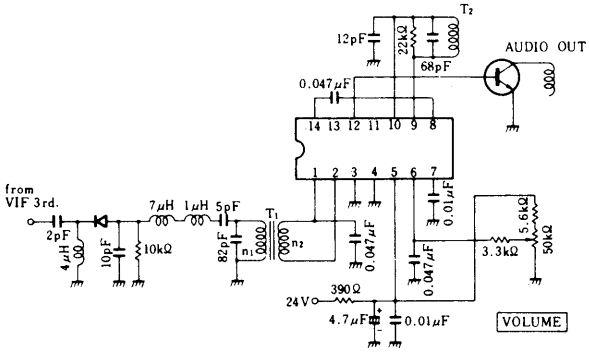

ECG1163 Fig. 336

TV color demodulator.

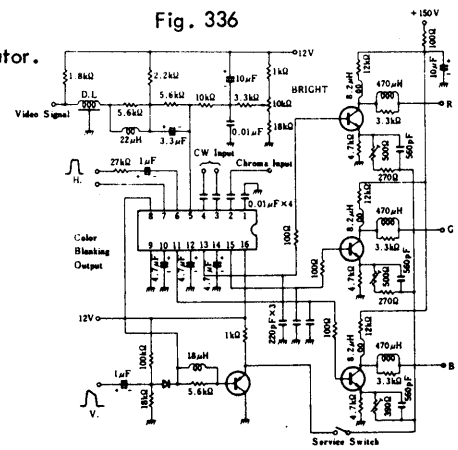

ECG1164 Fig. 336

TV video sig processing circuit.

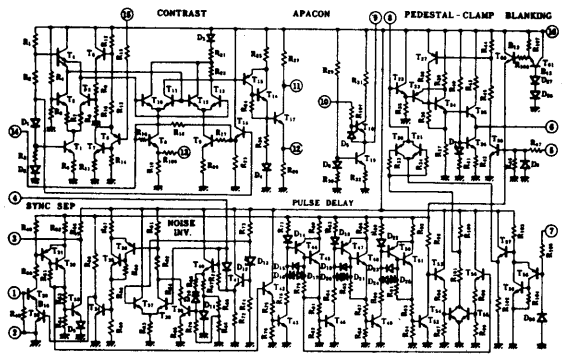

ECG1165 Fig. 298

Modulator/audio output, stereo and CB.

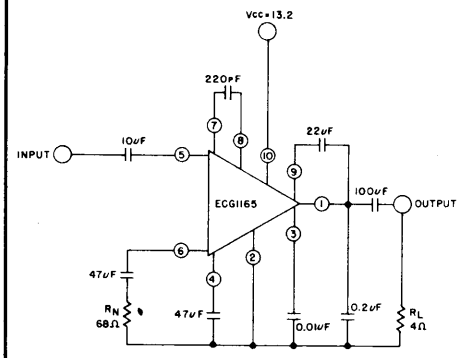

ECG1166 Fig. 298

Modulator/audio output, stereo and CB.

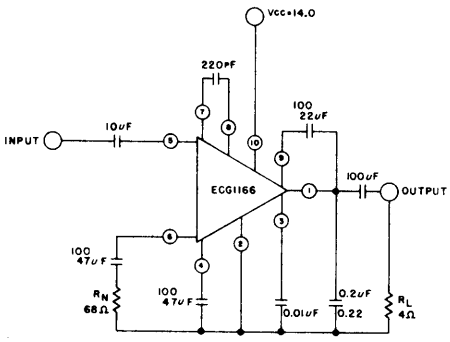

ECG1167 Fig. 336

CMOS PLL (frequency synthesizer).

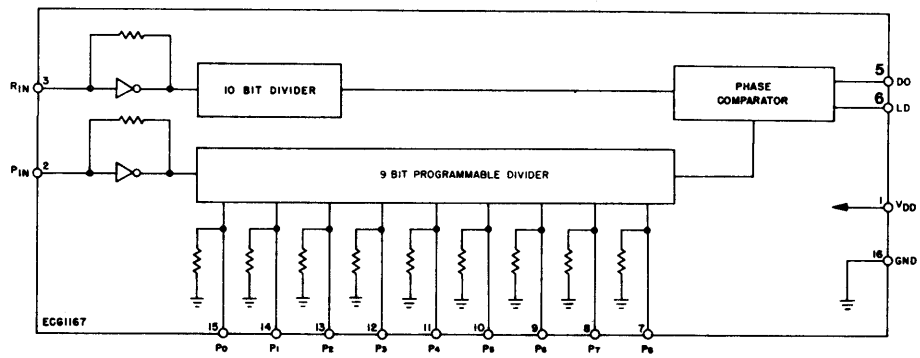

ECG1168 Fig. 336

Video processor.

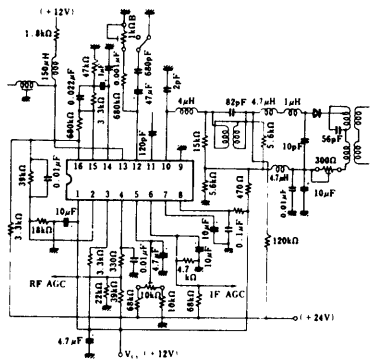

ECG1169 Fig. 303

Audio output/modulator.

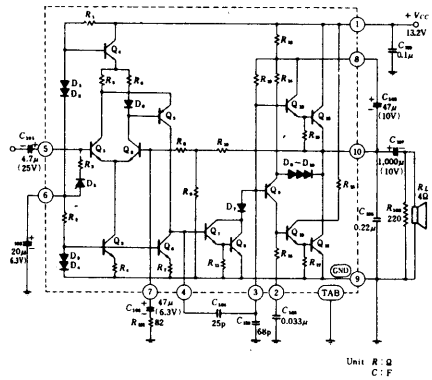

ECG1170 Fig. 284

Audio pre-amp.

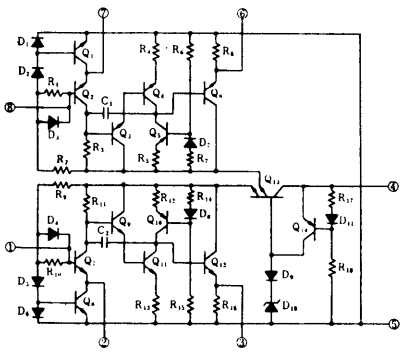

ECG1171 Fig. 249

Microphone amp.

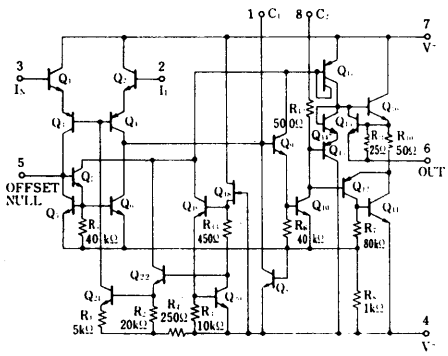

ECG1172 Fig. 314

Phase frequency detector for PLL.

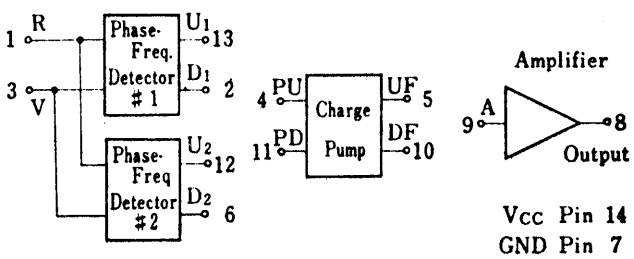

ECG1173 Fig. 335

TV video IF amp and AGC.

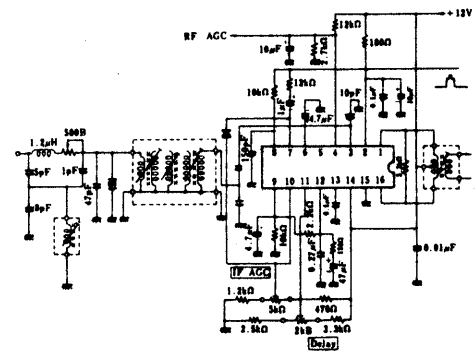

ECG1174 Fig. 317

TV automatic fine tuning.

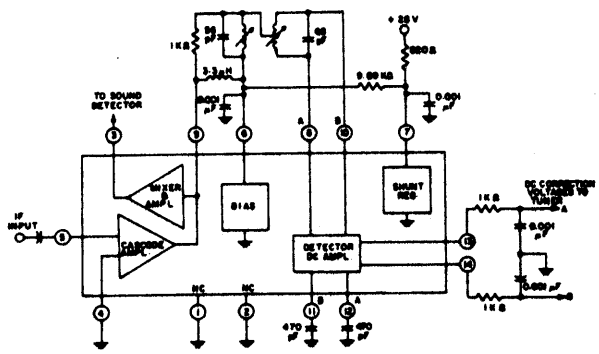

ECG1175 Fig. 337

TV sound IF and AF output subsystem.

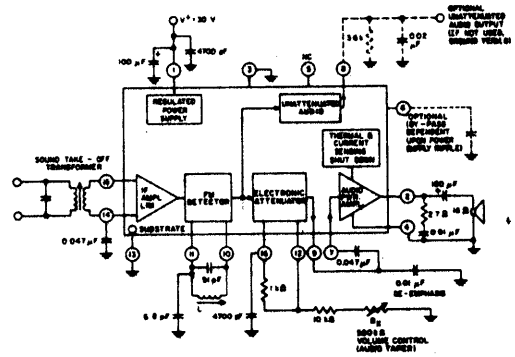

ECG1176 Fig. 336

TV chroma demodulator.

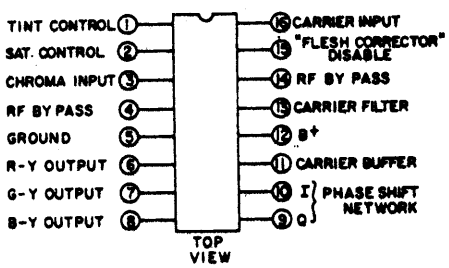

ECG1177 Fig. 314

TV luminance processor.

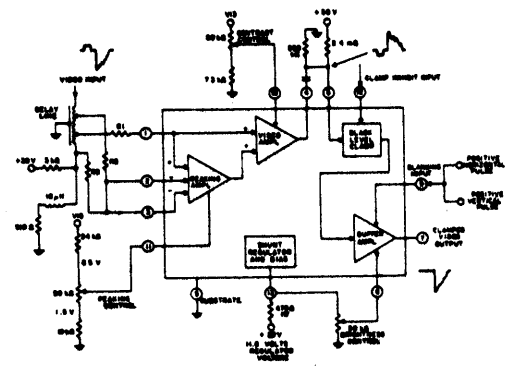

ECG1178 Fig. 314

Chroma demodulator.

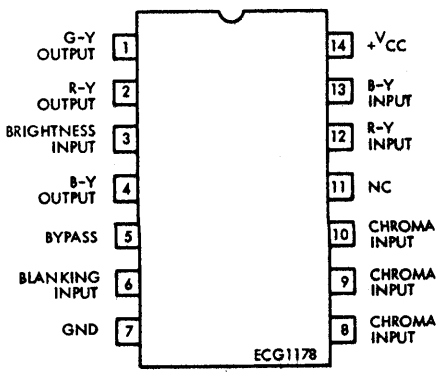

ECG1179 Fig. 276

Audio pre-amp.

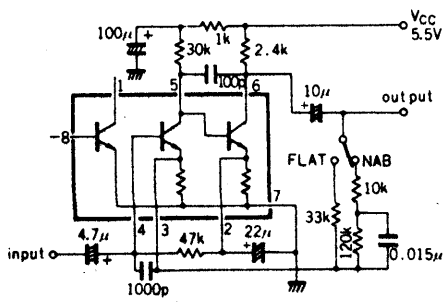

ECG1180 Fig. 326

Audio Power Output, 1.5 W.

ECG1228

AF power amp, 2.1 W.

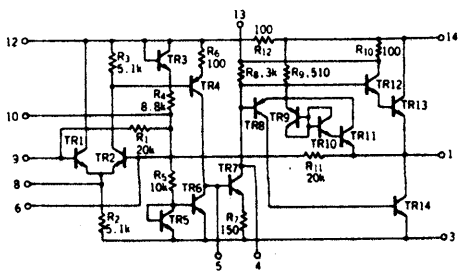

Linear IC and Module Circuits (cont'd)

ECG1181 Fig. 336

MPX decoder.

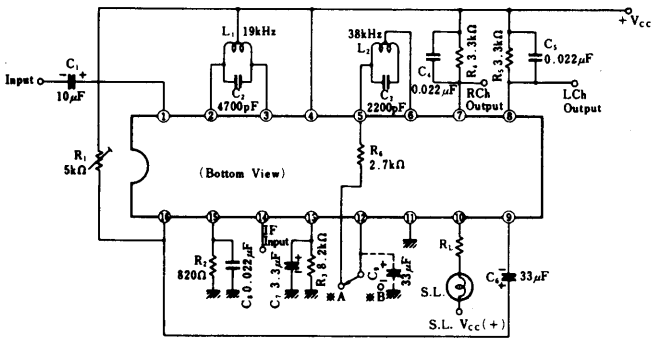

ECG1182 Fig. 336

Chrominance sig processor.

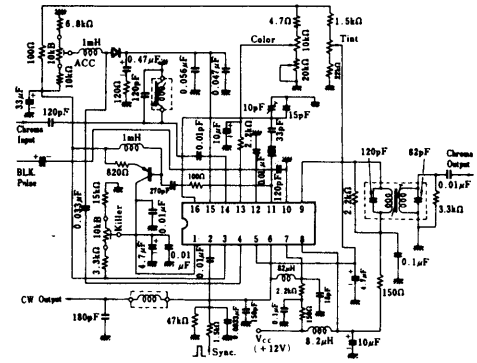

ECG1183 Fig. 314

Chroma demodulator.

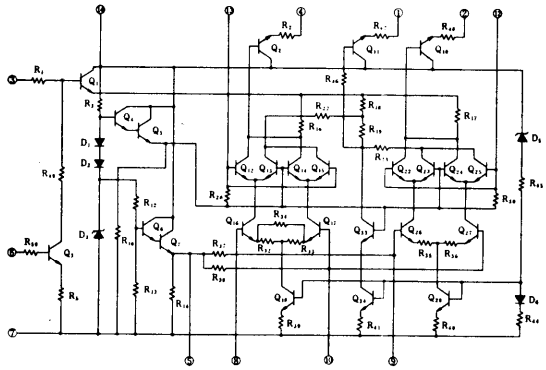

ECG1184 Fig. 336

Audio pre-amp.

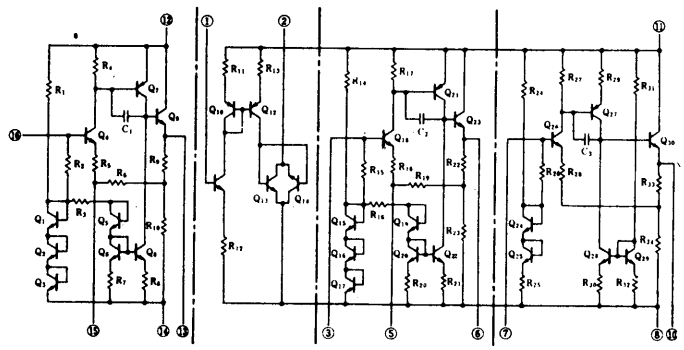

ECG1185 Fig. 300

Audio pre-amp.

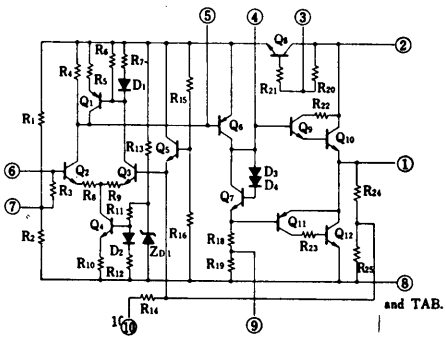

ECG1186 Fig. 314

Vid IF and AGC.

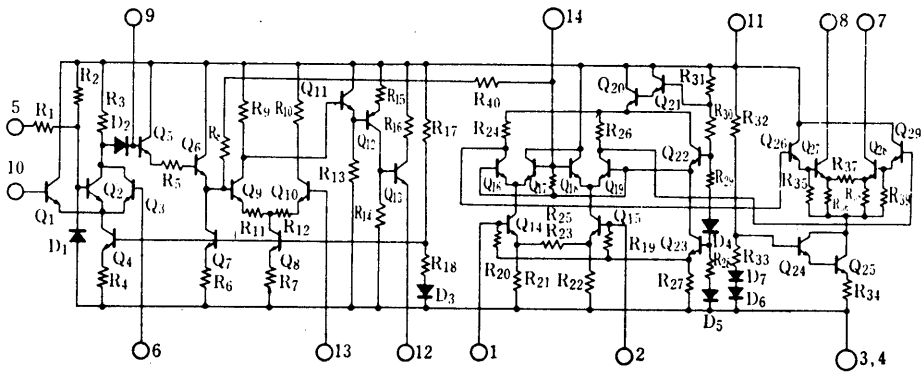

ECG1187 Fig. 276

Vid det/amp.

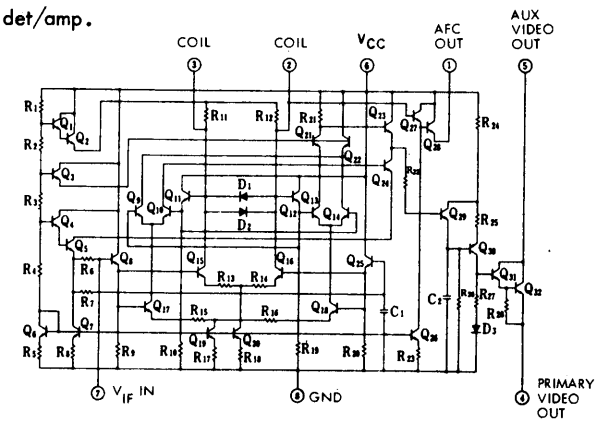

ECG1188 Fig. 254

Noise amp.

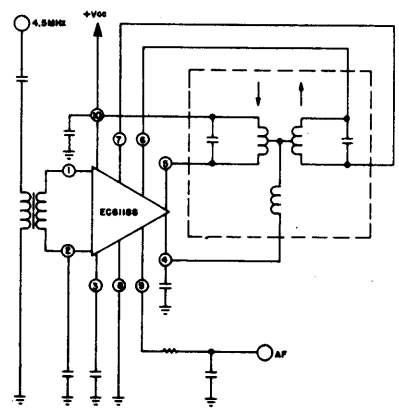

ECG1191 Fig. 349

Chrominance sig processor.

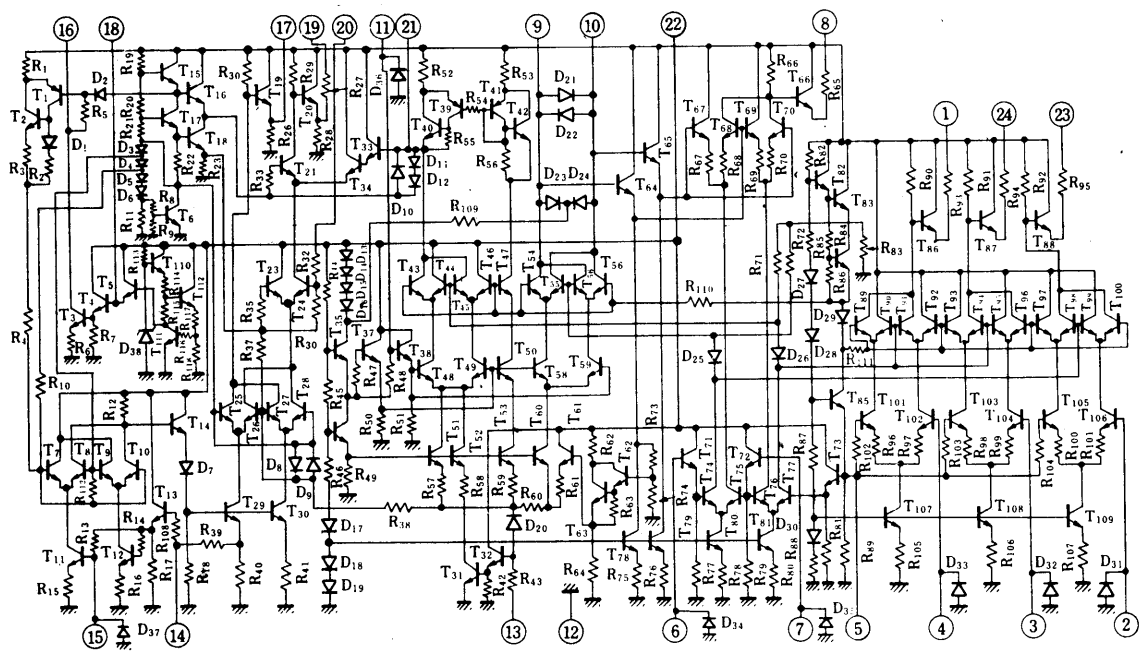

ECG1192 Fig. 292

Voltage controlled oscillator and mixer, CB.

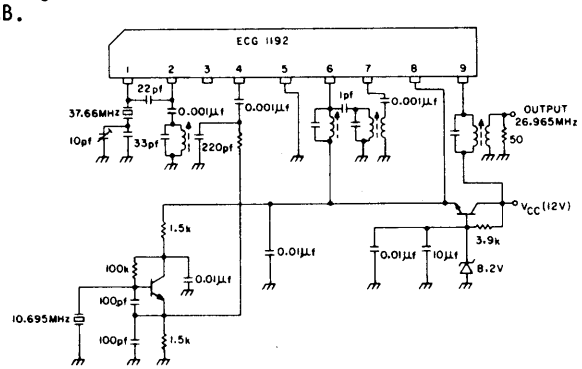

ECG1193 Fig. 312

4.5 W audio output.

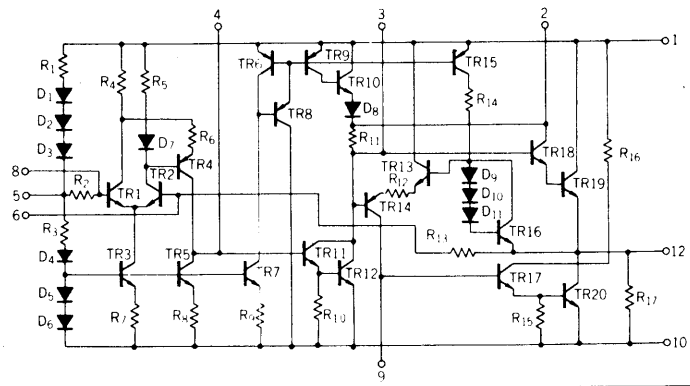

ECG1194 Fig. 297

5.8 W audio output, CB.

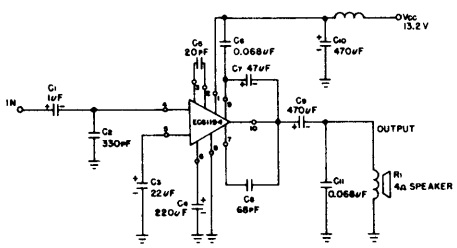

ECG1195 Fig. 270

Lo-noise audio pre-amp.

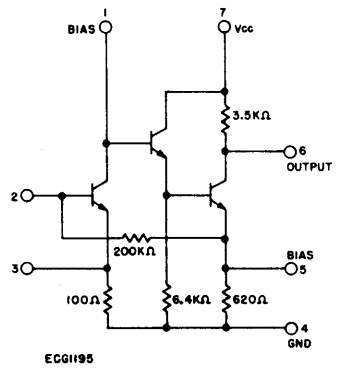

ECG1196 Fig. 349

Chroma processor and demodulator.

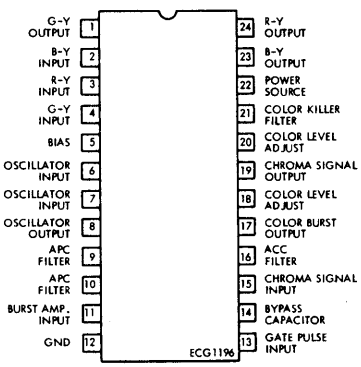

Linear IC and Module Circuits (cont'd)

ECG1197 Fig. 292

Freq divider and amp.

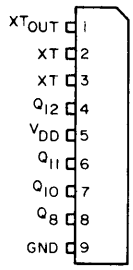

ECG1200 Fig. 335

TV chroma processor.

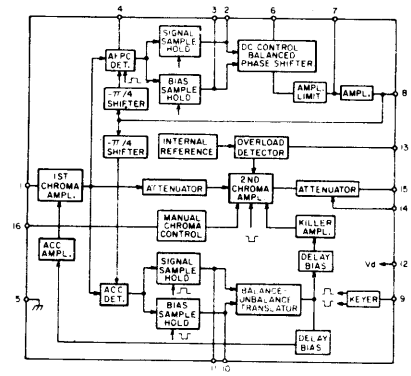

ECG1201

ECG1204

Fig. 307

CB voltage controlled oscillator.

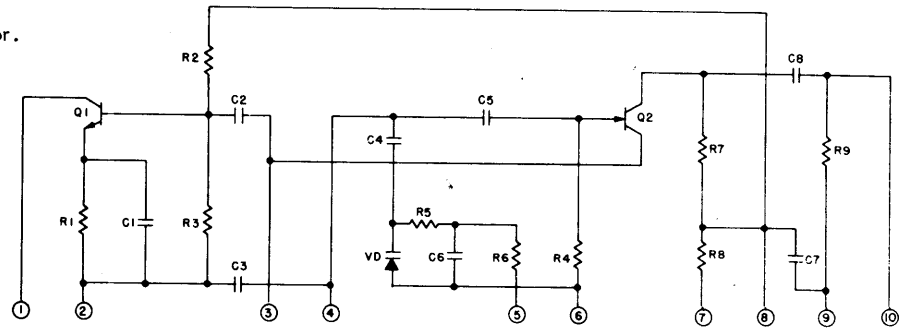

ECG1202 Fig. 307

CB voltage controlled oscillator.

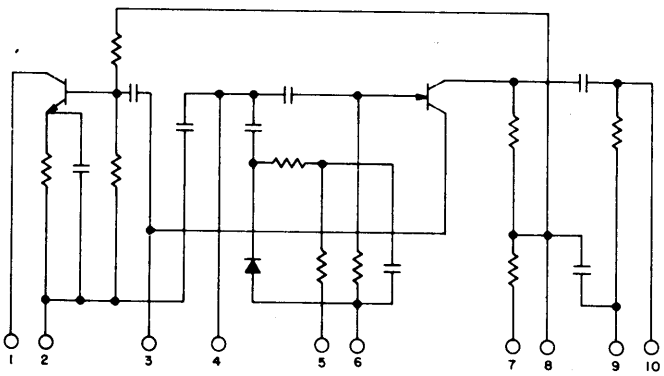

ECG1203 Fig. 307

CB voltage controlled oscillator.

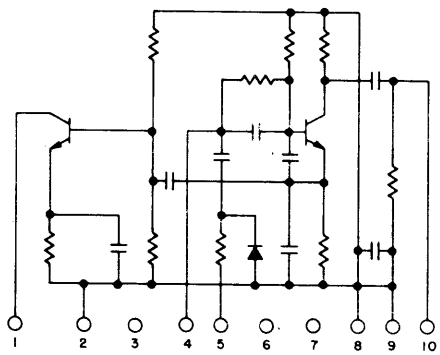

ECG1205 Fig. 335

Tape recorder pre-amp.

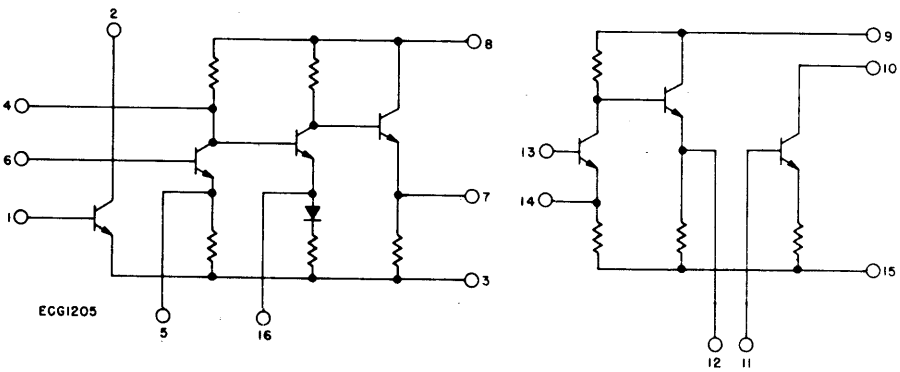

ECG1206 Fig. 315

PLL stereo decoder.

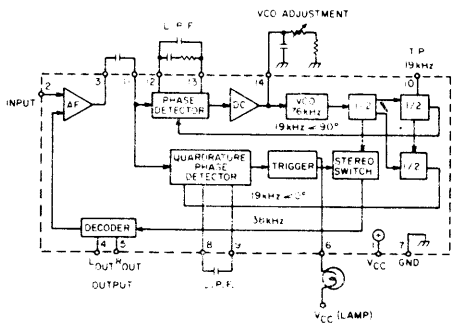

Linear IC and Module Circuits (cont'd)

ECG1207 Fig. 335

CMOS programmable divider.

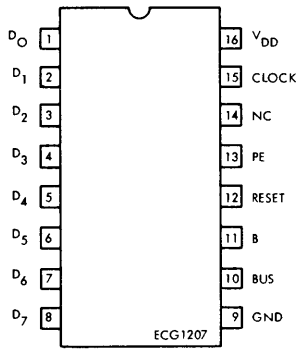

ECG1208 Fig. 292

CMOS phase comparator.

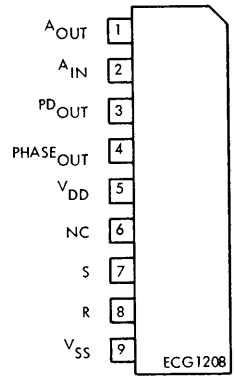

ECG1209 Fig. 276

4-bit binary counter.

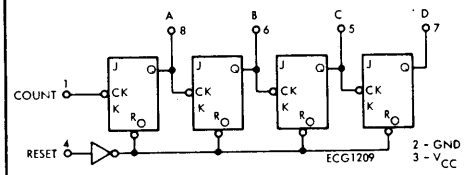

ECG1210 Fig. 293

Audio pre-amp.

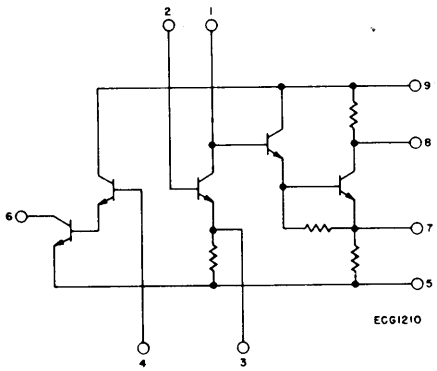

ECG1211 Fig. 296

5.5 W audio out auto and CB.

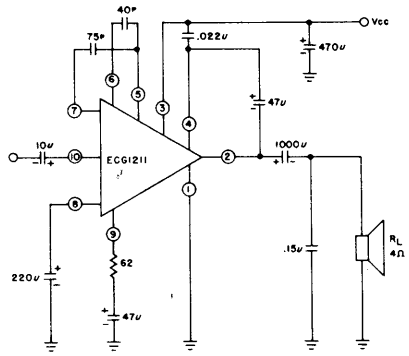

ECG1212 Fig. 341

2-channel AF power amp, 9.5 W/channel.

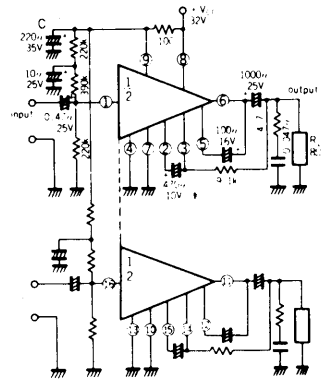

ECG1213 Fig. 315

TV Video IF Amp

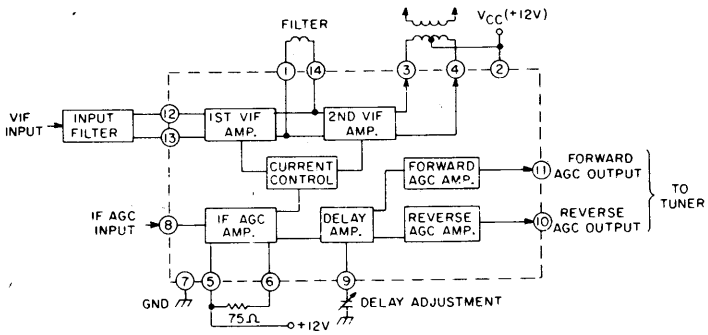

ECG1214 Fig. 336

AM tuner, RF conv, IF, Det, AGC.

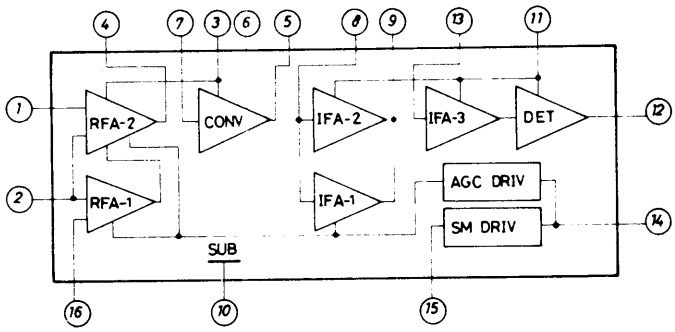

ECG1215 Fig. 336

Stereo equalizer amp.

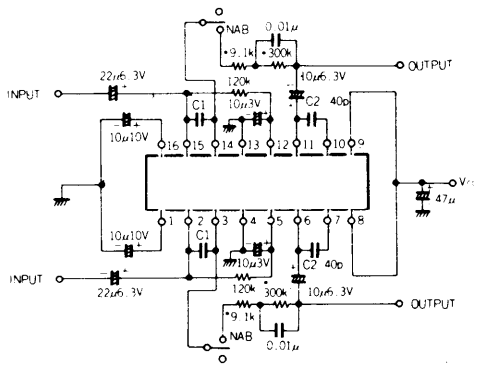

ECG1216 Fig. 336

Chroma demodulator.

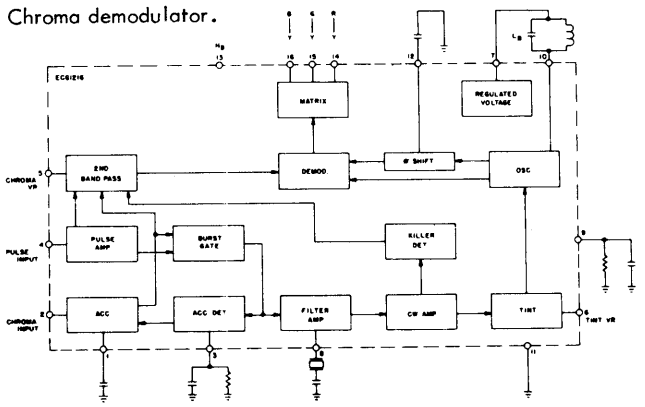

Linear IC and Module Circuits (cont'd)

ECG1217 Fig. 336

PLL FM stereo decoder.

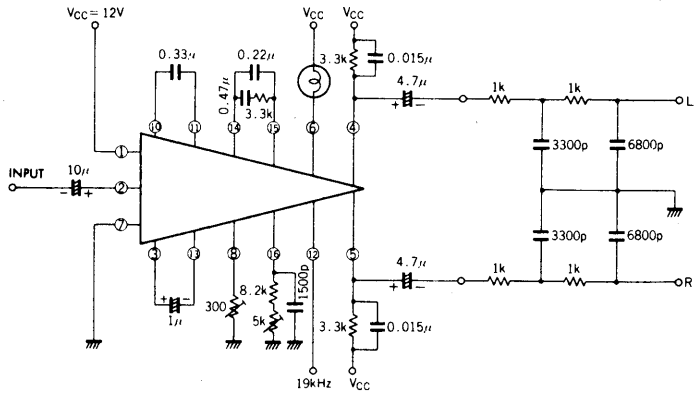

ECG1218 Fig. 332

2-channel AF power amp, 7 W/channel.

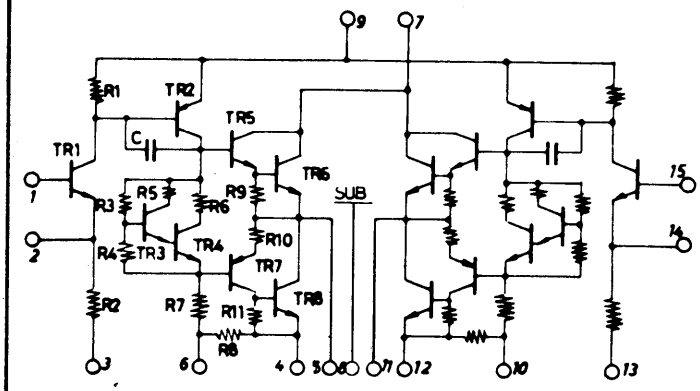

ECG1219 Fig. 334

2-channel AF power amp, 15 W/channel.

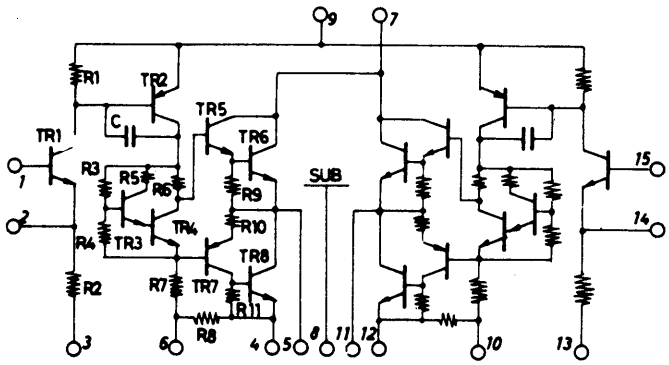

ECG1220 Fig. 333

2-channel AF power amp, 6 W/channel.

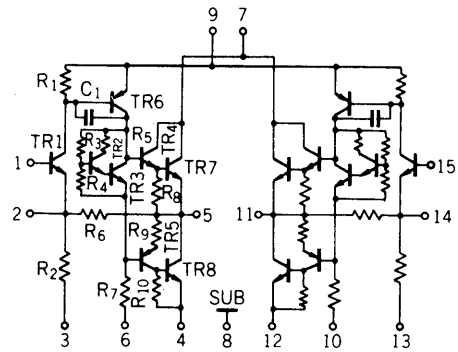

ECG1221 Fig. 314

Stereo pre-amp.

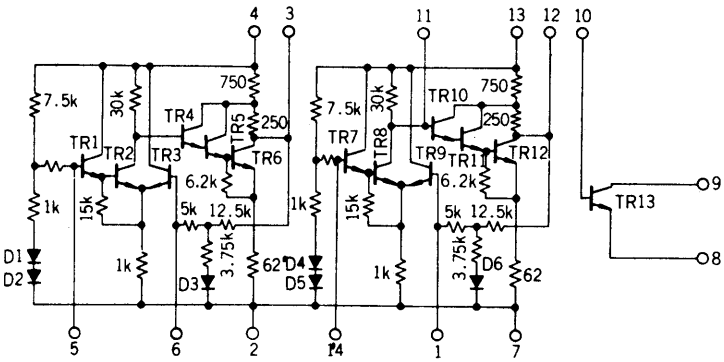

ECG1222 Fig. 320

AF power amp, 4.2 W.

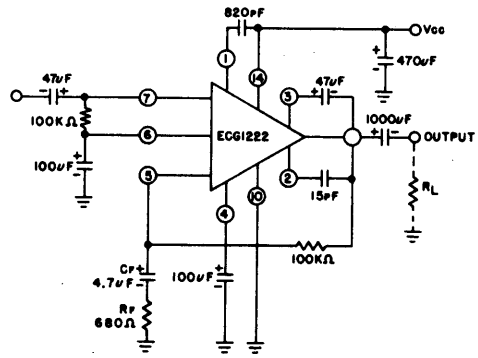

ECG1223 Fig. 272

Lo-noise pre-amp.

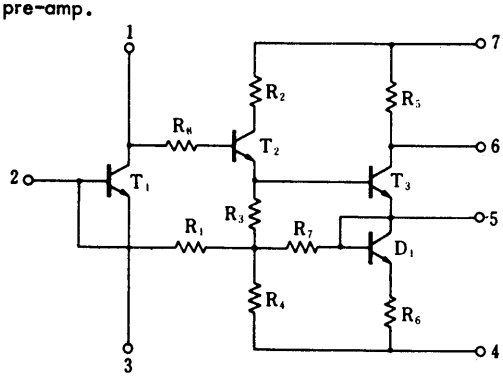

ECG1224 Fig. 336

AF power amp, 1.55 W.

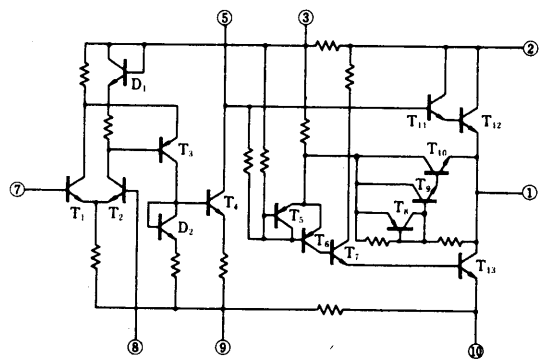

Linear IC and Module Circuits (cont'd)

ECG1225 Fig. 336

FM stereo demodulator.

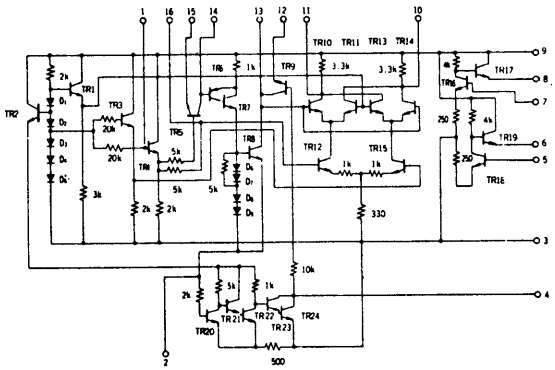

ECG1226 Fig. 314

FM stereo multiplex demodulator.

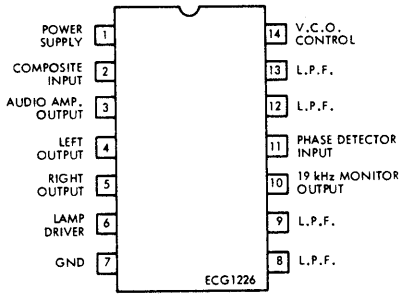

ECG1227 Fig. 276

FM IF amp.

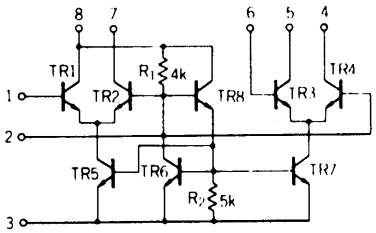

ECG1229 Fig. 314

TV vert defl and pincushion correction.

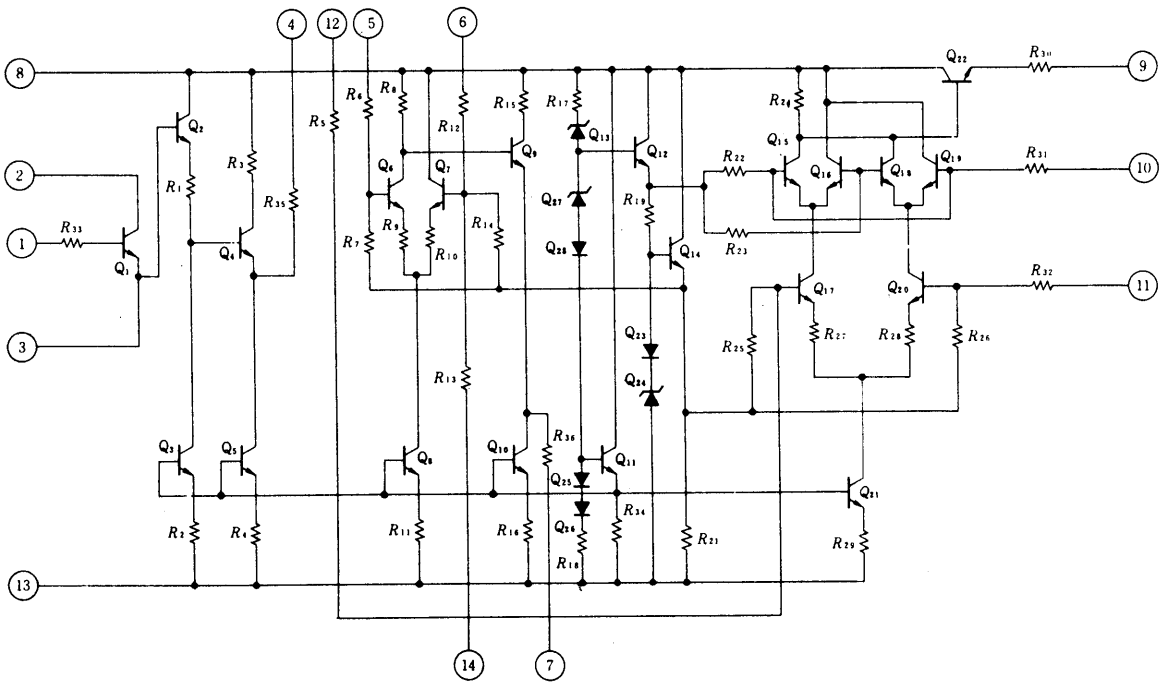

ECG1230 Fig. 336

FM stereo multiplex demodulator.

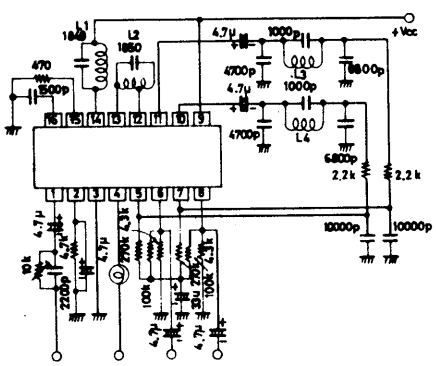

ECG1231 Fig. 311

TV sound IF and audio output.

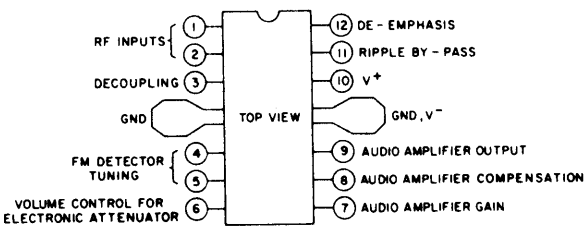

Linear IC and Module Circuits (cont'd)

ECG1232 Fig. 265

AF power amp, 8 W.

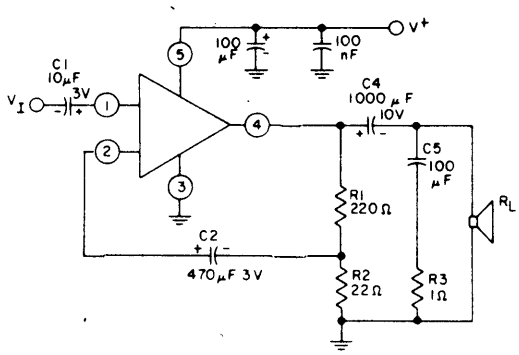

ECG1233 Fig. 336

PLL.

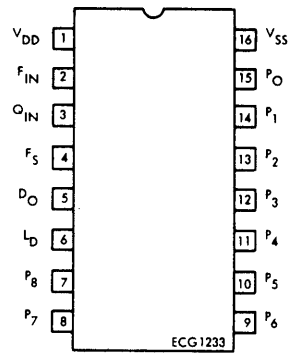

ECG1234 Fig. 269

FM IF and TV Sound IF Amp

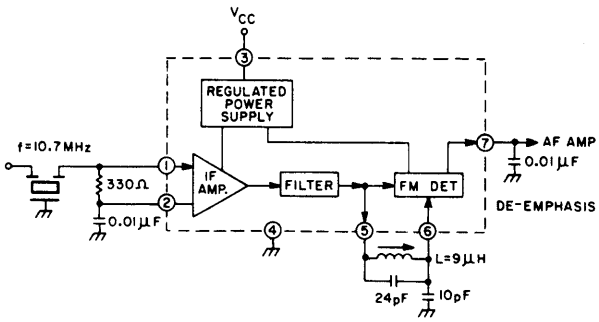

ECG1235 Fig. 269

Squelch Amplifier

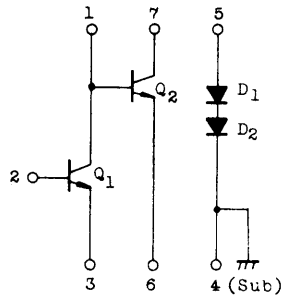

ECG1237 Fig. 315

AM Radio Without Audio

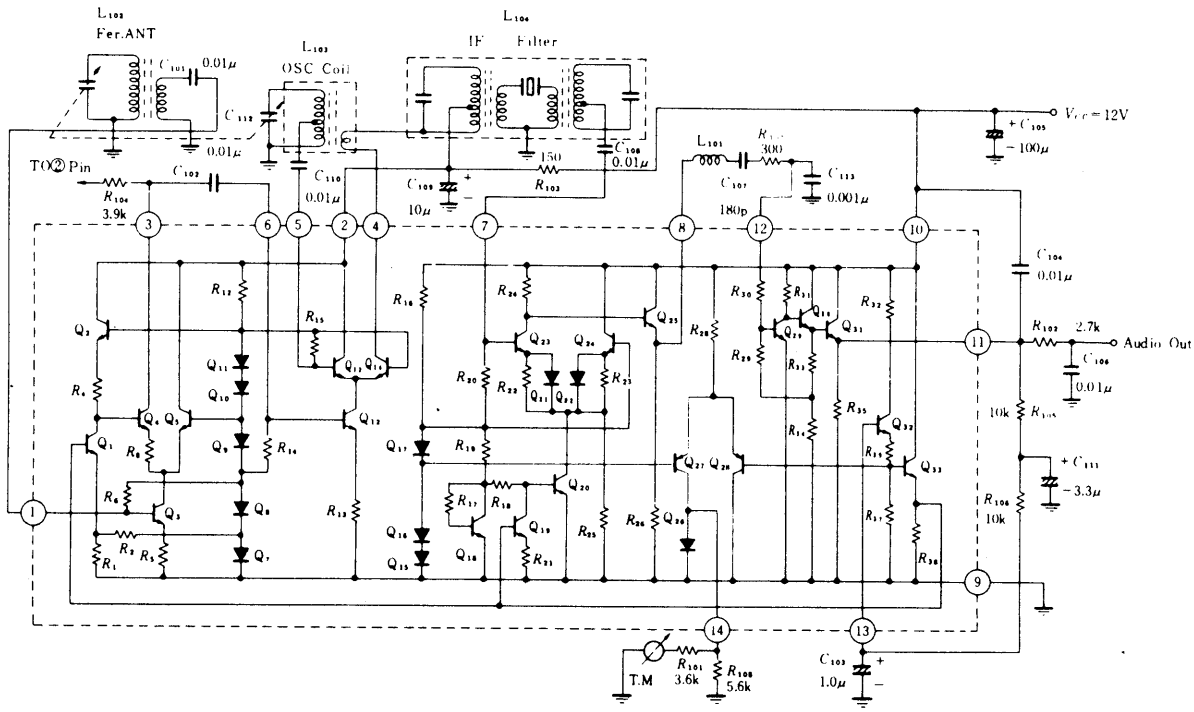

Linear IC and Module Circuits (cont'd)

ECG1238 Fig. 309

2-Watt Audio Power Amp

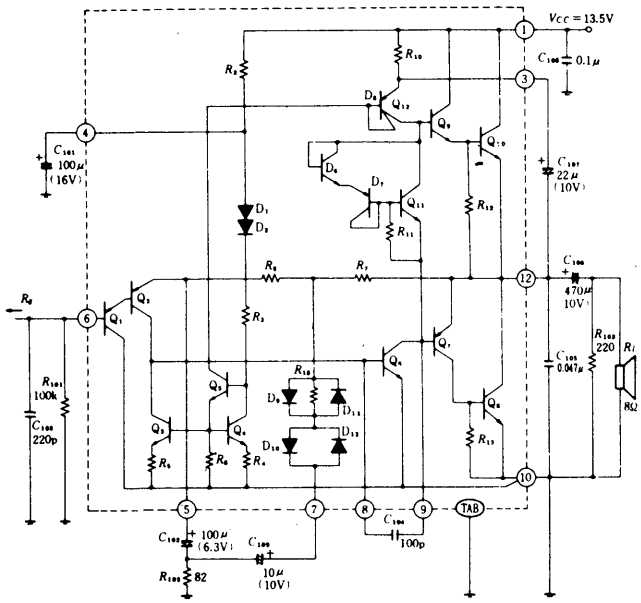

ECG1239 Fig. 302

Audio Output and CB Mod

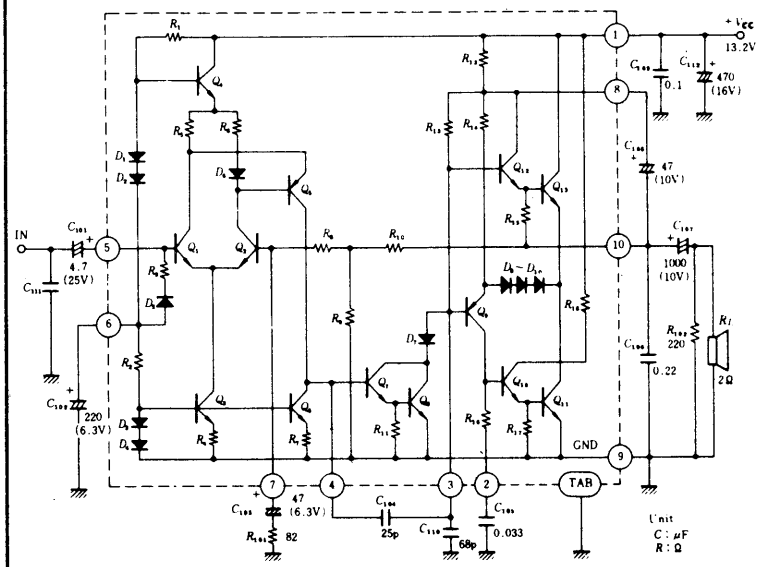

ECG1240 Fig. 308

5.5-Watt Audio Output and CB Mod

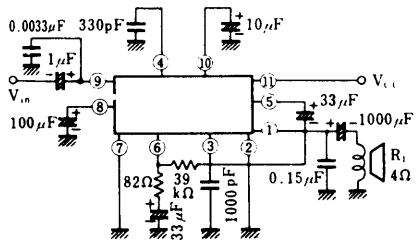

ECG1241 Fig. 268

Head Coil and Meter Driver

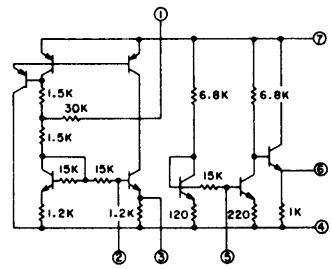

ECG1242 Fig. 336

AM/FM IF and AM Converter

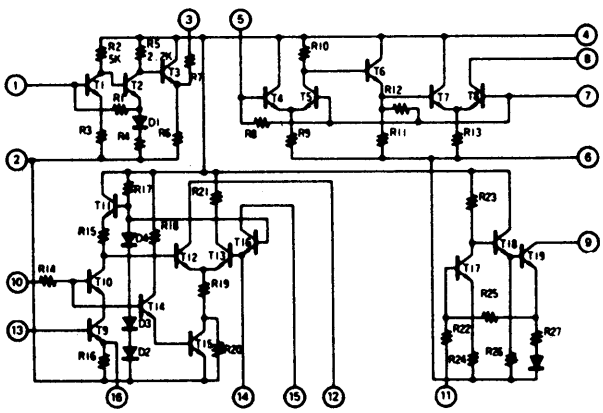

ECG1243 Fig. 315

FM Stereo Multiplex Decoder

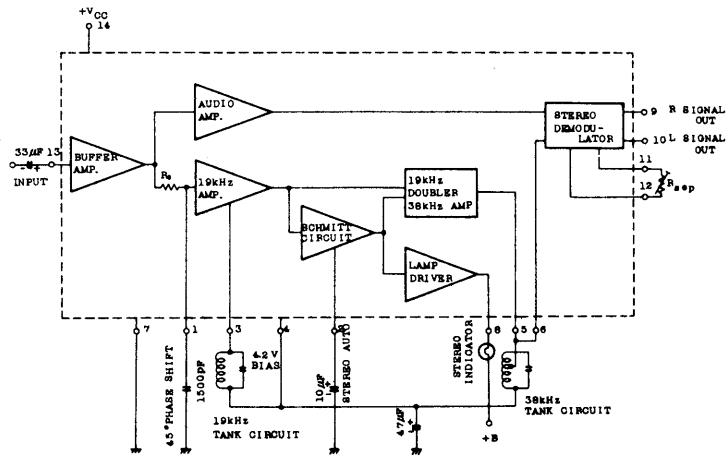

Linear IC and Module Circuits (cont'd)

ECG1244 Fig. 287

Audio Output

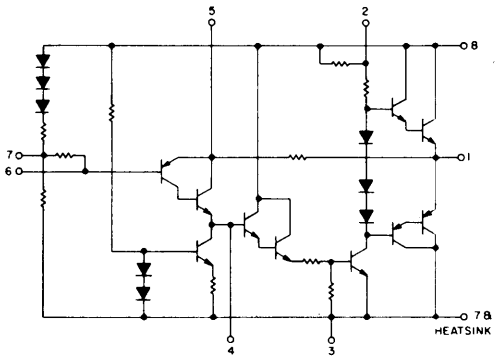

ECG1245 Fig. 300

Vertical Deflection

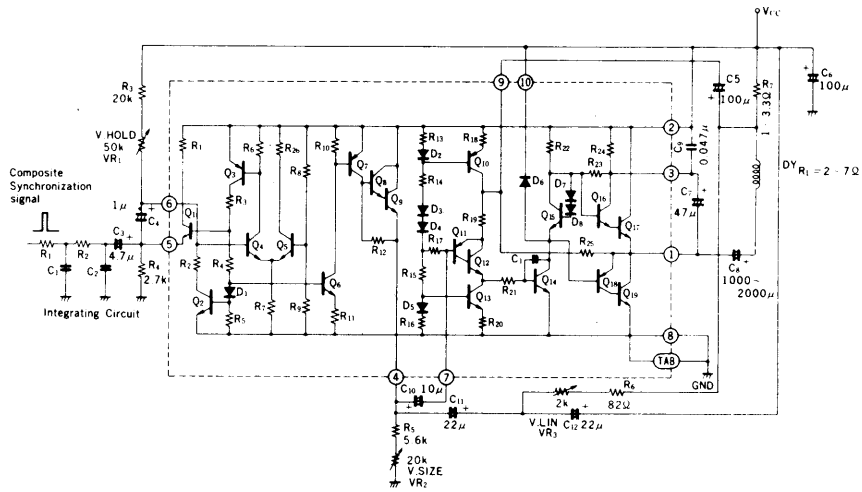

ECG1246 Fig. 327

TV Sound IF, Det AF PO

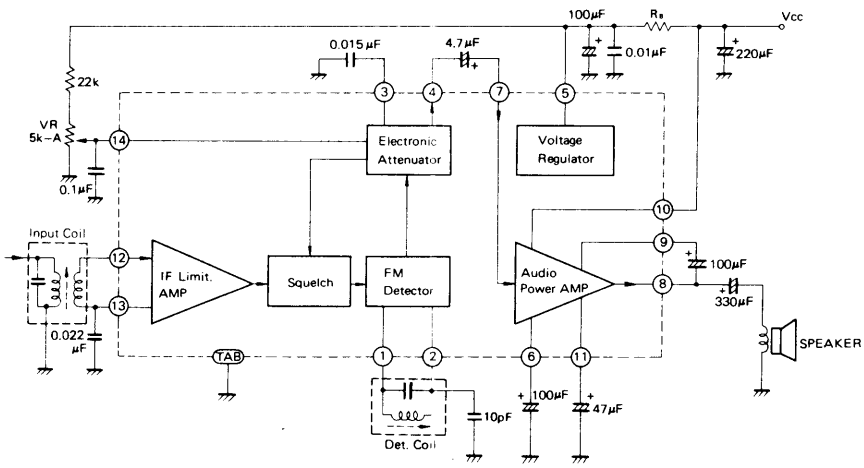

ECG1247 Fig. 307

Voltage Controlled OSC

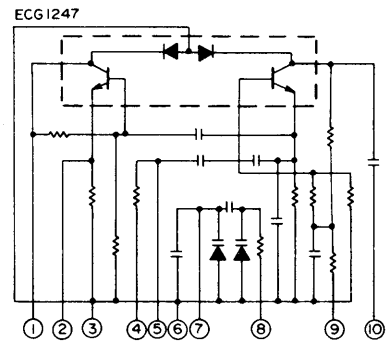

ECG1248 Fig. 335

FM Stereo Demod

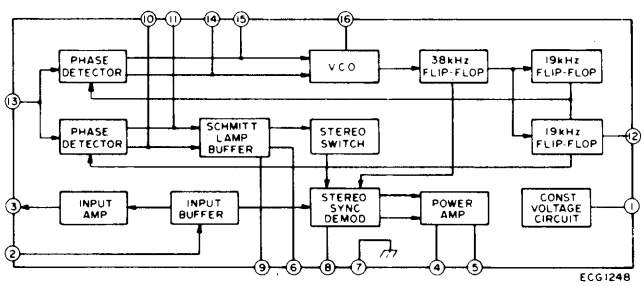

ECG1249 Fig. 272

· Balanced Modulator

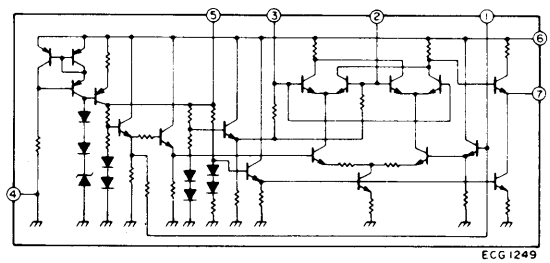

ECG1250
TV AFT

Fig. 336

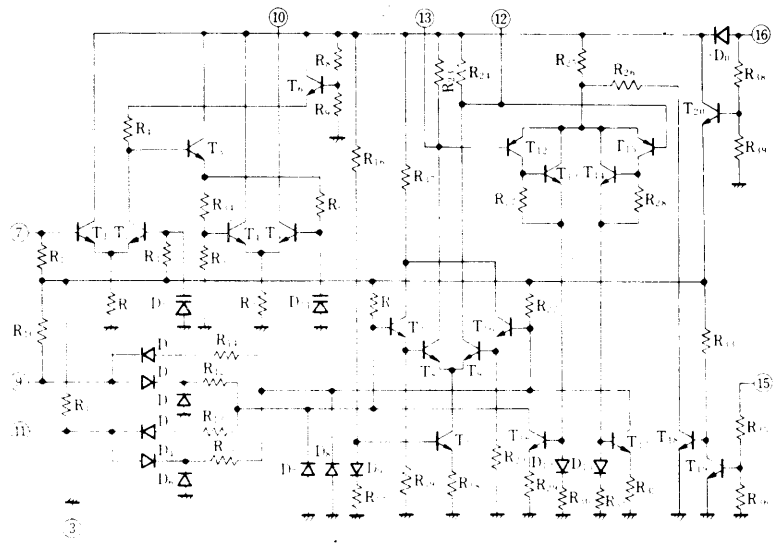

ECG1251
VR with Filter, 13.1 V

Fig. 283

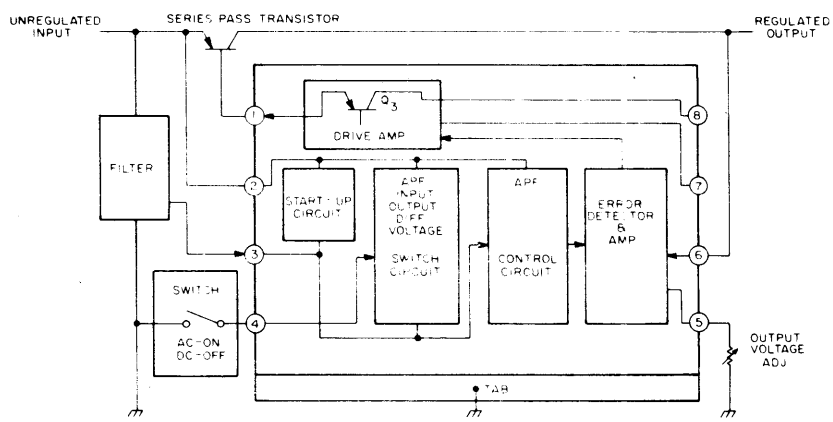

ECG1252
Dual Channel AF PO,
15 W/Ch

Fig. 341

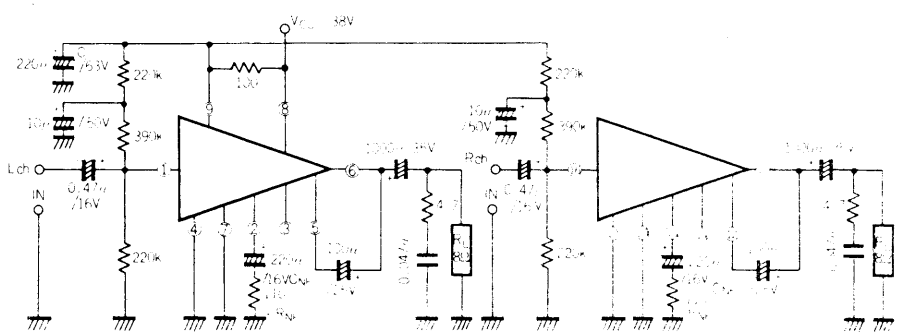

ECG1253
PLL Freq Synthesizer, CB

Fig. 348

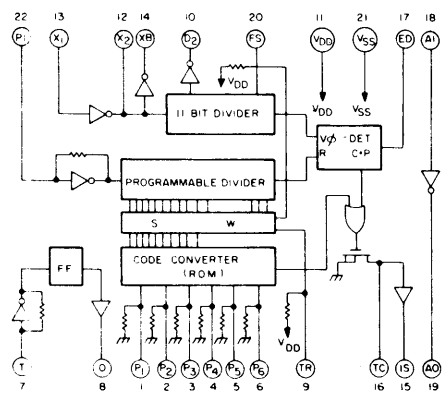

Linear IC and Module Circuits (cont'd)

ECG1254 Fig. 349

PLL Freq Synthesizer, CB

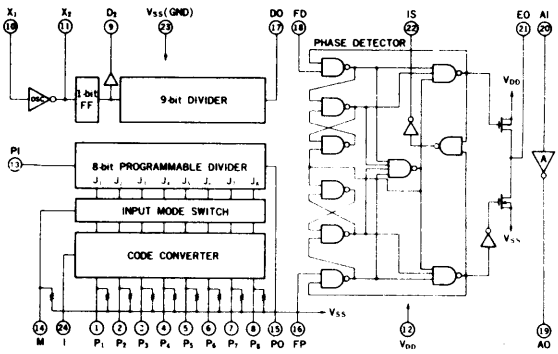

ECG1255 Fig. 335

PLL Freq Synthesizer, CB

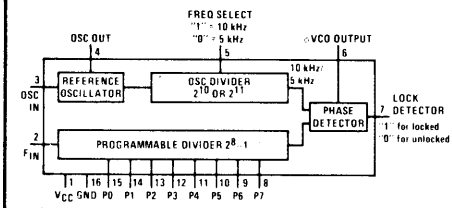

ECG1256 Fig. 299

AF PO, 5.8 W

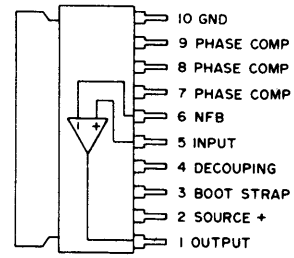

ECG1257 Fig. 327

FM IF, Det, AF PO

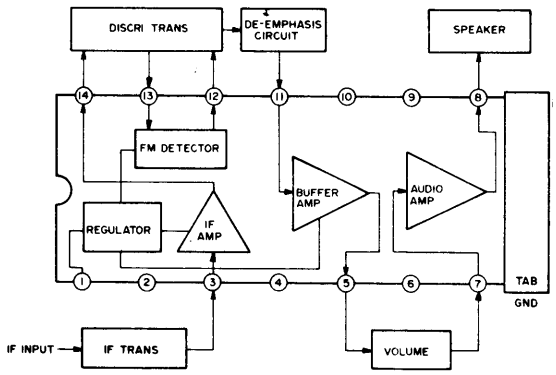

ECG1258 Fig. 328

Vert Hold, Osc, Output

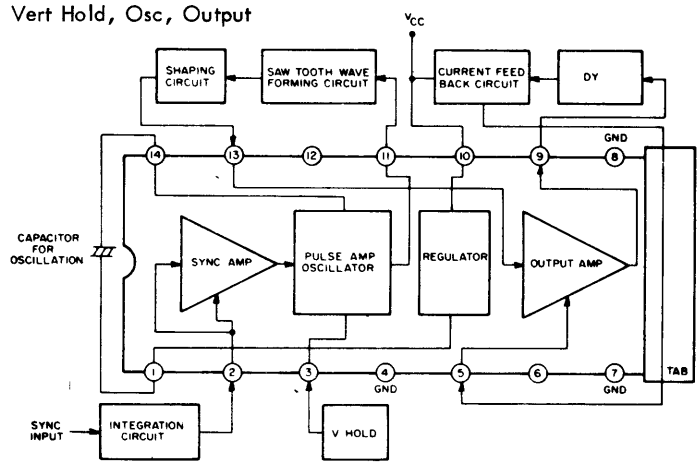

ECG1259 Fig. 295

AF PO, 6.5 W

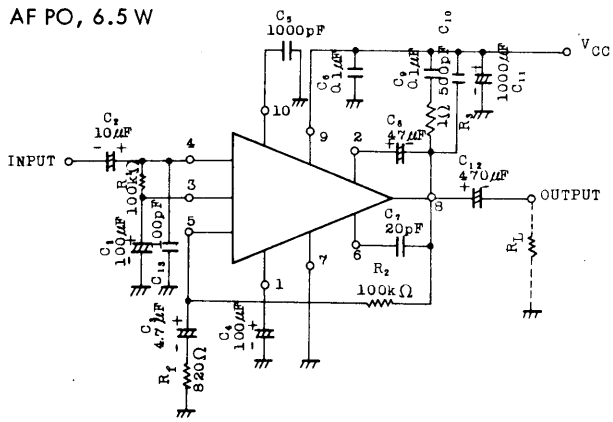

ECG1260 Fig. 302
ECG1261 Fig. 303

AF PO, 5.5 W

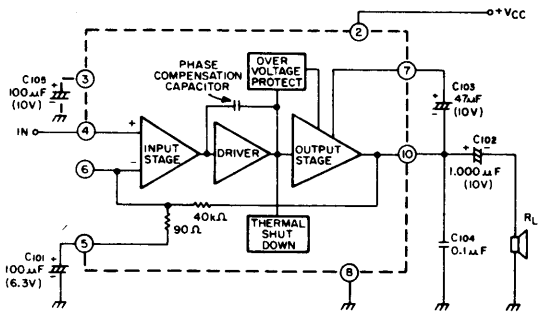

ECG1262 Fig. 307

Voltage Controlled OSC, CB

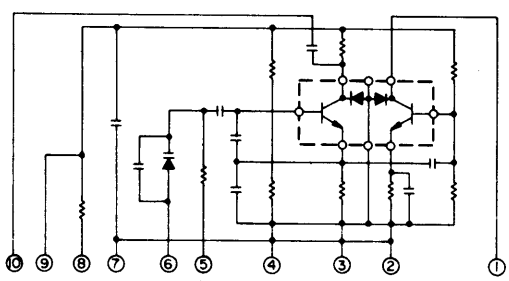

ECG1263 Fig. 335

Record/playback ckt, VCR.

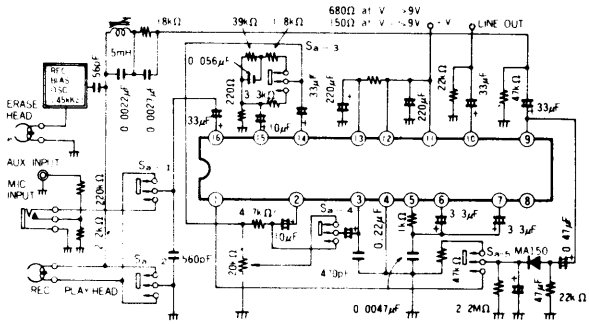

Linear IC and Module Circuits (cont'd)

ECG1264 Fig. 336

Luminance ckt, VCR.

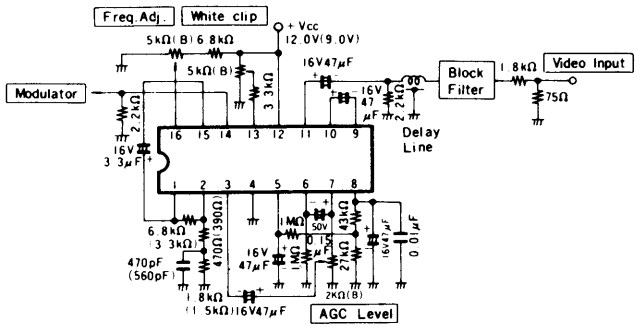

ECG1265 Fig. 345

Noise suppression ckt, VCR.

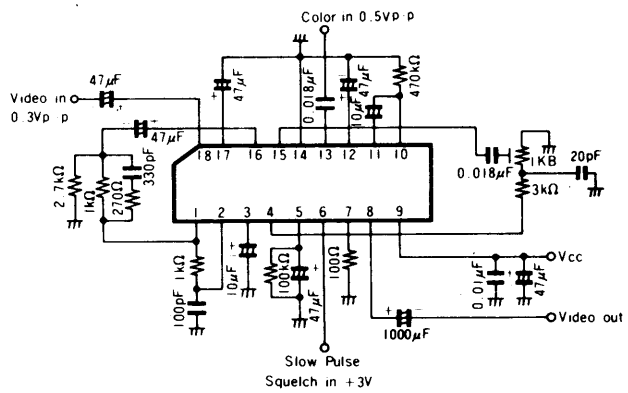

ECG1266 Fig. 336

Chroma processor, VCR.

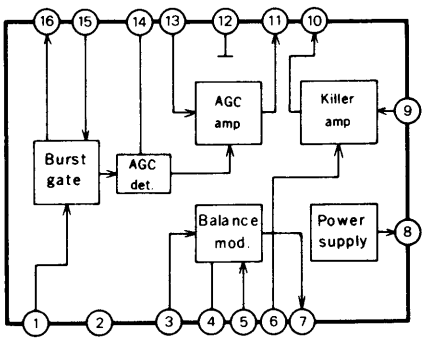

ECG1267 Fig. 336

Dropout compensator, VCR.

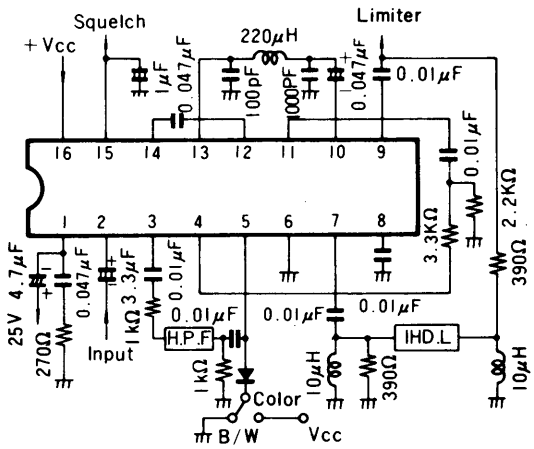

ECG1268 Fig. 351

DC servo control, VCR.

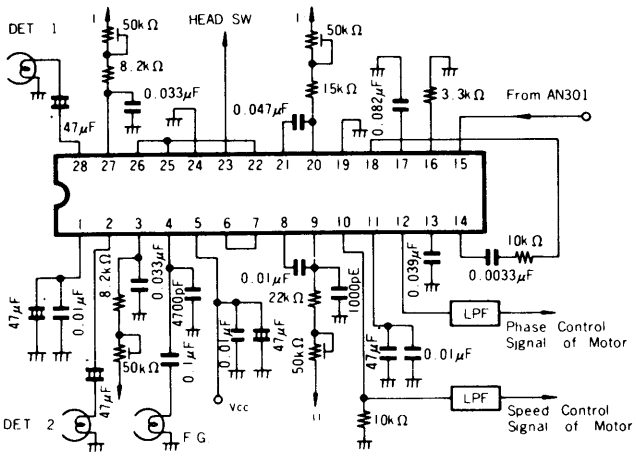

ECG1269 Fig. 351

Color processor, VCR.

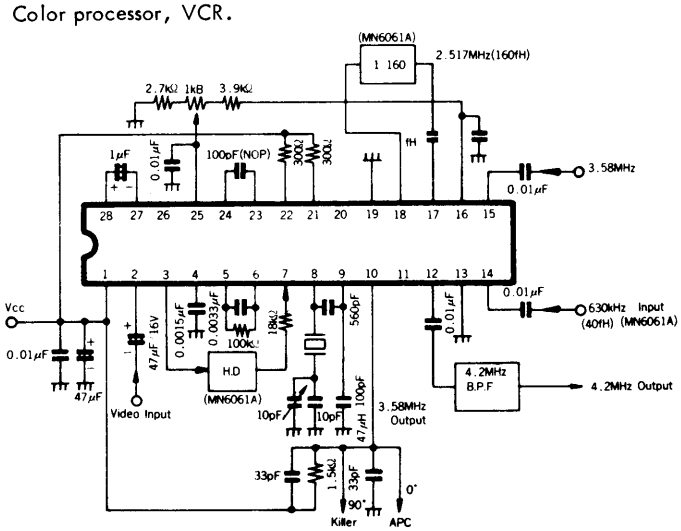

Linear IC and Module Circuits (cont'd)

ECG1271 Fig. 352

Control voltage generator.

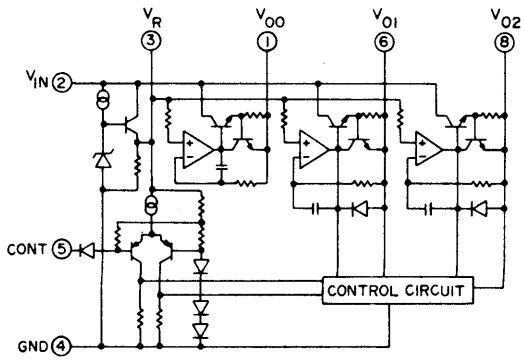

ECG1272 Fig. 336

PLL freq synthesizer.

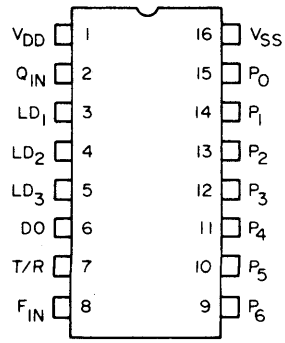

ECG1273 Fig. 354

Dual channel audio power amp.

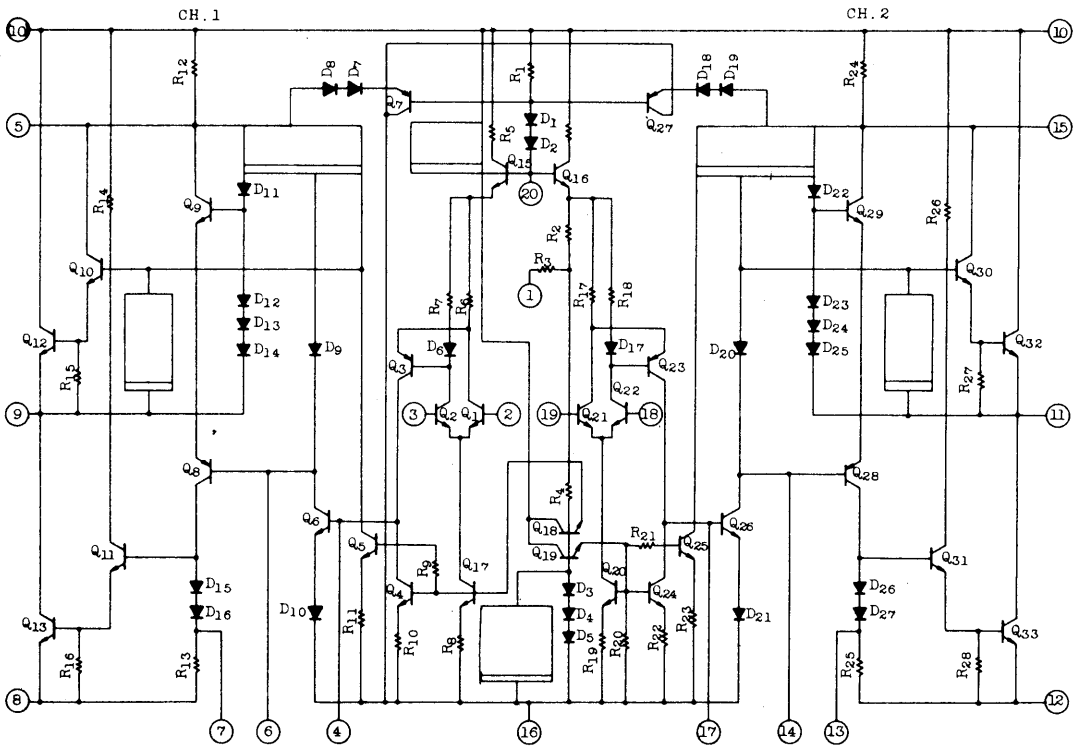

ECG1300 Fig. 286

TV Remote Control

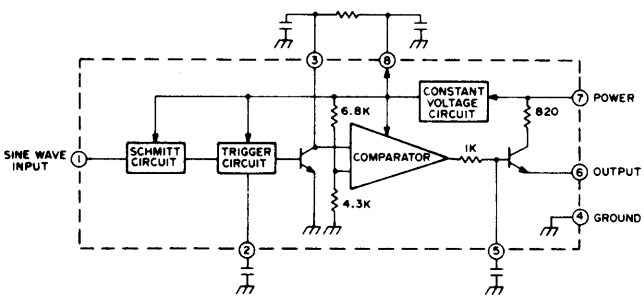

ECG1301 Fig. 274

AM/FM IF

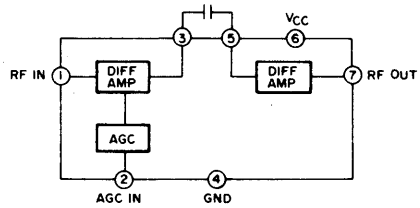

Linear IC and Module Circuits (cont'd)

ECG1302 Fig. 273

Dual OP Amp

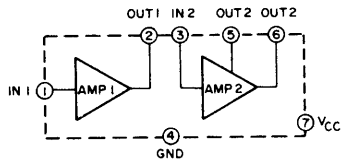

ECG1303 Fig. 323

AF Power Output

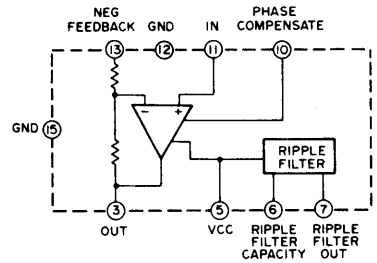

ECG1304 Fig. 350

Chroma Processor

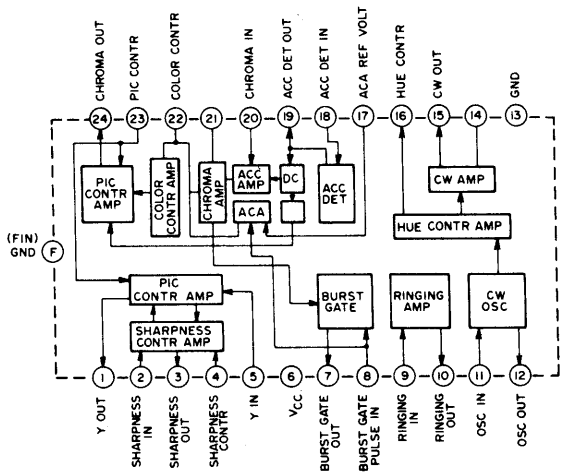

ECG1305 Fig. 350

Color Demodulator

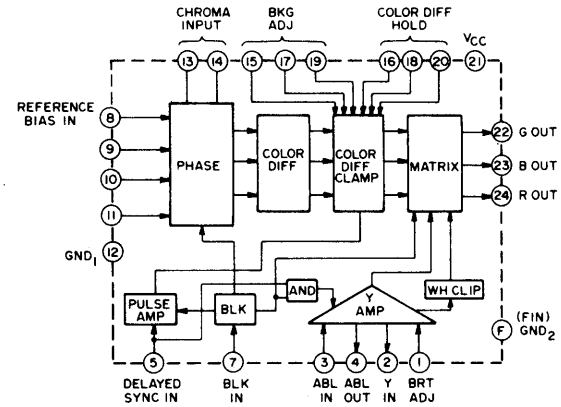

ECG1306 Fig. 350

Video IF

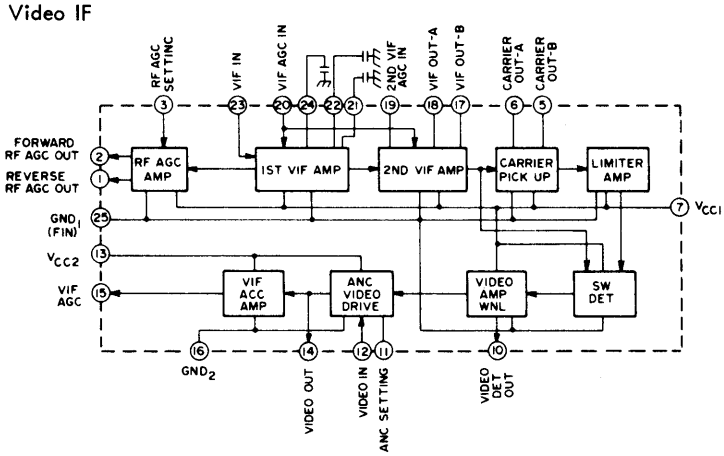

ECG1307 Fig. 350

Chroma Processor

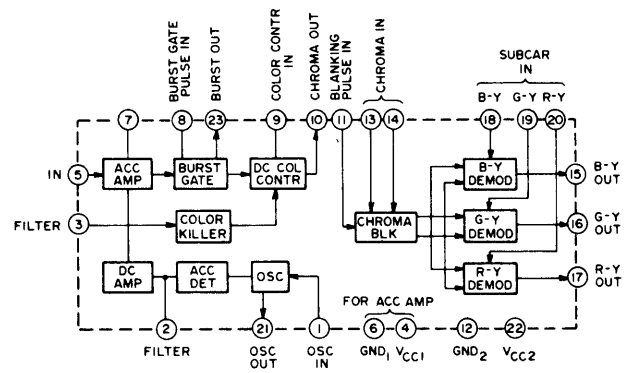

ECG1308 Fig. 324

TV Sound IF, Det

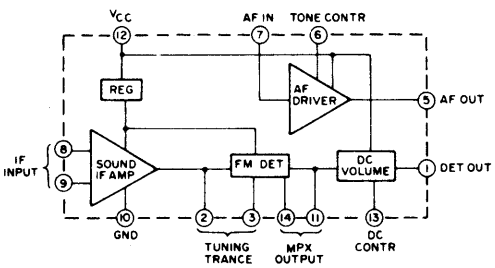

ECG1309 Fig. 273

FM IF

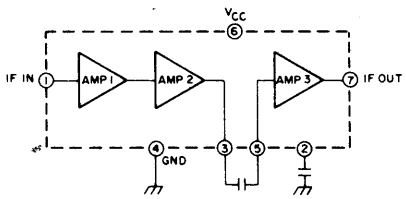

ECG1310 Fig. 325

FM/AM IF, AGC

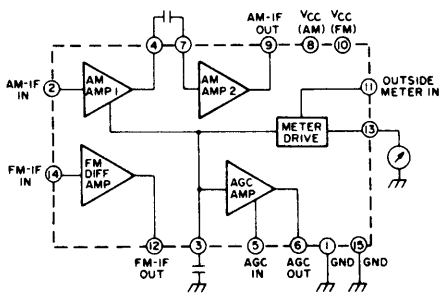

Linear IC and Module Circuits (cont'd)

ECG1311 Fig. 344

Noise Cancelling Amp

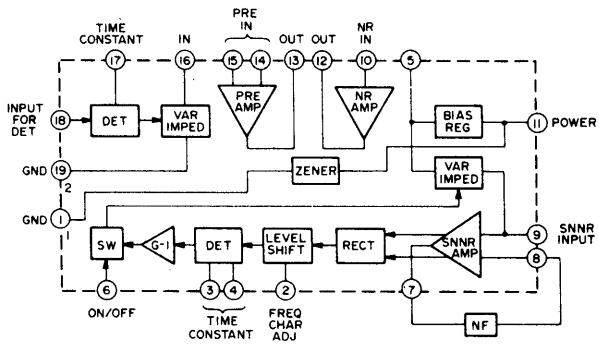

ECG1312 Fig. 314

Vert Osc, Amp

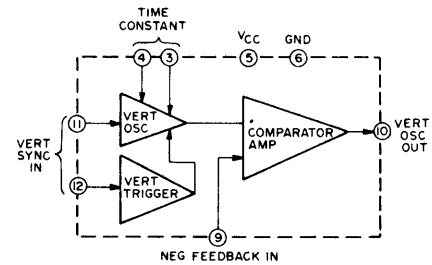

ECG1313 Fig. 323

Horiz Osc, Amp

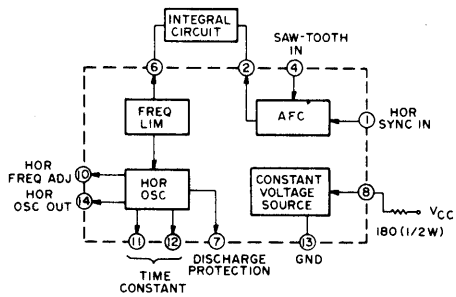

Linear IC and Module Outlines

Fig. 245

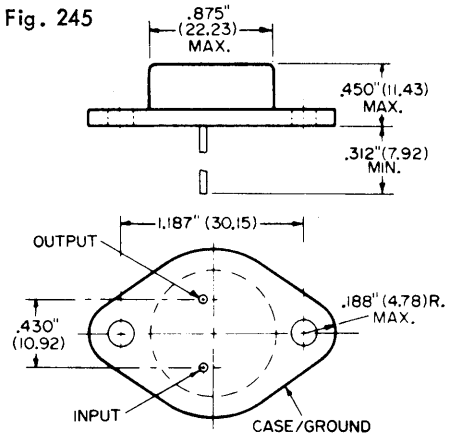

Fig. 246

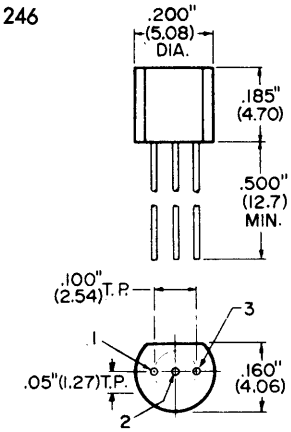

Fig. 247

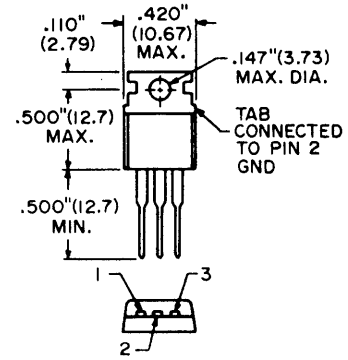

Fig. 248

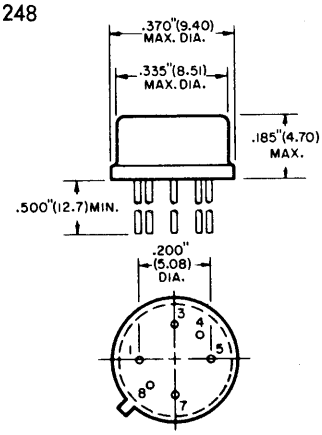

Fig. 249

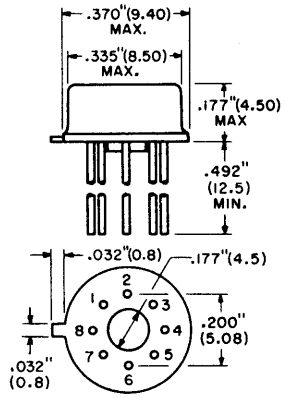

Fig. 250

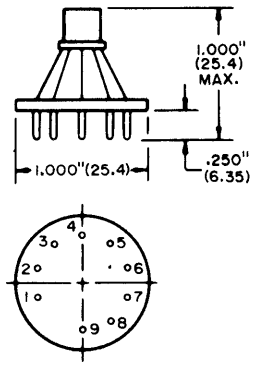

Fig. 251

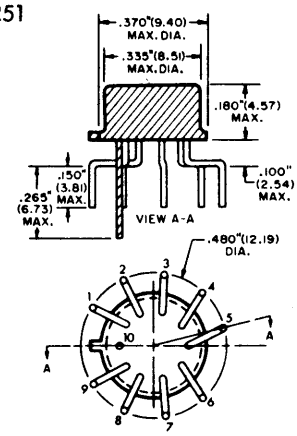

Fig. 252

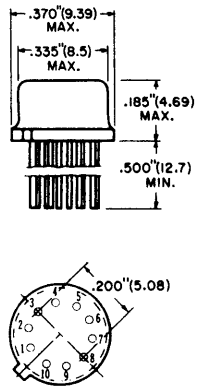

Fig. 253

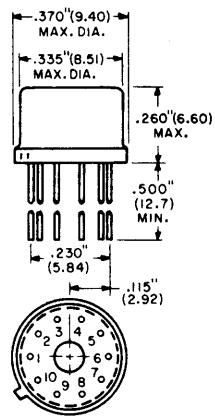

Fig. 254

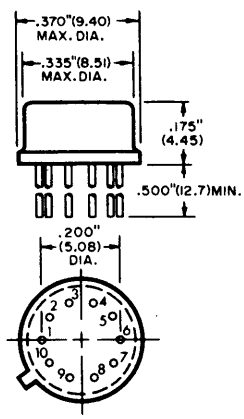

Fig. 255

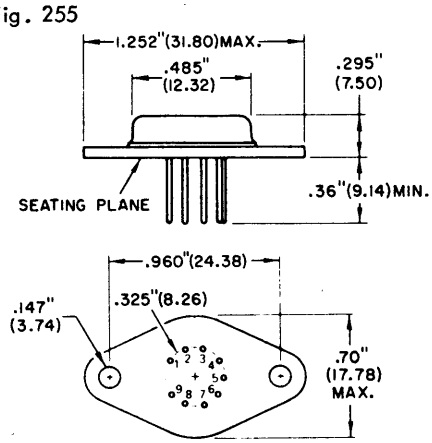

Fig. 256

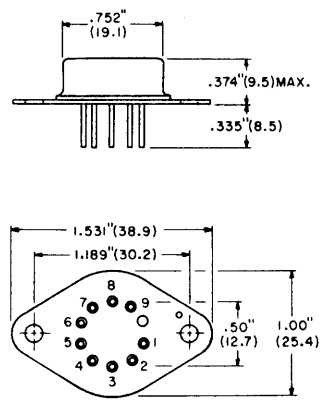

Linear IC and Module Outlines (cont'd)

Fig. 257

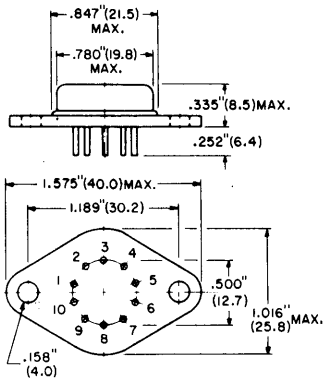

Fig. 258

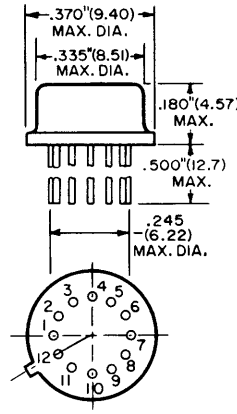

Fig. 259

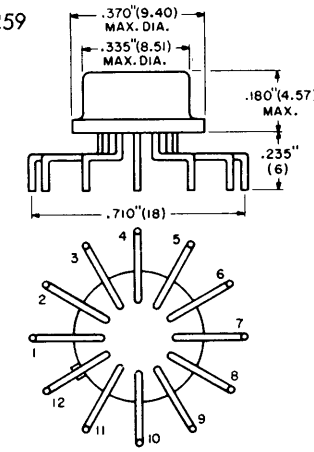

Fig. 260

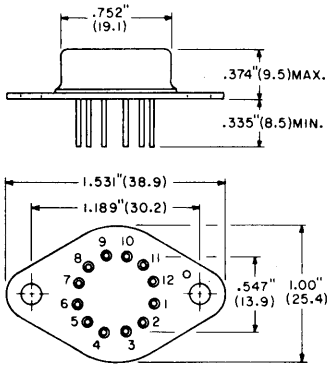

Fig. 261

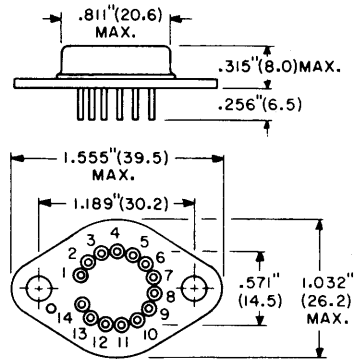

Fig. 262

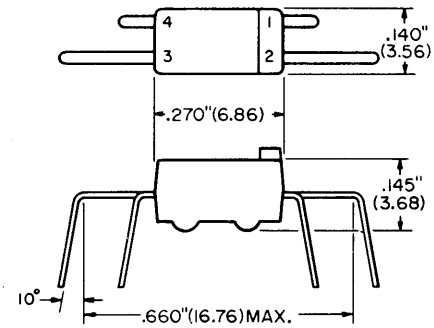

Fig. 263

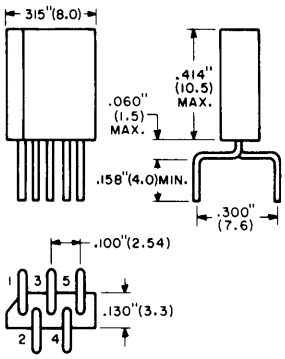

Fig. 264

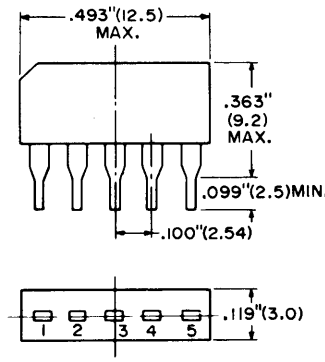

Fig. 265

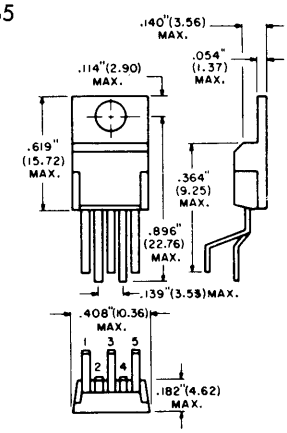

Fig. 266

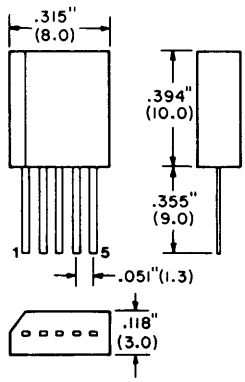

Fig. 267

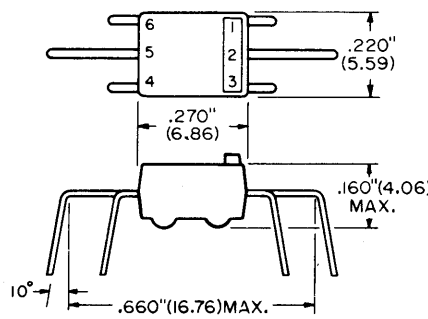

Fig. 268

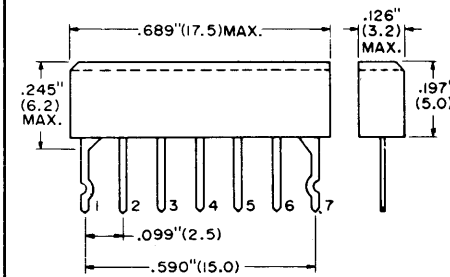

Dual inline plastic cases may have a round indentation on top surface for indexing in place of notched edge.

Linear IC and Module Outlines (cont'd)

Fig. 269

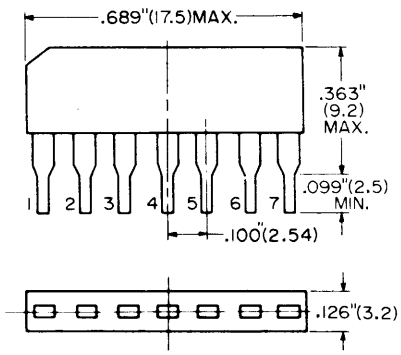

Fig. 270

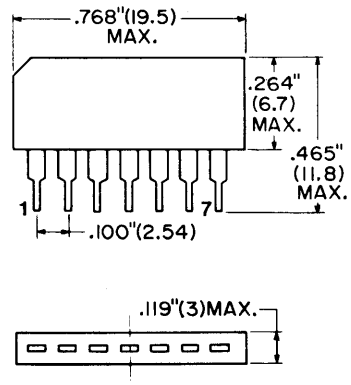

Fig. 271

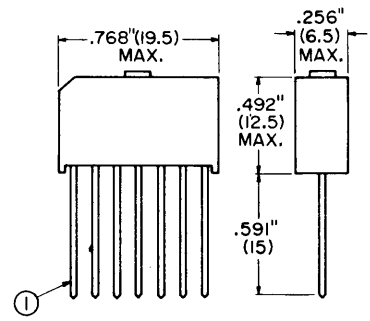

Fig. 272

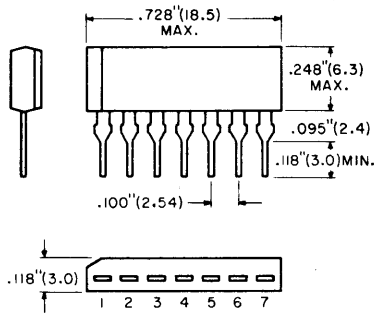

Fig. 273

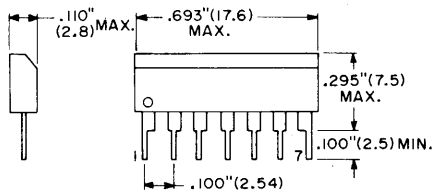

Fig. 274

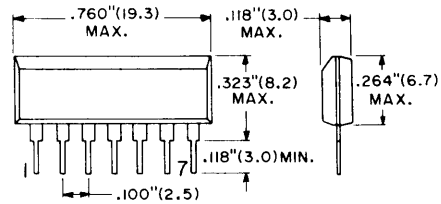

Fig. 275

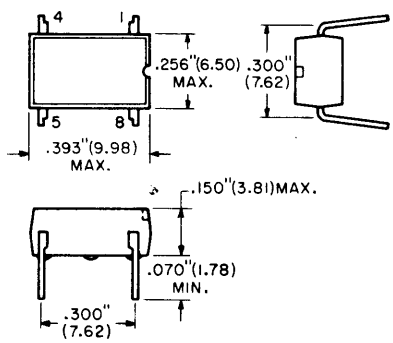

Fig. 276

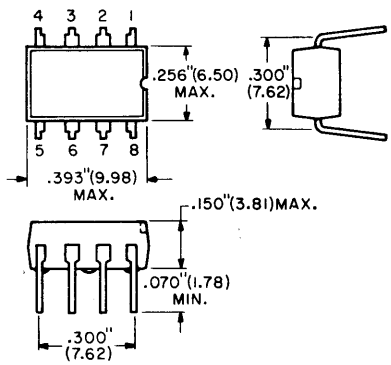

Fig. 277

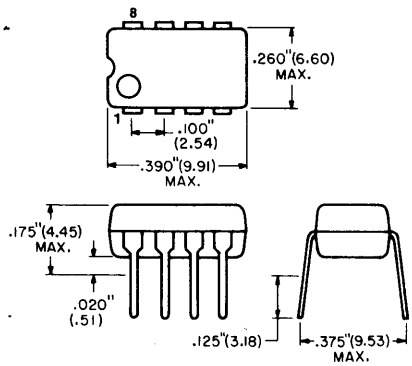

Fig. 278

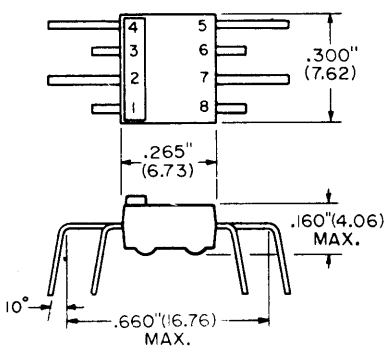

Fig. 279

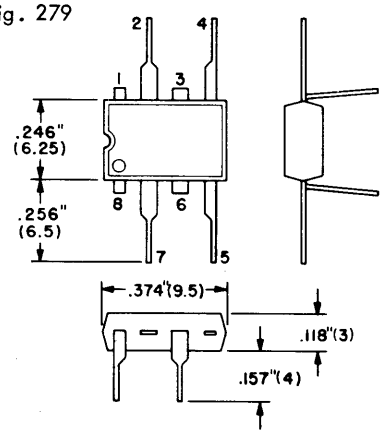

Fig. 280

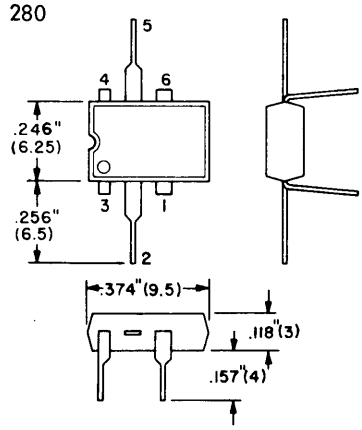

Linear IC and Module Outlines (cont'd)

Fig. 281

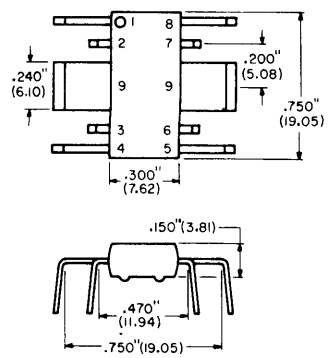

Fig. 282

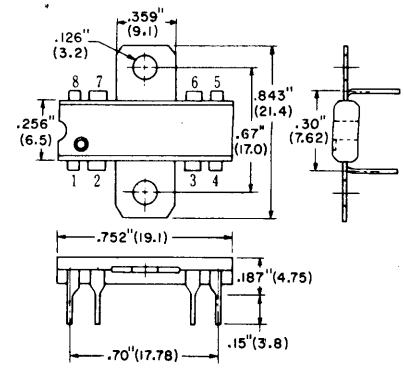

Fig. 283

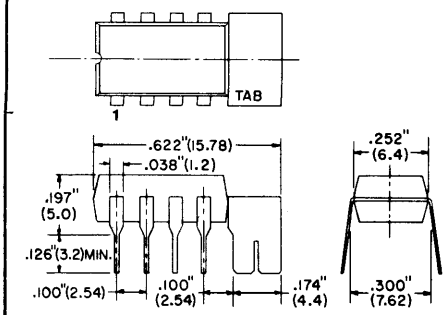

Fig. 284

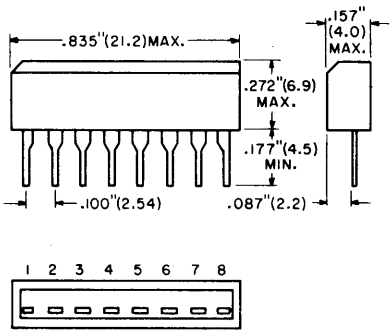

Fig. 285

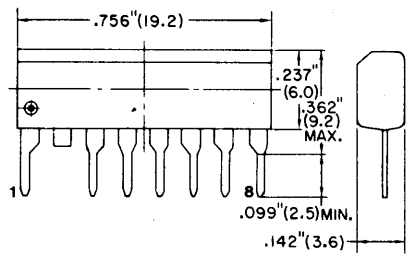

Fig. 286

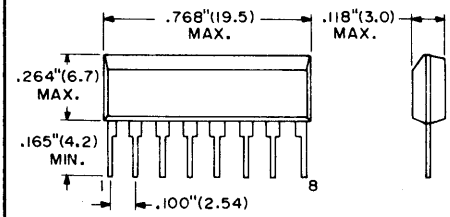

Fig. 287

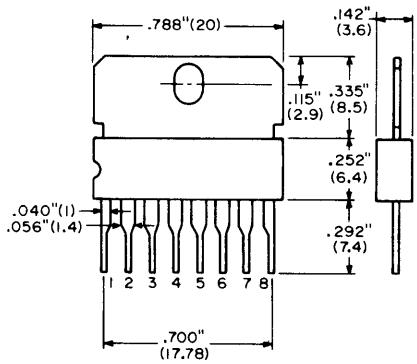

Fig. 288

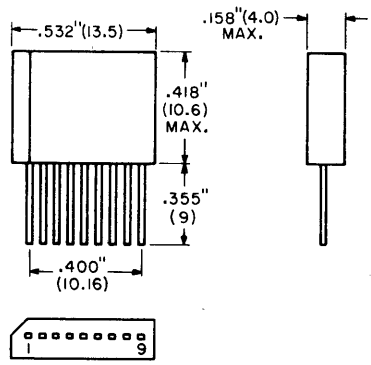

Fig. 289

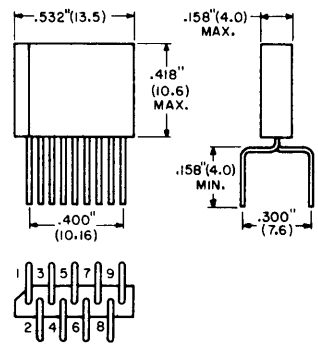

Fig. 290

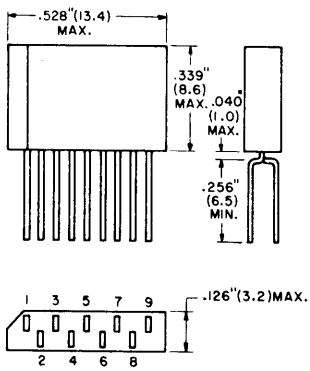

Fig. 291

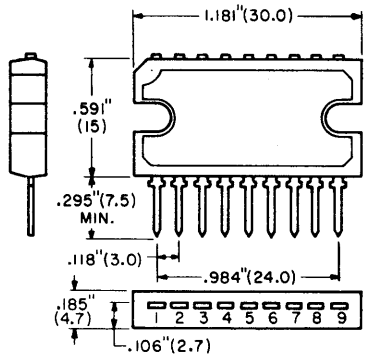

Fig. 292

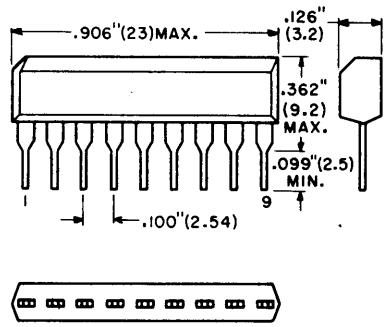

Dual inline plastic cases may have a round indentation on top surface for indexing in place of notched edge.

Linear IC and Module Outlines (cont'd)

Fig. 293

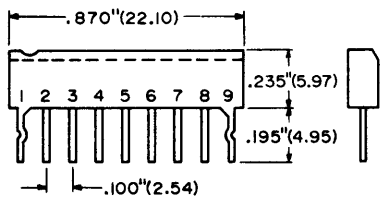

Fig. 294

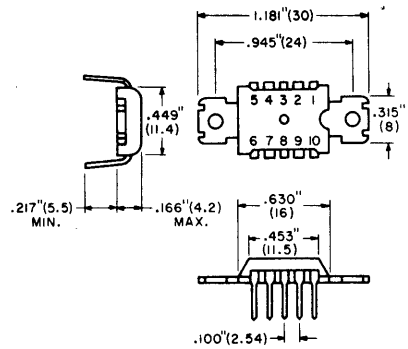

Fig. 295

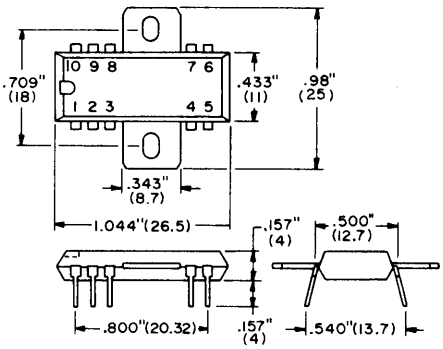

Fig. 296

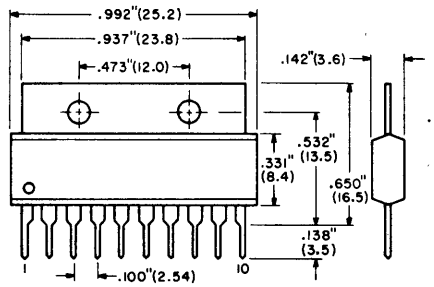

Fig. 297

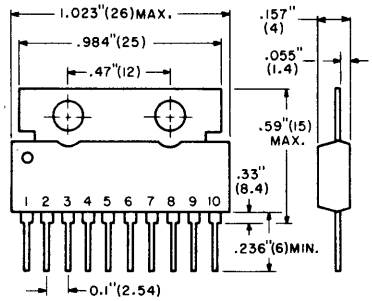

Fig. 298

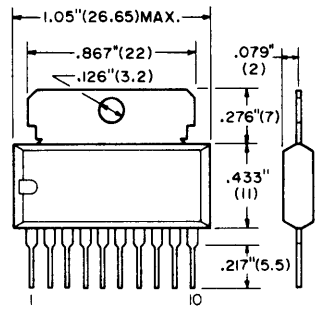

Fig. 299

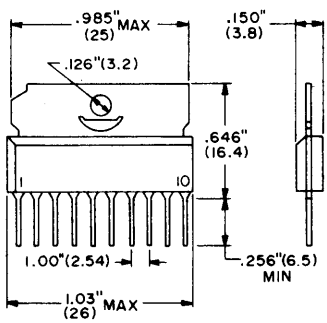

Fig. 300

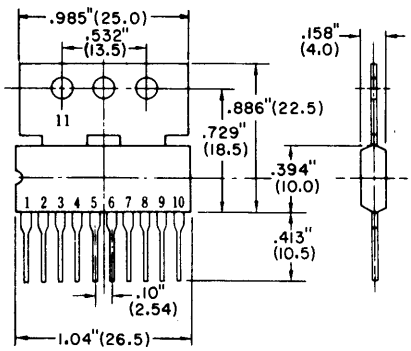

Fig. 301

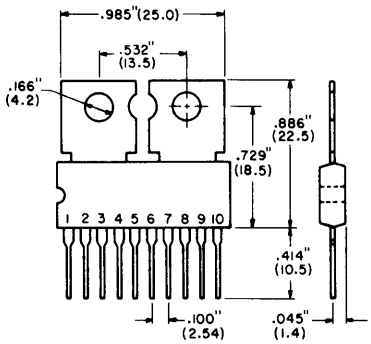

Fig. 302

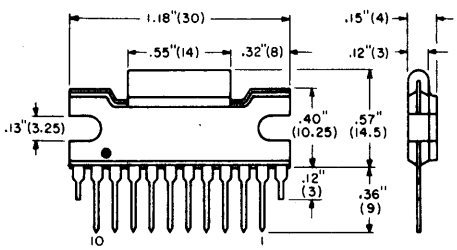

Fig. 303

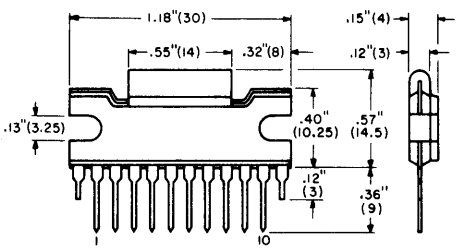

Fig. 304

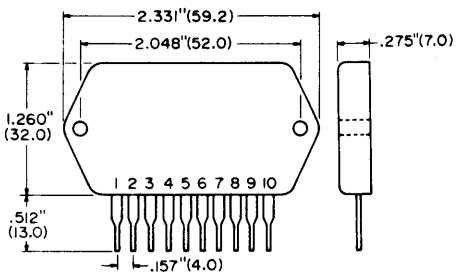

Linear IC and Module Outlines (cont'd)

Fig. 305

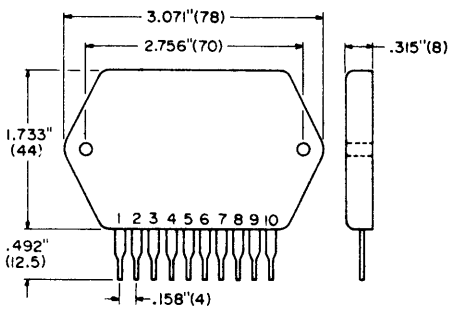

Fig. 306

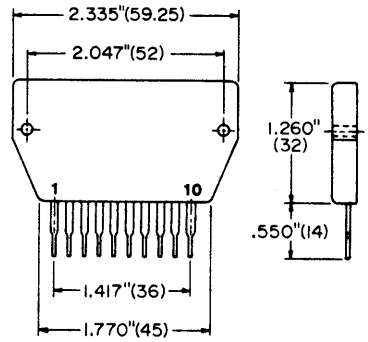

Fig. 307

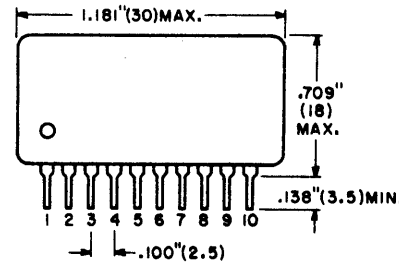

Fig. 308

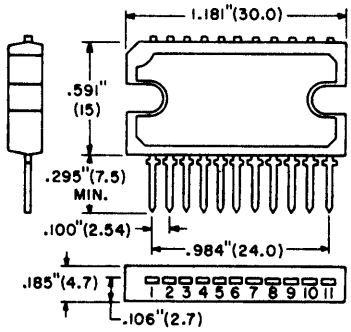

Fig. 309

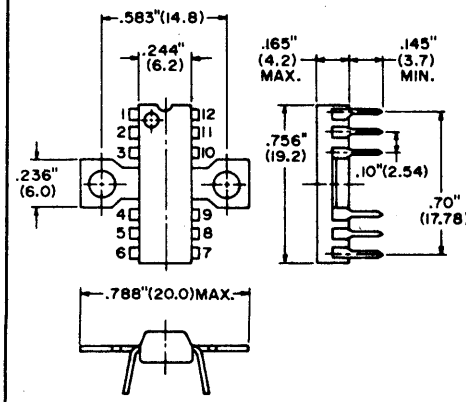

Fig. 310

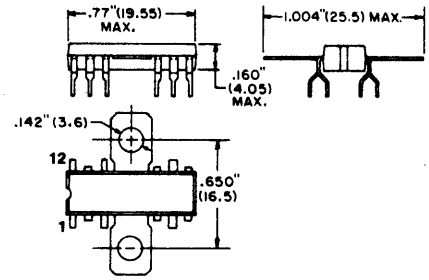

Fig. 311

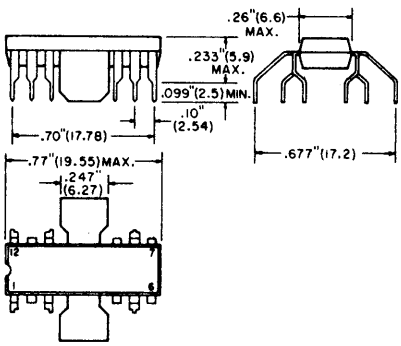

Fig. 312

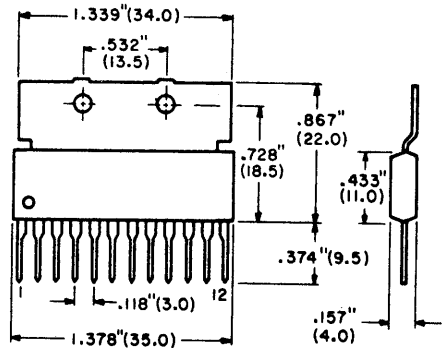

Fig. 313

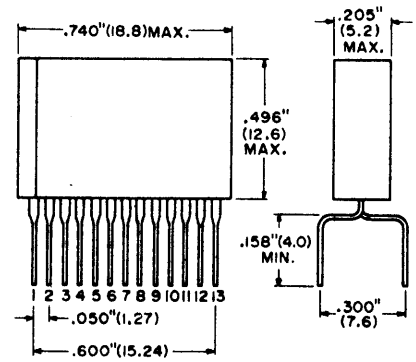

Fig. 314

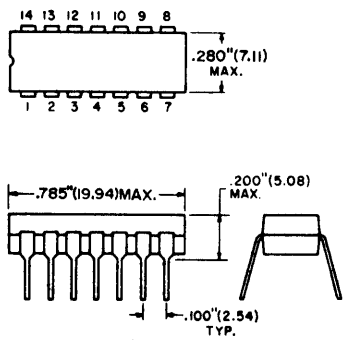

NOTE-PAINT BAND (ON SOME) DENOTES INDEX

Fig. 315

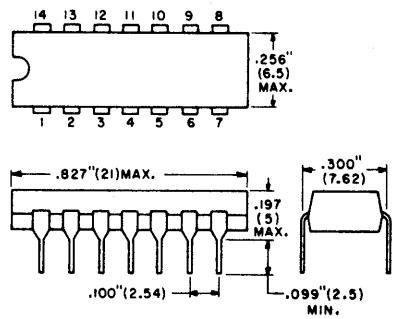

Fig. 316

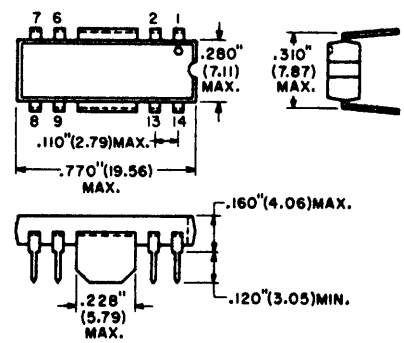

Dual inline plastic cases may have a round indentation on top surface for indexing in place of notched edge.

Linear IC and Module Outlines (cont'd)

Fig. 317

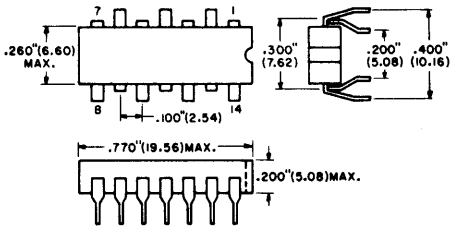

Fig. 318

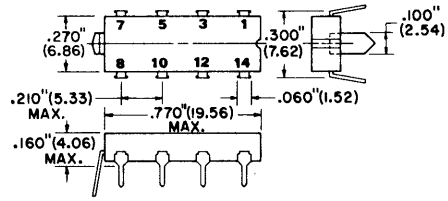

Fig. 319

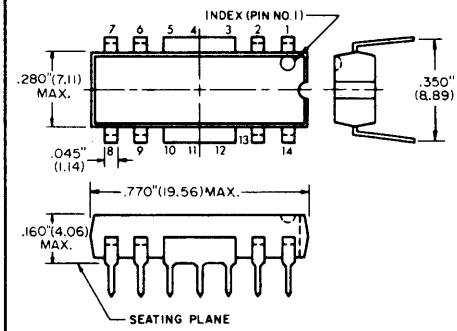

Fig. 320

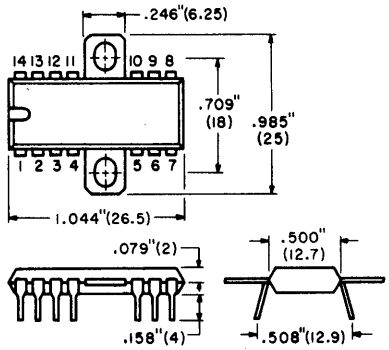

Fig. 321

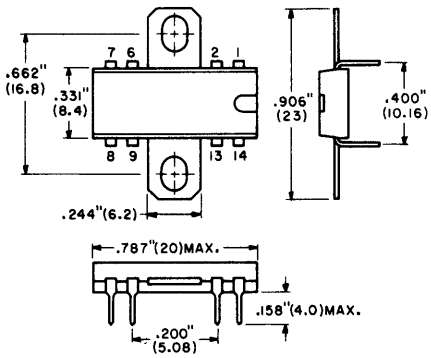

Fig. 322

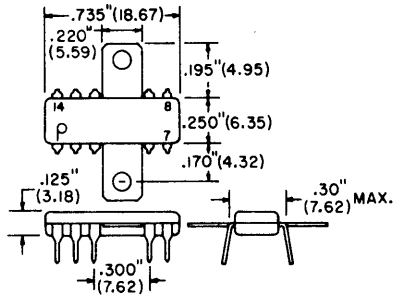

Fig. 323

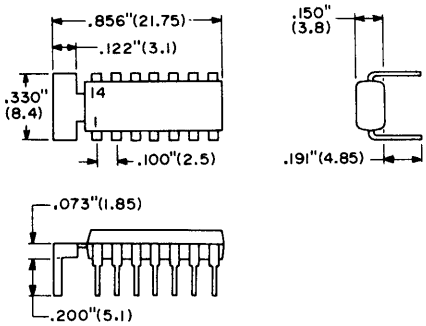

Fig. 324

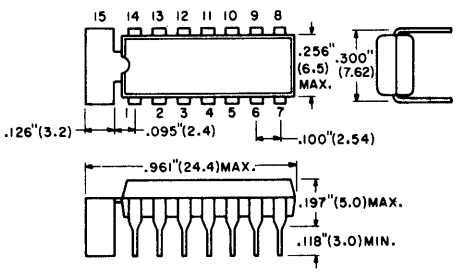

Fig. 325

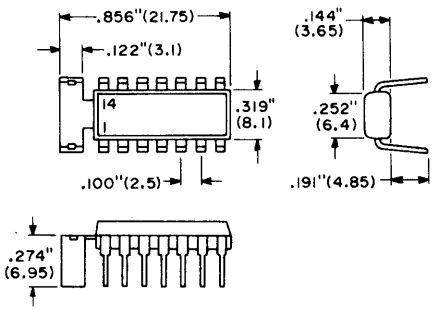

Fig. 326

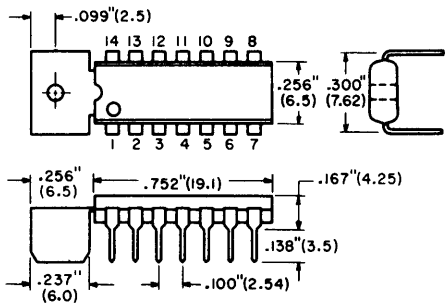

Fig. 327

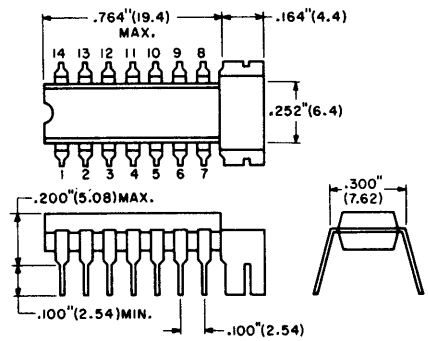

Fig. 328

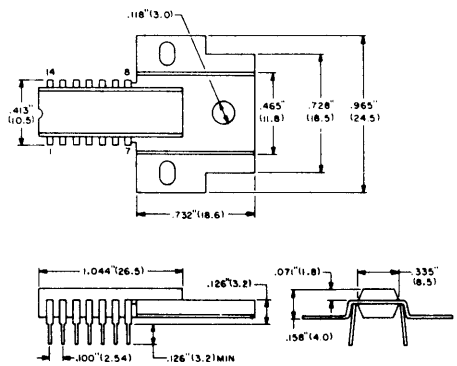

Linear IC and Module Outlines (cont'd)

Fig. 329

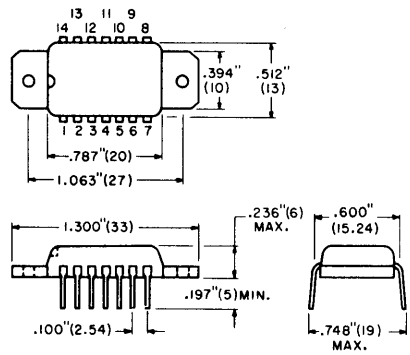

Fig. 330

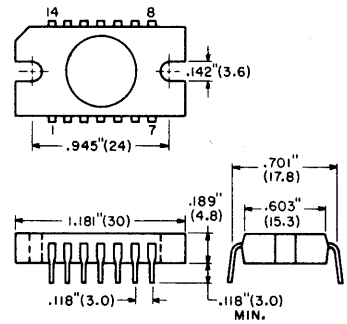

Fig. 331

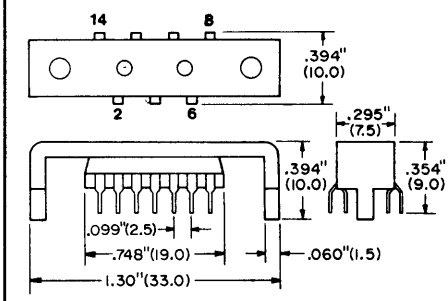

Fig. 332

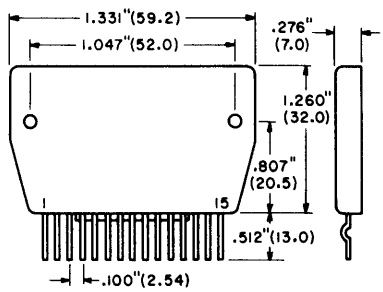

Fig. 333

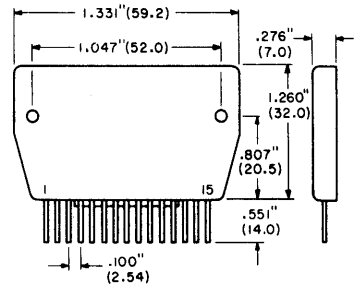

Fig. 334

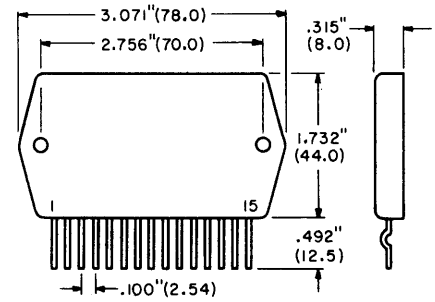

Fig. 335

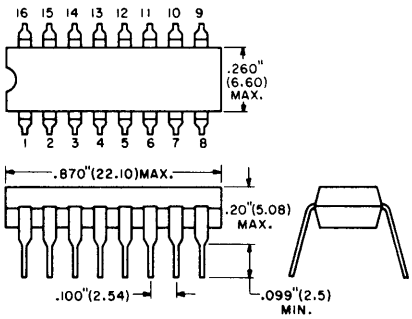

Fig. 336

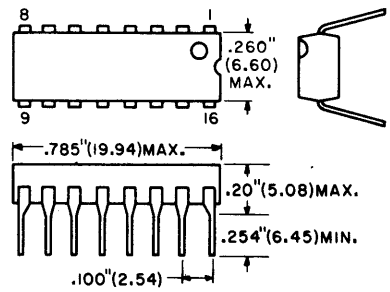

Fig. 337

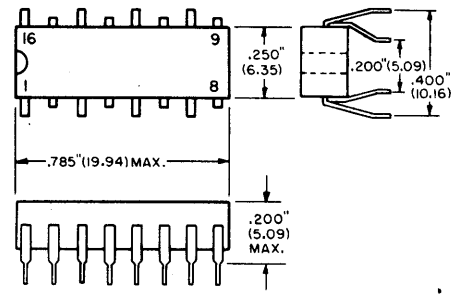

Fig. 338

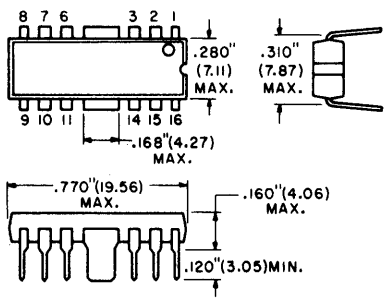

Fig. 339

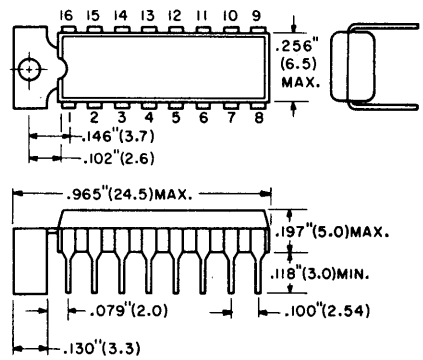

Fig. 340

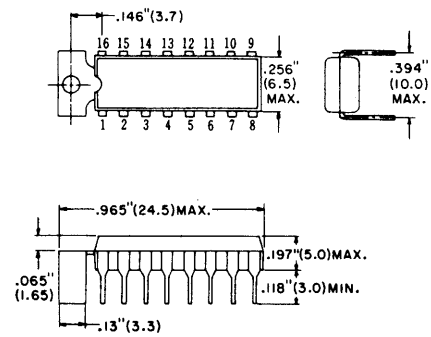

Dual inline plastic cases may have a round indentation on top surface for indexing in place of notched edge.

Linear IC and Module Outlines (cont'd)

Fig. 341

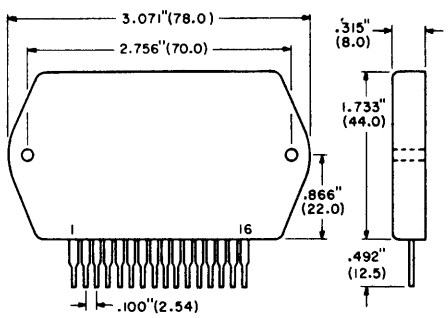

Fig. 342

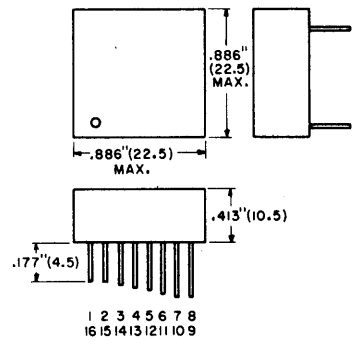

Fig. 343

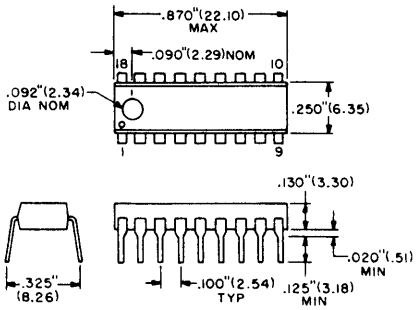

Fig. 344

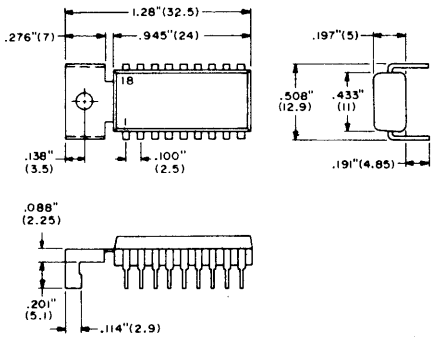

Fig. 345

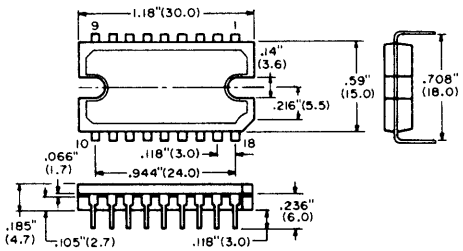

Fig. 346

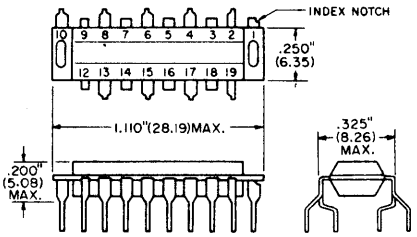

Fig. 347

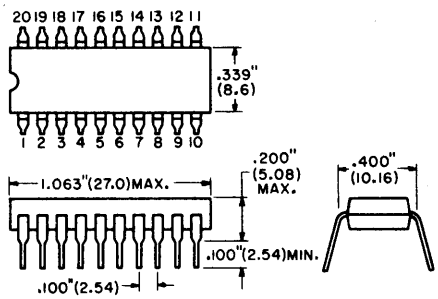

Fig. 348

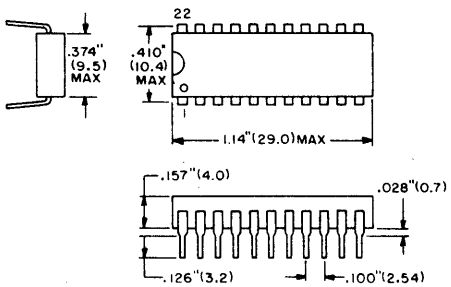

Fig. 349

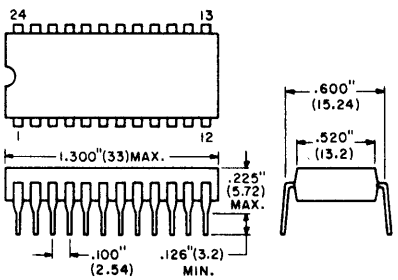

Fig. 350

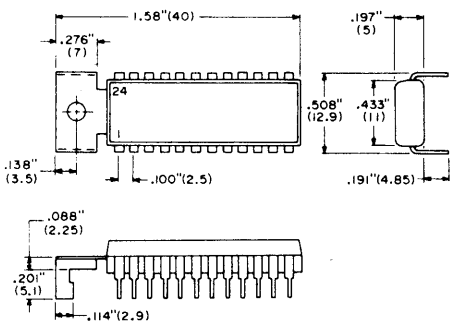

Fig. 351

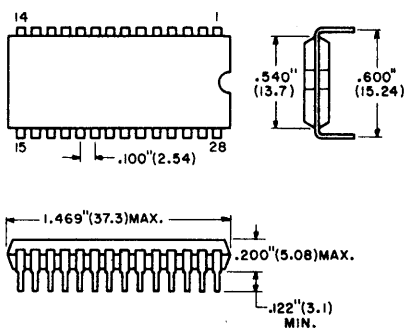

Fig. 352

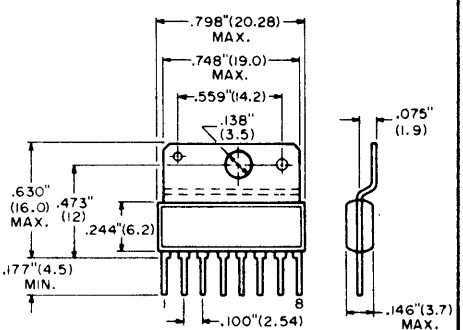

Linear IC and Module Outlines (cont'd)

Fig. 353

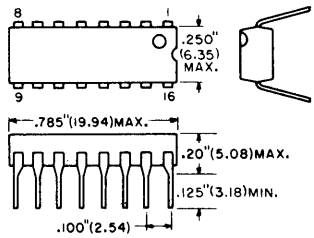

Fig. 354

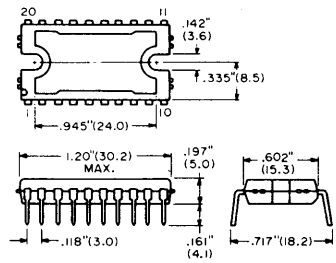

Dual inline plastic cases may have a round indentation on top surface for indexing in place of notched edge.

Digital Integrated Circuits

CMOS

ECG4000 — Fig. 355

Dual 3-Input NOR Gate Plus Inverter

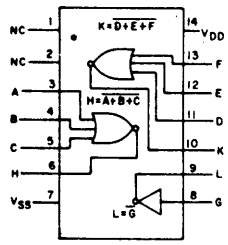

ECG4001B — Fig. 355

Quad 2-Input NOR Gate

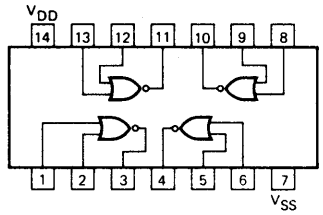

ECG4002B — Fig. 355

Dual 4-Input NOR Gate

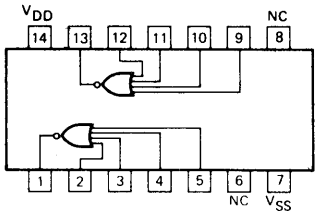

ECG4006B — Fig. 355

18-Stage Static Shift Register

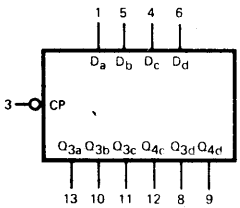

V_{DD} = Pin 14
V_{SS} = Pin 7
NC = Pin 2

D_a-D_d	Data Inputs
$\overline{CP}$	Clock Input (H→L Edge-Triggered)
Q_{3a}-Q_{3d}, Q_{4c}, Q_{4d}	Data Outputs

ECG4007B — Fig. 355

Dual Complementary Pair with Inverter

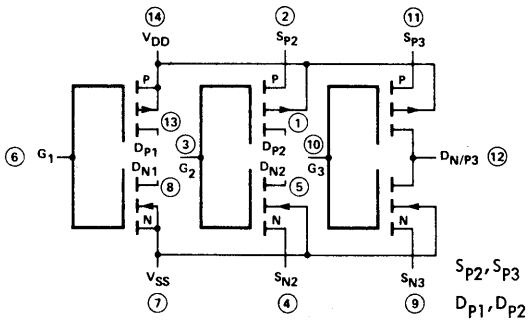

S_{P2}, S_{P3}	Source Connection to Second and Third p-channel Transistors
D_{P1}, D_{P2}	Drain Connection from the First and Second p-channel Transistors
D_{N1}, D_{N2}	Drain Connection from the First and Second n-channel Transistors
S_{N2}, S_{N3}	Source Connection to the Second and Third n-channel Transistors
$D_{N/P3}$	Common Connection to the Third p-channel and n-channel Transistor Drains
G_1-G_3	Gate Connection to n- and p-channel Transistors 1, 2 and 3

ECG4008B — Fig. 356

4-Bit Full Adder

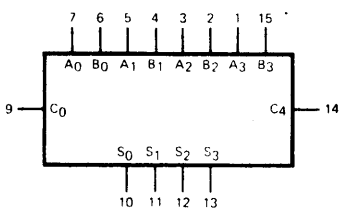

V_{DD} = Pin 16
V_{SS} = Pin 8

A_0-A_3, B_0-B_3	Data Inputs
C_0	Carry Input
S_0-S_3	Sum Outputs
C_4	Carry Output

ECG4011B — Fig. 355

Quad 2-Input NAND Gate

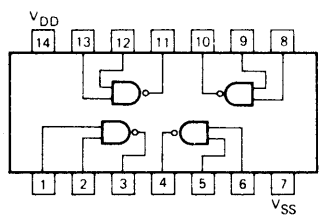

ECG4012B — Fig. 355

Dual 4-Input NAND Gate

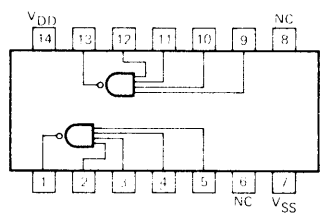

ECG4013B — Fig. 355

Dual "D" Flip-Flop with Set/Reset

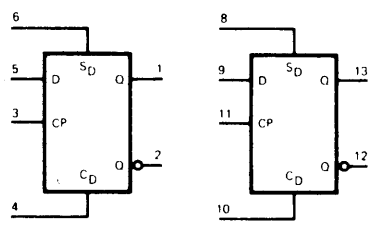

V_{DD} = Pin 14
V_{SS} = Pin 7

D	Data Input
CP	Clock Input (L→H Edge-Triggered)
S_D	Asynchronous Set Direct Input (Active HIGH)
C_D	Asynchronous Clear Direct Input (Active HIGH)
Q	True Output
$\overline{Q}$	Complement Output

ECG4014B — Fig. 356

8-Stage Static Shift Register

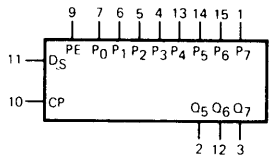

V_{DD} = Pin 16
V_{SS} = Pin 8

PE	Parallel Enable Input
P_0-P_7	Parallel Data Inputs
D_S	Serial Data Input
CP	Clock Input (L → H Edge-Triggered)
Q_5, Q_6, Q_7	Buffered Parallel Outputs from the Last Three Stages

ECG4015B — Fig. 356

Dual 4-Stage Static Shift Register

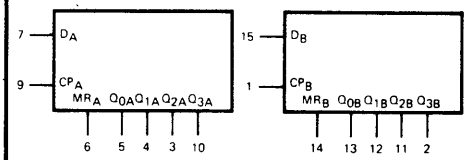

V_{DD} = Pin 16
V_{SS} = Pin 8

D_A, D_B	Serial Data Input
MR_A, MR_B	Master Reset Input (Active HIGH)
CP_A, CP_B	Clock Input (L → H Edge-Triggered)
$Q_{0A}, Q_{1A}, Q_{2A}, Q_{3A}$	Parallel Outputs
$Q_{0B}, Q_{1B}, Q_{2B}, Q_{3B}$	Parallel Outputs

ECG4016B — Fig. 355

Quad Bilateral Switch

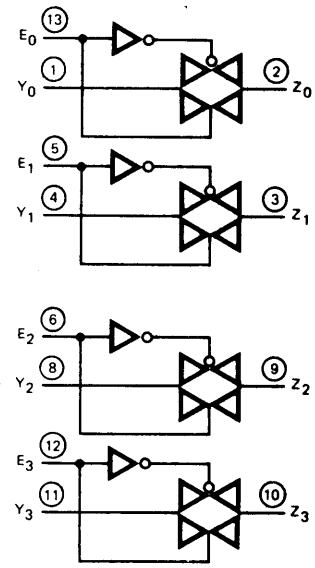

V_{DD} = Pin 14
V_{SS} = Pin 7

E_0-E_3	Enable Inputs
Y_0-Y_3	Input/Output Terminals
Z_0-Z_3	Input/Output Terminals

ECG4017B — Fig. 356

Decade Counter/Divider

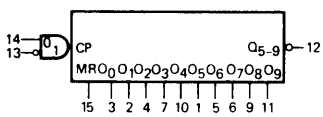

V_{DD} = Pin 16
V_{SS} = Pin 8

CP_0	Clock Input (L → H Triggered)
$\overline{CP_1}$	Clock Input (H → L Triggered)
MR	Master Reset Input
O_0-O_9	Decoded Outputs
Q_{5-9}	Carry Output (Active LOW)

ECG4018B — Fig. 356

Presettable Divide-by-"N" Counter

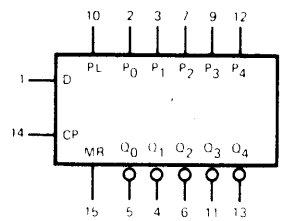

V_{DD} = Pin 16
V_{SS} = Pin 8

PL	Parallel Load Input
P_0–P_4	Parallel Inputs
D	Data Input
CP	Clock Input (L→H Edge-Triggered)
MR	Master Reset Input
$\overline{Q}_0$–$\overline{Q}_4$	Buffered Outputs (Active LOW)

ECG4019B — Fig. 356

Quad AND/OR Select Gate

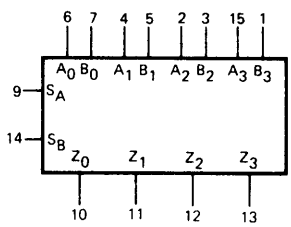

V_{DD} = Pin 16
V_{SS} = Pin 8

S_A, S_B	Select Inputs (Active HIGH)
A_0-A_3, B_0-B_3	Multiplexer Inputs
Z_0-Z_3	Multiplexer Outputs

ECG4020B — Fig. 356

14-Stage Binary/Ripple Counter

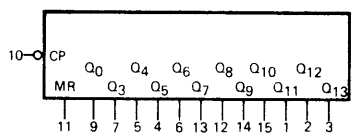

V_{DD} = Pin 16
V_{SS} = Pin 8

$\overline{CP}$	Clock Input (H → L Triggered)
MR	Master Reset Input (Active HIGH)
Q_0, Q_3-Q_{13}	Parallel Outputs

ECG4021B — Fig. 356

8-Stage Serial to Parallel Shift Register

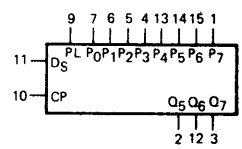

V_{DD} = Pin 16
V_{SS} = Pin 8

PL	Parallel Load Input
P_0-P_7	Parallel Data Inputs
D_S	Serial Data Input
CP	Clock Input (L → H Edge-Triggered)
Q_5-Q_7	Buffered Parallel Outputs from the Last Three Stages

ECG4022B — Fig. 356

Counter/Divider

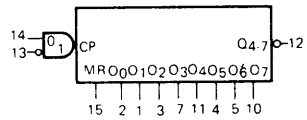

V_{DD} = Pin 16
V_{SS} = Pin 8
NC = Pin 6, 9

CP_0	Clock Input (L→H Edge-Triggered)
$\overline{CP_1}$	Clock Input (H→L Edge-Triggered)
MR	Master Reset Input
O_0–O_7	Decoded Outputs
$\overline{Q_{4-7}}$	Carry Output (Active LOW)

ECG4023B — Fig. 355

Triple 3-Input NAND Gate

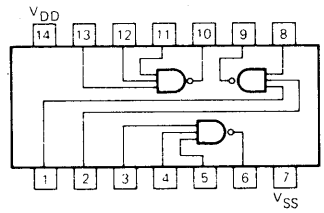

ECG4024B — Fig. 355

7-Stage Binary Counter

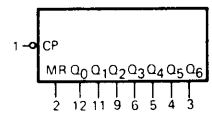

V_{DD} = Pin 14
V_{SS} = Pin 7
NC = Pins 8, 10 and 13

$\overline{CP}$	Clock Input (H → L Triggered)
MR	Master Reset Input
Q_0–Q_6	Buffered Parallel Outputs

ECG4025B — Fig. 355

Triple 3-Input NOR Gate

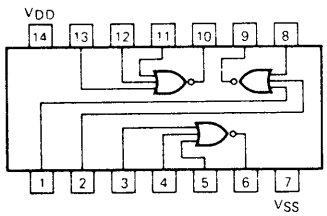

ECG4027B — Fig. 356

Dual J-K Master-Slave Flip-Flop

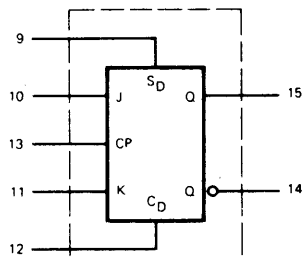

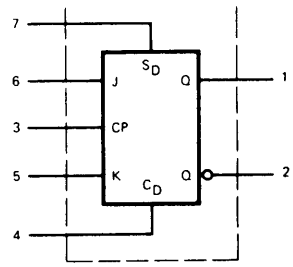

V_{DD} = Pin 16
V_{SS} = Pin 8

J, K	Synchronous Inputs
CP	Clock Input (L → H Edge-Triggered)
S_D	Asynchronous Direct Set Input (Active HIGH)
C_D	Asynchronous Direct Clear Input (Active HIGH)
Q	True Output
$\overline{Q}$	Complement Output

ECG4028B — Fig. 356

BCD-To-Decimal Decoder

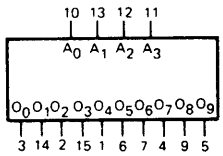

V_{DD} = Pin 16
V_{SS} = Pin 8

A_0–A_3	Address Inputs, 1-2-4-8 BCD
O_0–O_9	Outputs (Active HIGH)

ECG4029B — Fig. 356

Presettable Up/Down Counter

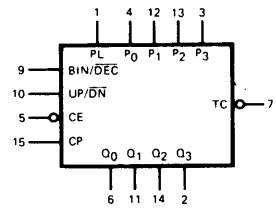

V_{DD} = Pin 16
V_{SS} = Pin 8

PL	Parallel Load Input
P_0–P_3	Parallel Data Inputs
BIN/$\overline{DEC}$	Binary/Decade Control Input
UP/$\overline{DN}$	Up/Down Control Input
$\overline{CE}$	Count Enable Input (Active LOW)
CP	Clock Input (L → H Edge-Triggered)
Q_0–Q_3	Buffered Parallel Outputs
$\overline{TC}$	Terminal Count Output (Active LOW)

ECG4030B — Fig. 355

Quad Exclusive OR Gate

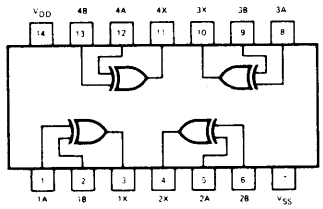

$X = \overline{A}B + A\overline{B}$

ECG4034B — Fig. 357

8-Stage Static BiDirectional Parallel/ Serial Input/Output Bus Register

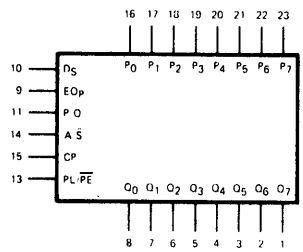

V_{DD} = Pin 24
V_{SS} = Pin 12

D_S	Serial Data Input
P_0-P_7	Parallel Data Inputs/Outputs
Q_0-Q_7	Parallel Data Inputs/Outputs
PL/$\overline{PE}$	Parallel Load/Parallel Enable Input
CP	Clock Input
A/$\overline{S}$	Asynchronous/Synchronous Mode Control Input
P/Q	Data Transfer Mode Control Input
EOp	Output Enable Input for Pn Parallel Data Inputs/Outputs

ECG4035B — Fig. 356

4-Stage Parallel In/Parallel Out Shift Register

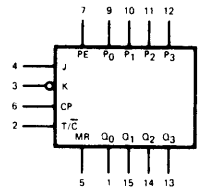

V_{DD} = Pin 16
V_{SS} = Pin 8

PE	Parallel Enable Input
P_0-P_3	Parallel Data Inputs
J	First Stage J Input (Active HIGH)
$\overline{K}$	First Stage K Input (Active LOW)
CP	Clock Input (L→H Edge-Triggered)
T/$\overline{C}$	True/Complement Input
MR	Master Reset Input
Q_0-Q_3	Buffered Parallel Outputs

ECG4040B — Fig. 356

12-Stage Binary/Ripple Counter

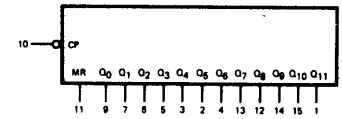

V_{DD} = Pin 16
V_{SS} = Pin 8

$\overline{CP}$	Clock Input (H→L Triggered)
MR	Master Reset Input (Active HIGH)
Q_0-Q_{11}	Parallel Outputs

ECG4042B — Fig. 356

Quad-Clocked "D" Latch

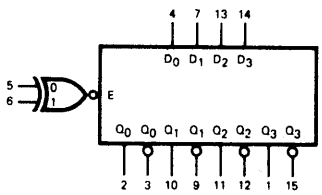

V_{DD} = Pin 16
V_{SS} = Pin 8

D_0-D_3	Data Inputs
E_0, E_1	Enable Inputs
Q_0-Q_3	Parallel Latch Outputs
$\overline{Q}_0$-$\overline{Q}_3$	Complementary Parallel Latch Outputs

ECG4043B — Fig. 356

Quad 3-State R/S Latch

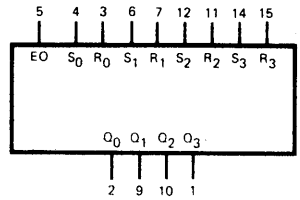

V_{DD} = Pin 16
V_{SS} = Pin 8
NC = Pin 13

EO	Common Output Enable Input
S_0–S_3	Set Inputs
R_0–R_3	Reset Inputs
Q_0–Q_3	3-State Buffered Latch Outputs

ECG4044B — Fig. 356

Quad 3-State R/S Latch

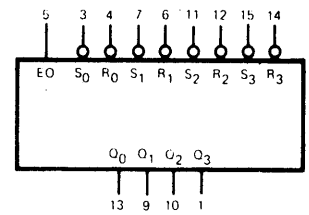

V_{DD} = Pin 16
V_{SS} = Pin 8
NC = Pin 2

EO	Output Enable Input
$\overline{S_0}$–$\overline{S_3}$	Set Inputs (Active LOW)
$\overline{R_0}$–$\overline{R_3}$	Reset Inputs (Active LOW)
Q_0–Q_3	3-State Buffered Latch Outputs

ECG4049B — Fig. 356

Hex Buffer/Converter (Inverting)

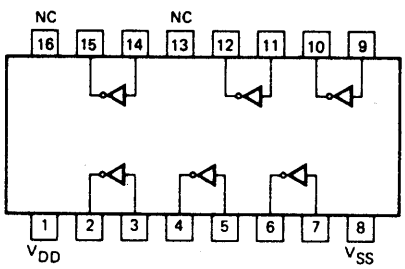

ECG4050B — Fig. 356

Hex Buffer/Converter (Non-Inverting)

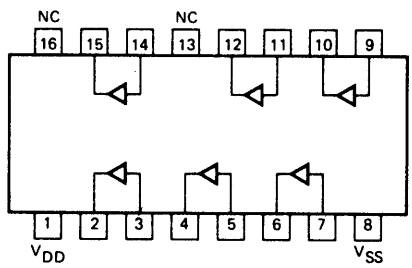

ECG4051B — Fig. 356

Single 8-Channel Multiplexer

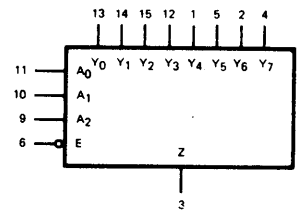

V_{DD} = Pin 16
V_{SS} = Pin 8
V_{EE} = Pin 7

Y_0-Y_7	Independent Inputs/Outputs
A_0-A_2	Address Inputs
$\overline{E}$	Enable Input (Active LOW)
Z	Common Input/Output

ECG4052B — Fig. 356

Differential 4-Channel Multiplexer

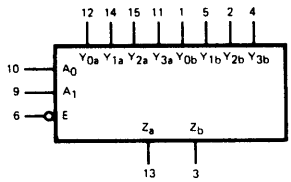

V_{DD} = Pin 16
V_{SS} = Pin 8
V_{EE} = Pin 7

Y_{0a}-Y_{3a}	Independent Inputs/Outputs
Y_{0b}-Y_{3b}	Independent Inputs/Outputs
A_0, A_1	Address Inputs
$\overline{E}$	Enable Input (Active LOW)
Z_a, Z_b	Common Input/Output

ECG4053B — Fig. 356

Analog Multiplexer Demultiplexer

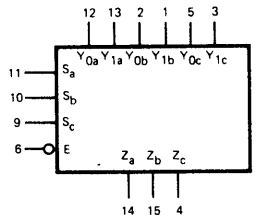

V_{DD} = Pin 16
V_{SS} = Pin 8
V_{EE} = Pin 7

Y_{0a}-Y_{0c}, Y_{1a}-Y_{1c}	Independent Input/Outputs
S_a-S_c	Select Inputs
$\overline{E}$	Enable Input (Active LOW)
Z_a-Z_c	Common Input/Outputs

ECG4055B — Fig. 356

BCD-7 Segment Decoder/Driver

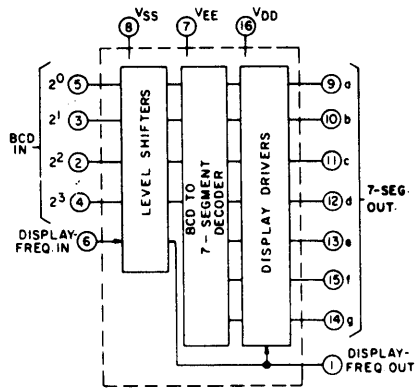

ECG4060B — Fig. 356

14-Stage Ripple-Carry Binary Counter/ Divider and Oscillator

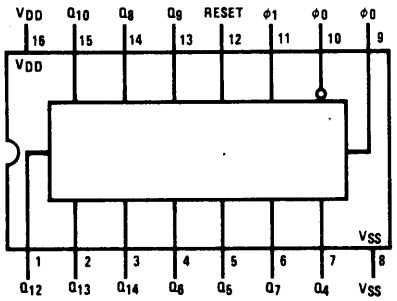

ECG4063B — Fig. 356

4-Bit Magnitude Comparator

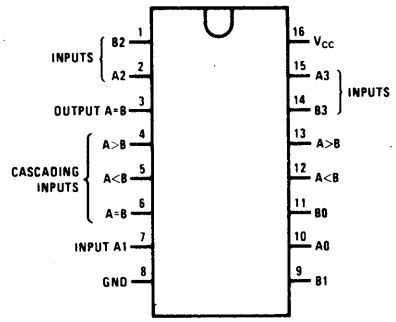

ECG4066B — Fig. 355

Quad Bilateral Switch

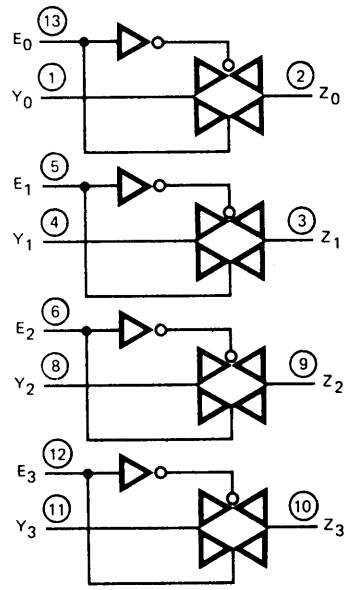

V_{DD} = Pin 14
V_{SS} = Pin 7

E_0 - E_3	Enable Inputs
Y_0 - Y_3	Input/Output Terminals
Z_0 - Z_3	Input/Output Terminals

ECG4068B — Fig. 355

8-Input NAND Gate

V_{DD} = Pin 14
V_{SS} = Pin 7
NC = Pins 1, 6, 8

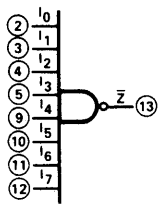

I_0-I_7	NAND Gate Inputs
$\overline{Z}$	Output (Active LOW)

ECG4069 — Fig. 355

Hex Inverter

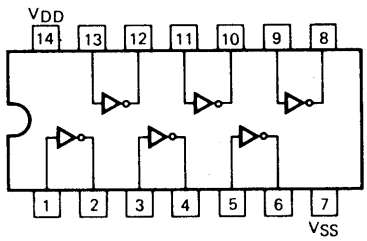

ECG4071B — Fig. 355

Quad 2-Input OR Gate

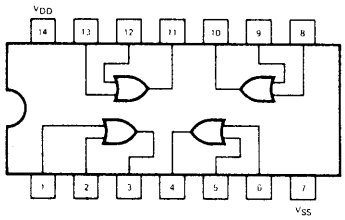

ECG4072B — Fig. 355

OR Gate

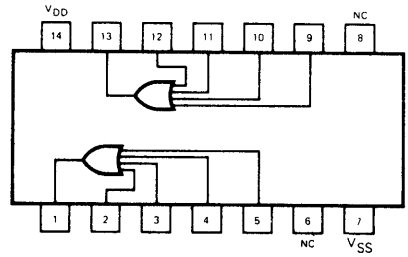

ECG4073B — Fig. 355

AND Gate

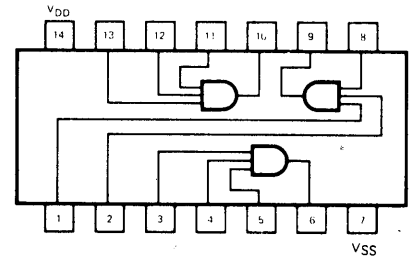

ECG4075B — Fig. 355

OR Gate

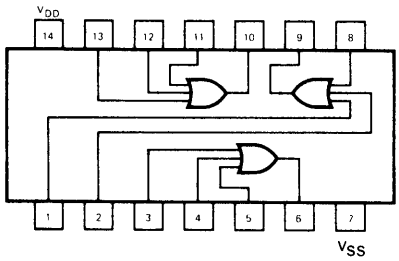

ECG4076B — Fig. 356

4-Bit "D" Type Register

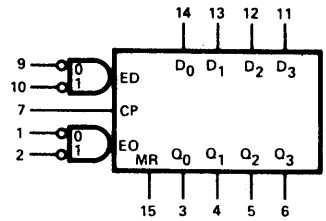

V_{DD} = Pin 16
V_{SS} = Pin 8

D_0-D_3	Data Inputs
$\overline{ED_0}$-$\overline{ED_1}$	Data Enable Inputs (Active LOW)
$\overline{EO_0}$, $\overline{ED_1}$	Output Enable Inputs (Active LOW)
CP	Clock Input (L → H Edge-Triggered)
MR	Master Reset Input
Q_0-Q_3	Data Outputs

ECG4077B — Fig. 355

Quad Exclusive NOR Gate

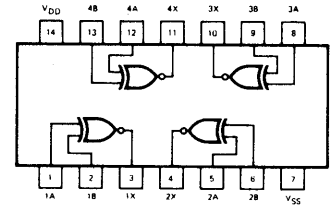

$X = AB + \overline{A}\overline{B}$

ECG4078B — Fig. 355

8-Input NOR Gate

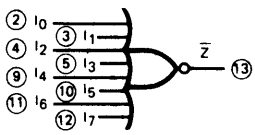

V_{DD} = Pin 14
V_{SS} = Pin 7
NC = Pins 1, 6, 8

I_0-I_7	NOR Gate Inputs
$\overline{Z}$	Output (Active LOW)

ECG4081B — Fig. 355

2-Input AND Gate

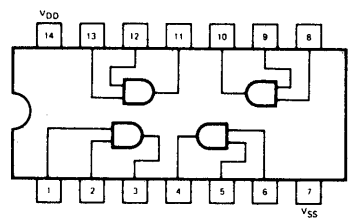

ECG4082B — Fig. 355

AND Gate

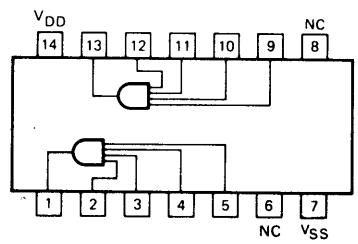

ECG4085B — Fig. 355

Dual 2-Wide 2-Input AND/OR Invert Gate

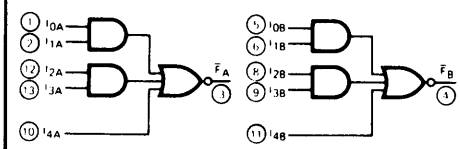

V_{DD} = Pin 14
V_{SS} = Pin 7

I_{0A}-I_{4A}, I_{0B}-I_{4B}	Gate Inputs
$\overline{F}_A$, $\overline{F}_B$	Outputs (Active LOW)

ECG4086B — Fig. 355

Expandable 4-Wide 2-Input AND/OR Invert Gate

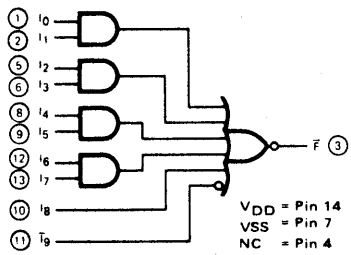

I_0-I_8	Gate Inputs
$\overline{I}_9$	Gate Input (Active LOW)
$\overline{F}$	Output (Active LOW)

ECG4093B — Fig. 355

Quad 2-Input NAND Schmitt Trigger

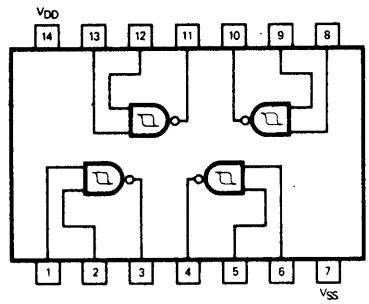

ECG4098B — Fig. 356

Dual Monostable Multivibrator

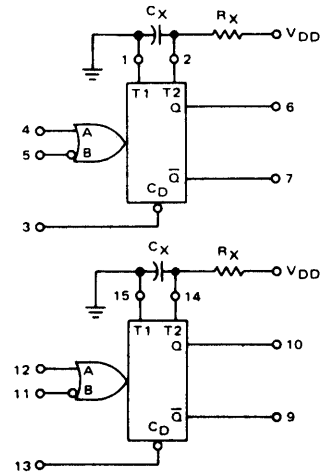

R_X and C_X are external components.

V_{DD} = Pin 16
V_{SS} = Pin 8

ECG4099B — Fig. 356

8-Bit Addressable Latch

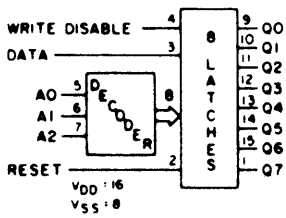

ECG4510B — Fig. 356

Presettable Up/Down Counter

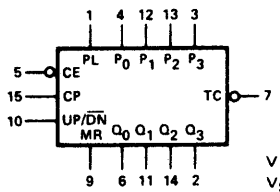

V_{DD} = Pin 16
V_{SS} = Pin 8

PL	Parallel Load Input (Active HIGH)
P_0-P_3	Parallel Inputs
$\overline{CE}$	Count Enable Input (Active LOW)
CP	Clock Pulse Input (L → H Edge-Triggered)
Up/$\overline{Dn}$	Up/Down Count Control Input
MR	Master Reset Input
$\overline{TC}$	Terminal Count Output (Active LOW)
Q_0-Q_3	Parallel Outputs

ECG4511B — Fig. 356

BCD-To-7 Segment Latch Decoder Driver

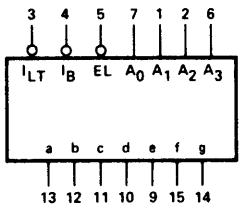

V_{DD} = Pin 16
V_{SS} = Pin 8

A_0-A_3	Address (Data) Inputs
$\overline{EL}$	Latch Enable Input (Active LOW)
$\overline{I_B}$	Blanking Input (Active LOW)
$\overline{I_{LT}}$	Lamp Test Input (Active LOW)
a-g	Segment Outputs

ECG4512B — Fig. 356

8-Input Multiplexer with 3-Stage Outputs

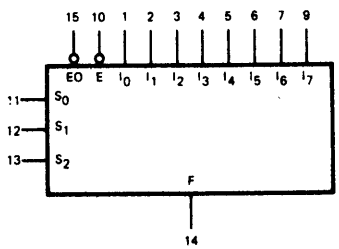

V_{DD} = Pin 16
V_{SS} = Pin 8

S_0,S_1,S_2	Select Inputs
$\overline{EO}$	Output Enable (Active LOW)
$\overline{E}$	Enable (Active LOW)
I_0 to I_7	Multiplexer Inputs
F	Multiplexer Output

ECG4514B — Fig. 357

4-Bit Latch/4-to-16 Line Decoder

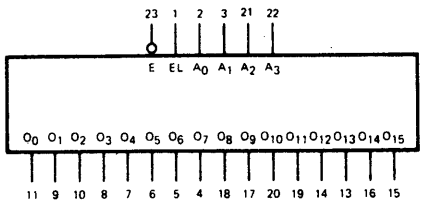

V_{DD} = Pin 24
V_{SS} = Pin 12

A_0-A_3	Address Inputs
$\overline{E}$	Enable Input (Active LOW)
EL	Latch Enable Input
O_0-O_{15}	Outputs

ECG4515B — Fig. 357

4-Bit Latch/4-to-16 Line Decoder

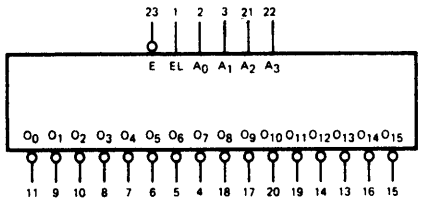

V_{DD} = Pin 24
V_{SS} = Pin 12

A_0-A_3	Address Inputs
$\overline{E}$	Enable Input (Active LOW)
EL	Latch Enable Input
$\overline{O_0}$-$\overline{O_{15}}$	Outputs (Active LOW)

ECG4516B — Fig. 356

Presettable Up/Down Counter

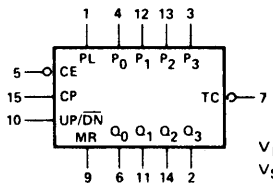

V_{DD} = Pin 16
V_{SS} = Pin 8

PL	Parallel Load Input (Active HIGH)
P_0-P_3	Parallel Inputs
$\overline{CE}$	Count Enable Input (Active LOW)
CP	Clock Pulse Input (L→H Edge-Triggered)
Up/$\overline{Dn}$	Up/Down Count Control Input
MR	Master Reset Input
$\overline{TC}$	Terminal Count Output (Active LOW)
Q_0-Q_3	Parallel Outputs

ECG4518B — Fig. 356

Dual BCD Up Counter

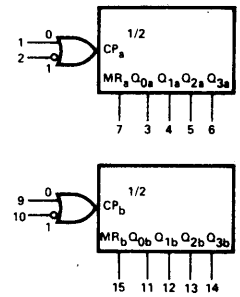

V_{DD} = Pin 16
V_{SS} = Pin 8

CP_{0a}, CP_{0b}	Clock Input (L→H Triggered)
$\overline{CP}_{1a}$, $\overline{CP}_{1b}$	Clock Input (H→L Triggered)
MR_a, MR_b	Master Reset Inputs
Q_{0a}-Q_{3a}	Outputs
Q_{0b}-Q_{3b}	Outputs

ECG4520B — Fig. 356

Dual Binary Up Counter

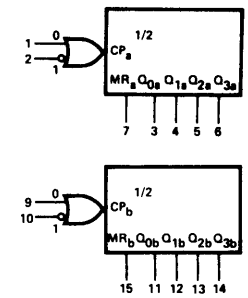

V_{DD} = Pin 16
V_{SS} = Pin 8

CP_{0a}, CP_{0b}	Clock Input (L→H Triggered)
$\overline{CP}_{1a}$, $\overline{CP}_{1b}$	Clock Input (H→L Triggered)
MR_a, MR_b	Master Reset Inputs
Q_{0a}-Q_{3a}	Outputs
Q_{0b}-Q_{3b}	Outputs

ECG4522B — Fig. 356

BCD-Programmable Divide-by-"N", 4-Bit Counter

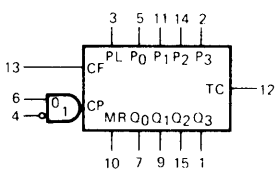

V_{DD} = Pin 16
V_{SS} = Pin 8

PL	Parallel Load Input
P_0-P_3	Parallel Inputs
CF	Carry Forward Input
CP_0	Clock Input (L→H Edge-Triggered)
$\overline{CP}_1$	Clock Input (H→L Edge-Triggered)
MR	Asynchronous Master Reset Input
TC	TC Terminal Count Output
Q_0-Q_3	Buffered Outputs

ECG4527B — Fig. 356

BCD Multiplier

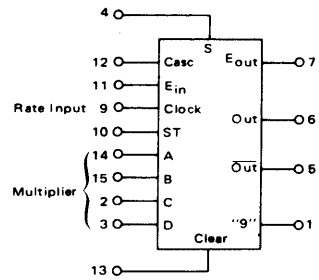

V_{DD} = Pin 16
V_{SS} = Pin 8

ECG4539B — Fig. 356

Dual 4-Channel Digital Mixer

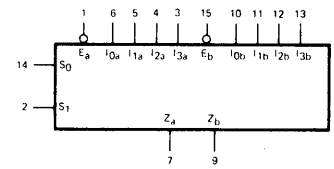

V_{DD} = Pin 16
V_{SS} = Pin 8

I_{0a}, I_{1a}, I_{2a}, I_{3a}	Multiplexer Inputs
I_{0b}, I_{1b}, I_{2b}, I_{3b}	Multiplexer Inputs
S_0, S_1	Select Inputs
$\overline{E}_a$, $\overline{E}_b$	Enable Inputs (Active LOW)
Z_a, Z_b	Multiplexer Outputs

ECG4555B — Fig. 356

Dual Binary to 1-of-4 Decoder/Demultiplexer (High-on-Select)

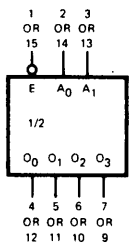

V_{DD} = Pin 16
V_{SS} = Pin 8

$\overline{E}$	Enable Input (Active LOW)
A_0, A_1	Address Inputs
O_0-O_3	Outputs (Active HIGH)

ECG4556B — Fig. 356

Dual Binary to 1-of-4 Decoder/Demultiplexer (Low-on-Select)

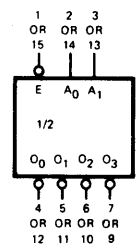

V_{DD} = Pin 16
V_{SS} = Pin 8

$\overline{E}$	Enable Input (Active LOW)
A_0, A_1	Address Inputs
$\overline{O}_0$-$\overline{O}_3$	Outputs (Active LOW)

ECG40085B — Fig. 356

4-Bit Magnitude Comparator

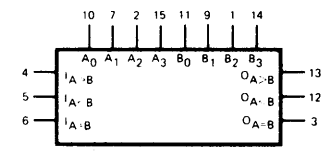

V_{DD} = Pin 16
V_{SS} = Pin 8

A_0-A_3	Word A Parallel Inputs
B_0-B_3	Word B Parallel Inputs
$I_{A>B}$, $I_{A<B}$, $I_{A=B}$	Expander Inputs
$O_{A>B}$	A Greater Than B Output
$O_{A<B}$	A Less Than B Output
$O_{A=B}$	A Equal to B Output

ECG40097B — Fig. 356

Hex 3-State Non-Inverting Buffer

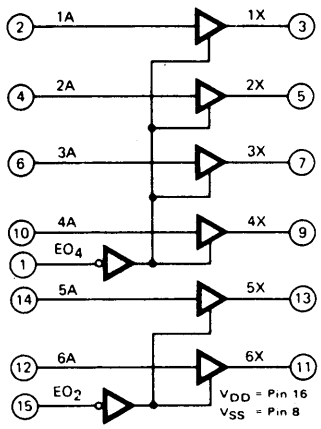

1A–6A	Buffer Inputs
$\overline{EO_4}$, $\overline{EO_2}$	Enable Inputs (Active LOW)
1X–6X	Buffer Outputs (Active HIGH)

ECG40098B — Fig. 356

Hex 3-State Inverting Buffer

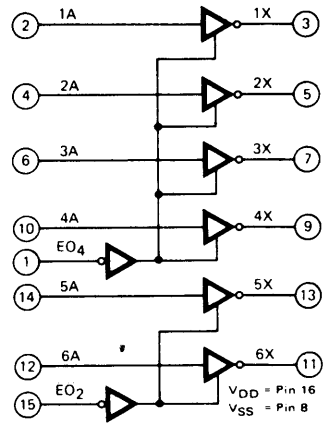

1A–6A	Buffer Inputs
$\overline{EO_4}$, $\overline{EO_2}$	Enable Inputs (Active LOW)
1X–6X	Buffer Outputs (Active LOW)

ECG40100B — Fig. 356

32-State Static Left/Right Shift Register

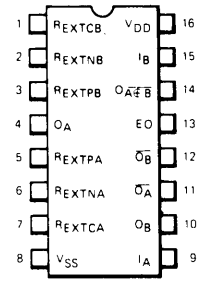

I_A, I_B	Schmitt Trigger Inputs
EO	Output Enable Input
R_{EXTPA}, R_{EXTPB}	Positive External Resistor Connections
R_{EXTNA}, R_{EXTNB}	Negative External Resistor Connections
R_{EXTCA}, R_{EXTCB}	Common External Resistor Connections
O_A, O_B	True Outputs
$\overline{O_A}$, $\overline{O_B}$	Complementary Outputs
$O_{\overline{A \oplus B}}$	Exclusive NOR Output

ECG40106B — Fig. 355

Hex Schmitt Trigger

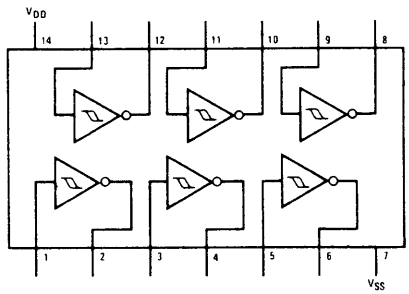

ECG40160B — Fig. 356

4-Bit Decade Asynchronous Reset Counter

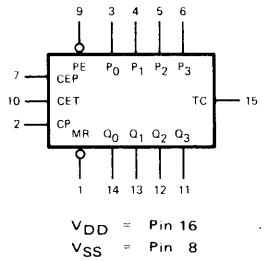

$\overline{PE}$	Parallel Enable Input (Active LOW)
P_0–P_3	Parallel Inputs
CEP	Count Enable Parallel Input
CET	Count Enable Trickle Input
$\overline{CP}$	Clock Input (L → H Edge-Triggered)
$\overline{MR}$	Master Reset Input (Active LOW)
Q_0–Q_3	Parallel Outputs
TC	Terminal Count Output

ECG40161B — Fig. 356

4-Bit Binary Asynchronous Reset Counter

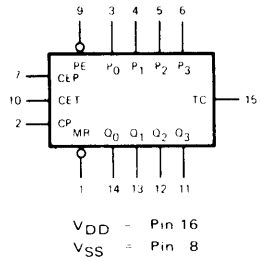

$\overline{PE}$	Parallel Enable Input (Active LOW)
P_0–P_3	Parallel Inputs
CEP	Count Enable Parallel Input
CET	Count Enable Trickle Input
$\overline{CP}$	Clock Input (L → H Edge-Triggered)
$\overline{MR}$	Master Reset Input (Active LOW)
Q_0–Q_3	Parallel Outputs
TC	Terminal Count Output

ECG40162B — Fig. 356

4-Bit Decade Synchronous Reset Counter

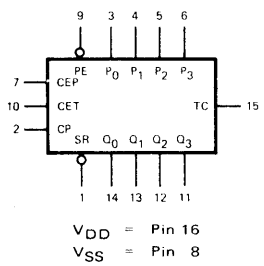

$\overline{PE}$	Parallel Enable Input (Active LOW)
P_0–P_3	Parallel Inputs
CEP	Count Enable Parallel Input
CET	Count Enable Trickle Input
$\overline{CP}$	Clock Input (L → H Edge-Triggered)
$\overline{SR}$	Synchronous Reset Input (Active LOW)
Q_0–Q_3	Parallel Outputs
TC	Terminal Count Output

ECG40163B — Fig. 356

4-Bit Binary Synchronous Reset Counter

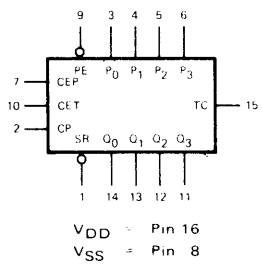

$\overline{PE}$	Parallel Enable Input (Active LOW)
P_0–P_3	Parallel Inputs
CEP	Count Enable Parallel Input
CET	Count Enable Trickle Input
$\overline{CP}$	Clock Input (L → H Edge-Triggered)
$\overline{SR}$	Synchronous Reset Input (Active LOW)
Q_0–Q_3	Parallel Outputs
TC	Terminal Count Output

ECG40174B — Fig. 356

Hex "D" Flip-Flop

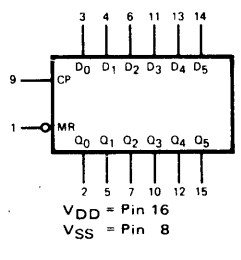

D_0–D_5	Data Inputs
$\overline{CP}$	Clock Input (L → H Edge-Triggered)
$\overline{MR}$	Master Reset Input (Active LOW)
Q_0–Q_5	Buffered Outputs from the Flip-Flops

CMOS (cont'd)

ECG40175B — Fig. 356

Quad "D" Flip-Flop

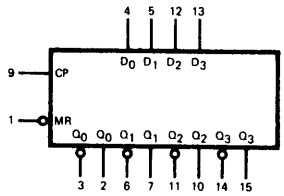

V_{DD} = Pin 16
V_{SS} = Pin 8

D_0-D_3	Data Inputs
$\overline{CP}$	Clock Input (L ➔H Edge-Triggered)
$\overline{MR}$	Master Reset Input (Active LOW)
Q_0-Q_3	Buffered Outputs from the Flip-Flops
$\overline{Q}_0$-$\overline{Q}_3$	Complimentary Buffered Outputs from the Flip-Flops

ECG40182B — Fig. 356

Look-Ahead Carry Generator

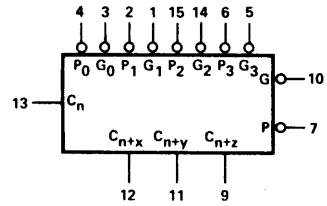

V_{DD} = Pin 16
V_{SS} = Pin 8

C_n	Carry Input
$\overline{G}_0$-$\overline{G}_3$	Carry Generate Inputs (Active LOW)
$\overline{P}_0$-$\overline{P}_3$	Carry Propagate Inputs (Active LOW)
C_{n+x},C_{n+y},C_{n+z}	Carry Outputs
$\overline{G}$	Carry Generate Output (Active LOW)
$\overline{P}$	Carry Propagate Output (Active LOW)

ECG40192B — Fig. 356

4-Bit Up/Down Synchronous Decade Counter

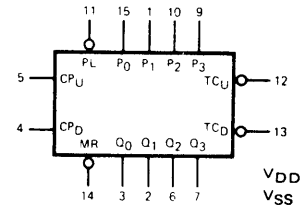

V_{DD} = Pin 16
V_{SS} = Pin 8

$\overline{PL}$	Parallel Load Input (Active LOW)
P_0-P_3	Parallel Data Inputs
CP_U	Count Up Clock Pulse Input (L ➔H Edge-Triggered)
CP_D	Count Down Clock Pulse Input (L ➔H Edge-Triggered)
MR	Master Reset Input (Asynchronous)
Q_0-Q_3	Buffered Counter Outputs
$\overline{TC_U}$	Buffered Terminal Count Up (Carry) Output (Active LOW)
$\overline{TC_D}$	Buffered Terminal Count Down (Borrow) Output (Active LOW)

ECG40193B — Fig. 356

4-Bit Up/Down Synchronous Binary Counter

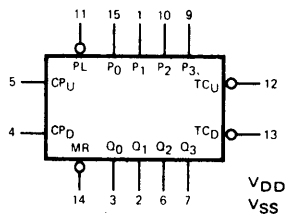

V_{DD} = Pin 16
V_{SS} = Pin 8

$\overline{PL}$	Parallel Load Input (Active LOW)
P_0-P_3	Parallel Data Inputs
CP_U	Count Up Clock Pulse Input (L ➔H Edge-Triggered)
CP_D	Count Down Clock Pulse Input (L ➔H Edge-Triggered)
MR	Master Reset Input (Asynchronous)
Q_0-Q_3	Buffered Counter Outputs
$\overline{TC_U}$	Buffered Terminal Count Up (Carry) Output (Active LOW)
$\overline{TC_D}$	Buffered Terminal Count Down (Borrow) Output (Active LOW)

ECG40194B — Fig. 356

4-Bit Right/Left Shift Register

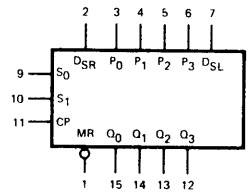

V_{DD} = Pin 16
V_{SS} = Pin 8

S_0,S_1	Mode Control Inputs
P_0-P_3	Parallel Data Inputs
D_{SR}	Serial (Shift Right) Data Input
D_{SL}	Serial (Shift Left) Data Input
$\overline{CP}$	Clock Input (L ➔H Edge-Triggered)
$\overline{MR}$	Master Reset Input (Active LOW)
Q_0-Q_3	Parallel Outputs

ECG40195B — Fig. 356

4-Bit Shift Register

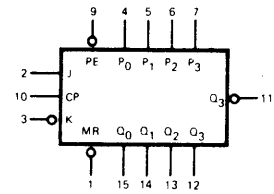

V_{DD} = Pin 16
V_{SS} = Pin 8

$\overline{PE}$	Parallel Enable Input (Active LOW)
P_0-P_3	Parallel Data Inputs
$\overline{J}$	First Stage J Input (Active HIGH)
$\overline{K}$	First Stage K Input (Active LOW)
$\overline{CP}$	Clock Input (L ➔H Edge-Triggered)
$\overline{MR}$	Master Reset Input (Active LOW)
Q_0-Q_3	Parallel Outputs
$\overline{Q}_3$	Complementary Last Stage Output

CMOS Outlines

Fig. 355

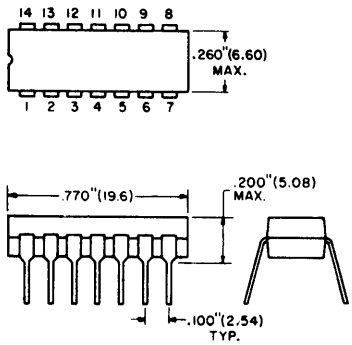

Fig. 356

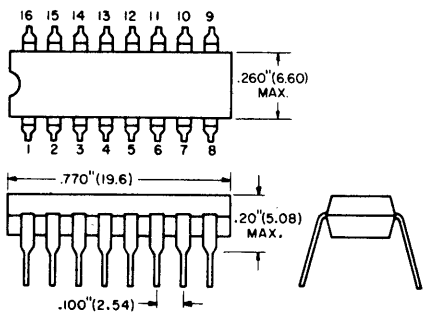

Fig. 357

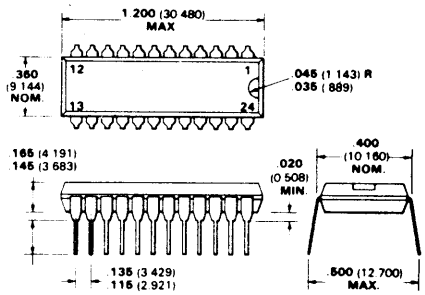

Dual inline plastic cases may have a round indentation on top surface for indexing in place of notched edge.

TTL Transistor-Transistor Logic (Includes 74C CMOS Series)

ECG No.	Description	Logic Diag. No.	Package Fig. No.
7400	Quad 2-Input Pos NAND Gate	L1	361
74C00	CMOS, Quad 2-Input NAND Gate	L1	361
74H00	Hi Speed Quad 2-Input Pos NAND Gate	L1	361
74LS00	Lo Pwr Schottky Quad 2-Input Pos NAND Gate	L1	361
74S00	Ultra-Hi Speed Quad 2-Input Pos NAND Gate	L1	361
7401	Quad 2-Input Pos NAND Gate with Open Collector Output	L2	361
74H01	Hi Speed Quad 2-Input Pos NAND Gate with Open Collector Output	L3	361
7402	Quad 2-Input Pos NOR Gate	L4	361
74C02	CMOS, Quad 2-Input NOR Gate	L4	361
74LS02	Lo Pwr Schottky Quad 2-Input Pos NOR Gate	L4	361
74S02	Ultra-Hi Speed Quad 2-Input Pos NOR Gate	L4	361
7403	Quad 2-Input Pos NAND Gate with Open Collector Output	L5	361
74LS03	Lo Pwr Schottky Quad 2-Input Pos NAND Gate with Open Collector Output	L5	361
74S03	Ultra-Hi Speed Quad 2-Input Pos NAND Gate with Open Collector Output	L5	361
7404	Hex Inverter	L6	361
74C04	CMOS, Hex Inverter	L6	361
74H04	Hi Speed Hex Inverter	L6	361
74LS04	Lo Pwr Schottky Hex Inverter	L6	361
74S04	Ultra-Hi Speed Hex Inverter	L6	361
7405	Hex Inverter with Open Collector Output	L6	361
74H05	Hi Speed Hex Inverter with Open Collector Output	L6	361
74LS05	Lo Pwr Schottky Hex Inverter with Open Collector Output	L6	361
74S05	Ultra-Hi Speed Hex Inverter with Open Collector Output	L6	361
7406	Hex Inverter Buffer/Driver with Open Collector Hi Voltage Output (30V)	L6	361
7407	Hex Buffer/Driver with Open Collector Hi Voltage Output (30V)	L7	361
7408	Quad 2-Input Pos AND Gate	L8	361
74C08	CMOS, Quad 2-Input AND Gate	L8	361
74H08	Hi Speed Quad 2-Input Pos AND Gate	L8	361
74LS08	Lo Pwr Schottky Quad 2-Input Pos AND Gate	L8	361
74S08	Ultra-Hi Speed Quad 2-Input Pos AND Gate	L8	361
7409	Quad 2-Input Pos AND Gate with Open Collector Output	L8	361
74S09	Ultra-Hi Speed Quad 2-Input Pos AND Gate with Open Collector Output	L8	361
7410	Triple 3-Input Pos NAND Gate	L9	361
74C10	CMOS, Triple 3-Input NAND Gate	L9	361
74H10	Hi Speed Triple 3-Input Pos NAND Gate	L9	361
74LS10	Lo Pwr Schottky Triple 3-Input Pos NAND Gate	L9	361
74S10	Ultra-Hi Speed Triple 3-Input Pos NAND Gate	L9	361
7411	Triple 3-Input Pos AND Gate	L10	361
74H11	Hi Speed Triple 3-Input Pos AND Gate	L10	361
74LS11	Lo Pwr Schottky Triple 3-Input Pos AND Gate	L10	361
74S11	Ultra-Hi Speed Triple 3-Input Pos AND Gate	L10	361
7412	Triple 3-Input Pos NAND Gate with Open Collector Output	L11	361
7413	Dual NAND Schmitt Trigger	L12	361
7414	Hex Schmitt Trigger	L13	361
74C14	CMOS, Hex Schmitt Trigger	L13	361
74LS14	Lo Pwr Schottky Hex Schmitt Trigger	L13	361
74S15	Ultra-Hi Speed Triple 3-Input Pos AND Gate with Open Collector Output	L14	361
7416	Hex Inverter Buffer/Driver with Open Collector Hi Voltage Output (15V)	L15	361

ECG No.	Description	Logic Diag. No.	Package Fig. No.
7417	Hex Buffer/Driver with Open Collector Hi Voltage Output (15V)	L16	361
7420	Dual 4-Input Pos NAND Gate	L17	361
74C20	CMOS, Dual 4-Input NAND Gate	L17	361
74H20	Hi Speed Dual 4-Input Pos NAND Gate	L17	361
74LS20	Lo Pwr Schottky Dual 4-Input Pos NAND Gate	L17	361
74S20	Ultra-Hi Speed Dual 4-Input Pos NAND Gate	L17	361
7421	Dual 4-Input AND Gate	L18	361
74H21	Hi Speed Dual 4-Input AND Gate	L18	361
7422	Dual 4-Input Pos NAND Gate	L19	361
74H22	Hi Speed Dual 4-Input Pos NAND Gate with Open Collector Output	L19	361
74S22	Ultra-Hi Speed Dual 4-Input Pos NAND Gate with Open Collector Output	L19	361
7423	Expandable Dual 4-Input Pos NOR Gate with Strobe	L20	362
7425	Dual 4-Input NOR Gate with Strobe	L21	361
7426	Quad 2-Input Hi Voltage Interface NAND Gate	L22	361
7427	Triple 3-Input Pos NOR Gate	L23	361
74LS27	Lo Pwr Schottky Triple 3-Input Pos NOR Gate	L23	361
7428	Quad 2-Input Pos NOR Buffer/Clock Driver with Totem Pole Output	L24	361
7430	8-Input Pos NAND Gate	L25	361
74H30	Hi Speed Single 8-Input Pos NAND Gate	L25	361
74LS30	Lo Pwr Schottky 8-Input Pos NAND Gate	L25	361
74S30	Ultra-Hi Speed Single 8-Input Pos NAND Gate	L25	361
7432	Quad 2-Input Pos OR Gate	L26	361
74LS32	Lo Pwr Schottky Quad 2-Input Pos OR Gate	L26	361
7433	Quad 2-Input Pos NOR Buffer with Open Collector Output	L27	361
7437	Quad 2-Input Pos NAND Buffer	L28	361
7438	Quad 2-Input Pos NAND Buffer with Open Collector Output	L28	361
74LS38	Lo Pwr Schottky Quad 2-Input Pos NAND Buffer with Open Collector Output	L28	361
7439	Quad 2-Input NAND Buffer with Open Collector Output	L29	361
7440	Dual 4-Input Pos NAND Buffer	L30	361
74H40	Hi Speed Dual 4-Input Pos NAND Buffer	L30	361
74S40	Ultra-Hi Speed Dual 4-Input Pos NAND Buffer	L30	361
7441	1-of-10 Decoder Driver for Cold Cathode Indicator Tubes	L31	362
7442	4-Line-to-10 Line Decoder (1-of-10) BCD-to-Decimal	L32	362
74C42	CMOS, BCD-to-Decimal Decoder	L32	362
74LS42	Lo Pwr Schottky 4-Line-to-10 Line Decoder (1-of-10) BCD-to-Decimal	L32	362
7443	4-Line-to-10 Line Decoder (1-of-10) Excess 3-to-Decimal	L32	362
7444	4-Line-to-10 Line Decoder (1-of-10) Excess 3-Gray-to-Decimal	L32	362
7445	BCD-to-Decimal Decoder/Driver (30V)	L32	362
7446	BCD-to-Seven-Segment Decoder/Driver (30V)	L33	362
7447	BCD-to-Seven-Segment Decoder/Driver (15V)	L33	362
7448	BCD-to-Seven-Segment Decoder/Driver	L33	362
74C48	CMOS, BCD-to-Seven Segment Decoder	L33	362
7450	Expandable Dual 2-Wide 2-Input AND/OR Invert Gate	L34	361
74H50	Hi Speed Dual AND/OR Gate Inverter/Expander	L34	361
7451	Expandable Dual 2-Wide 2-Input AND/OR Invert Gate	L35	361
74H51	Hi Speed Dual 2-Input AND/OR Invert Gate	L35	361

TTL (cont'd)

ECG No.	Description	Logic Diag. No.	Package Fig. No.
74LS51	Lo Pwr Schottky Dual AND/OR Invert Gate	L36	361
74S51	Ultra-Hi Speed Expandable Dual 2-Wide 2-Input AND/OR Invert Gate	L37	361
74H52	Hi Speed 2-2-2-3 Input AND/OR Gate	L38	361
7453	Expandable 4-Wide 2-Input AND/OR Invert Gate	L39	361
74H53	Hi Speed Expandable 2-2-2-3 Input AND/OR Invert Gate	L40	361
7454	Expandable 4-Wide 2-Input AND/OR Invert Gate	L41	361
74H54	Hi Speed 2-2-2-3 Input AND/OR Invert Gate	L42	361
74H55	Hi Speed 2-Wide 4-Input AND/OR Invert Gate	L43	361
7460	Dual 4-Input Expander	L44	361
74H60	Hi Speed Dual 4-Input Expander	L44	361
74H61	Hi Speed Triple 3-Input Expander	L45	361
74H62	Hi Speed 3-2-2-3 Input AND/OR Expander	L46	361
74S64	Ultra-Hi Speed 4-2-3-2 Input AND/OR Invert Gate	L47	361
74S65	Ultra-Hi Speed 4-2-3-2 Input AND/OR Invert Gate with Open Collector Output	L47	361
7470	J-K Pos Edge Triggered Flip-Flop with Preset and Clear	L48	361
74H71	Hi Speed J-K M/S Flip-Flop with AND/OR Gate Inputs	L49	361
7472	J-K M/S Flip-Flop with Preset and Clear	L50	361
74H72	J-K M/S Flip-Flop with AND Gate Inputs	L50	361
7473	Dual J-K M/S Flip-Flop	L51	361
74C73	CMOS, Dual J-K Flip-Flop with Clear	L51	361
74H73	Hi Speed J-K M/S Flip-Flop with Separate Clears and Clocks	L51	361
74LS73	Lo Pwr Schottky Dual J-K Flip-Flop	L51	361
7474	Dual "D Type" Edge Triggered Flip-Flop	L52	361
74C74	CMOS, Dual "D Type" Flip-Flop	L52	361
74H74	Hi Speed Dual "D Type" Edge Triggered Flip-Flop	L52	361
74LS74A	Lo Pwr Schottky Dual "D Type" Flip-Flop	L52	361
74S74	Ultra-Hi Speed Dual "D Type" Edge Triggered Flip-Flop	L52	361
7475	4-Bit Bistable Latch	L53	362
74LS75	Lo Pwr Schottky 4-Bit Bistable Latch	L53	362
7476	Dual J-K M/S Flip-Flop with Preset and Clear	L54	362
74C76	CMOS, Dual J-K Flip-Flop with Clear and Preset	L54	362
74H76	Hi Speed Dual J-K M/S Flip-Flop with Separate Presets, Clears and Clocks	L54	362
74H78	Hi Speed Dual M/S Flip-Flop with Separate Presets, and a Common Clear and Clock	L55	361
7480	Gated Full Adder	L56	361
7481	16-Bit (16x1) RAM	L57	361
7482	2-Bit Binary Full Adder	L58	361
7483	4-Bit Binary Full Adder	L59	362
74LS83A	Lo Pwr Schottky 4-Bit Full Adder	L59	362
7485	4-Bit Magnitude Comparator	L60	362
74C85	CMOS, 4-Bit Magnitude Comparator	L60	362
74LS85	Lo Pwr Schottky 4-Bit Magnitude Comparator	L60	362
7486	Quad 2-Input Exclusive OR Gate	L61	361
74H86	Hi Speed Quad Exclusive OR Gate	L61	361
74LS86	Lo Pwr Schottky Quad Exclusive OR Gate	L61	361
74S86	Ultra-Hi Speed Quad 2-Input Exclusive OR Gate	L61	361
74H87	Hi Speed 4-Bit True/Complement-Zero/One Element	L62	361
7488A	256-Bit Read-Only Memory	L63	362
7489	64-Bit Read/Write Memory	L64	362
7490	Decade Counter (÷2; ÷5)	L65	361

ECG No.	Description	Logic Diag. No.	Package Fig. No.
74C90	CMOS, 4-Bit Decade Counter	L65	361
7491	8-Bit Shift Register	L66	361
7492	Divide-By-Twelve Counter (÷2; ÷6)	L67	361
7493A	4-Bit Binary Counter	L68	361
74C93	CMOS, 4-Bit Binary Counter	L68	361
74LS93	Lo Pwr Schottky 4-Bit Binary Counter	L68	361
7494	4-Bit Shift Register	L69	362
7495	4-Bit Right-Shift Left-Shift Register	L70	361
7496	5-Bit Shift Register	L71	362
7497	6-Bit Binary Multiplier (Synchronous Rate Multiplier)	L72	362
74H101	Hi Speed J-K Negative Edge Triggered Flip-Flop with AND/OR Inputs	L73	361
74H102	Hi Speed J-K Negative Edge Triggered Flip-Flop with AND Inputs	L74	361
74H103	Hi Speed J-K Negative Edge Triggered Flip-Flop with Separate Clears and Clocks	L75	361
74H106	Hi Speed Dual J-K Negative Edge Triggered Flip-Flop with Separate Presets, Clocks and Clears	L76	362
74107	Dual J-K M/S Flip-Flop with Clear	L77	361
74LS107	Lo Pwr Schottky Dual J-K Flip-Flop	L77	361
74H108	Hi Speed Dual J-K Negative Edge Triggered Flip-Flop with Separate Presets, and a Common Clear and Clock	L78	361
74109	Dual J-K Pos Edge Triggered Flip-Flop with Clear and Preset	L79	362
74LS109A	Lo Pwr Schottky Dual J-K Pos Edge Triggered Flip-Flop	L79	362
74110	Gated J-K M/S Flip-Flop with Clear and Preset	L80	361
74111	Dual J-K M/S Flip-Flop with Clear and Preset	L81	362
74S112	Ultra-Hi Speed Dual J-K Negative Edge Triggered Flip-Flop	L82	362
74S113	Ultra-Hi Speed Dual J-K Negative Edge Triggered Flip-Flop with Individual J, K Preset and Clock Inputs	L83	361
74S114	Ultra-Hi Speed Dual J-K Negative Edge Triggered Flip-Flop with Common Clock and Common Clear and Individual J, K and Preset Inputs	L84	361
74121	Monostable Multivibrators	L85	361
74122	Retriggerable Monostable Multivibrators with Clear and Internal Timing Resistor	L86	361
74123	Dual Retriggerable Monostable Multivibrators with Clear	L87	362
74LS123	Lo Pwr Schottky Dual Retriggerable Monostable Multivibrators	L87	362
74S124	Ultra-Hi Speed Dual Voltage Controlled Oscillator	L88	362
74125	Quad Buffer with 3-State Outputs Hi Disable	L89	361
74126	Quad Buffer with 3-State Outputs Lo Disable	L90	361
74128	Dual 4-Input Pos NAND 50/75 Ohm Line Drive	L91	361
74132	Schmitt Trigger Pos NAND Gate with Inverter with Totem Pole Output	L92	361
74S133	Ultra-Hi Speed 13-Input NAND Gate	L93	362
74S134	Ultra-Hi Speed 12-Input NAND Gate	L94	362
74LS136	Lo Pwr Schottky Quad Exclusive OR Gate with Open Collector Output	L95	361
74LS138	Lo Pwr Schottky 1-of-8 Decoder/Demultiplexer	L96	362
74S138	Ultra-Hi Speed 3-Line-to-8-Line Decoder/Demultiplexer	L96	362
74S140	Ultra-Hi Speed Dual 4-Input NAND Line Driver	L97	361
74141	BCD-to-Decimal Decoder/Driver-Drives Gas Filled Cold Cathode Indicator Tubes Directly	L98	362
74145	BCD-to-Decimal Decoder/Driver	L99	362
74150	Data Selector/Multiplexer-Inverted Outputs	L100	364
74151	Data Selector/Multiplexer-Complementary Outputs	L101	362

TTL (cont'd)

ECG No.	Description	Logic Diag. No.	Package Fig. No.
74C151	CMOS, 8-Channel Digital Multiplexer	L101	362
74LS151	Lo Pwr Schottky 8-Input Multiplexer	L101	362
74S151	Ultra-Hi Speed 8-Input Data Selector/ Multiplexer with Complementary Outputs	L101	362
74152	Data Selector/Multiplexer	L102	361
74153	Dual 4-Line-to-1-Line Data Selector/ Multiplexer	L103	362
74LS153	Lo Pwr Schottky Dual 4-Input Multiplexer	L103	362
74S153	Ultra-Hi Speed Dual 4-Line-to-1 Line Data Selector/Multiplexer	L103	362
74154	4-Line-to-16-Line Decoder/Multiplexer	L104	364
74C154	CMOS, 4-Line-to-16-Line Decoder/ Demultiplexer	L104	364
74155	Dual 2-Line-to-4-Line Decoder/ Demultiplexer Totem Pole Outputs	L105	362
74156	Dual 2-Line-to-4-Line Decoder/ Demultiplexer Open Collector Output	L105	362
74C157	CMOS, Quad 2-Input Multiplexer	L106	362
74LS157	Lo Pwr Schottky Quad 2-Input Multi-plexer Non-Inverting	L106	362
74S157	Ultra-Hi Speed Quad 2-Line-to-1-Line Data Selector/Multiplexer with True Data Outputs	L106	362
74S158	Ultra-Hi Speed Quad 2-Line-to-1-Line Data Selector/Multiplexer with Inverted Data Output	L106	362
74160	Synchronous Decade Counter with Direct Clear	L107	362
74161	Synchronous Binary Counter with Direct Clear	L107	362
74C161	CMOS, Binary Counter with Asyn-chronous Clear	L107	362
74LS161A	Lo Pwr Schottky 4-Bit Binary Counter Asynchronous Reset	L107	362
74162	Decade Counter with Synchronous Clear	L107	362
74163	Binary Counter with Synchronous Clear	L107	362
74LS163A	Lo Pwr Schottky 4-Bit Binary Counter Synchronous Reset	L107	362
74164	8-Bit Parallel-Out Serial Shift Register	L108	361
74C164	CMOS, 8-Bit Parallel-Out Serial Shift Register	L108	361
74LS164	Lo Pwr Schottky 8-Bit Shift Register Serial In-Parallel Out	L108	361
74165	Parallel-Load 8-Bit Shift Register	L109	362
74166	8-Bit Parallel or Serial In-Serial Out Shift Register	L110	362
74170	4-By-4 Register File	L111	362
74C173	CMOS, Quad "D Type" Flip-Flop	L112	362
74174	Hex "D Type" Flip-Flop with Clear and Single Rail Outputs	L113	362
74C174	CMOS, Hex "D Type" Flip-Flop	L113	362
74LS174	Lo Pwr Schottky Hex "D Type" Flip-Flop with Clear	L113	362
74S174	Ultra-Hi Speed Hex "D Type" Flip-Flop with Clear	L113	362
74175	Quad "D Type" Flip-Flop with Clear and Double Rail Outputs	L114	362
74C175	CMOS, Quad "D Type" Flip-Flop	L114	362
74LS175	Lo Pwr Schottky Quad "D Type" Flip-Flop with Clear	L114	362
74S175	Ultra-Hi Speed Quad "D Type" Flip-Flop with Clear	L114	362
74176	Decade Counter (Can be connected in BCD, ÷2, ÷5, or Biquinary Mode)	L115	361
74177	4-Bit Binary Counter (Can be connected as ÷2, ÷8, or ÷16 Counter)	L115	361
74178	4-Bit Shift Register with Serial and Parallel Data Entry	L116	361
74179	4-Bit Shift Register with Serial and Parallel Data Entry Plus Direct Reset (RD) and a D (Out) Line	L117	362
74180	8-Bit Odd/Even Parity Generator/ Checker	L118	361

ECG No.	Description	Logic Diag. No.	Package Fig. No.
74181	Arithmetic Logic Unit/Function Generator	L119	364
74S181	Ultra-Hi Speed Arithmetic Logic Units/Function Generator	L119	364
74182	Look-Ahead Carry Generator	L120	362
74H183	Hi Speed Dual Carry/Save Full Adder	L121	361
74190	BCD-Synchronous Up/Down Counter with Up/Down Mode Control	L122	362
74191	4-Bit Binary Synchronous Up/Down Counter with Up/Down Mode Control	L122	362
74LS191	Lo Pwr Schottky Up/Down Binary Counter	L122	362
74192	Synchronous Up/Down Decade Counter-Dual Clock with Clear	L123	362
74C192	CMOS, Synchronous 4-Bit Up/Down Decade Counter	L123	362
74193	Synchronous Up/Down 4-Bit Binary Counter-Dual Clock with Clear	L123	362
74C193	CMOS, Synchronous 4-Bit Up/Down Binary Counter	L123	362
74LS193	Lo Pwr Schottky Up/Down Binary Counter	L123	362
74S194	Ultra-Hi Speed 4-Bit Bidirectional Universal Shift Register	L124	362
74195	4-Bit Parallel Access Shift Register	L125	362
74LS195A	Lo Pwr Schottky 4-Bit Shift Register	L125	362
74196	50 MHz Presettable Decade Counter and Latch (Can provide ÷2 and ÷5 Counter)	L126	361
74197	50 MHz Presettable Binary Counter and Latch (Can provide ÷2 and ÷8 Counter)	L126	361
74198	8-Bit Right-Left Shift Register (Parallel Inputs-Parallel Outputs)	L127	364
74199	Synchronous 8-Bit Register	L127	364
74C221	CMOS, Dual Monostable Multivibrator	L128	362
74LS221	Lo Pwr Schottky Dual Monostable Multivibrator Schmitt Trigger	L128	362
74LS240	Lo Pwr Schottky Octal 3-State Driver	L129	363
74LS241	Lo Pwr Schottky Octal 3-State Driver	L130	363
74LS242	Lo Pwr Schottky Quad Bus Transceiver	L131	361
74LS243	Lo Pwr Schottky Quad Bus Transceiver	L132	361
74LS244	Lo Pwr Schottky Octal 3-State Driver	L133	363
74S251	Ultra-Hi Speed 1-of-8 Multiplexer	L134	362
74LS253	Lo Pwr Schottky Dual 4-Input Multi-plexer 3-State	L135	362
74LS257	Lo Pwr Schottky Quad 2-Input Multi-plexer 3-State	L136	362
74S258	Ultra-Hi Speed Quad 2-Line-to-1-Line Data Selector/Multiplexer	L137	362
74LS259	Lo Pwr Schottky 8-Bit Addressable Latch	L138	362
74LS266	Lo Pwr Schottky Quad Exclusive NOR Gate with Open Collector Output	L139	361
74LS273	Lo Pwr Schottky Octal "D Type" Flip-Flop with Clear	L140	363
74LS280	Lo Pwr Schottky 9-Bit Odd/Even Parity Generator/Checker	L141	361
74LS298	Lo Pwr Schottky Quad 2-Input Multi-plexer with Output Latch	L142	362
74LS367	Lo Pwr Schottky Hex Buffer, 4-Bit and 2-Bit 3-State	L143	362
74LS377	Lo Pwr Schottky Octal "D Type" Flip-Flop with Enable	L144	363
74C925	CMOS, 4-Digit Counter with Multi-plexed 7-Segment Output Driver	L145	362
80C97	CMOS, Hex Non-Inverting Buffer	L146	362

TTL Logic Diagrams

Diag. L1 Outline-Fig. 361

ECG7400, ECG74C00, ECG74H00, ECG74LS00, ECG74S00

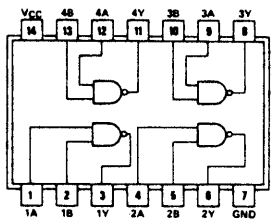

Diag. L2 Outline-Fig. 361

ECG7401

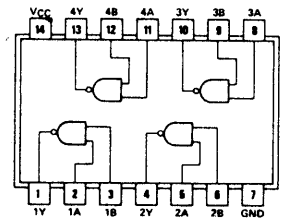

Diag. L3 Outline-Fig. 361

ECG74H01

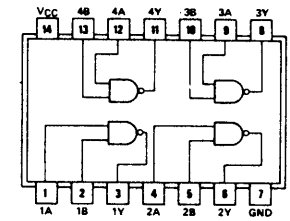

Diag. L4 Outline-Fig. 361

ECG7402, ECG74C02, ECG74LS02, ECG74S02

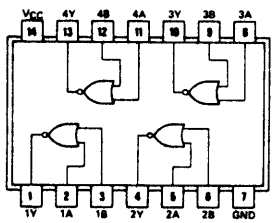

Diag. L5 Outline-Fig. 361

ECG7403, ECG74LS03, ECG74S03

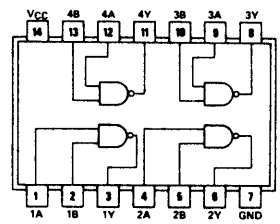

Diag. L6 Outline-Fig. 361

ECG7404, ECG74C04, ECG74H04, ECG74LS04, ECG74S04, ECG7405, ECG74H05, ECG74LS05, ECG74S05, ECG7406

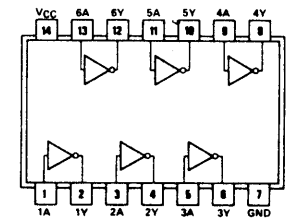

Diag. L7 Outline-Fig. 361

ECG7407

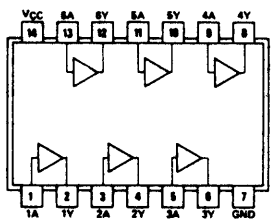

Diag. L8 Outline-Fig. 361

ECG7408, ECG74C08, ECG74H08, ECG74LS08, ECG74S08, ECG7409, ECG74S09

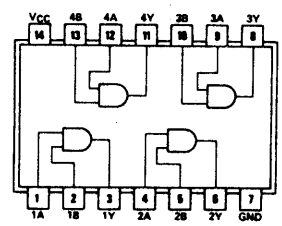

Diag. L9 Outline-Fig. 361

ECG7410, ECG74C10, ECG74H10, ECG74LS10, ECG74S10

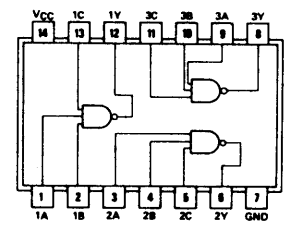

Diag. L10 Outline-Fig. 361

ECG7411, ECG74H11, ECG74LS11, ECG74S11

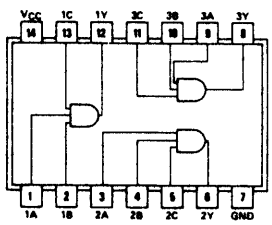

Diag. L11 Outline-Fig. 361

ECG7412

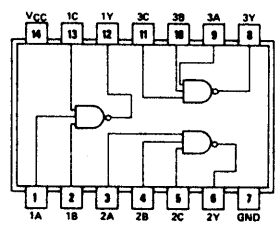

Diag. L12 Outline-Fig. 361

ECG7413

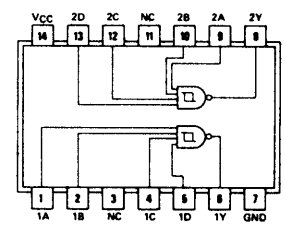

TTL Logic Diagrams (cont'd)

Diag. L13 Outline-Fig. 361

ECG7414, ECG74C14, ECG74LS14

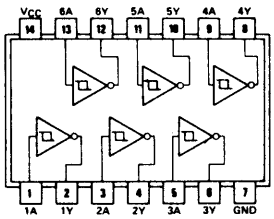

Diag. L14 Outline-Fig. 361

ECG74S15

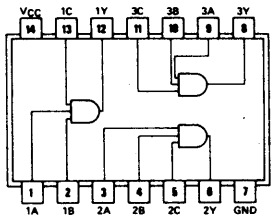

Diag. L15 Outline-Fig. 361

ECG7416

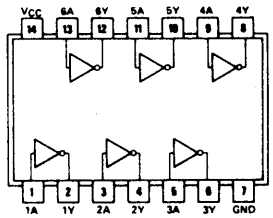

Diag. L16 Outline-Fig. 361

ECG7417

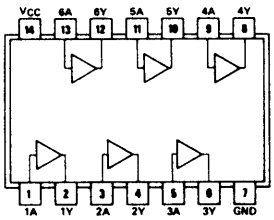

Diag. L17 Outline-Fig. 361

ECG7420, ECG74C20, ECG74H20, ECG74LS20, ECG74S20

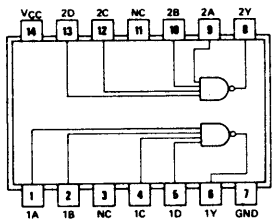

Diag. L18 Outline-Fig. 361

ECG7421, ECG74H21

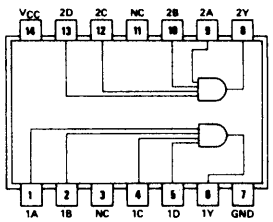

Diag. L19 Outline-Fig. 361

ECG7422, ECG74H22, ECG74S22

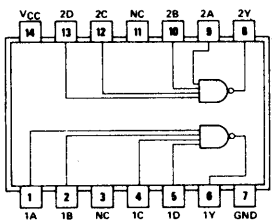

Diag. L20 Outline-Fig. 362

ECG7423

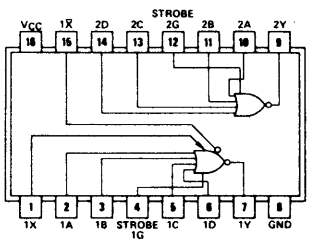

Diag. L21 Outline-Fig. 361

ECG7425

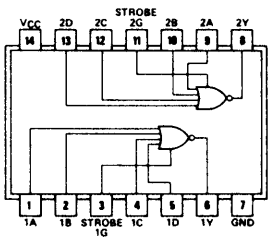

Diag. L22 Outline-Fig. 361

ECG7426

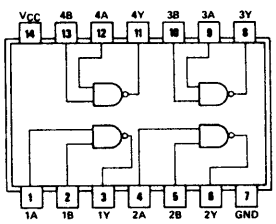

Diag. L23 Outline-Fig. 361

ECG7427, ECG74LS27

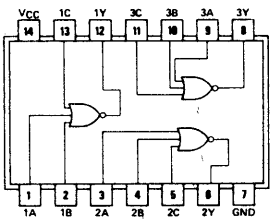

Diag. L24 Outline-Fig. 361

ECG7428

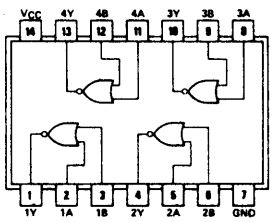

Diag. L25 Outline-Fig. 361

ECG7430, ECG74H30, ECG74LS30, ECG74S30

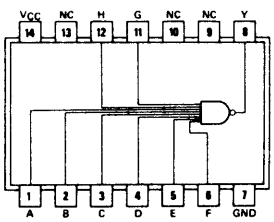

Diag. L26 Outline-Fig. 361

ECG7432, ECG74LS32

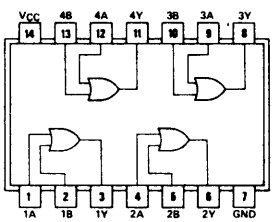

Diag. L27 Outline-Fig. 361

ECG7433

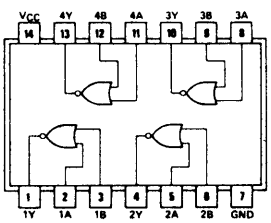

TTL Logic Diagrams (cont'd)

Diag. L28 Outline-Fig. 361

ECG7437, ECG7438, ECG74LS38

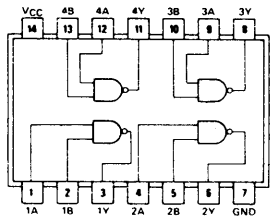

Diag. L29 Outline-Fig. 361

ECG7439

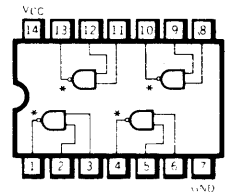

Diag. L30 Outline-Fig. 361

ECG7440, ECG74H40, ECG74S40

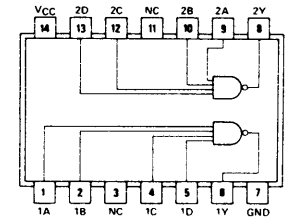

Diag. L31 Outline-Fig. 362

ECG7441

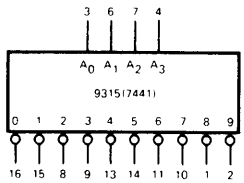

V_{CC} = PIN 5

GND = PIN 12

Diag. L32 Outline-Fig. 362

ECG7442, ECG74C42, ECG74LS42, ECG7443, ECG7444, ECG7445

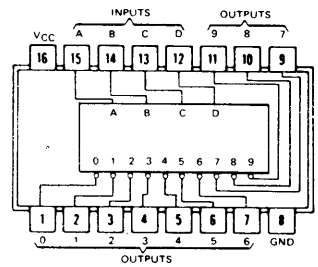

Diag. L33 Outline-Fig. 362

ECG7446, ECG7447, ECG7448, ECG74C48

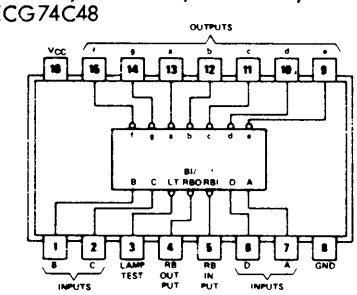

Diag. L34 Outline-Fig. 361

ECG7450, ECG74H50

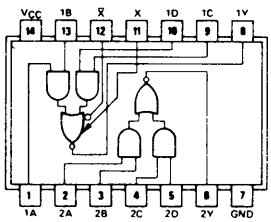

Diag. L35 Outline-Fig. 361

ECG7451, ECG74H51

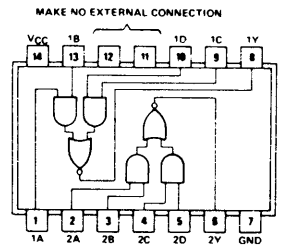

Diag. L36 Outline-Fig. 361

ECG74LS51

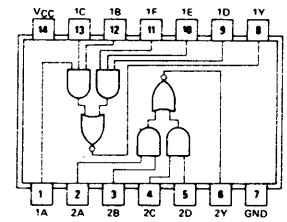

Diag. L37 Outline-Fig. 361

ECG74S51

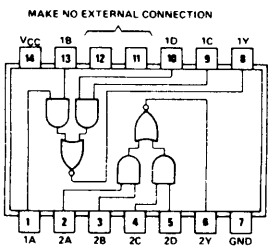

Diag. L38 Outline-Fig. 361

ECG74H52

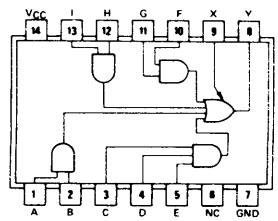

Diag. L39 Outline-Fig. 361

ECG7453

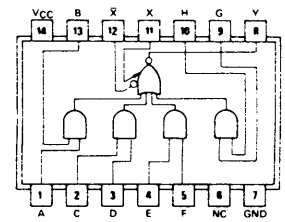

Diag. L40 Outline-Fig. 361

ECG74H53

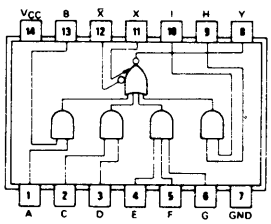

Diag. L41 Outline-Fig. 361

ECG7454

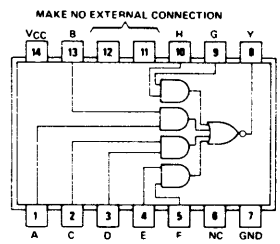

Diag. L42 Outline-Fig. 361

ECG74H54

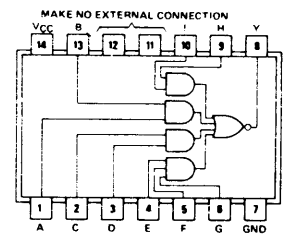

TTL Logic Diagrams (cont'd)

Diag. L43 Outline-Fig. 361

ECG74H55

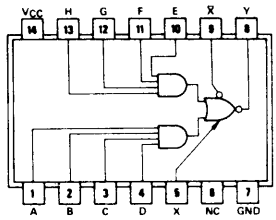

Diag. L44 Outline-Fig. 361

ECG7460, ECG74H60

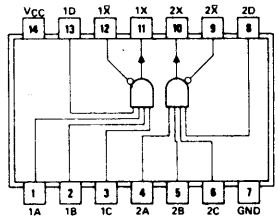

Diag. L45 Outline-Fig. 361

ECG74H61

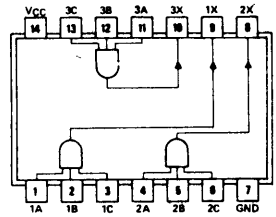

Diag. L46 Outline-Fig. 361

ECG74H62

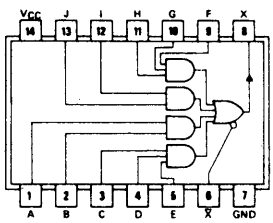

Diag. L47 Outline-Fig. 361

ECG74S64, ECG74S65

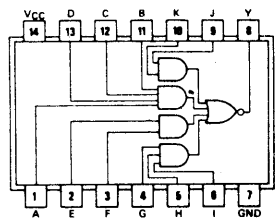

Diag. L48 Outline-Fig. 361

ECG7470

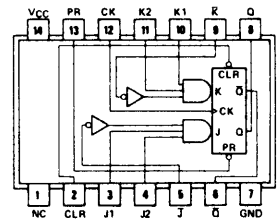

Diag. L49 Outline-Fig. 361

ECG74H71

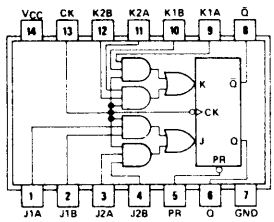

Diag. L50 Outline-Fig. 361

ECG7472, ECG74H72

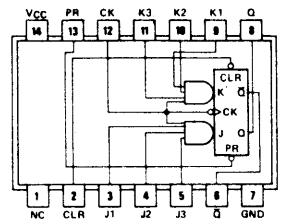

Diag. L51 Outline-Fig. 361

ECG7473, ECG74C73, ECG74H73, ECG74LS73

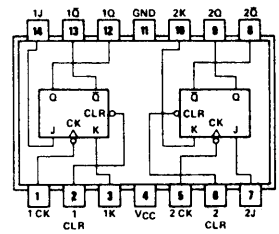

Diag. L52 Outline-Fig. 361

ECG7474, ECG74C74, ECG74H74, ECG74LS74A, ECG74S74

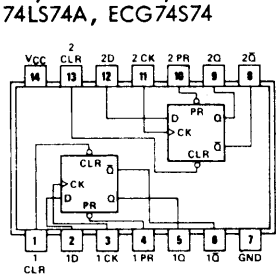

Diag. L53 Outline-Fig. 362

ECG7475, ECG74LS75

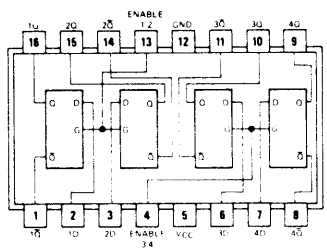

Diag. L54 Outline-Fig. 362

ECG7476, ECG74C76, ECG74H76

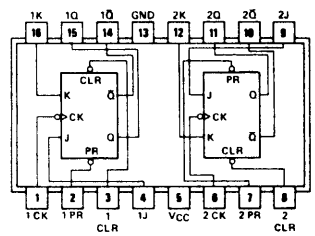

Diag. L55 Outline-Fig. 361

ECG74H78

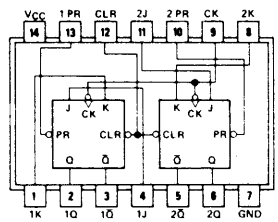

Diag. L56 Outline-Fig. 361

ECG7480

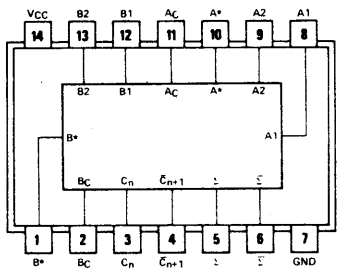

Diag. L57 Outline-Fig. 361

ECG7481

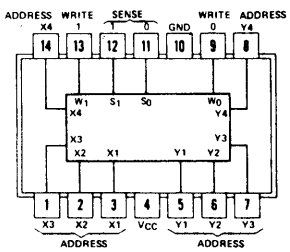

TTL Logic Diagrams (cont'd)

Diag. L58 Outline-Fig. 361

ECG7482

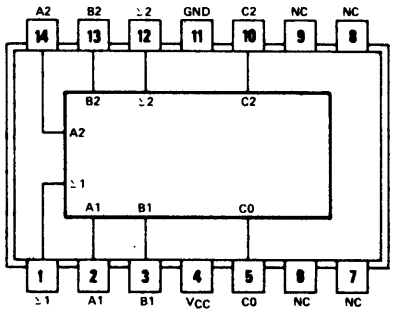

Diag. L59 Outline-Fig. 362

ECG7483, ECG74LS83A

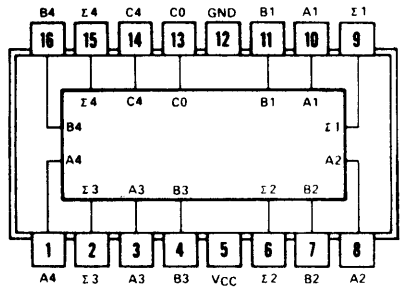

Diag. L60 Outline-Fig. 362

ECG7485, ECG74C85, ECG74LS85

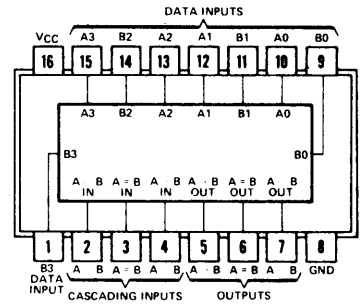

Diag. L61 Outline-Fig. 361

ECG7486, ECG74H86, ECG74LS86, ECG74S86

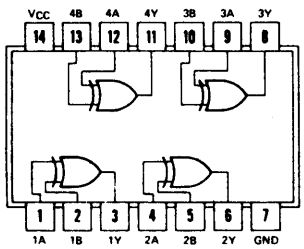

Diag. L62 Outline-Fig. 361

ECG74H87

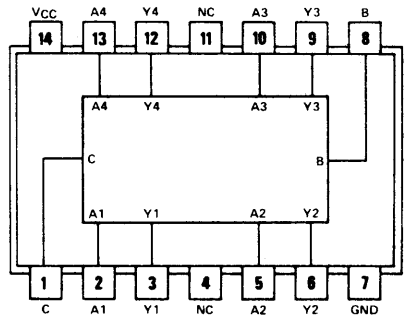

Diag. L63 Outline-Fig. 362

ECG7488A

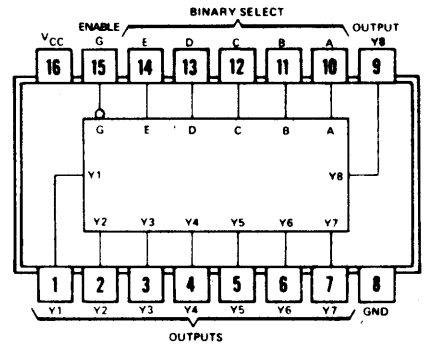

Diag. L64 Outline-Fig. 362

ECG7489

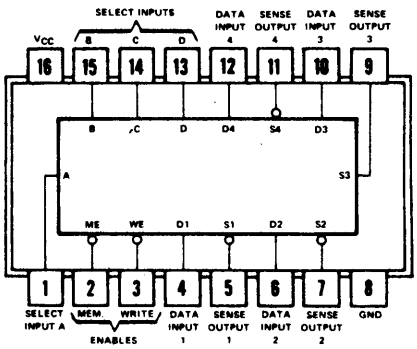

Diag. L65 Outline-Fig. 361

ECG7490, ECG74C90

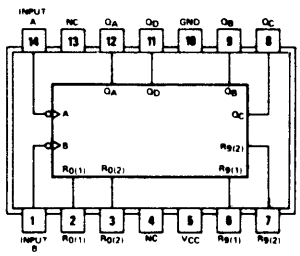

Diag. L66 Outline-Fig. 361

ECG7491

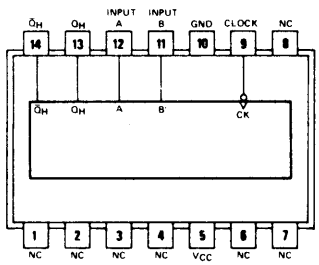

Diag. L67 Outline-Fig. 361

ECG7492

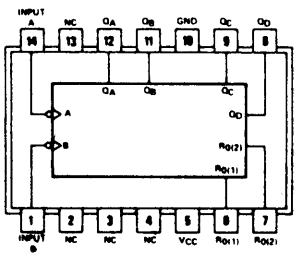

Diag. L68 Outline-Fig. 361

ECG7493A, ECG74C93, ECG74LS93

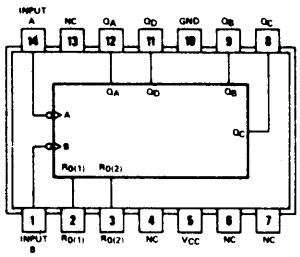

Diag. L69 Outline-Fig. 362

ECG7494

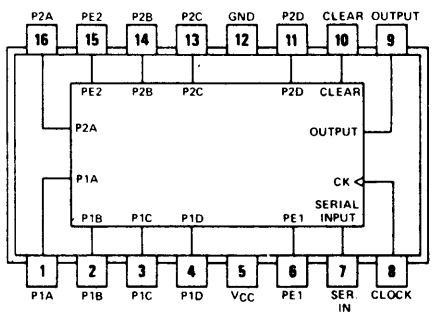

TTL Logic Diagrams (cont'd)

Diag. L70 Outline-Fig. 361
ECG7495

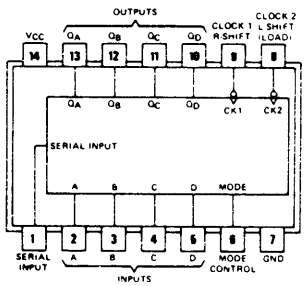

Diag. L71 Outline-Fig. 362
ECG7496

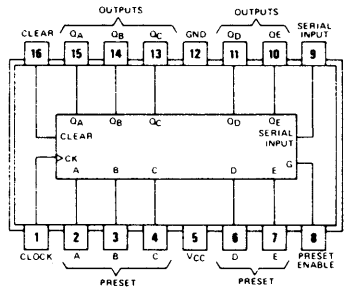

Diag. L72 Outline-Fig. 362
ECG7497

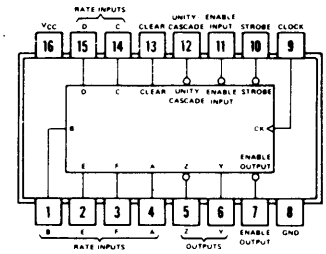

Diag. L73 Outline-Fig. 361
ECG74H101

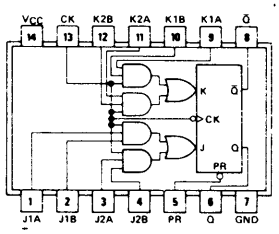

Diag. L74 Outline-Fig. 361
ECG74H102

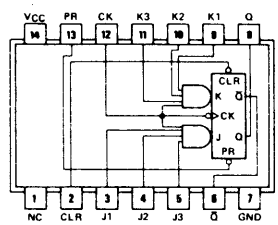

Diag. L75 Outline-Fig. 361
ECG74H103

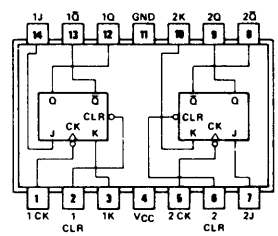

Diag. L76 Outline-Fig. 362
ECG74H106

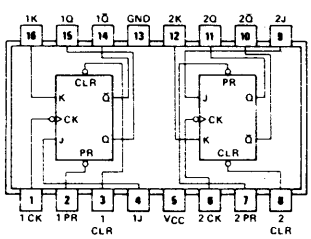

Diag. L77 Outline-Fig. 361
ECG74107, ECG74LS107

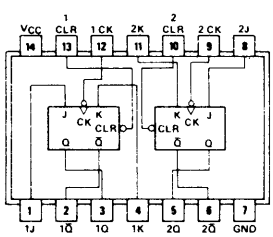

Diag. L78 Outline-Fig. 361
ECG74H108

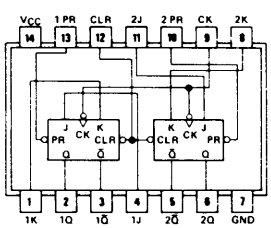

Diag. L79 Outline-Fig. 362
ECG74109, ECG74LS109A

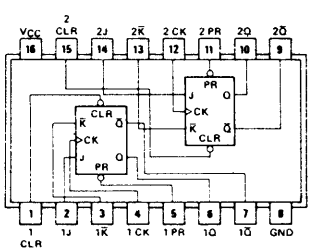

Diag. L80 Outline-Fig. 361
ECG74110

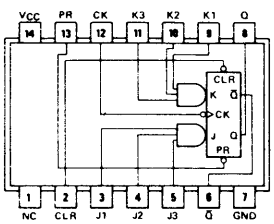

Diag. L81 Outline-Fig. 362
ECG74111

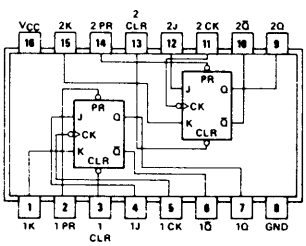

TTL Logic Diagrams (cont'd)

Diag. L82 Outline-Fig. 362
ECG74S112

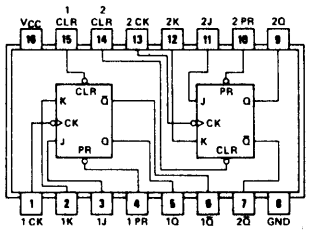

Diag. L83 Outline-Fig. 361
ECG74S113

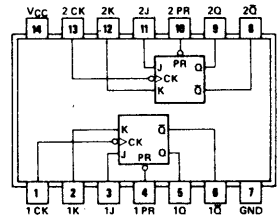

Diag. L84 Outline-Fig. 361
ECG74S114

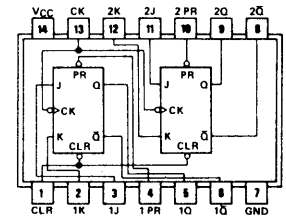

Diag. L85 Outline-Fig. 361
ECG74121

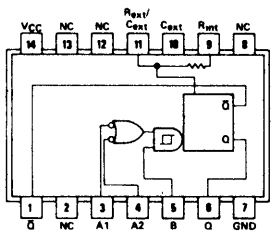

Diag. L86 Outline-Fig. 361
ECG74122

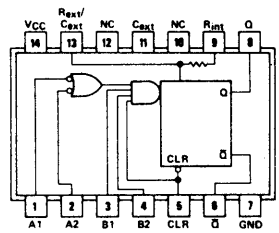

Diag. L87 Outline-Fig. 362
ECG74123, ECG74LS123

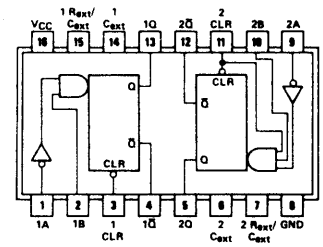

Diag. L88 Outline-Fig. 362
ECG74S124

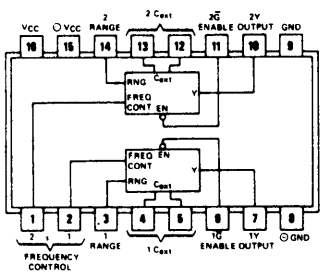

Diag. L89 Outline-Fig. 361
ECG74125

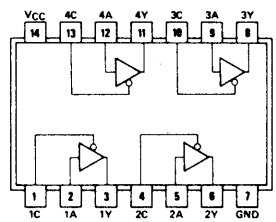

Diag. L90 Outline-Fig. 361
ECG74126

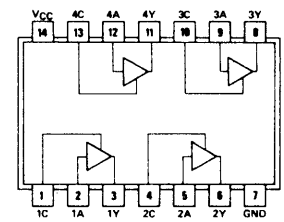

Diag. L91 Outline-Fig. 361
ECG74128

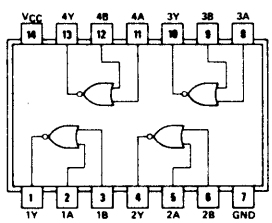

Diag. L92 Outline-Fig. 361
ECG74132

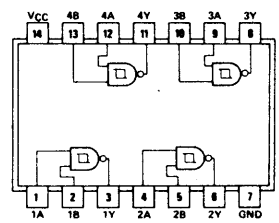

Diag. L93 Outline-Fig. 362
ECG74S133

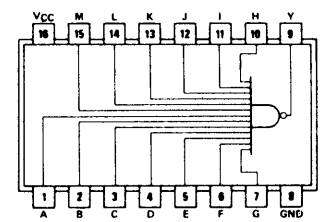

TTL Logic Diagrams (cont'd)

Diag. L94 Outline-Fig. 362
ECG74S134

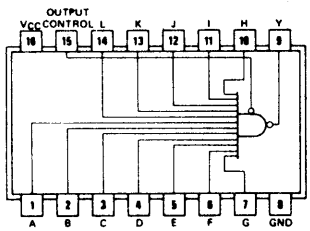

Diag. L95 Outline-Fig. 361
ECG74LS136

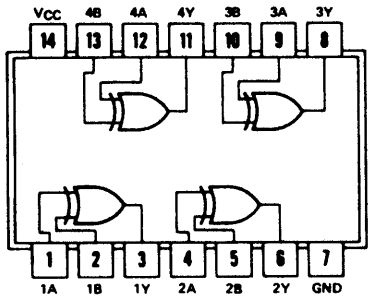

Diag. L96 Outline-Fig. 362
ECG74LS138, ECG74S138

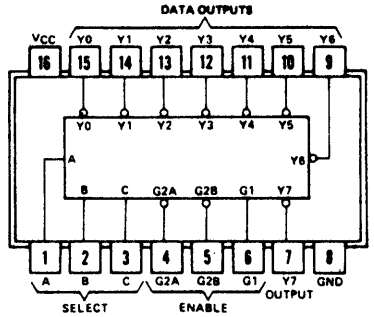

Diag. L97 Outline-Fig. 361
ECG74S140

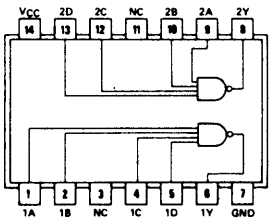

Diag. L98 Outline-Fig. 362
ECG74141

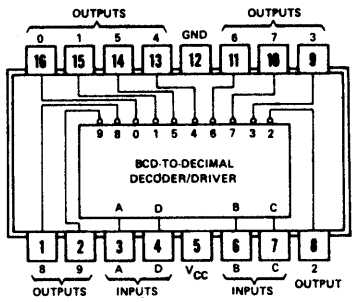

Diag. L99 Outline-Fig. 362
ECG74145

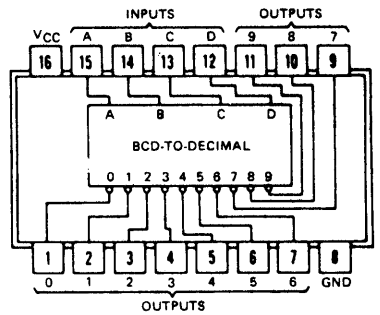

Diag. L100 Outline-Fig. 364
ECG74150

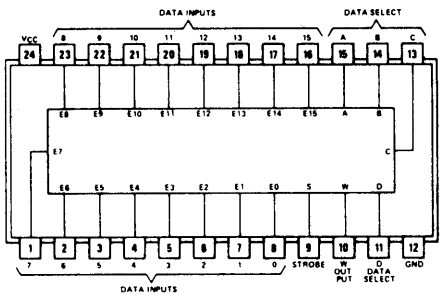

Diag. L101 Outline-Fig. 362
ECG74151, ECG74C151, ECG74LS151, ECG74S151

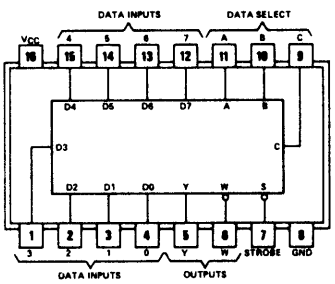

Diag. L102 Outline-Fig. 361
ECG74152

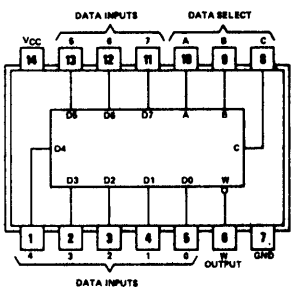

Diag. L103 Outline-Fig. 362
ECG74153, ECG74LS153, ECG74S153

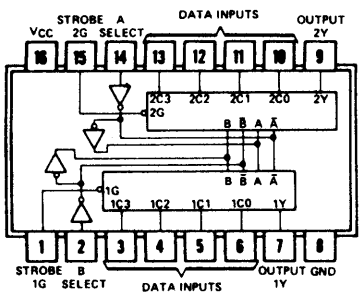

Diag. L104 Outline-Fig. 364
ECG74154, ECG74C154

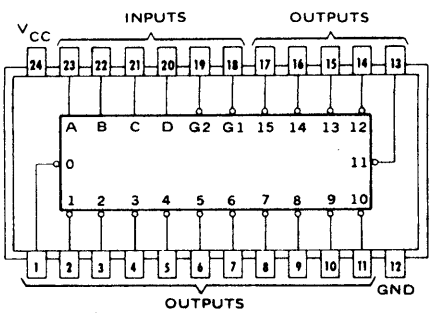

Diag. L105 Outline-Fig. 362
ECG74155, ECG74156

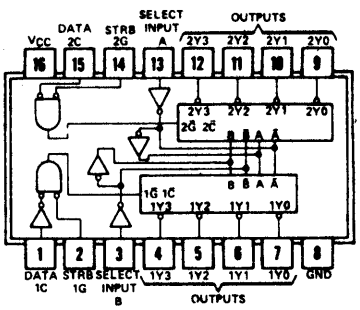

TTL Logic Diagrams (cont'd)

Diag. L106 Outline-Fig. 362

ECG74C157, ECG74LS157, ECG74S157, ECG74S158

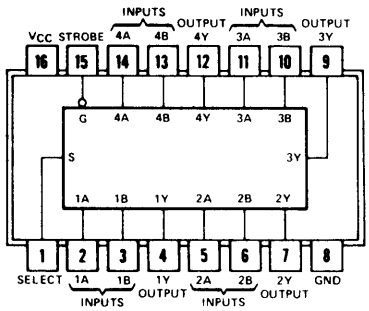

Diag. L107 Outline-Fig. 362

ECG74160, ECG74161, ECG74C161, ECG74LS161A, ECG74162, ECG74163, ECG74LS163A

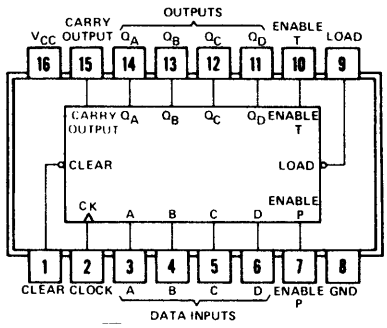

Diag. L108 Outline-Fig. 361

ECG74164, ECG74C164, ECG74LS164

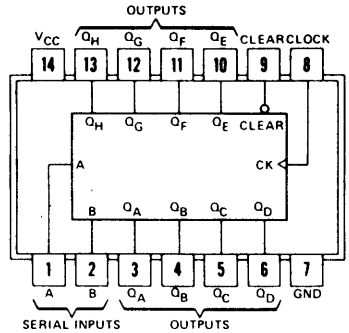

Diag. L109 Outline-Fig. 362

ECG74165

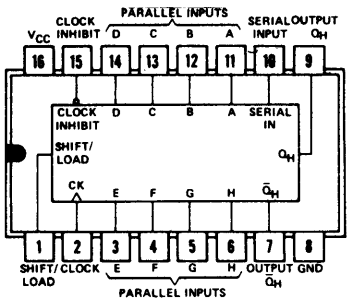

Diag. L110 Outline-Fig. 362

ECG74166

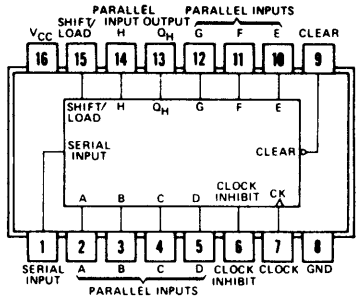

Diag. L111 Outline-Fig. 362

ECG74170

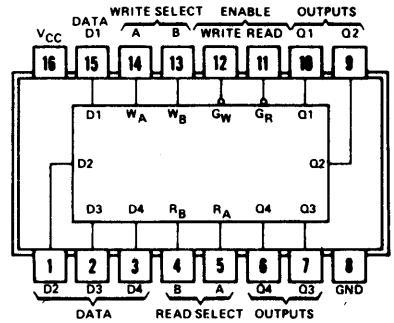

Diag. L112 Outline-Fig. 362

ECG74C173

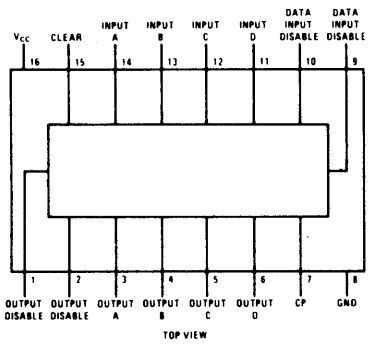

Diag. L113 Outline-Fig. 362

ECG74174, ECG74C174, ECG74LS174, ECG74S174

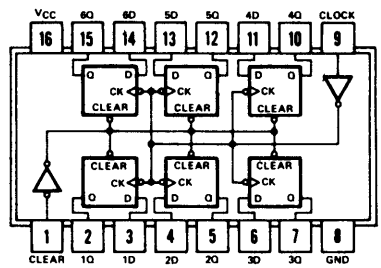

Diag. L114 Outline-Fig. 362

ECG74175, ECG74C175, ECG74LS175, ECG74S175

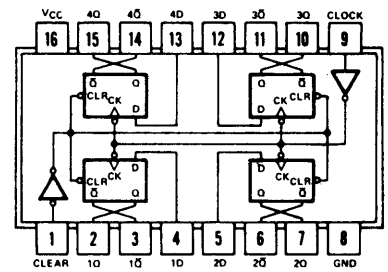

Diag. L115 Outline-Fig. 361

ECG74176, ECG74177

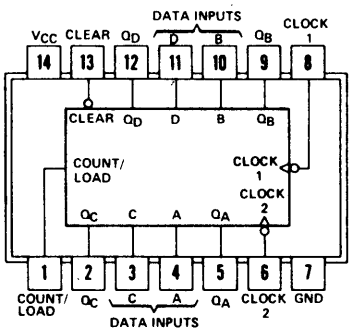

Diag. L116 Outline-Fig. 361

ECG74178

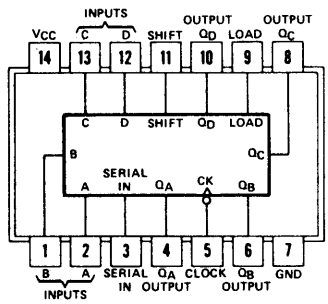

Diag. L117 Outline-Fig. 362

ECG74179

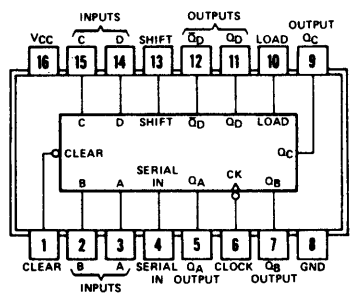

TTL Logic Diagrams (cont'd)

Diag. L118 Outline-Fig. 361
ECG74180

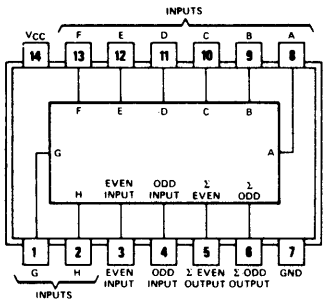

Diag. L119 Outline-Fig. 364
ECG74181, ECG74S181

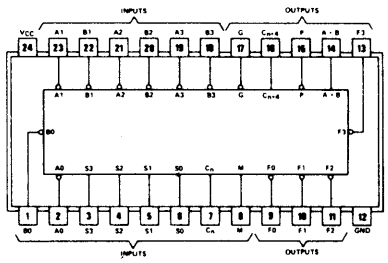

Diag. L120 Outline-Fig. 362
ECG74182

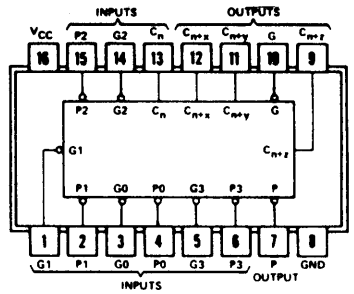

Diag. L121 Outline-Fig. 361
ECG74H183

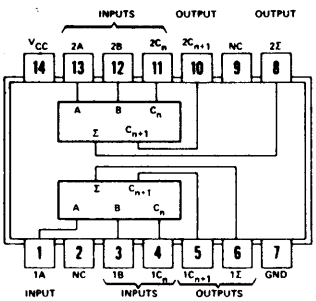

Diag. L122 Outline-Fig. 362
ECG74190, ECG74191, ECG74LS191

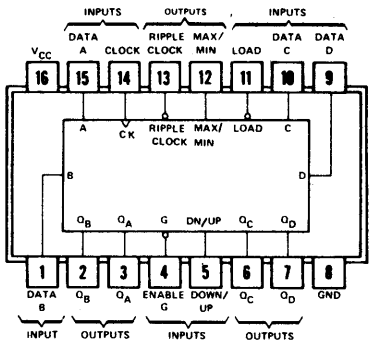

Diag. L123 Outline-Fig. 362
ECG74192, ECG74C192, ECG74193, ECG74C193, ECG74LS193

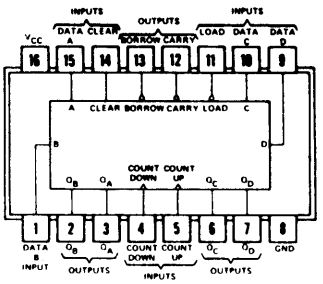

Diag. L124 Outline-Fig. 362
ECG74S194

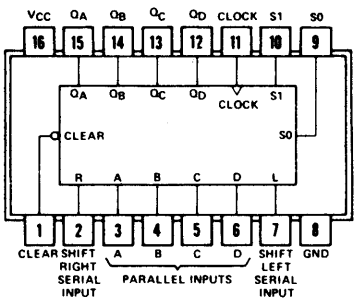

Diag. L125 Outline-Fig. 362
ECG74195, ECG74LS195A

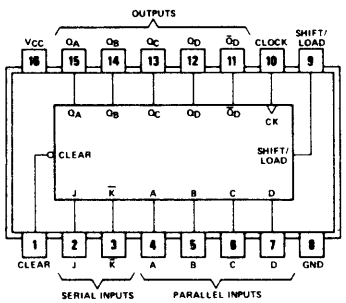

Diag. L126 Outline-Fig. 361
ECG74196, ECG74197

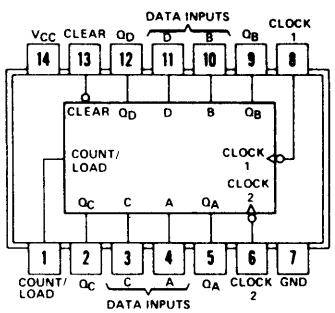

Diag. L127 Outline-Fig. 364
ECG74198, ECG74199

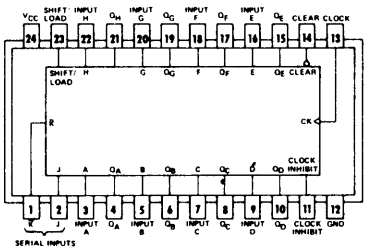

Diag. L128 Outline-Fig. 362
ECG74C221, ECG74LS221

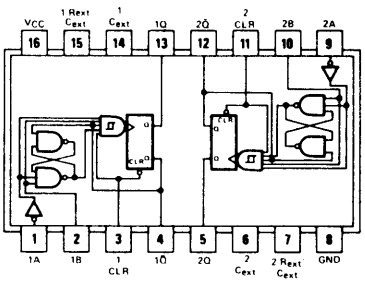

Diag. L129 Outline-Fig. 363
ECG74LS240

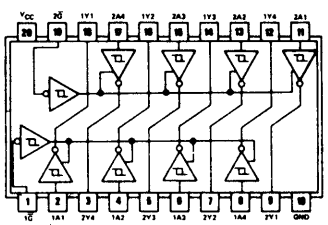

TTL Logic Diagrams (cont'd)

Diag. L130 Outline-Fig. 363
ECG74LS241

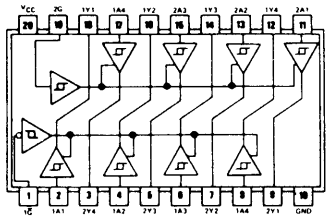

Diag. L131 Outline-Fig. 361
ECG74LS242

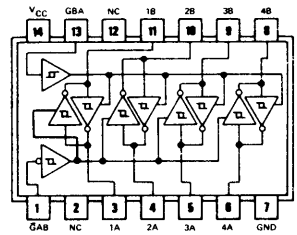

Diag. L132 Outline-Fig. 361
ECG74LS243

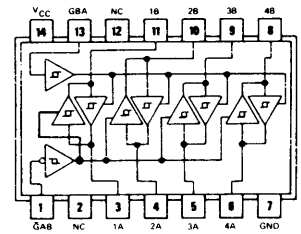

Diag. L133 Outline-Fig. 363
ECG74LS244

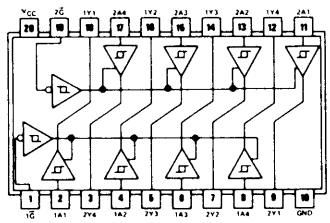

Diag. L134 Outline-Fig. 362
ECG74S251

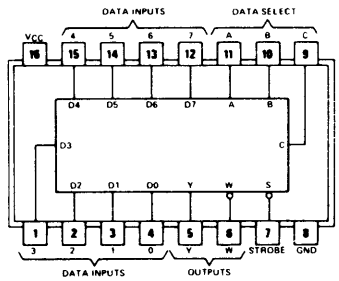

Diag. L135 Outline-Fig. 362
ECG74LS253

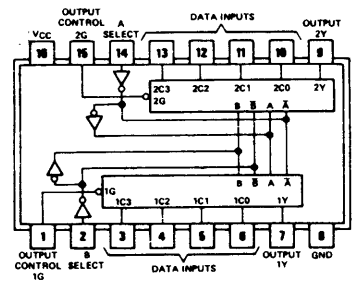

Diag. L136 Outline-Fig. 362
ECG74LS257

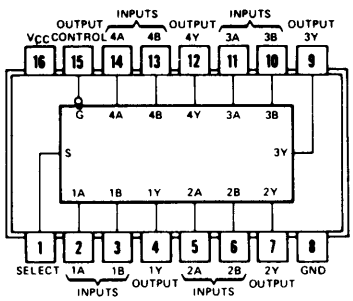

Diag. L137 Outline-Fig. 362
ECG74S258

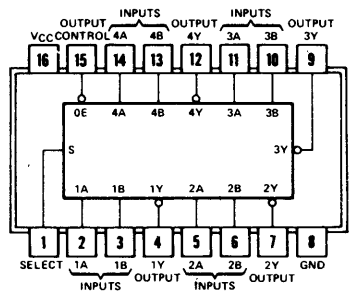

Diag. L138 Outline-Fig. 362
ECG74LS259

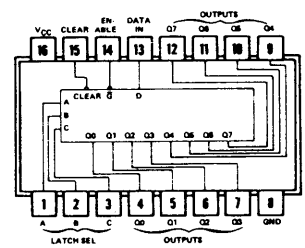

Diag. L139 Outline-Fig. 361
ECG74LS266

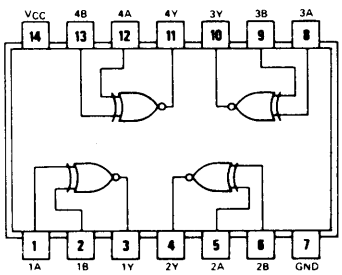

Diag. L140 Outline-Fig. 363
ECG74LS273

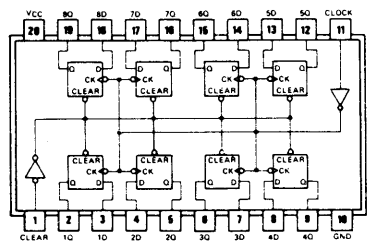

Diag. L141 Outline-Fig. 361
ECG74LS280

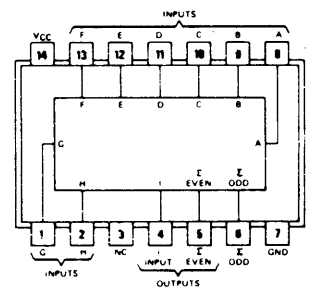

TTL Logic Diagrams (cont'd)

Diag. L142 Outline-Fig. 362
ECG74LS298

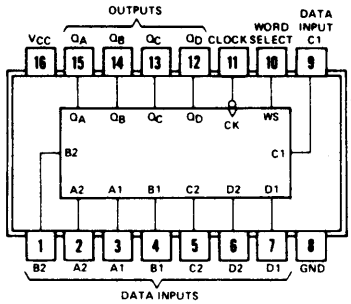

Diag. L143 Outline-Fig. 362
ECG74LS367

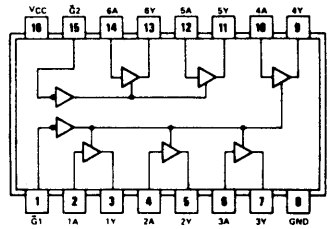

Diag. L144 Outline-Fig. 363
ECG74LS377

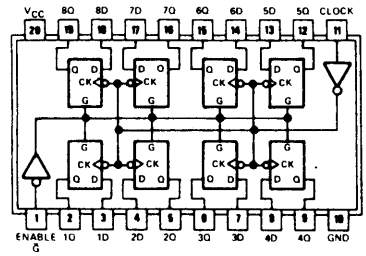

Diag. L145 Outline-Fig. 362
ECG74C925

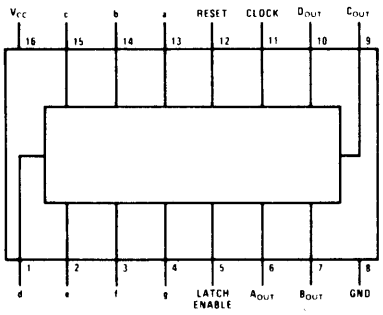

Diag. L146 Outline-Fig. 362
ECG80C97

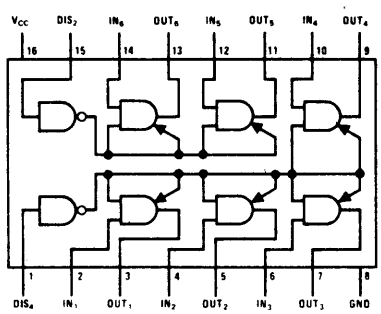

TTL Outlines

Fig. 361

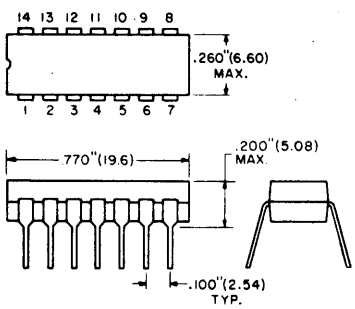

Fig. 362

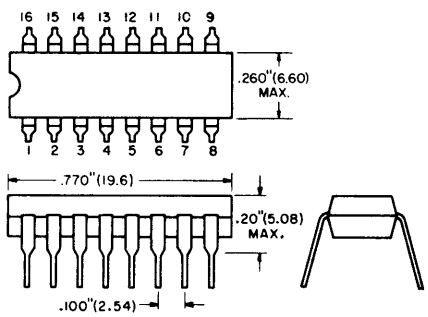

Fig. 363

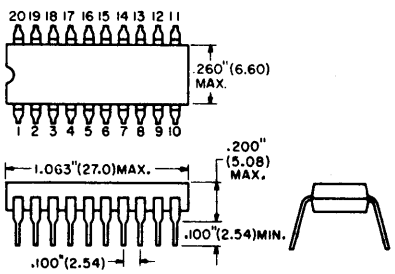

Fig. 364

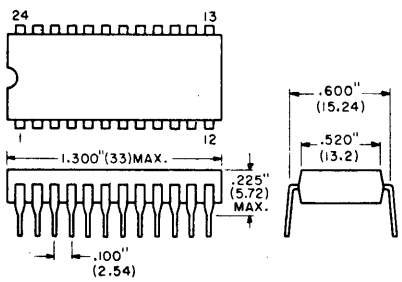

Dual inline plastic cases may have a round indentation on top surface for indexing in place of notched edge.

DTL Diode-Transistor Logic

ECG9093 Outline-Fig. 370
Dual M/S J-K Flip-Flop (5 MHz)

ECG9094
Dual M/S J-K Flip-Flop (8 MHz)

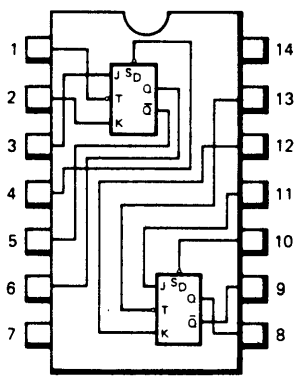

V_{CC} = Pin 14, GND = Pin 7

ECG9097 Outline-Fig. 370
Dual M/S J-K Flip-Flop (8 MHz)

ECG9099
Dual M/S J-K Flip-Flop (5 MHz)

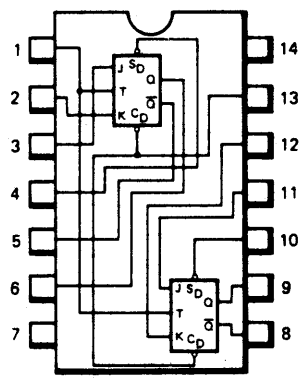

V_{CC} = Pin 14, GND = Pin 7

ECG9109, ECG9110 Outline-Fig. 370
High Voltage Hex Inverter

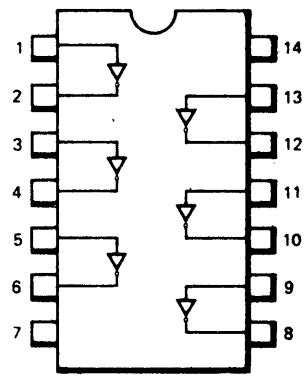

V_{CC} = Pin 14, GND = Pin 7

ECG9111 Outline-Fig. 370
RS Flip-Flop

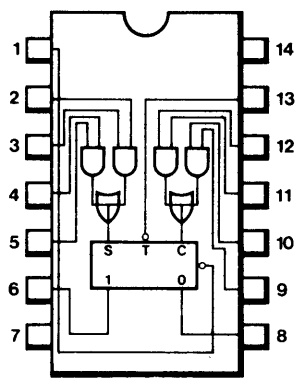

V_{CC} = Pin 14, GND = Pin 7

ECG9112 Outline-Fig. 370
High Voltage Hex Inverter

ECG9135
Hex Inverter (Open Collector)

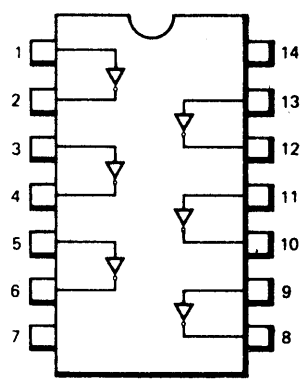

V_{CC} = Pin 14, GND = Pin 7

ECG9157 Outline-Fig. 370
Quad 2-Input Buffered NAND Gate

ECG9158
Quad 2-Input Power NAND Gate

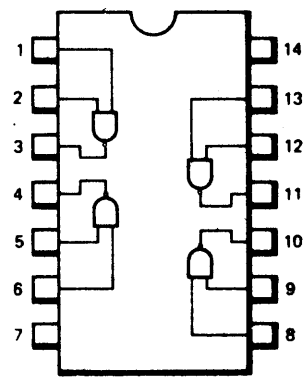

V_{CC} = Pin 14, GND = Pin 7

DTL (cont'd)

ECG9800 Outline-Fig. 370
Dual 5-Input NAND Gate (6 Kohm-Pullup)

ECG9801
Dual 5-Input NAND Gate (2 Kohm-Pullup)

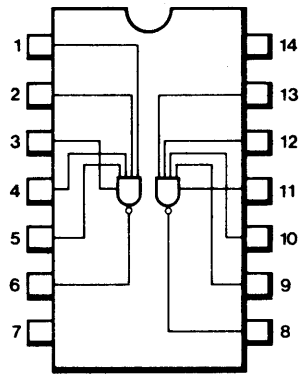

V_{CC} = Pin 14, GND = Pin 7

ECG9802 Outline-Fig. 370
8-Input NAND Gate (6 Kohm-Pullup)

ECG9803
8-Input NAND Gate (2 Kohm-Pullup)

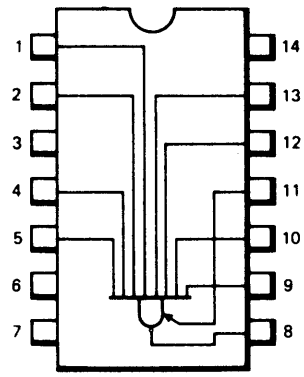

V_{CC} = Pin 14, GND = Pin 7

ECG9804 Outline-Fig. 370
10-Input NAND Gate (6 Kohm-Pullup)

ECG9805
10-Input NAND Gate (2 Kohm-Pullup)

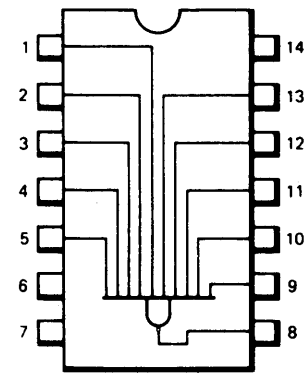

V_{CC} = Pin 14, GND = Pin 7

ECG9806 Outline-Fig. 370
Quad 2-Input AND Gate (6 Kohm-Pullup)

ECG9807
Quad 2-Input AND Gate (2 Kohm-Pullup)

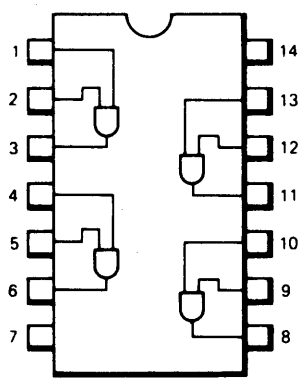

V_{CC} = Pin 14, GND = Pin 7

ECG9808 Outline-Fig. 370
Quad 2-Input OR Gate (6 Kohm-Pullup)

ECG9809
Quad 2-Input OR Gate (2 Kohm-Pullup)

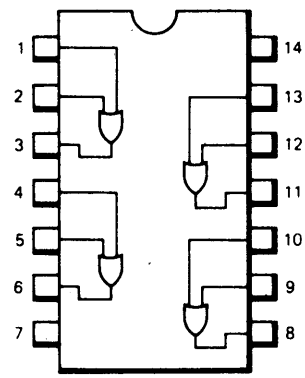

V_{CC} = Pin 14, GND = Pin 7

ECG9810 Outline-Fig. 370
Quad 2-Input NOR Gate (6 Kohm-Pullup)

ECG9811
Quad 2-Input NOR Gate (2 Kohm-Pullup)

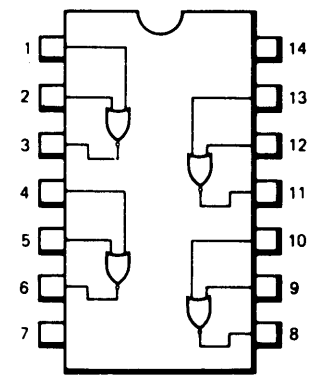

V_{CC} = Pin 14, GND = Pin 7

ECG9812 Outline-Fig. 370
Quad 2-Input Exclusive OR Gate

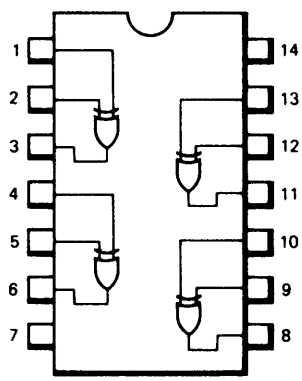

V_{CC} = Pin 14, GND = Pin 7

ECG9813 Outline-Fig. 371
Quad Latch with Complementary Outputs

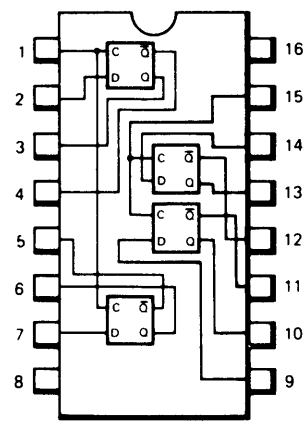

V_{CC} = Pin 16, GND = Pin 8

ECG9814 Outline-Fig. 370
Quad Latch

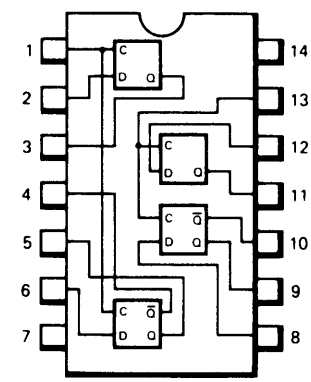

V_{CC} = Pin 14, GND = Pin 7

DTL (cont'd)

ECG9930 Outline-Fig. 370

Dual 4-Input Extendable NAND Gate

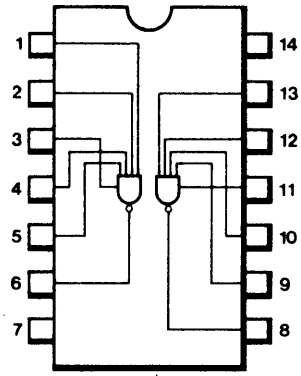

V_{CC} = Pin 14, GND = Pin 7

ECG9931 Outline-Fig. 370

RS Clocked Flip-Flop

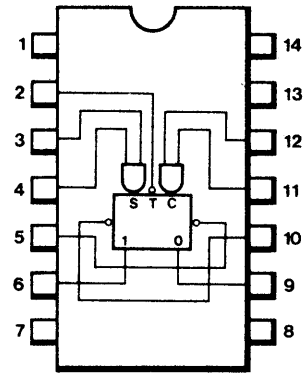

V_{CC} = Pin 14, GND = Pin 7

ECG9932 Outline-Fig. 370

Dual 4-Input Extendable NAND Buffer Gate

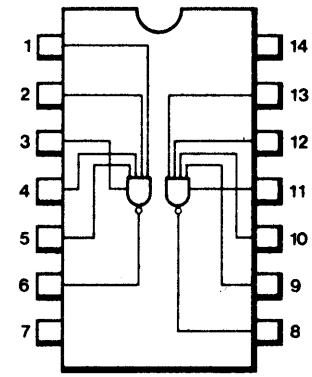

V_{CC} = Pin 14, GND = Pin 7

ECG9933 Outline-Fig. 370

Dual 4-Input Extender

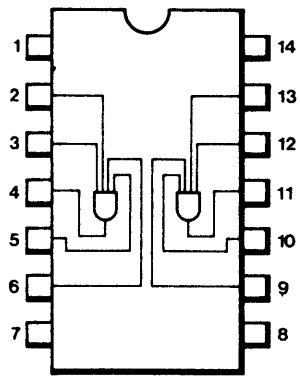

No connection required to V_{CC} (Pin 14)

V_{CC} = Pin 14, GND = Pin 7

ECG9935 Outline-Fig. 370

Extendable Hex Inverter

ECG9936, ECG9937

Hex Inverters

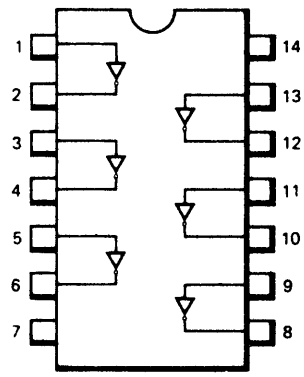

V_{CC} = Pin 14, GND = Pin 7

ECG9941 Outline-Fig. 370

Monostable Multivibrator (Input Clamp Diodes)

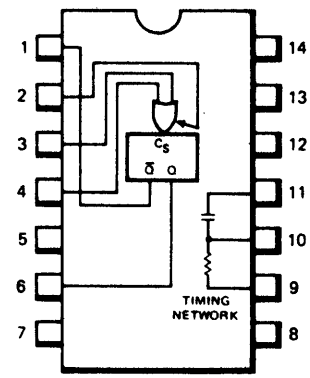

V_{CC} = Pin 14, GND = Pin 7

ECG9944 Outline-Fig. 370

Dual 4-Input Extendable NAND Buffer Gate (Open Collector)

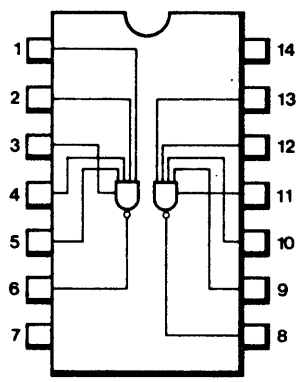

V_{CC} = Pin 14, GND = Pin 7

ECG9945 Outline-Fig. 370

RS Clocked Flip-Flop

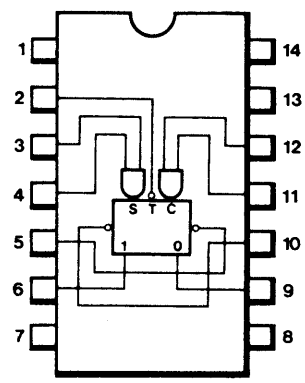

V_{CC} = Pin 14, GND = Pin 7

ECG9946 Outline-Fig. 370

Quad 2-Input NAND Gate

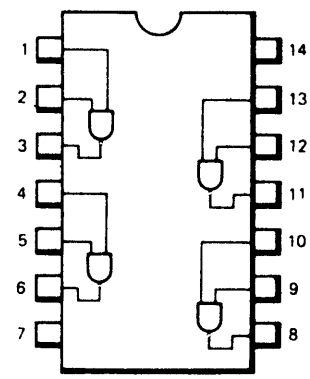

V_{CC} = Pin 14, GND = Pin 7

DTL (cont'd)

ECG9948 Outline-Fig. 370
RS Clocked Flip-Flop (Fast)

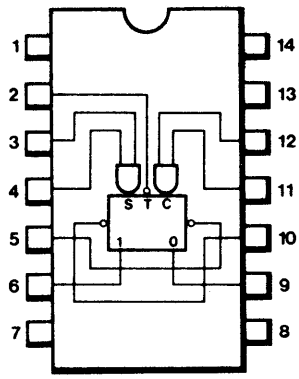

V_{CC} = Pin 14, GND = Pin 7

ECG9949 Outline-Fig. 370
Quad 2-Input NAND Gate (Fast)

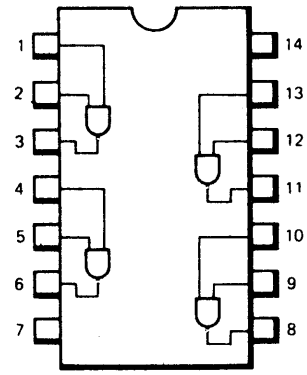

V_{CC} = Pin 14, GND = Pin 7

ECG9950 Outline-Fig. 370
A-C Coupled RS Flip-Flop

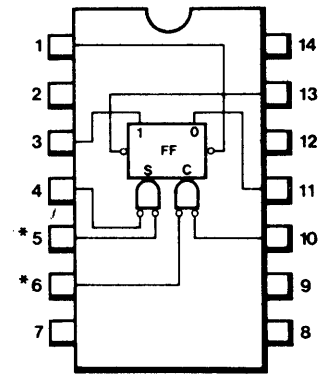

* These inputs are capacitively coupled.

V_{CC} = Pin 14, GND = Pin 7

ECG9951 Outline-Fig. 370
Monostable Multivibrator

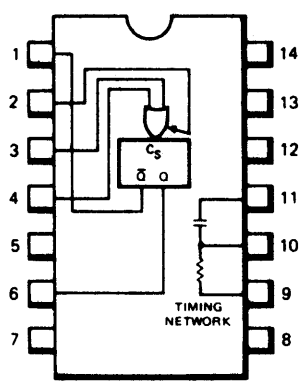

V_{CC} = Pin 14, GND = Pin 7

ECG9961 Outline-Fig. 370
Dual 4-Input Extendable NAND Gate (Fast)

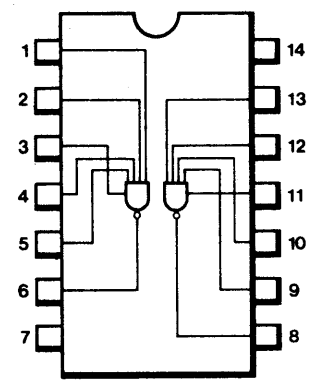

V_{CC} = Pin 14, GND = Pin 7

ECG9962 Outline-Fig. 370
Triple 3-Input NAND Gate
ECG9963
Triple 3-Input NAND Gate (Fast)

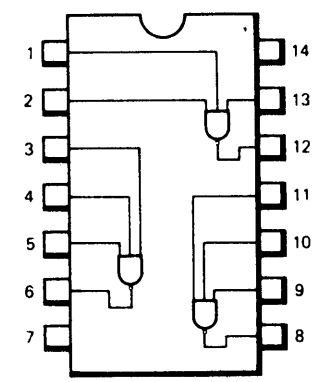

V_{CC} = Pin 14, GND = Pin 7

DTL Outlines

Fig. 370

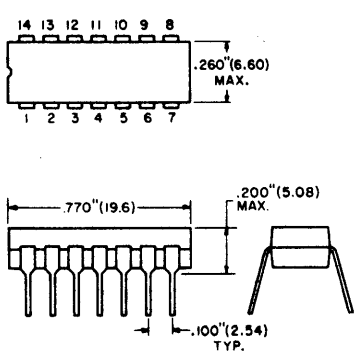

Fig. 371

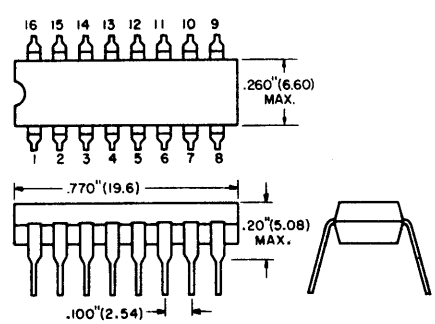

Dual inline plastic cases may have a round indentation on top surface for indexing in place of notched edge.

HTL High Threshold Logic

ECG9660 Outline-Fig. 375

Expandable Dual 4-Input NAND Gate (Active Pullup)

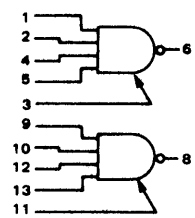

V_{CC} = Pin 14, GND = Pin 7

ECG9661 Outline-Fig. 375

Expandable 4-Input NAND Gate (Passive Pullup)

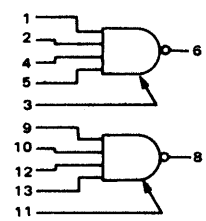

V_{CC} = Pin 14, GND = Pin 7

ECG9662 Outline-Fig. 375

Expandable 4-Input Line NAND Driver (Active Pullup)

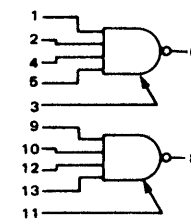

V_{CC} = Pin 14, GND = Pin 7

ECG9663 Outline-Fig. 375

Dual J-K Flip-Flop

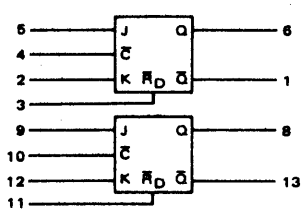

V_{CC} = Pin 14, GND = Pin 7

ECG9664 Outline-Fig. 375

M/S R-S Flip-Flop

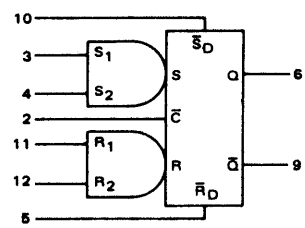

V_{CC} = Pin 14, GND = Pin 7

ECG9665 Outline-Fig. 375

Triple Level Translator tp = 40 ns Typ

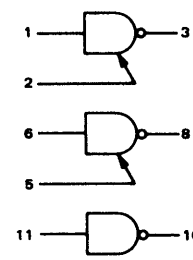

V_{CC} = Pin 14, GND = Pin 7

ECG9666 Outline-Fig. 375

Triple Level Translator tp = 75 ns Typ

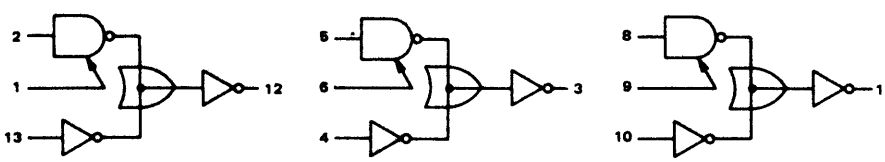

V_{CC} = Pin 14, GND = Pin 7

ECG9667 Outline-Fig. 375

Dual Monostable Multivibrator

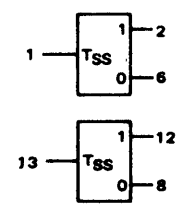

V_{CC} = Pin 14, GND = Pin 7

HTL (cont'd)

ECG9668 Outline-Fig. 375

Quad 2-Input NAND Gate (Passive Pullup)

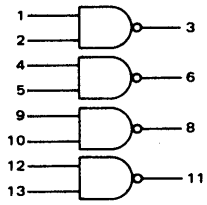

V_{CC} = Pin 14, GND = Pin 7

ECG9669 Outline-Fig. 375

Dual 4-Input Expander

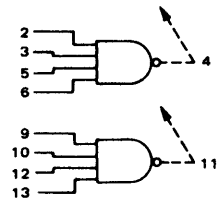

V_{CC} = Pin 14, GND = Pin 7

ECG9670 Outline-Fig. 375

Triple 3-Input NAND Gate (Passive Pullup)

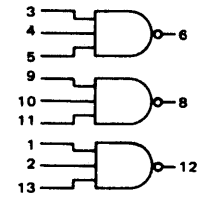

V_{CC} = Pin 14, GND = Pin 7

ECG9671 Outline-Fig. 375

Triple 3-Input NAND Gate (Active Pullup)

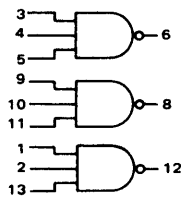

V_{CC} = Pin 14, GND = Pin 7

ECG9672 Outline-Fig. 375

Quad 2-Input NAND Gate (Active Pullup)

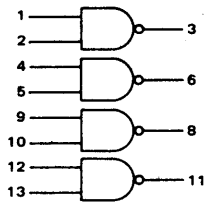

V_{CC} = Pin 14, GND = Pin 7

ECG9673 Outline-Fig. 375

Dual 2-Input AND-OR-Invert Gate (Active Pullup)

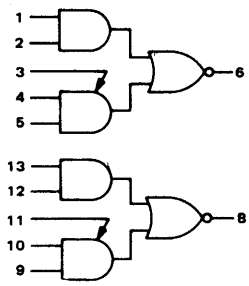

V_{CC} = Pin 14, GND = Pin 7

ECG9674 Outline-Fig. 375

Dual 2-Input AND-OR-Invert Gate (Passive Pullup)

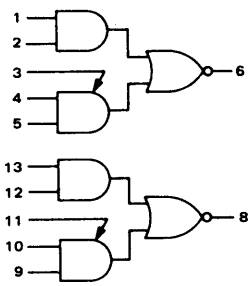

V_{CC} = Pin 14, GND = Pin 7

ECG9675 Outline-Fig. 375

Dual Pulse Stretcher

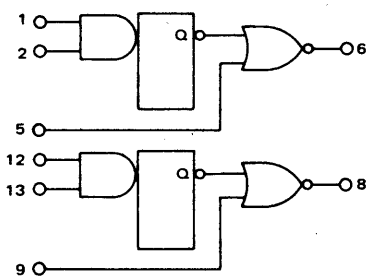

V_{CC} = Pin 14, GND = Pin 7

ECG9676 Outline-Fig. 376

BCD-to-Decimal Decoder Driver

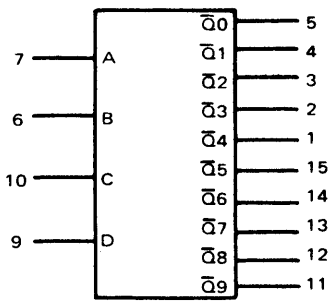

V_{CC} = Pin 16, GND = Pin 8

ECG9677 Outline-Fig. 376

Hex-Inverter with Strobe (Active Pullup)

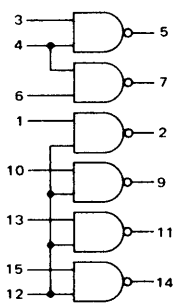

V_{CC} = Pin 16, GND = Pin 8

ECG9678 Outline-Fig. 376

Hex-Inverter with Strobe (Without Output Resistors)

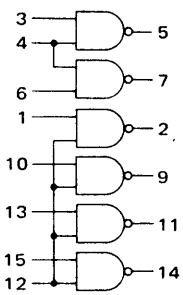

V_{CC} = Pin 16, GND = Pin 8

ECG9679 Outline-Fig. 375

Dual Lamp/Line Driver

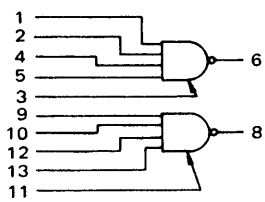

V_{CC} = Pin 14, GND = Pin 7

HTL (cont'd)

ECG9680 Outline-Fig. 375
Hex-Inverter (Active Pullup)

ECG9681
Hex-Inverter (Open Collector)

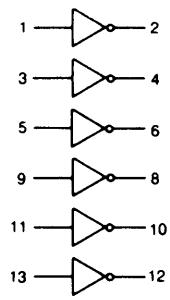

V_{CC} = Pin 14, GND = Pin 7

ECG9682 Outline-Fig. 376
Quad Latch

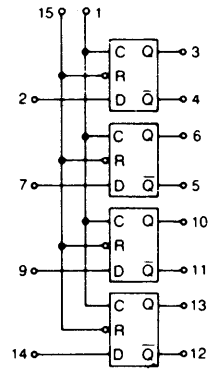

V_{CC} = Pin 16, GND = Pin 8

ECG9683 Outline-Fig. 375
Quad 2-Input Exclusive OR Gate

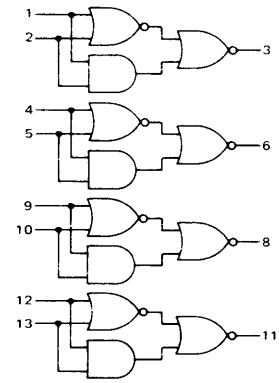

V_{CC} = Pin 14, GND = Pin 7

ECG9684 Outline-Fig. 376
Decade Counter

ECG9685
Binary Counter

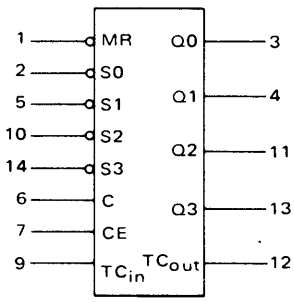

V_{CC} = Pin 16, GND = Pin 8

ECG9686 Outline-Fig. 376
4-Bit Shift Register

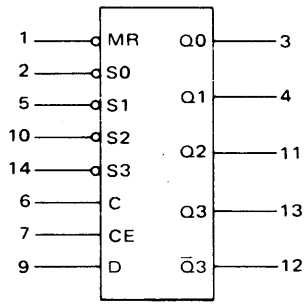

V_{CC} = Pin 16, GND = Pin 8

ECG9688 Outline-Fig. 376
Dual J-K Flip-Flop

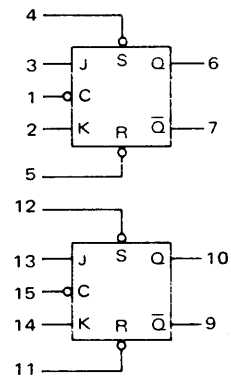

V_{CC} = Pin 16, GND = Pin 8

ECG9689 Outline-Fig. 375
Hex-Inverter (High Voltage)

ECG9690
Hex-Inverter (Active Pullup)

ECG9691
Hex-Inverter/Interface Element

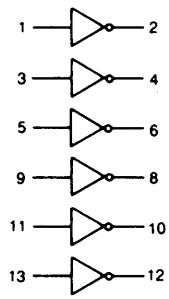

V_{CC} = Pin 14, GND = Pin 7

ECG9696 Outline-Fig. 376
Dual Interface Element, Line Driver/
Receiver

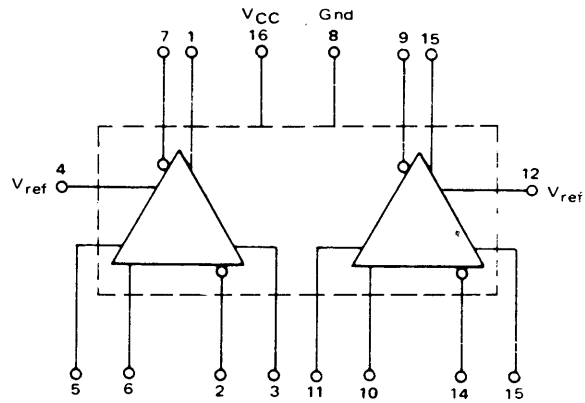

V_{CC} = Pin 16, GND = Pin 8

HTL Outlines

Fig. 375

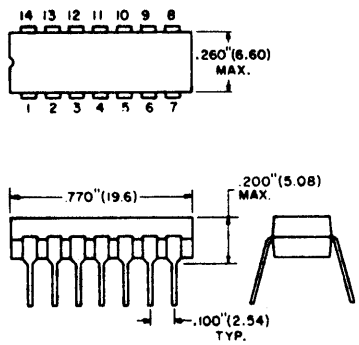

Fig. 376

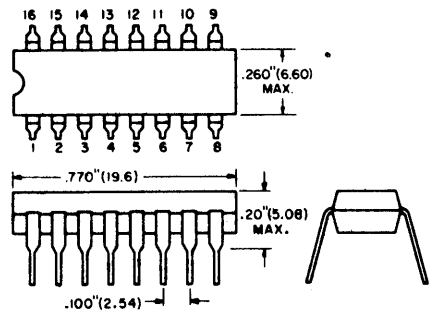

Dual inline plastic cases may have a round indentation on top surface for indexing in place of notched edge.

RTL Resistor-Transistor Logic

ECG9900 Outline-Fig. 380
Buffer-Medium Power

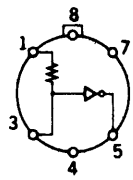

V_{CC} = Pin 8, GND = Pin 4

ECG9903 Outline-Fig. 380
3-Input NOR Gate-Medium Power

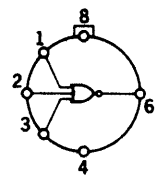

V_{CC} = Pin 8, GND = Pin 4

ECG9904 Outline-Fig. 380
Half Adder-Medium Power

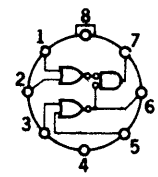

V_{CC} = Pin 8, GND = Pin 4

ECG9905 Outline-Fig. 380
Half-Shift Register-Medium Power

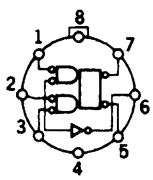

V_{CC} = Pin 8, GND = Pin 4

ECG9906 Outline-Fig. 380
Half-Shift Register W I/O-Inverter-Medium Power

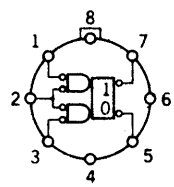

V_{CC} = Pin 8, GND = Pin 4

ECG9907 Outline-Fig. 380
4-Input NOR Gate-Medium Power

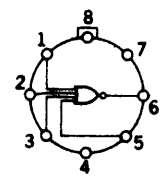

V_{CC} = Pin 8, GND = Pin 4

ECG9908 Outline-Fig. 380
Adder and Exclusive OR-Low Power

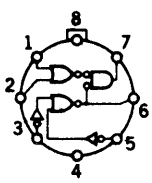

V_{CC} = Pin 8, GND = Pin 4

ECG9909 Outline-Fig. 380
Buffer-Low Power

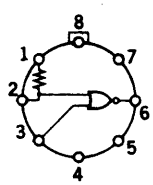

V_{CC} = Pin 8, GND = Pin 4

ECG9910 Outline-Fig. 380
Dual 2-Input NOR Gate-Low Power

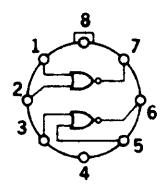

V_{CC} = Pin 8, GND = Pin 4

ECG9911 Outline-Fig. 380
4-Input NOR Gate and Inverter-Low Power

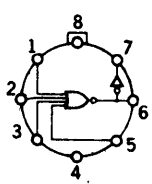

V_{CC} = Pin 8, GND = Pin 4

ECG9912 Outline-Fig. 380
Half Adder-Low Power

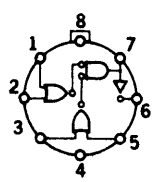

V_{CC} = Pin 8, GND = Pin 4

ECG9913 Outline-Fig. 380
Type D Flip-Flop-Low Power

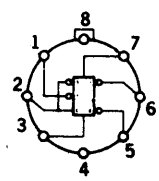

V_{CC} = Pin 8, GND = Pin 4

ECG9914 Outline-Fig. 380
Dual 2-Input NOR Gate-Medium Power

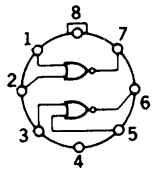

V_{CC} = Pin 8, GND = Pin 4

ECG9915 Outline-Fig. 381
Dual 3-Input NOR Gate-Medium Power

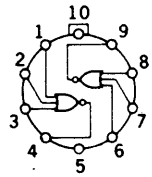

V_{CC} = Pin 10, GND = Pin 5

ECG9917 Outline-Fig. 382
Quad 2-Input NOR Gate-Low Power

ECG9924
Quad 2-Input NOR Gate-Medium Power

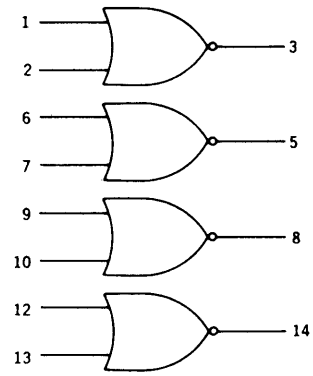

V_{CC} = Pin 11, GND = Pin 4

ECG9921 Outline-Fig. 380
Gate Expander-Low Power

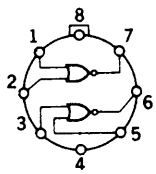

V_{CC} = Pin 8, GND = Pin 4

ECG9923 Outline-Fig. 380
J-K Flip-Flop-Medium Power

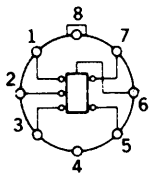

V_{CC} = Pin 8, GND = Pin 4

ECG9926 Outline-Fig. 381
J-K Flip-Flop-Medium Power

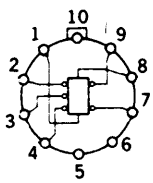

V_{CC} = Pin 10, GND = Pin 5

ECG9927 Outline-Fig. 381
Quad Inverter-Medium Power

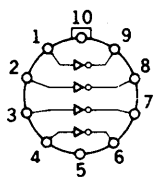

V_{CC} = Pin 10, GND = Pin 5

ECG9974 Outline-Fig. 380
J-K Flip-Flop

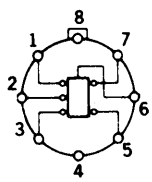

V_{CC} = Pin 8, GND = Pin 4

ECG9976 Outline-Fig. 382
Dual J-K Flip-Flop-Low Power

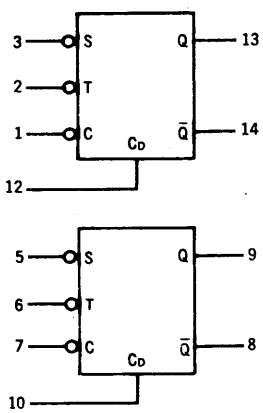

V_{CC} = Pin 11, GND = Pin 4

ECG9989 Outline-Fig. 380
Hex-Inverter-Medium Power

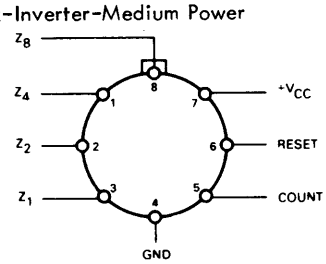

V_{CC} = Pin 8, GND = Pin 4

RTL Outlines

Fig. 380

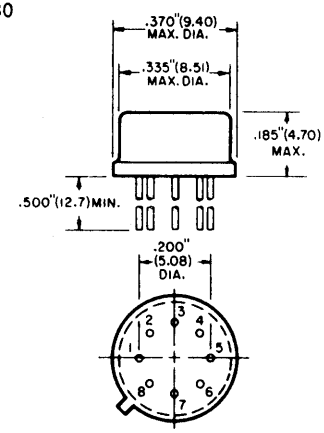

Fig. 381

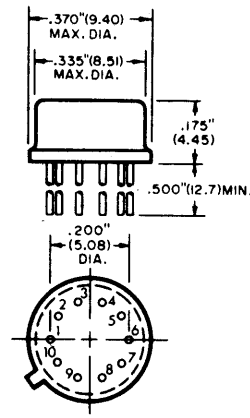

Fig. 382

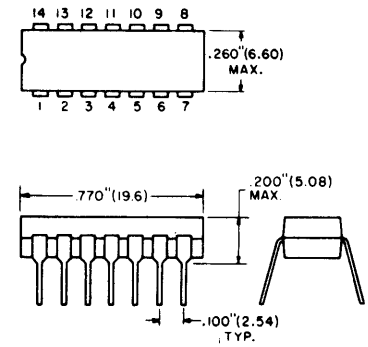

Dual inline plastic cases may have a round indentation on top surface for indexing in place of notched edge.

Interface (Display Driver) Integrated Circuits

ECG No.	Description	Ckt. Logic Diag. No.	Page No.	Fig. No.
74C48	IC-CMOS, BCD-7 Segment Decoder	--	135	--
74C925	IC-CMOS, 4 Digit Counter, Multiplex 7 Segment Driver	--	144	--
916	IC-Transistor Array for Digital Segment Displays	--	72	--
2011	IC-7 Channel MOS/TTL Input Driver	C1	156	397
2012	IC-7 Channel PMOS Input Driver	C1	156	397
2013	IC-7 Channel CMOS/TTL Input Driver	C1	156	397
2014	IC-7 Channel CMOS/PMOS Input Driver	C1	156	397
2015	IC-7 Channel CMOS/TTL Input Driver	C1	156	397
2016	IC-8 Channel MOS/TTL Input Driver	C2	156	398
2017	IC-8 Channel PMOS Input Driver	C2	156	398
2018	IC-8 Channel CMOS/TTL Input Driver	C2	156	398
2019	IC-8 Channel CMOS/PMOS Input Driver	C2	156	398
2020	IC-8 Channel CMOS/TTL Input Driver	C2	156	398
2021	IC-8 Digit/Segment Display Driver	C3	156	398
2022	IC-8 Digit/Segment Display Driver	C3	156	398
2023	IC-7 Segment Display Driver	C4	156	397
2024	IC-2 Digit BCD to 7 Segment Decoder Driver	C5	156	400
2040	IC-7 Stage Freq Divider	C6	157	396
4055B	IC-CMOS, BCD-7 Segment Decoder Driver	--	124	--
4511B	IC-CMOS, BCD-7 Segment Latch Decoder Driver	--	126	--

ECG No.	Description	Ckt. Logic Diag. No.	Page No.	Fig. No.
7441	IC-TTL, 1-of-10 Decoder Driver	--	135	--
7445	IC-TTL, BCD to Decimal Decoder Driver - 30V	--	135	--
7446	IC-TTL, BCD to 7 Segment Decoder Driver - 30V	--	135	--
7447	IC-TTL, BCD to 7 Segment Decoder Driver - 15V	--	135	--
7448	IC-TTL, BCD to 7 Segment Decoder Driver	--	135	--
9676	IC-HTL, BCD to Decimal Decoder Driver	--	150	--
74141	IC-TTL, BCD to Decimal Decoder Driver	--	140	--
74145	IC-TTL, BCD to Decimal Decoder Driver	--	140	--
75450B	IC-Dual Peripheral AND Driver	C7	157	396
75451B	IC-Dual Peripheral AND Driver	C8	157	395
75452B	IC-Dual Peripheral NAND Driver	C8	157	395
75453B	IC-Dual Peripheral OR Driver	C8	157	395
75454B	IC-Dual Peripheral NOR Driver	C8	157	395
75491B	IC-4 Segment MOS to LED Anode Driver	C9	157	396
75492B	IC-6 Digit MOS to LED Cathode Driver	C10	157	396
75493	IC-4 Segment MOS to LED Anode Driver	C11	157	397
75494	IC-6 Digit MOS to LED Cathode Driver	C12	157	397
75497	IC-7 Digit MOS to LED Cathode Driver	C13	157	397
75498	IC-9 Digit MOS to LED Cathode Driver	C14	157	399

Interface IC Circuits

Diag. C1 — Fig. 397

ECG
2011
2012
2013
2014
2015

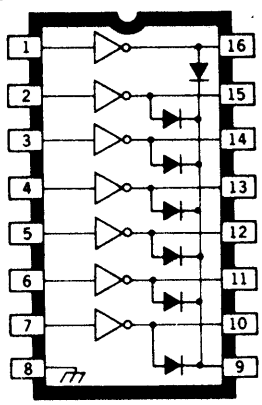

Diag. C2 — Fig. 398

ECG
2016
2017
2018
2019
2020

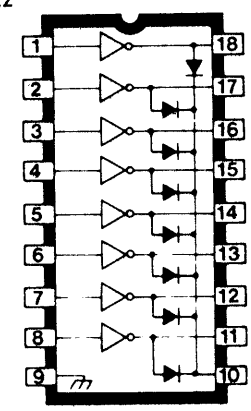

Diag. C3 — Fig. 398

ECG
2021
2022

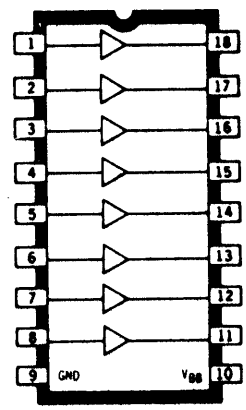

Diag. C4 — Fig. 397

ECG
2023

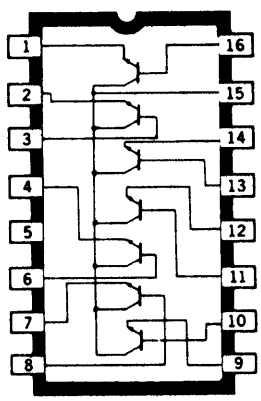

Diag. C5 — Fig. 400

ECG
2024

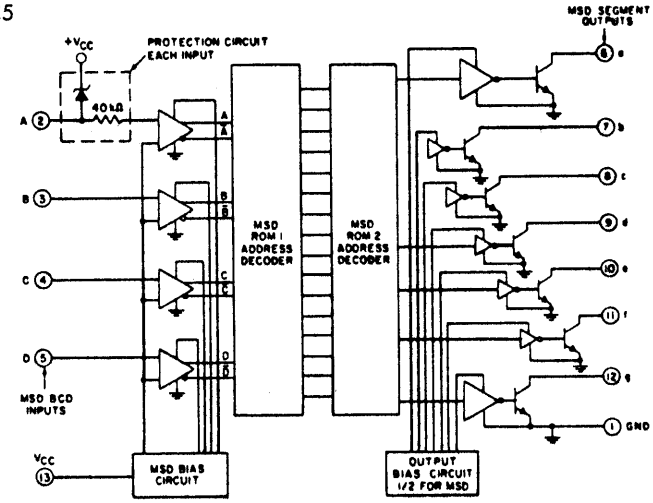

Interface IC Circuits (cont'd)

Diag. C6 Fig. 396

ECG 2040

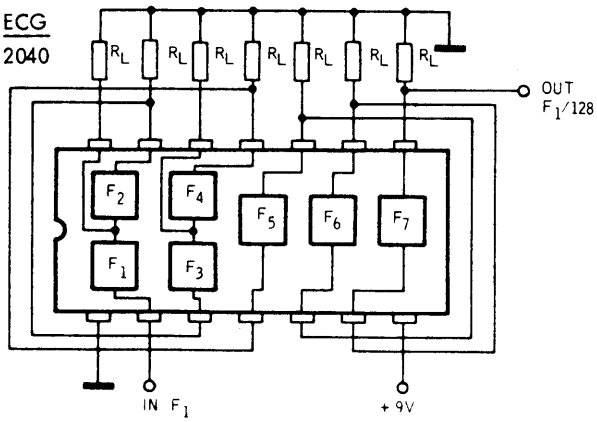

Diag. C7 Fig. 396

ECG 75450B

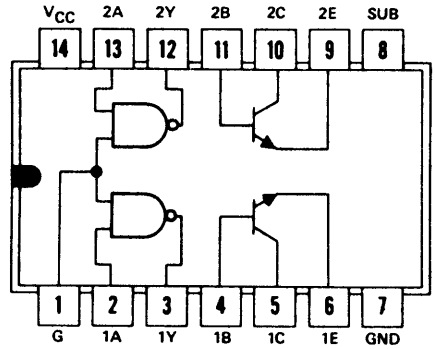

Diag. C8 Fig. 395

ECG 75451B 75453B 75452B 75454B

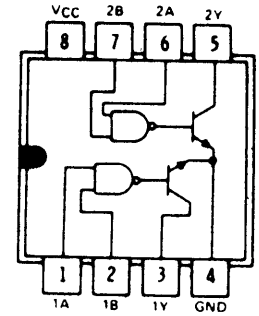

Diag. C9 Fig. 396

ECG 75491B

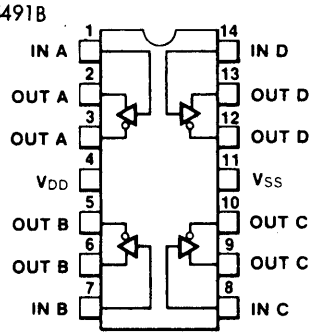

Diag. C10 Fig. 396

ECG 75492B

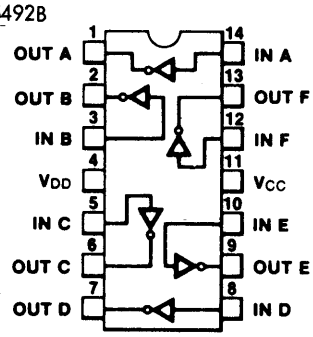

Diag. C11 Fig. 397

ECG 75493

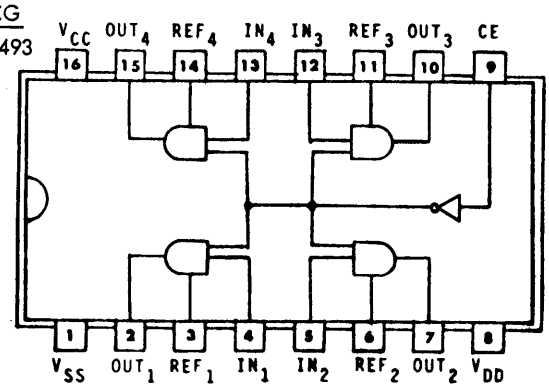

Diag. C12 Fig. 397

ECG 75494

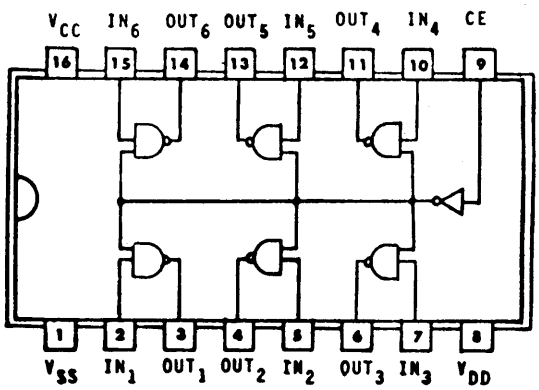

Diag. C13 Fig. 397

ECG 75497

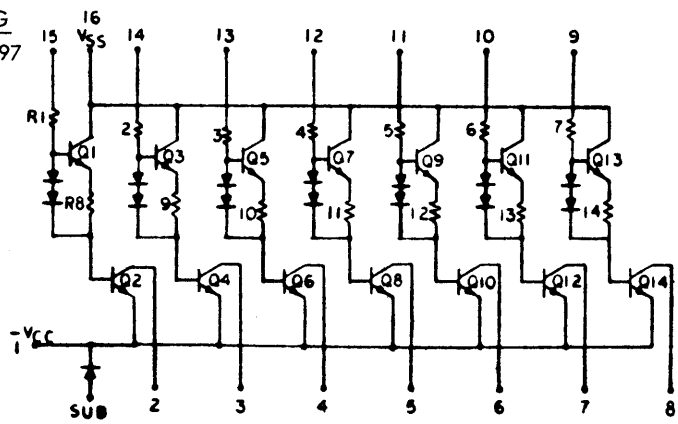

Diag. C14 Fig. 399

ECG 75498

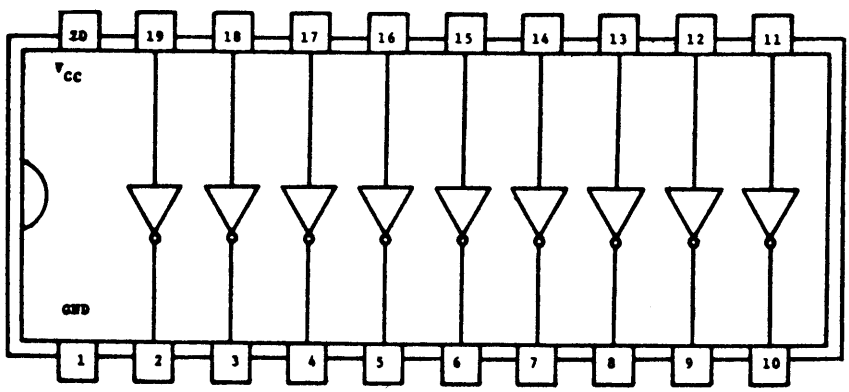

Interface IC Outlines

Fig. 395

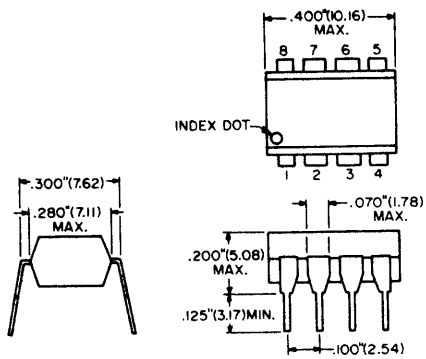

Fig. 396

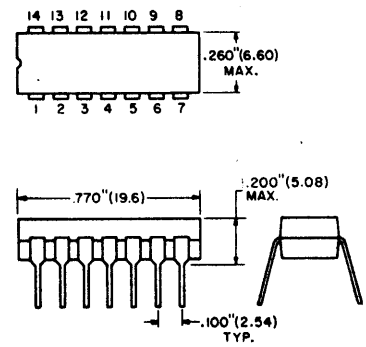

Fig. 397

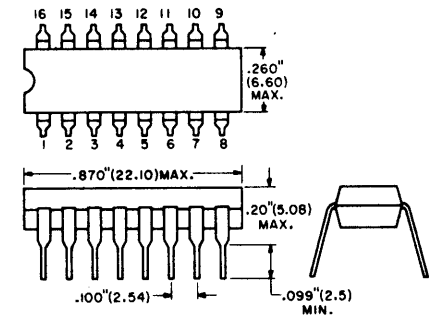

Fig. 398

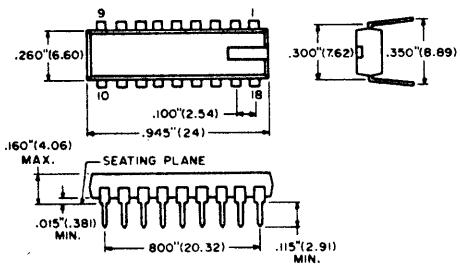

Fig. 399

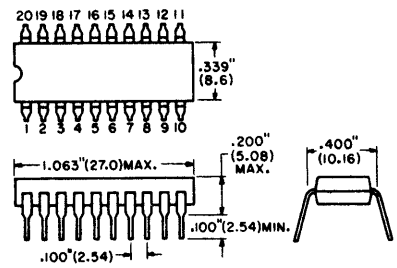

Fig. 400

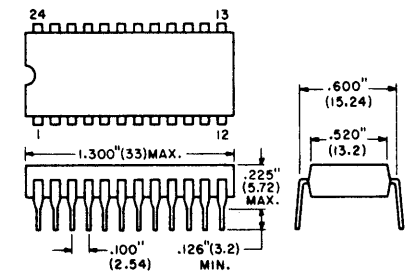

Dual inline plastic cases may have a round indentation on top surface for indexing in place of notched edge.

Miscellaneous Integrated Circuits

ECG9200 Fig. 410

I^2L Freq Divider for VCR

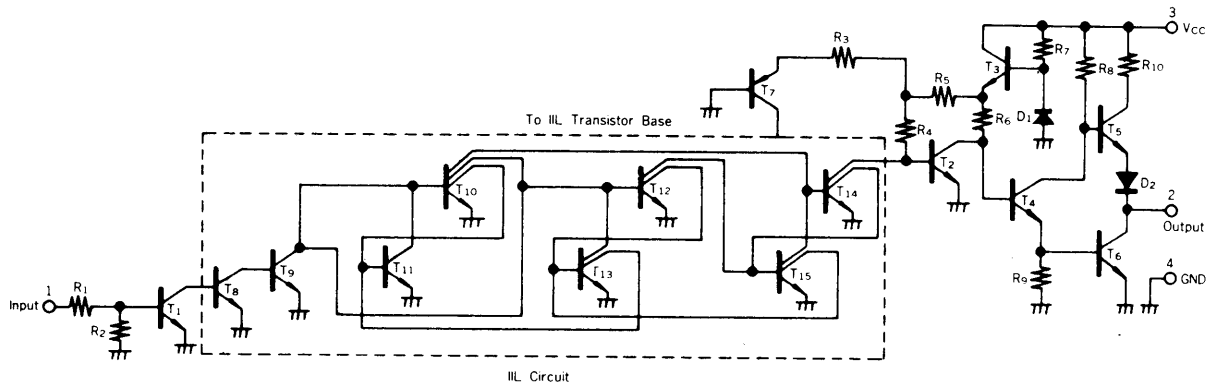

ECG9400 Fig. 411

Pulse Processor for VCR

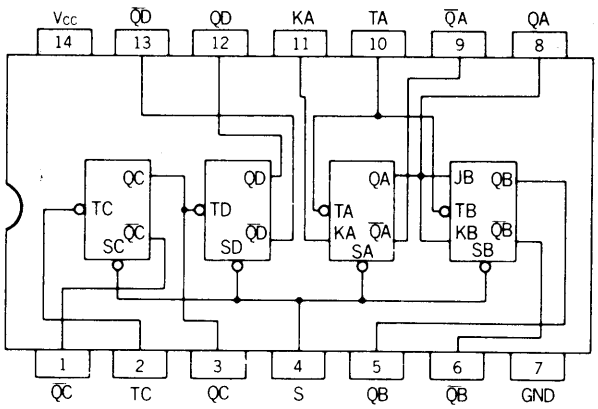

ECG9401 Fig. 411

Monostable Multivibrator for VCR

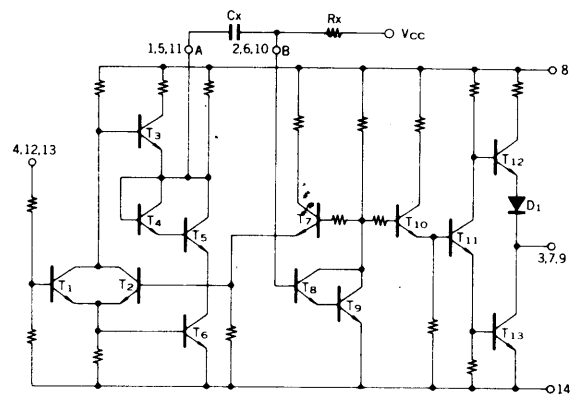

Outlines

Fig. 410

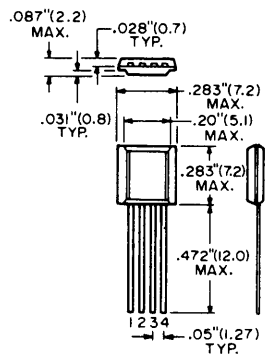

Fig. 411

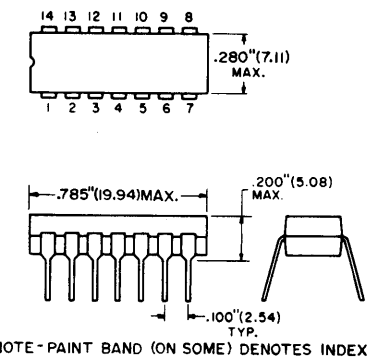

NOTE - PAINT BAND (ON SOME) DENOTES INDEX

Dual inline plastic cases may have a round indentation on top surface for indexing in place of notched edge.

Accessories

Transistor Heat Sinks and Compound

ECG400	1.9 W Heat Sink (2/Pkg) for TO-5 Style Transistors
ECG401	3.0 W Heat Sink (2/Pkg) for TO-5 Style Transistors
ECG402	Heat Sink (2/Pkg) for Plastic Power Transistors
ECG403	Heat Sink (2/Pkg) for Plastic Power Transistors
ECG404	Heat Sink for TO-66 Style Transistors
ECG405	Heat Sink for TO-3 Style Transistors
ECG410	Heat Sink (2/Pkg) for TO-1 Style Transistors
ECG411	Stud-Mount Heat Sink (2/Pkg) for TO-5 Style Transistors
ECG412	Heat Sink (2/Pkg) for TO-18 Style Transistors
ECG424	Heat Sink Compound, 1-oz.
ECG427	TO-39 and TO-5 Heat Sink Kit Heat Sink, 2 Bushings, 1 Mica

Transistor Insulator Kits

Each Kit includes Mica Insulator and Nylon Bushing(s)

ECG413	Insulator Kit for TO-3 Style Transistors
ECG414	Insulator Kit for TO-36 Style Transistors
ECG415	Insulator Kit for TO-66 Style Transistors
ECG422	Insulator Kit for "Plastic TO-66" Transistors (ECG152, ECG153, ECG196, ECG197)

Transistor Sockets

ECG203	Saddle-Mount, Low-Power Transistor Socket
ECG209	TO-3 Power Transistor Socket
ECG417	3-Pin Transistor Socket for TO-18 Pin Circle (2/Pkg)
ECG418	4-Pin Transistor Socket for TO-18 Pin Circle (2/Pkg)
ECG419	3-Pin Transistor Socket for TO-5 Pin Circle (2/Pkg)
ECG420	4-Pin Transistor Socket for TO-5 Pin Circle (2/Pkg)
ECG421	TO-66 Power Transistor Socket (2/Pkg)

Integrated Circuit Sockets

ECG407	8-Pin Integrated Circuit Socket (2/Pkg)
ECG408	10-Pin Integrated Circuit Socket (2/Pkg)
ECG409	14-Pin Integrated Circuit Socket (2/Pkg) (Dual-Inline)
ECG416	16-Pin Dual-Inline Socket (2/Pkg)
ECG423	8-Pin Mini-Dip (2/Pkg)
ECG428	24-Pin Integrated Circuit Socket (2/Pkg)
ECG429	28-Pin Integrated Circuit Socket (2/Pkg)

Metric Hardware

ECG426	Metric Hardware Kit of 3mm, Nuts, Bolts, etc.

Transistor Heat Sinks and Compound Outlines

ECG400 Fig. 425

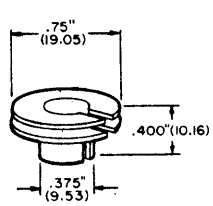

ECG401 Fig. 426

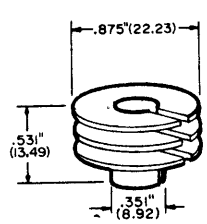

ECG402 Fig. 427

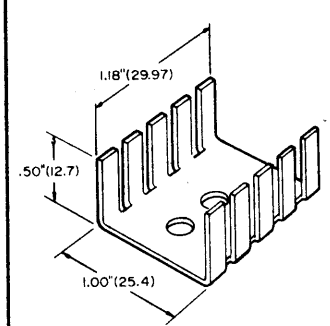

ECG403 Fig. 428

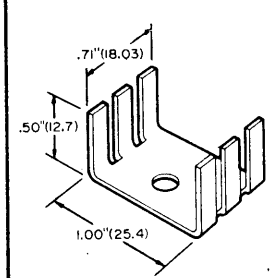

ECG404 Fig. 429

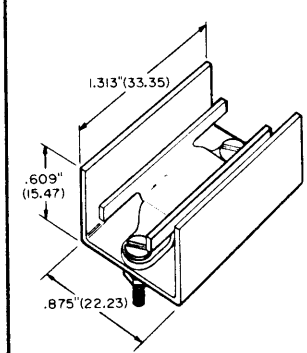

ECG405 Fig. 430

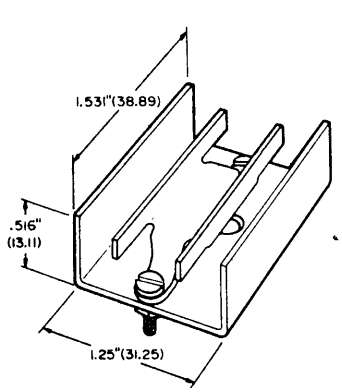

ECG410 Fig. 431

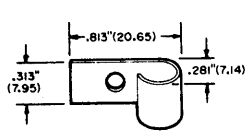

ECG411 Fig. 432

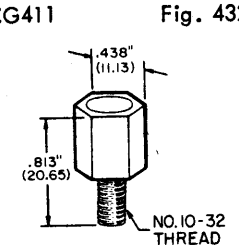

ECG412 Fig. 433

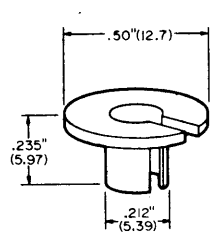

ECG427 Fig. 434

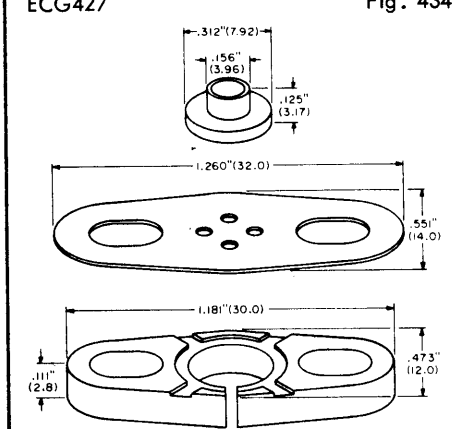

Transistor and Integrated Circuit Sockets Outlines

ECG203 Fig. 435

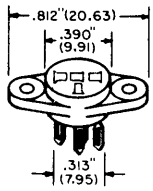

ECG209 Fig. 436

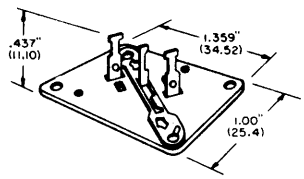

ECG407 Fig. 437

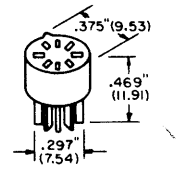

ECG408 Fig. 438

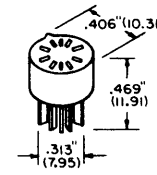

ECG409 Fig. 439

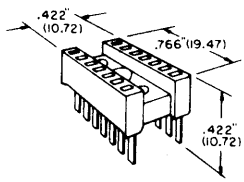

ECG416 Fig. 440

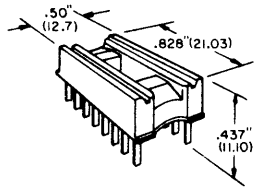

ECG417 Fig. 441

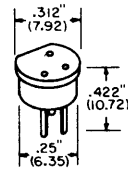

ECG418 Fig. 442

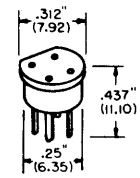

ECG419 Fig. 443

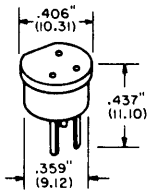

ECG420 Fig. 444

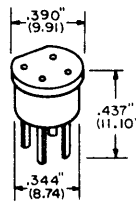

ECG421 Fig. 445

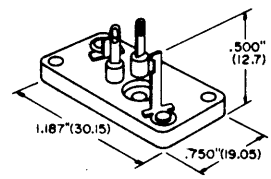

ECG423 Fig. 446

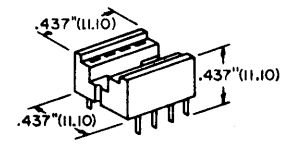

ECG428 Fig. 447

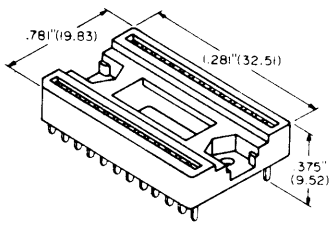

ECG429 Fig. 448

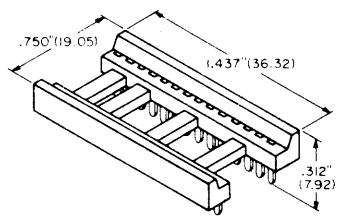

REPLACEMENT DIRECTORY

To Be Replaced	ECG Replacement
0000000FR2	116
0000000FRI	116
0000000MV4	117
0000000S15	116
0000000SD1	116
0000001N60	109
0000001OD1	116
000000DG13	174
000000DS17	116(2)
000000DS18	116(2)
000000DS38	116
000000SD1A	506
000000SD1AB	116
000000SD1AB/(Boost)	506
000000SD1Y	116
000000SD46	109
000000SV31	158
000000SZT8	138A
000001S188	109
000001S330	135A
000001S331	5070A
000001S334	139A
000001S990	177
000002SB22	102A
0000010DC1	116
00000DS13	199
00000DS18	116
00000DS131	116
00000DS410	177
00000FR202	116
00000MZ206	136A
00000S1B01	116
00000WZ090	139A
0000-00011-046	177
0000-00011-049	123A
0000-00011-050	184
0000-00011-053	220
0000-00011-054	132
0000-00011-055	132
00001N60	109
00001S188	109
00001S188AM	109
00001S330A	5010A
00001S334	139A
00001S446D	109
00001S1210	177
00001S1555	177
00001S1849	116(2)
00001S1849R	116(2)
00001S2076	177
00001S4460	109
00002S606	107
00002SA101	126
00002SA202	102A
00002SA550	151A
00002SA609	159
00002SB22	102A
00002SB185	102A
00002SB185-0	102A
00002SB186	102A
00002SB186-0	102A
00002SB187	102A
00002SB303	102A
00002SB303-0	102A
00002SB405	158
00002SB435	153
00002SB460	107
00002SB474	226
00002SB481	131MP
00002SB492	176
00002SC373	123A
00002SC460	107
00002SC460A	108
00002SC460B	108
00002SC460C	108
00002SC461	108
00002SC492	176
00002SC535	107
00002SC536	199
00002SC537	123A
00002SC606	108
00002SC609	195A
00002SC644	199
00002SC668	108
00002SC735	123A
00002SC772	107
00002SC828	123A
00002SC829	107
00002SC838	123A
00002SC858	199
00002SC870	123A
00002SC870A	123A
00002SC870B	123A
00002SC870C	123A
00002SC929	199

To Be Replaced	ECG Replacement
00002SC930	199
00002SC945	199
00002SC968	123
00002SD235	152
00002SD261	192
000010DC1R	116(2)
000062	129
0000101	126
0000102	126
0000103	102A
0000104	102A
000071090	131
000071120	187
000071130	187A
000071131	187A
000071150	159
000071151	159
000072020	116
000072050	116
000072090	109
000072130	177
000072150	139A
000072160	109
000072180	5072A
000072190	139A
000073070	199
000073080	199
000073090	123A
000073100	123A
000073110	128
000073120	123A
000073130	123A
000073140	229
000073230	123A
000073231	123A
000073280	186
000073290	123A
000073300	192
000073301	192
000073302	192
000073303	192
000073305	192
000073310	123A
000073320	186
000073332	123A
000073333	123A
000073350	199
000073351	199
000073360	199
000073361	199
000073373	199
000073374	199
000073380	186
000073381	186A
000073390	123A
000073391	123A
000074010	1006
000074020	1045
000074030	1142
0000DS410	177
0000DS410R	177
0000FR202	116
0000HA1306	1029
0000LA1201	1003
0000LA1201B	1003
0000LD3000	1015
0000SD1	109
0000SD46	109
0000WZ090	139A
000-04	123A
0001S49	116
0001S188	109
0001S188AM	109
0001S334	139A
0001S2144Z	177
0002SB186-0	102A
0002SB187	102A
0002SB187(Red)	102A
0002SB303-0	102A
0002SB405	158
0002SB405R	158
0002SC373	123A
0002SC373W	199
0002SC458B	123A
0002SC458C	123A
0002SC531F	123A
0002SC537F	123A
0002SC644R	199
0002SC644S	199
0002SC668D	108
0002SC710B	123A
0002SC710C	123A
0002SC772C	107
0002SC828	123A
0002SC828H	123A

To Be Replaced	ECG Replacement
0002SC828Q	123A
0002SC930D	199
0002SC930E	199
0002SC945Q	199
0002SC968P	128
0002SC1023	107
0002SC1026	107
0002SC1026A	107
0002SC1026B	107
0002SC1026C	107
0002SC1032	107
0002SC1032A	107
0002SC1032B	107
0002SC1032C	107
0002SC1061	152
0002SC1061A	152
0002SC1061B	152
0002SC1061C	152
0002SC1162	184
0002SC1317	123A
0002SC1383	128
0004-003500	116
000546-1	123A
000653	123A
000704	123A
0004201	102A
0004202	102A
0004203	131
000HA1306U	1029
000LA1201	1003
000LA1201B	1003
000LA3300	1005
000LA3301	1006
000LD1020A	1012
000RS1542	116
000SD-1AUF	177
000WG1010	177
00	199
001	6400
001-0000-00	109
001-00	123A
001-0010-00	109
001-0020-00	110
001-0020-00(Germanium)	109
001-0020-00(Silicon)	177
001-0022-00	109
001-0036	720
001-0072-00	125
001-0077-00	116
001-0081	109
001-0081-00	117
001-0082-00	5071A
001-0091	1140
001-0095-00	177
001-0095-02	519
001-0099-00	138A
001-0099-01	138A
001-0099-02	138A
001-02	159
001-03	159
001-04	159
001-028-000	909
001-0101-01	5073A
001-0112-00	519
001-0125-00	177
001-0127-00	140A
001-0130-00	613
001-0151-00	177
001-0151-01	177
001-0152-00	5072A
001-0153-00	116
001-0160-00	614
001-0161-00	5072A
001-0163-02	135A
001-0163-04	136A
001-0163-13	5072A
001-0163-15	139A
001-0176-00	614
001-01101-0	101
001-01202-1	100
001-01203-1	100
001-01204-0	104
001-01205-0	104
001-01205-1	104
001-01206-0	102
001-01501-0	109
001-02010	158
001-02011	123
001-02020	123A
001-02101-0	123A
001-02101-1	123A
001-02102-0	123A
001-02103-0	123A
001-02104-0	123A
001-02105-0	123A

To Be Replaced	ECG Replacement
001-02106-0	123A
001-02107-0	123A
001-02108-0	123A
001-02109-0	123A
001-02110-0	123A
001-02111-1	123A
001-02113-2	123A
001-02113-3	123A
001-02113-4	123A
001-02113-5	123A
001-02114-0	198
001-02115-0	124
001-02116-0	124
001-02117-2	193
001-02119-0	128
001-02121-0	123A
001-02201-0	159
001-02303-0	135A
001-02303-3	137A
001-02303-4	145A
001-02405-0	116
001-02405-1	116
001-02405-2	116
001-02406-0	156
001-02406-1	156
001-02601-0	116
001-02603-0	116
001-011010	101
001-012011	158
001-012021	158
001-012031	158
001-012040	104
001-012050	104
001-012051	104
001-012060	102A
001-015010	109
001-021010	123
001-021020	123A
001-021030	123A
001-021040	123
001-021050	123
001-021060	123
001-021070	123A
001-021080	123A
001-021090	123
001-021100	154
001-021110	123
001-021111	123
001-021132	123A
001-021133	123
001-021134	123A
001-021135	123A
001-021140	124
001-021150	124
001-021151	124
001-021160	124
001-021162	124
001-021170	234
001-021171	234
001-021172	234
001-021173	234
001-021190	128
001-021210	123A
001-021232	123A
001-021270	130
001-022010	159
001-022020	159
001-022050	6402
001-023020	5181A
001-023021	5198A
001-023030	5069A
001-023031	5080A
001-023032	5079A
001-023033	136A
001-023034	145A
001-023035	140A
001-023036	5069A
001-023037	142A
001-023038	5075A
001-023041	5130A
001-023042	5120A
001-024050	116
001-024051	116
001-024052	116
001-024061	156
001-024070	5980
001-026010	519
001-026030	177
001-026050	6402
001-026060	177
001-027030	132
001-2(SYL)	229
001-533-00	159
001-21011	123A
001-226010	519

To Be Replaced	ECG Replacement
001B(McIntosh)	726
001(McIntosh)	726
002-005100	102A
002-006300	126
002-006500	123
002-006600	102A
002-006800	102A
002-006900	102A
002-007000	104
002-007100	160
002-007200	160
002-007300	102A
002-007400	160
002-008100	104
002-008400	102A
002-008800	121
002-009100	124
002-009500	123A
002-009501	123A
002-009502	123A
002-009600	108
002-009601	108
002-009701	121
002-009800	159
002-009900	123A
002-03	123A
002-0105-00	106
002-010100	121
002-010300	159
002-010300-6	129
002-010300A	159
002-010400	123A
002-010500	159
002-010500A	159
002-010600	128
002-010700	129
002-010800	123A
002-010900	159
002-010900A	159
002-011000	102A
002-011400	161
002-011500	161
002-011600	126
002-011700	103A
002-011800	176
002-011900	102A
002-012000	123
002-012100	185
002-012200	184
002-012300	153
002-012400	152
002-012500	128
002-012600	129
002-012700	121
002-012700-12	127
002-012800	159
002-012800A	159
002-1(SYL)	196
002-2(SYL)	196
002-3(SYL)	241
002-4(SYL)	196
002-4(Sylvania)	196
002-5(SYL)	241
002-104-000	199
002-9501	199
002-9502	199
002-9502-12	199
002-9601	108
002-9601-12	108
002-9700	121
002-9800-12	129
002-9800-A	159
002-11700	103A
002-11800	102A
002-11900	102A
002-12000	123A
002D235RY	152
002(McIntosh)	710
002SA203AA	126
002SB185AA	102A
002SB435RY	153
002SB18500	102A
002SC1209C	297
002SC7350Y	289
002SD235RY	152
003	110MP
003-00	229
003-001	116
003-00200	110MP
003-002200	113
003-004200	110
003-005400	109

To Be Replaced	ECG Replacement
003-006700	109
003-007500	110MP
003-009000	109
003-009100	145A
003-009200	142A
003-009400	116
003-009600	109,110
003-009700	142A
003-009900	116
003-009900(Airline)	506
003-01	229
003-02000	110MP
003-010000	142A
003-0(SYL)	5400
003-1(METAL)	128
003-1(METAL)(SYL)	128
003-1(Plastic)(SYL)	184 or 188
003-H03	102
003(McIntosh)	724
004	1098
004-00	123A
004-001	179
004-002000	116
004-002700	116
004-002800	116
004-002900	113
004-003000	116
004-003100	119
004-003200	118
004-003300	116
004-003400	116
004-003500	506
004-003600	116
004-003700	120
004-003900	116
004-004000	116
004-004100	116
004-00(Last IF)	233
004-03100	119
004-03200	118
004-03300	116
004-03500	116
004-03600	116
004-03700	116
004-1(PNP)	189
004-1A(SYL)	185
004-1(Plastic)(SYL)	185 or 189
004-2(SYL)	152
004-175-9-001	601
004-8000	121
004(McIntosh)	725
004(Toyota)	1098
005-02	123A
005-010400	522
005-010800	522
005-010900	522
005-011000	522
005-011200	522
005-012200	534
005-013500	532
005-013600	531
005-1(SYL)	291
005(McIntosh)	724
006-0000004	519
006-0000134	123A
006-0000135	159
006-0000146	7400
006-0000147	7410
006-0000151	7472
006-0000162	74107
006-0004270-001	909D
006-0004443	133
006-0004779	9109
006-0004956	129
006-0005191	129
006-0005545	9112
006-00055182	234
006-02	159
006-6400902	519
006-6450032	123A
006B2M	722
007-00	171
007-0030	175
007-0040-00	130
007-0051	128
007-0074	175
007-0112	152
007-0112-03	152
007-0112-05	152
007-0214-00	133
007-0214-01	133
007-112-04	152
007-6016-00	519

To Be Replaced	ECG Replacement
007-6060-00	519
007-16687C1	911
007-25005-01	519
007-25013-01	519
007-25016-01	519
007-74004-01	159
007-74008-01	159
007-74655-02	123A
007-74655-06	123A
007-74659-01	128
007-74659-04	128
007-74659-06	128
007-74661-01	123A
007-166870i	911
007-1668601	910
007-1668602	910D
007-1669602	941M
007-1669901	923D
007-1681301	9112
007-1695001	7400
007-1695101	7420
007-1695301	7404
007-1695701	7440
007-1695901	7410
007-1696001	7485
007-1696101	7414
007-1696201	7402
007-1696301	7437
007-1696701	7411
007-1696801	74145
007-1696901	7406
007-1697701	74180
007-1697801	7441
007-1698301	74192
007-1698401	74193
007-1698901	7450
007-1699201	7411
007-1699301	7408
007-1699401	7403
007-1699801	7474
007-7450301	130
007-7466101	123A
008-024-00	116
009-000	165
009-00	165
009-1(SYL)	161
009-301003	102A
0012-911	116
0013-911	116
0014-911	177
0015-911	116
0019-003485	175
0036-001	159
0043-004793	722
0055	129
0086	148A
0087	146A
00234-B	175
00415	159
001422	123A
003002	109
003007	116
003008	177
003012	116
003016	109
003017	519
003023	116
003026	116
003102	139A
003111	139A
003113	135A
003404	294
003429	123AP
003430	123AP
003435	299
003449	229
003460	199
003461	199
003462	107
003463	229
003465	199
003473	236
003501	1003
003515	801
003516	1217
003522	1052
003526	1170
003536	1194
003542	7403
004567	116
004746	159
004763	177
004781	197
004792	107
004795	726

Notes For Use of Replacement Directory:

(1) Numbers in ( ) indicate the number of replacement devices required to replace original type.

(2) / Numbers indicate ECG Transistor Replacement and ECG Heat Sink recommended for this application.

(3) (CP)—Complementary Pair.

(4) When a specific device part number is not listed in the directory, refer to the technical data for the ECG devices of that type to find an equivalent replacement.

To Be Replaced	ECG Replacement
004887	142A
005575	181
0011193	5072A
0012060	109
0015107	506
0022481	131
0023645	107
0023828	123A
0023829	107
0033111	5018A
0099201-325	5081A
0099202-128	147A
0099203-005	116
0099203-007	116
00351980	128
00352080	123A
00444028-010	123A
00444028-014	123A
004440028-002	123A
004440028-006	123A
004440028-007	123A
004440028-008	123A
004440028-010	123A
004440028-014	123A
0063050118	116
00HA1306P-U	1029
0-008	128
0-008(Ampex)	129
0-009	129
01	159
01-0301-031383383	293
01-010377	294
01-010473	153
01-010495	159
01-010509	290
01-010562	290
01-010564	234
01-010719	290
01-010733	294
01-010844	129
01-010950	159
01-017190	290
01-021674	107
01-030373	199
01-030380	229
01-030388	233
01-030394	229
01-030454	289
01-030458	123A
01-030460	233
01-030473	153
01-030495	295
01-030508	175
01-030535	229
01-030536	199
01-030682	161
01-030710	123AP
01-030711	199
01-030719	290
01-030732	199
01-030733	294
01-030734	128
01-030735	289
01-030784	229
01-030828	199
01-030829	123A
01-030900	199
01-030930	229
01-030945	199
01-031018	299
01-031047	229
01-031096	186A
01-031103	154
01-031166	297
01-031173	152
01-031239	237
01-031293	233
01-031306	235
01-031307	236
01-031317	289
01-031318	297
01-031327	199
01-031342	229
01-031359	229
01-031364	123A
01-031419	152
01-031566	157
01-031674	229
01-031675	229
01-031678	235
01-031687	123A
01-031730	316
01-031756	198
01-031760	306
01-031846	306
01-031855	108
01-031909	235
01-031957	295
01-031973	315
01-031974	235
01-032028	295
01-032029	235
01-032057	319
01-032076	123AP
01-032091	295
01-032092	235
01-040234	152
01-040243	152
01-040313	196
01-040325	152
01-070030	132
01-070049	312
01-080045	222
01-01010495	159
01-1201-0	102A

To Be Replaced	ECG Replacement
01-1205-OP	179
01-1501	177
01-2101	123A
01-2101-0	123A
01-2102	123A
01-2104	123A
01-2105	123A
01-2106	123A
01-2107	123A
01-2108	123A
01-2109	123A
01-2110	128
01-2111	128
01-2114	128
01-2303-0	5080A
01-2303-1	5080A
01-2303-3	5071A
01-2405-0	116
01-2405-1	116
01-2405-2	116
01-2406-1	116
01-2601	177
01-2601-0	177
01-2603-0	177
01-9011-52221-3	123A
01-9013-72221-3	123A
01-9014-22221-3	123A
01-9016-42221-3	108
01-9018-62221-3	108
01-57291	152
01-117001	123A
01-117005	108
01-117006	108
01-121033	312
01-209014	123A
01-209022	288
01-209023	123A
01-349426	229
01-349623	123A
01-349634	199
01-349681	159
01-571821	123A
01-571921	124
01-571941	123A
01-572588	159
01-572791	152
01-572811	290
01-572814	289
01-572831	154
01-651350	199
01F	703A
01F-SL8020	703A
02-01062	1249
02-091125	712
02-091156	801
02-091342	1239
02-091366	1261
02-1001-1221-3	109
02-1006-2/2221-3	177
02-1078-01	123A
02-3002-2/2221-3	116
02-5004	5697
02-5004-6	5695
02-5184-11	5675
02-121365	712
02-124400	1193
02-151496	973
02-161521	1170
02-173710	1194
02-173756	1271
02-181310	801
02-235104	1255
02-257130	1234
02-257205	1155
02-257310	1192
02-263001	1192
02-280006	1247
02-280007	1262
02-300078	977
02-300577	1082
02-301020	1160
02-343065	712
02-350858	1198
02-360002	1167
02-373001	1192
02-435624	1253
02-561171	791
02-561201	783
02-561410	714
02-781050	977
02P1B	159
02P1BC	189
02SC458LGC	123AP
02X12GR	142A
02Z5.6	136A
02Z5.6A	136A
02Z6.2	137A
02Z-6.2A	137A
02Z6.2A	137A
02Z6.2W	137A
02Z6.8A	5071A
02Z7.5A	138A
02Z8.2A	5072A
02Z9.1	5018A
02Z-9.1A	139A
02Z9.1A	139A
02Z-9.1A	139A
02Z-10A	140A
02Z10A	140A
02Z10A-U	140A
02Z11A	5074A
02Z12A	142A
02Z12GR	5021A
02Z13A	143A
02Z15A	145A

To Be Replaced	ECG Replacement
02Z16A	5075A
02Z18A	5077A
02Z24A	5081A
02Z62A	137A
02Z102A	139A
03-0018-0	116
03-0018-6	124
03-0020-0	102
03-0021-0	109
03-0022	102
03-0023-0	102
03-0063-04	177
03-034-042	519
03-57-001	126
03-57-002	126
03-57-003	160
03-57-101	126
03-57-102	160
03-57-200	160
03-57-201	126
03-57-202	160
03-57-301	102
03-57-302	102A
03-57-304	102
03-57-501	121
03-156B	102A
03-160	109
03-460C	108
03-461B	108
03-535A	108
03-1585/G	123A
03-3016	116
03-931051	109
03-931601	116
03-931609	116
03-931641	177
03-931642	177
03-931645	177
03-931771	109
03-931971	116
03-933935	5086A
03-933943	142A
03-936011	506
03A01	235
03A02	293
03A03	123A
03A04	290
03A05	123A
03A06	294
03A07	123A
03A09	312
03A10	222
03A10	222
03A12	123AP
03AI0	222
03AO2	123A
03AO3	123A
03AO5	108
03AO6	294
03AO7	123A
03AO9	312
04-00072-01	103A
04-000653	519
04-000655-1	519
04-00156-03	158
04-00460-03	123A
04-00461-02	107
04-00535-02	107
04-00535-06	108
04-01585-06	123A
04-01585-07	123A
04-01585-08	107
04-02090-02	123A
04-07150-01	187A
04-2	610
04-57-303	102
04-8054-3	116
04-8054-4	116
04-8054-7	116
04-11620-01	186A
04-15850-06	107
04-38190-01	132
04-46000-02	229
04-67000-01	159
04-440032-002	159
04-440032-008	159
04A1	121
04A1-12	121
04A-1-12-7	121
04S06	235
04S4	5463
04S11	152
04SO5	302
04SO6	235
0s4.000654	177
05-00000-00	109
05-000002	116
05-00060-00	109
05-00060-01	109
05-00160-01	109
05-02160-01	177
05-03016-01	116
05-04001-02	116
05-04800-02	5072A
05-060052	135A
05-060110	5074A
05-69669-01	5071A
05-112404	506
05-150046	605
05-170060	109
05-174002	116
05-175392	5801
05-180188	109
05-181555	177
05-181885	116

To Be Replaced	ECG Replacement
05-182075	519
05-182076	177
05-182236	611
05-182473	519
05-182687	612
05-182688	614
05-190060	109
05-200410	612
05-320301	610
05-328518	600
05-330150	177
05-331091	139A
05-370201	503
05-470001	605
05-470013	605
05-472209	614
05-480205	135A
05-480306	5070A
05-540082	5072A
05-540094	139A
05-740002	506
05-750001	116
05-750010	116
05-750018	116
05-860091	139A
05-900006	116
05-900009	506
05-950081	5072A
05-950177	5077A
05-990051	159A
05-990086	139A
05-990094	139A
05A03	109
05A06	519
05A07	116
05A08	614
05A09	156
05A01	519
05A03	109
05A05	519
05A08	614
05A09	156
05B1Z	712
05B2Z	712
05V-50	116
05Z075UNI	138A
05Z5.1L	135A
05Z6.2	137A
05Z-6.2L	137A
05Z6.8	5071A
05Z7.5	138A
05Z7.5UNI	138A
05Z8.2	5072A
05Z8.2U	5072A
05Z9.1	139A
05Z9.1L	139A
05Z-9.1U	139A
05Z10	140A
05Z-10	140A
05Z10A-U	140A
05Z11	5074A
05Z12	142A
05Z13	143A
05Z15	145A
05Z16	5075A
05Z18	5077A
05Z24	5081A
06B1M	722
06B1Z	722
06B2Z	722
06B-3	121MP
06B-3-12	121MP
06B-3-12-7	121MP
06P1C	121
07-07113	290
07-07119	102A
07-07124	123A
07-07125	123A
07-07129	229
07-07139	123A
07-07141	237
07-07156	123A
07-07158	132
07-07159	133
07-07161	724
07-07163	289
07-07164	237
07-07165	186A
07-07166	199
07-07167	103A
07-1075-01	102A
07-1075-02	102A
07-1156-03	102A
07-1458-85	123A
07-1777-03	283
07-2012-04	102A
07-3012-04	102A
07-3015-05	102A
07-3080-06	160
07-3350-57	126
07-4233-19	160
07-4235-13	160
07-4235-73	160
07-5134-14	109
07-5134-14A	109
07-5134-14B	109
07-5134-14C	109
07-5160-15	110
07-5160-15A	112
07-5160-15B	112
07-5160-15C	112
07-5331-86	137A
07-5331-86A	136A
07-5331-86B	136A
07-5331-86C	136A

To Be Replaced	ECG Replacement
07-5331-86D	136A
07-6015-16	102A
07B1Z	708
07B2B	708
07B2Z	788
07B3B	708
07B3C	708
07B3D	708
07B3M	708
07B3Z	708
07B27	708
08	139A
08-0821	116
08-08111	109
08-08112	110MP
08-08117	177
08-08119	177
08-08120	145A
08-08122	116
08-08125	139A
08A159-007	177
08A161-001	HiDiv-1
08A161-002	HiDiv-1
08A161-003	HiDiv-1
08A165-001	177
08A8300-2	123A
08B1M	725
08B2D	725
08B2M	725
08P-2	102A
08P-2-12-7	102A
08P-12-12	102A
09-004	718
09-005	703A
09-006	703A
09-007	750
09-002012	123A
09-010	746
09-011	720
09-017	722
09-018	788
09-033006	103A
09-306-083	116
09-30063	159
09-30104B	102A
09-30126	102A
09-30313	102A
09-30318	152
09-30319	192
09-30501	199
09-30636	110
09-30864	1006
09-32124	108
09-300002	126
09-300005	158
09-300006	126
09-300007	126
09-300011	126
09-300012	126
09-300015	126
09-300016	126
09-300017	102A
09-300021	160
09-300024	160
09-300026	234
09-300027	126
09-300028	160
09-300029	126
09-300036	234
09-300037	159
09-300037A	121
09-300043	129
09-300059	159
09-300061	159
09-300062	159
09-300063	159
09-300064	290
09-300067	187
09-300068	187
09-300070	290
09-300071	294
09-300072	193
09-300073	187A
09-300074	159
09-300076	294
09-300077	159
09-300078	126
09-300079	126
09-300080	290
09-300081	290
09-300090	153
09-300307	159
09-301001	102A
09-301002	102A
09-301002-6	102A
09-301003	102A
09-301004	102A
09-301005	102A
09-301006	102A
09-301007	102A
09-301008	158
09-301008-18	102A
09-301009	102A
09-301010	104
09-301014	158
09-301015	176
09-301016	102A
09-301019	158
09-301020	102A
09-301022	158
09-301023	102A
09-301024	131
09-301025	102A
09-301025-6	102A
09-301026	102A

To Be Replaced	ECG Replacement
09-301027	158
09-301030	226MP
09-301031	176
09-301032	102A
09-301034	131
09-301036	102A
09-301048	102A
09-301050	288
09-301052	121
09-301054	158
09-301056	102A
09-301066	158
09-301071	127
09-301072	102A
09-301073	127
09-301074	102A
09-301075	131
09-301077	153
09-301079	127
09-301081	292
09-302002	229
09-302003	229
09-302004	233
09-302005	108
09-302006	229
09-302007	123A
09-302009	108
09-302010	108
09-302012	123A
09-302014	107
09-302015	195A
09-302016	233
09-302017	108
09-302020	289
09-302030	195A
09-302032	107
09-302033	123A
09-302034	123A
09-302035	195A
09-302036	229
09-302037	229
09-302037(IC)	1006
09-302037(Transistor)	229
09-302038	199
09-302039	123A
09-302040	289
09-302044	107
09-302045	123A
09-302045-12	123A
09-302046	300
09-302050	237
09-302051	237
09-302053	199
09-302054	123A
09-302055	195A
09-302056	237
09-302058	123A
09-302060	108
09-302061	316
09-302062	123A
09-302063	107
09-302068	195A
09-302072	107
09-302073	107
09-302074	123A
09-302075	192
09-302078	123A
09-302079	107
09-302080	186A
09-302081	195A
09-302082	195A
09-302083	152
09-302085	199
09-302086	199
09-302090	128
09-302090(Diode)	177
09-302092	107
09-302093	199
09-302095	229
09-302097	199
09-302099	154
09-302101	123A
09-302102	299
09-302106	123A
09-302107	199
09-302113	186
09-302114	107
09-302115	108
09-302116	192
09-302117	237
09-302118	123A
09-302119	235
09-302121	186A
09-302122	130
09-302123	186A
09-302124	123A
09-302125	199
09-302126	186A
09-302127	199
09-302128	161
09-302129	107
09-302130	194
09-302131	123A
09-302132	152
09-302135	299
09-302136	295
09-302138	107
09-302139	199
09-302140	123A
09-302141	108
09-302142	107
09-302143	107
09-302146	124
09-302148	123A
09-302149	108

To Be Replaced	ECG Replacement
09-302150	287
09-302151	107
09-302152	107
09-302153	123A
09-302155	293
09-302156	124
09-302157	164
09-302158	163A
09-302159	162
09-302160	124
09-302161	193
09-302162	108
09-302164	152
09-302165	123A
09-302166	282
09-302169	237
09-302170	187
09-302171	128
09-302172	123A
09-302173	289
09-302175	123A
09-302176	163A
09-302177	163A
09-302185	124
09-302186	198
09-302187	165
09-302188	286
09-302189	123A
09-302190	108
09-302192	236
09-302193	236
09-302194	199
09-302200	233
09-302201	161
09-302202	315
09-302203	107
09-302204	123A
09-302206	229
09-302207	229
09-302212	295
09-302215	123A
09-302216	107
09-302218	175
09-302219	302
09-302220	107
09-302222	297
09-302224	229
09-302225	229
09-302226	192
09-302227	123A
09-302236	152
09-302237	198
09-302238	238
09-302240	161
09-302241	108
09-302242	229
09-302243	171
09-302245	238
09-302246	165
09-303005	175
09-303006	103A
09-303012	103A
09-303013	103A
09-303018	152
09-303019	192
09-303021	196
09-303022	152
09-303023	103A
09-303025	123A
09-303028	124
09-303029	198
09-303030	103A
09-303031	152
09-303032	152
09-303033	152
09-303034	291
09-303036	287
09-304011	160
09-304012	159
09-304017	132
09-304042	229
09-304043	229
09-304044	123A
09-304044(Last IF)	233
09-304045	123A
09-304046	171
09-304047	159
09-304049	159
09-304050	159
09-304051	159
09-304052	191
09-304055	182
09-304056	165
09-304057	164
09-304058	123A
09-304140	152
09-305006	161
09-305011	161
09-305014	132
09-305021	133
09-305023	133
09-305024	159
09-305031	133
09-305032	312
09-305033	107
09-305034	123A
09-305040	222
09-305041	107
09-305048	199
09-305049	300
09-305050	229
09-305051	229
09-305052	199
09-305058	234
09-305062	123A

To Be Replaced	ECG Replacement
09-305063	123A
09-305064	123A
09-305065	123A
09-305066	123A
09-305067	123A
09-305068	123A
09-305069	108
09-305070	108
09-305071	108
09-305072	108
09-305073	159
09-305074	108
09-305075	129
09-305076	128
09-305077	123A
09-305091	237
09-305092	297
09-305093	229
09-305094	229
09-305095	235
09-305096	229
09-305123	199
09-305126	199
09-305131	102A
09-305132	161
09-305133	133
09-305134	129
09-305135	132
09-305136	235
09-305137	236
09-305138	223
09-305139	123A
09-305140	152
09-305148	123A
09-305149	159
09-305150	287
09-305151	288
09-305152	123A
09-306002	109
09-306009	109
09-306010	109
09-306012	109
09-306019	110
09-306020	109
09-306024	109
09-306024(Zener)	145A
09-306028	174
09-306030	506
09-306031	506
09-306033	116
09-306034	116
09-306036	109
09-306037	109
09-306040	109
09-306042(Rectifier)	116
09-306042(ZENER)	5072A
09-306046	116
09-306047	109
09-306049	109
09-306050	116
09-306051	109
09-306052	5014A
09-306053	156
09-306054	116
09-306055	137A
09-306057	110
09-306059	116
09-306060	177
09-306061	109
09-306062	177
09-306063	116
09-306064	109
09-306073	5070A
09-306077	112
09-306088	116
09-306089	112
09-306091	109
09-306093	109
09-306100	116
09-306101	113
09-306103	116
09-306104	116
09-306106	139A
09-306107	109
09-306108	109
09-306109	136A
09-306110	177
09-306110(Zener)	145A
09-306111	177
09-306112	116
09-306113	177
09-306114	116
09-306115	116
09-306119	116
09-306124	139A
09-306125	116
09-306127	143A
09-306129	177
09-306134	177
09-306135	519
09-306138	116
09-306141	506
09-306144	506
09-306145	177
09-306148	177
09-306149	116
09-306151	177
09-306154	177
09-306157	116
09-306158	139A
09-306159	177
09-306160	116
09-306161	177
09-306162	116
09-306163	177

To Be Replaced	ECG Replacement
09-306165	139A
09-306168	178MP
09-306169	116
09-306170	177
09-306171	177
09-306172	116
09-306173	5022A
09-306176	116
09-306177	116
09-306178	177
09-306179	142A
09-306180	139A
09-306181	138A
09-306183	137A
09-306191	5010A
09-306192	116
09-306193	113
09-306194	139A
09-306195	177
09-306196	5072A
09-306197	138A
09-306198	177
09-306199	177
09-306202	177
09-306205	116
09-306206	177
09-306208	5070A
09-306209	112
09-306210	112
09-306211	177
09-306211(ZENER)	5015A
09-306212	5015A
09-306212(Rectifier)	125
09-306212(Zener)	5015A
09-306213	116
09-306214	116
09-306215	5071A
09-306216	112
09-306219	177
09-306220	177
09-306221	177
09-306222	109
09-306223	177
09-306224	116
09-306226	125
09-306227	156
09-306228	140A
09-306229	110
09-306231	177
09-306232	139A
09-306233	177
09-306235	140A
09-306236	177
09-306237	506
09-306238	5072A
09-306239	139A
09-306241	139A
09-306242	5072A
09-306243	5075A
09-306244	519
09-306245	116
09-306247	139A
09-306248	177
09-306249	116
09-306250	116
09-306254	116
09-306255	116
09-306260	506
09-306263	116
09-306264	116
09-306266	177
09-306268	5075A
09-306274	125
09-306275	139A
09-306276	177
09-306278	144A
09-306283	177
09-306285	116
09-306287	139A
09-306288	177
09-306289	5068A
09-306290	109
09-306291	177
09-306300	116
09-306303	116
09-306309	177
09-306310	505
09-306311	125
09-306312	116
09-306313	177
09-306314	5072A
09-306315	116
09-306323	116
09-306324	5075A
09-306325	5071A
09-306326	177
09-306327	139A
09-306330	109
09-306331	109
09-306332	139A
09-306333	116
09-306334	109
09-306335	110
09-306336	109
09-306339	109
09-306341	116
09-306349	109
09-306350	116
09-306351	139A
09-306353	116
09-306354	5072A
09-306355	5077A
09-306356	5072A
09-306359	611
09-306365	116

To Be Replaced	ECG Replacement
09-306367	145A
09-306368	177
09-306370	109
09-306373	177
09-306375	139A
09-306376	116
09-306377	137A
09-306378	5072A
09-306379	156
09-306380	5067A
09-306381	5072A
09-306382	139A
09-306383	5070A
09-306384	116
09-306389	116
09-306390	177
09-306391	142A
09-306392	506
09-306393	504
09-306394	116
09-306401	139A
09-306417	116
09-306418	506
09-306419	5071A
09-306421	116
09-306422	116
09-306423	506
09-306424	125
09-306425	506
09-306426	177
09-306427	116
09-306428	5074A
09-306429	5074A
09-306430	503
09-306432	116
09-306433	116
09-307039	177
09-307043	116
09-307045	177
09-307055	177
09-307056	601
09-307075	177
09-307080	177
09-307081	177
09-307082	138A
09-307083	177
09-307084	116
09-307085	177
09-307088	5071A
09-307089	177
09-308002	724
09-308003	724
09-308004	703A
09-308008	1003
09-308009	1046
09-308010	726
09-308011	1054
09-308013	703A
09-308017	704
09-308019	703A
09-308021	9946
09-308022	7400
09-308023	1004
09-308024	1021
09-308025	1076
09-308026	1091 *
09-308027	1047
09-308028	1077
09-308029	1086A
09-308030	1089 *
09-308031	1048
09-308033	1045
09-308034	1006
09-308036	1103
09-308037	1029
09-308038	1142
09-308039	704
09-308041	1100
09-308043	1103
09-308044	1120
09-308045	715
09-308046	715
09-308047	790
09-308048	790
09-308049	1019
09-308050	1002
09-308051	1113
09-308052	1082
09-308053	1075A
09-308058	1005
09-308059	1100
09-308061	1097
09-308062	1135
09-308063	1003
09-308064	1006
09-308065	1016
09-308066	1106
09-308067	1107
09-308069	1047
09-308070	1108
09-308071	720
09-308074	4011B
09-308076	1052
09-308077	1012
09-308078	804
09-308079	714
09-308080	1155
09-308083	1049
09-308084	1127
09-308086	1153
09-308089	1004
09-308090	749
09-308094	1243
09-308095	1087
09-308096	1092

To Be Replaced	ECG Replacement
09-308098	712
09-308099	791
09-308100	712
09-308102	1049
09-309006	123A
09-309007	108
09-309012	123A
09-309013	108
09-309023	123A
09-309024	108
09-309027	108
09-309028	108
09-309029	172A
09-309030	193
09-309031	192
09-309032	108
09-309038	159
09-309042	159
09-309049	123A
09-309050	123A
09-309059	199
09-309061	289
09-309062	195A
09-309063	297
09-309064	123A
09-309065	229
09-309069	107
09-309070	199
09-309071	186A
09-309072	107
09-309073	108
09-309074	132
09-309075	103A
09-309076	123A
09-309672	107
09-3002006	229
09A02	746
09A04	74LS193
09A05	4020B
09A07	787
09A08	1239
09A07	787
09L-4	102A
09L-4-12	102A
09L-4-12-7	102A
09N1	123A
010	173BP
010-001	912
010-0101-01	5073A
010-694(Ampex)	154
010-6742	173BP
010-6744	173BP
011-00	191
011-H01	100
012-00	182
012-0121-001	177
012-1	123A
012-1-12	123A
012-1-12-7	123A
012-1020-005	177
012-1022-002	114
012-1023-007	136A
012-1024-001	177
012-1025-002	156
012-103002	152
012E	123A
012-H02	100
0-13-008	254
013-005002-06	754
013-005005	761
013-005005-6	761
013-005007	761
013-005007-6	761
013-005009-6	767
013-1/2(SYL)	159
013-2(SYL)	229
013-3(SYL)	113
013-4(SYL)	108
013-5(SYL)	161
013-6(SYL)	116
013-339	116
013-768	5084A
014-1(SYL)	116
014-2(SYL)	113
014-3(SYL)	116
014-4(SYL)	112
014-6(SYL)	116
014-556	105
014-611	159
014-630	130
014-652	159
014-652C	159
014-680	123A
014-686	123A
014-698	123A
014-754	234
014-772	159
014-784	123A
014-862	199
014A	121
014A-12	121
014A-12-7	121
015	108
015-002	116
015-006	116
015(Lambda)	912
015N	116
016	5636
016-1(SYL)	389
016-2(SYL)	389
016B12	123A
016B810	123A
016B812	123A
017-1(SYL)	5137A
017E824	123A

To Be Replaced	ECG Replacement
018-00001	159
018-00002	159
018-00003	123A
018-00004	187
018-00005	186
018-00006	116
018-00007	116
018-00008	116
018-00009	116
018-1(SYL)	228A
018B	107
019-00009	123A
019-00010	123A
019-001918	109
019-001980	109
019-002691	5066A
019-002718	109
019-002935	116
019-002964	177
019-003315	160
019-003317	103
019-003318	103
019-003319	103
019-003324	100
019-003342	100
019-003343	100
019-003349	128
019-003411	140A
019-003415	158
019-003416	158
019-003420	116
019-003485	175
019-003637	128
019-003675-196	123A
019-003675-203	123A
019-003675-205	199
019-003675-207	123A
019-003675-231	159
019-003675-232	159
019-003675-234	159
019-003675-246	123A
019-003675-257	159
019-003676-334	519
019-003691	195A
019-003692	195A
019-003777	126
019-003778	160
019-003870-013	116
019-003870-020	116
019-003928	5012A
019-003929	108
019-003931	159
019-003932	123A
019-003934	123A
019-003935	224
019-004094	199
019-004111	123A
019-004428-002	123A
019-004558	159
019-005006	123A
019-005010	159
019-005021	123A
019-005043	109
019-005045	5806
019-005157	161
019-005179	159
019-00301980	109
019-301980	109
020-00011	110
020-00012	110
020-00023	126
020-00024	107
020-00025	107
020-00026	108
020-00027	108
020-00028	107
020-00030	109
020-114-007	703A
020-114-008	703A
020-114-009	720
020-1110-004C	159
020-1110-004(Scott)	159
020-1110-005	234
020-1110-005(Scott)	159
020-1110-006(Scott)	160
020-1110-007(Scott)	129
020-1110-008	128
020-1110-008(Scott)	128
020-1110-009(Scott)	129
020-1110-010(Scott)	123A
020-1110-011(Scott)	123A
020-1110-012	199
020-1110-012(Scott)	123A
020-1110-013	199
020-1110-013(Scott)	123A
020-1110-014	129
020-1110-014(Scott)	154
020-1110-015(Scott)	129
020-1110-016	133
020-1110-016(Scott)	133
020-1110-017(Scott)	123A
020-1110-018(Scott)	133
020-1110-021	133
020-1110-022	133
020-1110-025(Scott)	102A
020-1110-027	234
020-1110-038	194
020-1111-002(Scott)	130
020-1111-003(Scott)	130
020-1111-004(Scott)	185
020-1111-005(Scott)	184
020-1111-006(Scott)	179
020-1111-007(Scott)	130
020-1111-008	130
020-1111-008(Scott)	130

To Be Replaced	ECG Replacement
020-1111-009	219
020-1111-009(Scott)	180
020-1111-010(Scott)	182
020-1111-011(Scott)	183
020-1111-017	129
020-1111-018	128
020-1111-019	130
020-1111-038	128
020-1111-080	219
020-1112-001	123A
020-1112-001(Scott)	128
020-1112-002(Scott)	132
020-1112-003	161
020-1112-004	107
020-1112-004(Scott)	123A
020-1112-005	133
020-1112-006	132
020-1112-007	133
020-1112-008	133
020-1112-009	133
020-1114-003	725
020-1114-005	725
020-1114-006	718
020-1114-007	703A
020-1114-007(Scott)	703A
020-1114-008	703A
020-1114-008(Scott)	703A
020-1114-009	720
020-1114-013	725
020-1114-015	941M
021	128
021-0121-00	123A
021-0137-00	128
021-0224-00	129
022	177
022-006500	123
022-0163-00	519
022-1	703A
022-1110-005C	159
022-2823-001	156
022-2823-002	139A
022-2823-003	109
022-2823-004	177
022-2823-005	519
022-2823-006	109
022-2823-007	109
022-2823-008	109
022-2823-010	145A
022-2823-011	116
022-2823-501	611
022-2823-502	109
022-2823-503	614
022-2844-001	1169
022-2844-002	703A
022-2844-701	988
022-2844-703	1169
022-2876-001	132
022-2876-002	103A
022-2876-003	123A
022-2876-004	159
022-2876-005	133
022-2876-006	312
022-2876-007	123A
022-2876-008	222
022-2876-009	312
022-2876-010	295
022-2876-011	235
022-2876-012	236
022-2876-013	222
022-2876-501	129
022-2876-502	133
022-2876-503	312
022-2876-504	312
022-2876-506	236
022-2876-701	300
022-2876-702	103A
022-2876-703	229
022-2876-704	235
022-2976-505	312
022-3504-040	102
022-3504-060	102
022-3505-910	102
022-3511-770	160
022-3511-780	160
022-3511-790	160
022-3516-380	126
022-3640-050	121
022-3640-080	108
022-3640-081	195A
022-3640-082	195A
022-3640-253	158
022-3901-001	109
022-3902-001	109
022-3905-001	116
022-5311-770	126
022-5311-780	126
022-5511-790	126
022A	703A
022D	116
0S22.3504-040	102
0S22.3504-060	102
0S22.3505-910	102
0S22.3511-770	160
0S22.3511-780	160
0S22.3511-790	160
0S22.3516-380	126
0S22.3640-050	121
0S22.3640-080	108
0S22.3640-081	195A
0S22.3640-082	195A
022.3640.081	195A
022.3640.082	195A
0S22.3901-001	109
0S22.3902-001	109
0S22.3905-001	116

To Be Replaced	ECG Replacement
023	175
024	218
025	130
025-1	730
025-10029	125
025-10030	123A
025-10031	102A
025-100003	108
025-100004	108
025-100008	112
025-100009	108
025-100012	161
025-100013	108
025-100014	108
025-100015	128
025-100016	116
025-100017	199
025-100018	123A
025-100026	107
025-100027	109
025-100028	116
025-100029	116
025-100030	123A
025-100031	158
025-100035	116
025-100036	161
025-100037	161
025-100038	161
025-100040	123A
025B	123A
025B1C	730
025B-YEL	123A
026-100003	121
026-100004	121MP
026-100005	102
026-100012	102
026-100013	128
026-100017	123
026-100018	102
026-100019	129
026-100020	121MP
026-100026	123A
026-100028	121
027-000296	116
027-000306	116
027-000312	116
027-300226	113
028	124
028-300-226	110MP
030	156
030-007-0	129
030-034-0	103A
031	156
031-002-0	123A
031-025-0	123AP
031-058-0	300
031-097-0	295
031-098-0	235
031A	123A
032	156
032-1(SYL)	102A
033-001-0	312
033-014-0	222
033-2(SYL)	199
033-3(SYL)	199
033-4(SYL)	199
033-6(SYL)	199
033-31(Sylvania)	123A
033A	199
034-001-0	109
034-018-0	601
034-026-0	116
034-031-0	109
034-032-0	519
034-1(SYL)	121
034A	194
035	156
035-003-0	139A
035-013-0	611
035-026-0	116
037	123A
038	128
039	129
039-033-0	988
041	123A
041A	222
042	123A
042A	710
042(IC)	710
044-1(SYL)	377
044-9667-02	123A
045	221
045-1(Sylvania)	108
045-2(SYL)	108
046-0134	177
046-0909	116
046-07037	5897
046-1(SYL)	186
046-1(Sylvania)	186
046-2(SYL)	186
046-3(SYL)	186
046-4(SYL)	186
046-40209	5894
047	221
047-1(SYL)	187
047-2(SYL)	187
047-3(SYL)	187
047(Diode)	177
048	220
048(Zener)	5075A
049	5081A
050-1(SYL)	103

@, * — See special notes on inside back cover.

To Be Replaced	ECG Replacement
051-0003	177
051-0006	116
051-0010-00	1023
051-0010-01	1023
051-0010-02	1023
051-0010-03	1023
051-0010-04	1023
051-0010-05	1023
051-0011-00	1103
051-0011-00-04	1103
051-0011-00-05	1107
051-0011-01	1103
051-0011-02	1103
051-0011-03	1103
051-0011-04	1103
051-0012-00	720
051-0017-00	722
051-0020	177
051-0020-00	1087
051-0020-02	1087
051-0020-02/03	1087
051-0020-03	1087
051-0021-00	746
051-0022-00	709
051-0024	139A
051-0035-01	1087
051-0035-02	1087
051-0035-03	1087
051-0035-04	1087
051-0036-00	1037
051-0036-01	1037
051-0036-02	1037
051-0036-02/03	1037
051-0036-03	1037
051-0036-0102	1037
051-0038-00	1005
051-0039-00	1142
051-0046	123A
051-0047	123A
051-0049	107
051-0050-00	801
051-0050-01	801
051-0055-02	1155
051-0055-03	1155
051-0055-0203	1155
051-0062	160
051-0063	160
051-0068-02	1003
051-0079	126
051-0086-00	1226
051-0087-00	1254
051-0088-00	1217
051-0088-00/01	1217
051-0100-00	1167
051-0107	159
051-0151	175
051-0155	123A
051-0156	195A
051-0157	195A
051-3999(TABS)	542
051-3999(WIRE)	543
051-3999(WIRES)	543
052	172A
052A	172A
053	722
053-1	722
054	123A
055	123A
056	159
057	123A
057-1(SYL)	116
057-4212	548
057B474H	161
059	124
059-1(SYL)	712
062	123A
065	175
065-001	132
065-002	132
065-004	123A
065-006	199
065-007	186A
065-008	192
065-012	177
065-013	109
065-014	110
065-015	116
065-016	156
065-1	160
065-1-12	160
065-1-12-7	160
065-2	103A
065-2-12	103A
065-210	236
065A	160
065A-12	160
065A-12-7	160
065A(SONY)	1300
065B	126
065B-12	126
065B-12-7	126
065C	121
065C-12	121
065C-12-7	121
065(SONY)	1300
066	128
066-1	102A
066-1-12	102A
066-1-12-7	102A
066-2	102A
066-2-12	102A
066-2-12-7	102A
066-3	102A
066-3-12	102A
066-3-12-7	102A

To Be Replaced	ECG Replacement
069	123A
070	130
070-001	160
070-003	110MP
070-004	125
070-005	125
070-006	125
070-007	125
070-008	125
070-009	125
070-010	125
070-011	140A
070-013	125
070-014	125
070-015	125
070-016	125
070-017	125
070-019	116
070-020	100
070-021	145A
070-022	177
070-024	140A
070-025	5093A
070-027	5809
070-028	125
070-030	125
070-031	156
070-032	125
070-033	125
070-035	156
070-036	5809
070-041	156
070-043	5809
070-047	177
070-048	5075A
070-049	5081A
072	184
072-1(SYL)	552
072-2(SYL)	552
072-7(SYL)	552
072(IC)	710
073-1(SYL)	552
074-1(Philco)	186
074-1(SYL)	291
074-2	291
075-045037	7474
075-046270	7472
075B(SONY)	1301
075(SONY)	1301
076	235
077A	105
077A-12	105
077A-12-7	105
077B	121MP
077B-12	121MP
077B-12-7	121MP
077C	121
077C-12	121
077C-12-7	121
078-0016	116
078-1696	116
078-2400	116
078-5001	116
079	185
080	184
081	184
081-1	790
081(IC)	790
082	712
082-1	712
082A	712
082A(PackardBell)	712
082.115.015	159
083-1(SYL)	159
083-2(SYL)	159
083-3(SYL)	159
083A(Packard Bell)	196
084A	121
084A-12	121
084A-12-7	121
085	130
086	104
086-005132-02	123A
087	104
087-1(SYL)	123A
087-2(SYL)	123A
088-2	125
088B	160
088B-12	160
088B-12-7	160
088C	100
088C-12	100
088C-12-7	100
089-1(SYL)	228
089-2	228
089-2(SYL)	228
089-3	228
089-3(SYL)	228
089-4(SYL)	228
089-214	108
089-215	108
089-216	108
089-220	126
089-222	102A
089-223	123A
089-226	123A
089-231	158
089-233	103
089-236	109
089-241	177
089-248	109
089-252	117

To Be Replaced	ECG Replacement
089-293	109
090A64-1	109
092-1	105
092-1-12	105
094	714
094-007	519
094-010	116
094-011	125
094-012	506
094-013	121
094-014	109
094-1	714
094A	714
094A(Packard Bell)	714
095	715
095-1	715
095A	715
095A(Packard Bell)	715
095A(SONY)	1308
095C(SONY)	1308
095(SONY)	1308
096	790
096-1	790
096A	790
096A(Packard Bell)	790
097	780
097-1	783
097A	780
097A(Packard Bell)	780
098-1	116
098GI219	125
099-1(Philco)	152
099-1(SYL)	152
099-2	196
099-2(SYL)	291
099-24-1456	289
0100	116
0101	177
0101-0034	126
0101-0060A	108
0101-0222	126
0101-0439	193
0101-0448	187
0101-0448A	187
0101-0466	187
0101-0491	123A
0101-0531	108
0101-0540	123A
0101-439	129
0102	116
0102-0371	102A
0103-0014	123A
0103-0014/4460	123A
0103-0014R	128
0103-0014S	128
0103-0051	128
0103-0060	108
0103-0060B	108
0103-0088	123A
0103-0088/4460	199
0103-0088/5462	199
0103-0088H	123A
0103-0088R	123A
0103-0088S	123A
0103-0191	108
0103-0389	108
0103-0419	186
0103-0419A	186
0103-0473	123A
0103-0482	123A
0103-0491	123A
0103-0491/4460	123A
0103-0491/5462	199
0103-0492	199
0103-0503	128
0103-0503/5462	289
0103-0503S	128
0103-0504	123A
0103-0521	108
0103-0521B	108
0103-0531	108
0103-0531/4460	107
0103-0531/5462	123A
0103-0540	123A
0103-0568	107
0103-0568/4460	107
0103-0568/5462	107
0103-0607	128
0103-0616	128
0103-90	116
0103-93	199
0103-94	123A
0103-95	158
0103-389	108
0103-512M	186
0103-9531/4460	108
0104-0013	128
0105-0012	132
0110	116
0110-0011	116
0110-0141	116
0110-0141/4460	116
0110-0141/5462	116
0110-0209	116
0111	116
0112	116
0112-0019	109
0112-0026	109
0112-0028	109
0112-0028/4460	109
0112-0028/5462	109
0112-0037	109
0112-0046	109
0112-0073	109
0112-0082	109

To Be Replaced	ECG Replacement
0114-0017	139A
0114-0026/4460	5014A
0114-0090	139A
0114-0260	5071A
0114-0260-5462	5071A
0117-02	221
0121	123A
0121(Airline)	185
0122-0062	613
0122-0245	610
0122-0246	610
0122-0247	611
0122-0248	611
0122-0249	612
0122-0250	612
0122-0255	613
0122-0256	613
0122(Airline)	184
0123	185
0123(WARDS)	185
0124	184
0124A	159
0124(Hoffman)	184
0124(Knight)	159
0124(WARDS)	184
0125	123A
0126	123A
0126(Wards)	189
0127	123A
0128	123A
0130	128
0131	123A
0131-000100	102A
0131-000101	102A
0131-000102	102A
0131-000192	121
0131-000335	159
0131-000336	121
0131-000337	121
0131-000418	160
0131-000419	160
0131-000473	123A
0131-000498	160
0131-000561	128
0131-000562	121
0131-000563	102A
0131-000704	123A
0131-000802	160
0131-000859	160
0131-000862	160
0131-000863	160
0131-0026	116
0131-0035	116
0131-0044	116
0131-0053	116
0131-001050	158
0131-001056	158
0131-001182	160
0131-001314	160
0131-001328	159
0131-001329	159
0131-001332	160
0131-001417	123A
0131-001418	123A
0131-001419	102A
0131-001420	159
0131-001421	123A
0131-001422	123A
0131-001423	123A
0131-001424	123A
0131-001425	121
0131-001426	102A
0131-001427	129
0131-001428	129
0131-001429	128
0131-001430	128
0131-001433	160
0131-001434	160
0131-001435	160
0131-001436	160
0131-001438	106
0131-001439	159
0131-001464	123A
0131-001597	130
0131-001697	160
0131-001864	123A
0131-002049	153
0131-002068	130
0131-002656	102A
0131-003029	160
0131-004323	123A
0131-004367	130
0131-004746	159
0131-004792	199
0131-005347	199
0131-005348	199
0131-005349	199
0131-005350	199
0131-005351	159
0131-005352	152
0131-005353	153
0131-026	116
0131-053	116
0131-04560	175
0131-4328	159
0132	130
0133	159
0S133.0008T	159
0S133.1003T	159
0134	123A
0135-1	5801
0137	219
0140-5	199
0140-6	123A
0140-7	186

To Be Replaced	ECG Replacement
0140-8	116
0140-9	116
0142	108
0154	5642
0159	116
0200	5944
0201	5944
0205	722
0205(Dynaco)	722
0210	5944
0211	5944
0220	5944
0221	5944
0234	116
0243	5836
0243-001	175
0244	116
0245	5840
0246	5847
0248	156
0277.5A	138A
0300	116
0301	116
0301-3055-00	130
0302	116
0304	116
0307	125
0310	116
0311	116
0312	116
0314	116
0317	125
0320	116
0321	116
0322	116
0324	116
0327	125
0400	116
0401	116
0402	116
0410	116
0411	116
0412	116
0418	121MP
0418(HarmonKardon)	121MP
0450	116
0460	116
0500	177
0557-010	116
0575-005	109
0602	5876
0604	5882
0606	5890
0648R	5071A
0700	116
0701	116
0701(TRANSISTOR)	108
0702	116
0703	108
0704	116
0707	125
0710	116
0727-50	116
0731	128
0770	185
0772	184
0773	185
0776-0160	123A
0776-0195	159
0831	234
0991-002P	129
0991-003N	123A
01045	139A
01057-1	184
01058-5	182
01122-0073	109
01339	116
02057-1	185
02058-5	183
02375-A	175
03008-1	123A
03500	109
03571	109
04049B	116
04053	234
04170	166
04770	109
04970	125
05070	174
05206-00	199
05253	121
05470	138A
06246-00	123A
08047L1	159
08050	116
09004	718
09005	703A
09006	703A
09007	750
09010	746
09011	720
09017	722
09018	788
09500	199
09501	199
09502	199
09502-8	123A
09800	159
09800-12	129
011119	110
011950	519
011956	519
012013-1	123A
012015	128
012085	175

To Be Replaced	ECG Replacement
012099-1	129
013339	117
013339(Rectifier)	125
014002-1	177
014007-1	519
014007-2	519
014024	519
014382	121
014558	154
015040/7	7404
018069	129
018077	128
020156	102A
020425-3	196
020426-3	197
021154	116
022939	157
023606	132
023754	175
023762	130
025026	116
025056	116
025072	125
026237	123A
030010	123A
030010-1	123A
030011	128
030011-1	128
030011-2	128
030254	128
030387	5414
030512-1	123A
030512-2	123A
030515	123A
030515-4	123A
030527	123A
030531-1	105
030536	123A
030537	123A
030537-1	123A
030537-2	123A
030538	123A
030539-1	130
030542	123A
030542-1	123A
030543	123A
030543-1	123A
030543-2	123A
030812-1	103A
031033	109
031034	116
031040	109
031450	5802
033563	161
033571	129
033589	159
036001	703A
037077	175(2)
037085	130
040001	107
041616	177
043001	108
053492	123A
055210	117
055210H	116
055228	125
055228H	125
055269	125(4)
057001	109
057001H	109
057005	109
057005H	109
057040	104
057293	177
059395	109
061366	123A
071818	129
075005	109
080001	126
080003	102A
080004	102A
080006	108
080021	108
080022	108
080023	108
080026	160
080027	160
080028	160
080040	116
080041	108
080042	108
080043	102A
080047	102A
080048	121
080050	116
080052	102A
080059	108
080060	108
080061	160
080071	160
080072	126
080073	102A
080114	160
080206	126
080224	126
080225	126
080228	126
080236	126
080244	160
080245	160
080253	126
080258	160
080266	160
080267	160
080269	160

To Be Replaced	ECG Replacement
080274	126
080275	126
080276	126
080277	126
081001	102A
081018	102A
081019	102A
081026	158
081027	158
081029	158
081038	102A
081042	131MP
081046	102A
081047	102A
081048	102A
081049	102A
081050	102A
081056	102A
081059	158
082006	123A
082019	123A
082020	233
082022	195A
082025	237
082028	289
082029	237
082033	195A
084001	159
084001C	121
085002	109
085003	177
085004	109
085005	110
085006	109
085016	109
085026	110
087003	102A
094013	121
0112945	166
0112945(Elgin)	166
0170301	177
0201201	1003
0207046	1108
0207120	1087
0207205	1155
0301201	1003
0320031	123A
0320051	154
0320064	289
0330302	142A
0404011-001	9937
0404012-001	9949
0440002-003	128
0510006	116
0510079	160
0510079H	160
0517022	109
0517132	177
0517133	177
0517550-3	116
0517750	116
0517750H	116
0517826	109
0517828	109
0517829	109
0518926	177
0525002	109
0525002H	109
0526224	109
0526232	177
0535001	109
0535005	109
0537640	116
0537820	109
0551029	166
0551029H	166
0552005	506
0552006	116
0552006H	116
0552007	506
0552007H	117
0552010	116
0552010H	116
0563012H	102A
0570519	109
0573001	102A
0573001-14	102A
0573001H	102A
0573003	102A
0573003H	102A
0573004	102A
0573005	102A
0573005-14	102A
0573005H	102A
0573011	102A
0573012	102A
0573012H	102A
0573018	102A
0573018H	102A
0573022	102A
0573022H	102A
0573023	102A
0573023A	102A
0573023H	102A
0573024	102A
0573024-14	102A
0573025	102A
0573030	131
0573030-14	131
0573031	131MP
0573034	102A
0573036	102A
0573036H	102A
0573037	103A
0573037H	103A

To Be Replaced	ECG Replacement
0573040	121
0573055	158
0573056	102A
0573066	123A
0573103	102
0573114	102A
0573114H	102A
0573117	102A
0573117-14	102A
0573119	102A
0573125	102A
0573131	102A
0573139	103A
0573142	102A
0573142H	102A
0573152	102A
0573153	102A
0573153H	102A
0573166	104
0573184	158
0573185	176
0573187	102A
0573199	127
0573199H	127
0573200	102A
0573202	123A
0573204	158
0573205	121
0573212	131
0573212H	127
0573328	102A
0573330	126
0573335	160
0573366	160
0573398	126
0573415	124
0573418	123A
0573422	102A
0573422H	102A
0573427	126
0573428	160
0573429	102A
0573430	123A
0573457	2891
0573460	123A
0573468	123A
0573468(Hitachi)	107
0573469	123A
0573469H	123A
0573471	126
0573472	289
0573474	161
0573474H	161
0573475	161
0573479	289
0573479H	123A
0573480	289
0573480H	128
0573481	289
0573481H	123A
0573485	107
0573486	233
0573486H	233
0573487	233
0573487H	233
0573490	123A
0573491	289
0573491H	289
0573492	289
0573494	108
0573495	108
0573501	154
0573506	108
0573506H	108
0573507	107
0573507H	108
0573508	107
0573509	229
0573509H	107
0573510	229
0573510H	107
0573511	108
0573511H	107
0573515	124
0573515H	124
0573517	128
0573518	126
0573519	154
0573523	123A
0573525	175
0573526	163A
0573527	128
0573529	123A
0573532	123A
0573541	237
0573542	129
0573556	123A
0573557	128
0573559	129
0573560	129
0573562	130
0573570	108
0573607	107
0573742	102A
0573981	123A
0575001	109
0575001H	109
0575002	109
0575002H	109
0575004	109
0575005	109
0575005H	109
0575007	109
0575019	110
0575019H	110

To Be Replaced	ECG Replacement
0575047	506
0575047H	506
0575048	174
0575048H	174
0575049	506
0575049H	506
0575050	125
0575051	116
0575054	506
0575066	506
0575067	109
0575099	109
0576001	102A
0576054	116
0577001	109
0620017	109
0820220	233
01030710	123A
01031687	123A
04040501-1	909D
04040503-1	910
04040505	941D
04040505-001	941D
04040751-001	923D
04410025-001	519
04410025-005	519
04410042-001	519
04440028-001	123A
04440028-003	123A
04440028-006	123A
04440028-008	123A
04440028-013	123A
04440032-002	159
04440032-003	159
04440032-004	159
04440032-005	159
04440032-006	159
04440032-007	159
04440032-008	159
04440032-009	159
04440052-001	123A
04440052-002	123A
04450002-001	123A
04450002-004	123A
04450002-005	123A
04450016-001	159
04450016-002	159
04450016-003	129
04450023-001	130
04450023-005	181
04450023-006	130
04450037-001	181
04450037-002	182
05320064	289
05320074H	123A
06100008	292
06120030	152
06120031	286
06120053	157
06200013	177
06200017	109
06200065	5801
06200076	503
09301020	102A
09308004	703A
09308038	1142
09391000A	925
072025005	912
0A01-08R	5072A
0A01-11SE	5074A
0A7	109
0A8-1	160
0A8-1-12	160
0A8-1-12-7	160
0A9	109
0A9M	109
0A26	601
0A70	109
0A73	109
0A81	109
0A90	109
0A90G	109
0A90GA	109
0A90LF	109
0A90M	109
0A90MLF	109
0A90Z	109
0A91	109
0A95	110
0A-95	110
0A99	109
0A111SE	5074A
0A180	109
0A12612	142A
0AZ200	5069A
0AZ203	137A
0AZ204	5071A
0AZ205	138A
0AZ206	5072A
0AZ207	139A
0AZ210	137A
0AZ213	142A
0AZ222	5178A
0AZ223	5180A
0AZ224	5181A
0AZ225	5182A
0AZ226	5183A
0AZ227	5185A
0AZ228	5186A
0AZ229	5187A
0AZ230	5188A
0AZ231	5189A
0AZ232	5191A
0AZ233	5192A
0AZ234	5194A

To Be Replaced	ECG Replacement
0AZ235	5196A
0AZ236	5197A
0AZ237	5198A
0AZ292	5185A
0C238	123A
0F164	116
0N020540	128
0N047204-2	123A
0N049874	9912
0N47204-1	123A
0N120623	519
0N143285	519
0N187840	941
0N206068	519
0P130	3028
0P131	3028
0P12151	3040
0P12252	3040
0PL-209A-A	3008
0PL-270	3008
0PL-270-50	3008
0S-90	109
0S492	176
0S536G	123A
0SD-0033	138A
0Z12T5	142A
0Z12T10	142A
¼.7AZ5	5069A
¼82Z5	150A
¼A9.1	139A
¼A9.1A	139A
¼A9.1B	139A
¼A10	140A
¼A10A	140A
¼A10B	140A
¼A12	142A
¼A12A	142A
¼A12B	142A
¼A14	144A
¼A14A	144A
¼A14B	144A
¼A15	145A
¼A15A	145A
¼A15B	145A
¼A27	146A
¼A27A	146A
¼A27B	146A
¼A33	147A
¼A33A	147A
¼A33B	147A
¼A62	149A
¼A62A	149A
¼A62B	149A
¼A82	150A
¼A82A	150A
¼A82B	150A
¼A110	151A
¼A110A	151A
¼A110B	151A
¼AZ3.6D10	134A
¼AZc3.605	134A
¼AZ5.1D	135A
¼AZ5.1D5	135A
¼AZ5.6D5	136A
¼AZ6.2D5	137A
¼LZ5.6D	136A
¼LZ5.6D5	136A
¼LZ5.6D10	136A
¼LZ6.2D	137A
¼LZ6.2D5	137A
¼M2.4AZ	5000A
¼M2.4AZ5	5000A
¼M2.4AZ10	5000A
¼M2.7AZ	5002A
¼M2.7AZ5	5002A
¼M2.7AZ10	5002A
¼M3.0AZ	5004A
¼M3.0AZ5	5004A
¼M3.0AZ10	5004A
¼M3.3AZ	5005A
¼M3.3AZ5	5066A
¼M3.3AZ10	5005A
¼M3.6AZ5	134A
¼M3.6AZ10	134A
¼M3.9AZ	5007A
¼M3.9AZ5	5067A
¼M3.9AZ10	5007A
¼M4.3AZ	5008A
¼M4.3AZ5	5068A
¼M4.3AZ10	5008A
¼M4.7AZ	5009A
¼M4.7AZ5	5009A
¼M4.7AZ10	5009A
¼M5.1AZ	5010A
¼M5.1AZ5	135A
¼M5.1AZ10	5010A
¼M5.6AZ	136A
¼M5.6AZ5	136A
¼M5.6AZ10	136A
¼M6.2AZ5	137A
¼M6.8AZ	5014A
¼M6.8AZ5	5071A
¼M6.8AZ10	5014A
¼M6.8Z	5014A
¼M6.8Z5	5071A
¼M6.8Z10	5014A
¼M7.5AZ5	138A
¼M7.5Z	5015A
¼M7.5Z5	138A
¼M7.5Z10	5015A
¼M8/2Z	5016A
¼M8.2Z5	5072A
¼M9.1Z	5018A

To Be Replaced	ECG Replacement
¼M9.1Z5	139A
¼M9.1Z10	5018A
¼M10Z5	140A
¼M11Z5	5074A
¼M12Z5	142A
¼M13Z5	143A
¼M14Z5	144A
¼M17Z5	5076A
¼M18Z5	5077A
¼M19Z5	5078A
¼M20Z5	5079A
¼M20Z10	5029A
¼M22Z	5030A
¼M22Z5	5080A
¼M25Z5	5032A
¼M25Z10	5032A
¼M27Z5	145A
¼M30Z5	5085A
¼M33Z5	147A
¼M39Z5	5086A
¼M43Z5	5087A
¼M47Z5	5088A
¼M56Z5	5090A
¼M62Z	149A
¼M62Z5	149A
¼M62Z100	149A
¼M68Z5	5092A
¼M75Z5	5093A
¼M91Z5	5095A
¼M100Z5	5096A
¼M110Z5	151A
¼M120Z10	5052A
¼M140Z5	5099A
¼M150Z	5055A
¼M150Z5	5100A
¼M150Z10	5055A
¼M160Z	5056A
¼M160Z5	5056A
¼M160Z10	5056A
¼M175Z	5057A
¼M175Z5	5057A
¼M175Z10	5057A
¼M180Z	5058A
¼M180Z5	5058A
¼M180Z10	5058A
¼M200Z	5060A
¼M200Z5	5060A
¼M200Z10	5060A
¼M2475	5081A
¼M3025	5084A
¼Z5.1T5	5010A
¼Z5.6T5	5011A
¼Z6.2T5	5013A
¼Z12T5	142A
¼Z14D	144A
¼Z14D5	144A
¼Z14D10	144A
¼Z15D5	145A
¼Z15D10	145A
¼Z15T5	5024A
¼Z27D	146A
¼Z27D5	146A
¼Z27D10	146A
¼Z27T5	5033A
¼Z33D	147A
¼Z33D5	147A
¼Z33D10	147A
¼Z33T5	5036A
¼Z62D	149A
¼Z62D5	149A
¼Z62D10	149A
¼Z62T5	5044A
¼Z82D	150A
¼Z82D10	150A
¼Z82T5	5047A
¼Z110D	151A
¼Z110D5	151A
¼Z110D10	151A
½Z2TT5	146A
½Z3.3T5	5005A
½Z3.6T5	5006A
½Z3.9T5	5007A
½Z4.3T5	5008A
½Z4.7T5	5009A
½Z5.1T5	5010A
½Z5.6T5	5011A
½Z6.2T5	5013A
½Z6.8T5	5014A
½Z7.5T5	5015A
½Z8.2T5	5016A
½Z9.1T5	5018A
½Z10T5	5019A
½Z11T5	5020A
½Z13T5	5022A
½Z15T5	5024A
½Z16T5	5025A
½Z18T5	5027A
½Z20T5	5029A
½Z22T5	5030A
½Z24T5	5031A
½Z27T5	5033A
½Z30T5	5035A
½Z33T5	140A
½Z36T5	5037A
½Z39T5	5038A
½Z43T5	5039A
½Z47T5	5040A
½Z51T5	5041A
½Z56T5	5042A
½Z62T5	5044A
½Z68T5	5045A
½Z75T5	5046A
½Z82T5	5047A
½Z91T5	5049A

To Be Replaced	ECG Replacement
½Z100T5	5050A
½Z105T5	140A
¾Z12D5	142A
¾Z12D10	142A
.25N6.8	5014A
.25N7.5	5015A
.25N8.2	5016A
.25N9.1	5018A
.25N10	5019A
.25N11	5020A
.25N12	5021A
.25N13	5022A
.25N14	5023A
.25N15	145A
.25N16	5025A
.25N17	5026A
.25N18	5027A
.25N19	5028A
.25N20	5029A
.25N22	5030A
.25N24	5031A
.25N25	5032A
.25N27	5033A
.25N30	5035A
.25N33	5036A
.25N36	5037A
.25N39	5038A
.25N43	5039A
.25N45	5040A
.25N47	5040A
.25N50	5041A
.25N52	5041A
.25N56	5042A
.25N62	5044A
.25N68	5045A
.25N75	5046A
.25N82	5047A
.25N91	5049A
.25N100	5050A
.25N110	5051A
.25N120	5052A
.25N130	5053A
.25N140	5054A
.25N150	5055A
.25N200	5060A
.25NN15	5024A
.25T5.6	136A
.25T5.6A	136A
.25T5.6B	136A
.25T5.8	5070A
.25T5.8A	5070A
.25T6.2	137A
.25T6.2A	137A
.25T6.2B	137A
.25T6.8	5071A
.25T6.8A	5071A
.25T7.1	5071A
.25T7.1A	5071A
.25T7.5	138A
.25T7.5A	138A
.25T7.5B	138A
.25T8.2	5072A
.25T8.2A	5072A
.25T8.7	5073A
.25T8.7A	5073A
.25T8.8	5073A
.25T8.8A	5073A
.25T9.1	139A
.25T9.1A	139A
.25T9.1B	139A
.25T10	140A
.25T10A	140A
.25T10B	140A
.25T10.5	140A
.25T10.5A	140A
.25T11	5074A
.25T11A	5074A
.25T11.5	141A
.25T11.5B	141A
.25T12	142A
.25T12A	142A
.25T12B	142A
.25T12.8	143A
.25T12.8A	143A
.25T12.8B	143A
.25T13	143A
.25T13A	143A
.25T14	144A
.25T14A	144A
.25T14B	144A
.25T15	145A
.25T15A	145A
.25T15B	145A
.25T15.8	5075A
.25T15.8A	5075A
.25T16	5075A
.25T16A	5075A
.25T17	5076A
.25T17A	5076A
.25T18	5077A
.25T18A	5077A
.25T19	5078A
.25T19A	5078A
.25T20	5079A
.25T20A	5079A
.25T22	5080A
.25T22A	5080A
.25T23.5	5081A
.25T23.5A	5081A
.25T24	5081A
.25T24A	5081A
.25T25	5082A
.25T25A	5082A
.25T27	146A
.25T27A	146A

To Be Replaced	ECG Replacement
.25T27B	146A
.25T28	5083A
.25T28A	5083A
.25T30	5084A
.25T30A	5084A
.25T33	147A
.25T33A	147A
.25T33B	147A
.25T36	5085A
.25T36A	5085A
.25T39	5086A
.25T39A	5086A
.25T43	5087A
.25T43A	5087A
.25T47	5088A
.25T47A	5088A
.25T51	5089A
.25T51A	5089A
.25T55	148A
.25T55B	148A
.25T56	5090A
.25T56A	5090A
.25T60	5091A
.25T60A	5091A
.25T62	149A
.25T62A	149A
.25T62B	149A
.25T68	5092A
.25T68A	5092A
.25T75	5093A
.25T75A	5093A
.25T82	150A
.25T82A	150A
.25T82B	150A
.25T87	5094A
.25T87A	5094A
.25T91	5095A
.25T91A	5095A
.25T100	5096A
.25T100A	5096A
.25T110	151A
.25T110A	5151A
.25T110B	151A
.25T120	5097A
.25T120A	5097A
.25T130	5098A
.25T130A	5098A
.25T140	5099A
.25T150	5100A
.25T150A	5100A
.25T160	5101A
.25T160A	5101A
.25T175	5102A
.25T180	5103A
.25T180A	5103A
.25T200	5105A
.25T200A	5105A
.4M3.3AZ5	5066A
.4M3.6AZ5	134A
.4M3.9AZ5	5067A
.4M4.3Z5	5068A
.4M4.7AZ5	5069A
.4M6.2AZ5	137A
.4M6.8AZ5	5071A
.4M6.8Z5	5071A
.4M7.5AZ5	138A
.4M7.5Z5	138A
.4M8.2AZ5	5072A
.4M8.2Z5	5072A
.4M9.1AZ5	139A
.4M9.1Z5	139A
.4M10AZ5	140A
.4M10Z5	140A
.4M11Z5	5074A
.4M12AZ5	142A
.4M12Z5	142A
.4M13Z5	143A
.4M15Z5	145A
.4M16Z5	5075A
.4M18Z5	5077A
.4M20Z5	5079A
.4M22Z5	5080A
.4M24Z5	5081A
.4M30Z5	5084A
.4M33Z5	147A
.4M36Z5	5085A
.4M43Z5	5087A
.4M47Z5	5088A
.4M51Z5	5089A
.4M56Z5	5090A
.4M62Z5	149A
.4M68Z5	5092A
.4M75Z5	5093A
.4M82Z5	150A
.4M91Z5	5095A
.4M100Z5	5096A
.4M110Z5	151A
.4M120Z5	5097A
.4M130Z5	5098A
.4M150Z5	5100A
.4M160Z5	5101A
.4M180Z5	5103A
.4M200Z5	5105A
.4M275	146A
.4MZ39Z5	5086A
.4T5.6	136A
.4T5.6A	136A
.4T5.6B	136A
.4T6.2	137A
.4T6.2A	137A
.4T6.2B	137A
.4T6.8	5071A
.4T6.8A	137A
.4T6.8B	5071A
.4T7.5	138A

To Be Replaced	ECG Replacement
.4T7.5A	138A
.4T7.5B	138A
.4T8.2	5072A
.4T8.2A	5072A
.4T8.2B	5072A
.4T9.1	139A
.4T9.1A	139A
.4T9.1B	139A
.4T10	140A
.4T10A	140A
.4T10B	140A
.4T11	5074A
.4T11A	5074A
.4T11B	5074A
.4T11.5	141A
.4T11.5A	141A
.4T12A	142A
.4T12B	142A
.4T12.8	143A
.4T12.8A	143A
.4T13	143A
.4T13A	143A
.4T13B	143A
.4T14	144A
.4T14A	144A
.4T15	145A
.4T15B	145A
.4T16	5075A
.4T16A	5075A
.4T16B	5075A
.4T18	5077A
.4T18A	5077A
.4T18B	5077A
.4T20	5079A
.4T20A	5079A
.4T20B	5079A
.4T22	5080A
.4T22A	5080A
.4T22B	5080A
.4T24	5081A
.4T24A	5081A
.4T24B	5081A
.4T27	146A
.4T27A	146A
.4T27B	146A
.4T30A	5084A
.4T30B	5084A
.4T33	147A
.4T33A	147A
.4T33B	147A
.4T36	5085A
.4T36A	5085A
.4T36B	5085A
.4T39	5086A
.4T39A	5086A
.4T39B	5086A
.4T43	5087A
.4T43A	5087A
.4T43B	5087A
.4T47	5088A
.4T47A	5088A
.4T47B	5088A
.4T51	5089A
.4T51A	5089A
.4T51B	5089A
.4T55	148A
.4T55A	148A
.4T56	5090A
.4T56A	5090A
.4T56B	5090A
.4T62	149A
.4T62A	149A
.4T62B	149A
.4T68	5092A
.4T68A	5092A
.4T68B	5092A
.4T75	5093A
.4T75A	5093A
.4T75B	5093A
.4T82	150A
.4T82A	150A
.4T82B	150A
.4T91	5095A
.4T91A	5095A
.4T91B	5095A
.4T100	5096A
.4T100A	5096A
.4T100B	5096A
.4T110	151A
.4T110A	151A
.4T110B	5096A
.4T120	5097A
.4T120A	5097A
.4T120B	5097A
.4T130	5098A
.4T130A	5098A
.4T130B	5098A
.4T150	5100A
.4T150A	5100A
.4T150B	5100A
.4T160	5101A
.4T160A	5101A
.4T160B	5101A
.4T180	5103A
.4T180A	5103A
.4T180B	5103A
.4T200	5105A
.4T200A	5105A
.4T200B	5105A
.5E05	116
.5E1	116
.5E2	116
.5E3	116
.5E4	116
.5E5	116

To Be Replaced	ECG Replacement
.5E6	116
.5E7	125
.5E8	125
.5E10	125
.5E12	506
.5J05	116
.5J1	116
.5J2	116
.5J3	116
.5J4	116
.5J5	116
.5J6	116
.5J7	125
.5J8	125
.5J10	125
.5J12	506
.5M3.3ZS5	5066A
.5M3.6ZS5	134A
.5M3.9Z5	5067A
.5M4.3ZS5	5068A
.5M4.7ZS5	5069A
.5M5.6ZS5	136A
.5M6.0ZS5	5070A
.5M6.2ZS5	137A
.5M6.8ZS5	5071A
.5M7.5ZS5	138A
.5M8.2ZS5	5072A
.5M8.7ZS5	5073A
.5M9.1ZS5	139A
.5M10ZS5	140A
.5M11ZS5	5074A
.5M12ZS5	142A
.5M13ZS5	143A
.5M14ZS5	144A
.5M15ZS5	145A
.5M16ZS5	5075A
.5M17ZS5	5076A
.5M18ZS5	5077A
.5M19ZS5	5078A
.5M20Z5	5079A
.5M22ZS5	5080A
.5M24ZS5	5081A
.5M25ZS5	5082A
.5M27ZS5	146A
.5M28ZS5	5083A
.5M30ZS5	5084A
.5M33ZS5	147A
.5M36ZS5	5085A
.5M39ZS5	5086A
.5M43Z5	5087A
.5M47ZS5	5088A
.5M51ZS5	5089A
.5M56ZS5	5090A
.5M60ZS5	5091A
.5M62ZS5	149A
.5M68ZS5	5092A
.5M75ZS5	5093A
.5M82ZS5	150A
.5M87ZS5	5094A
.5M91ZS5	5095A
.5M100ZS5	5096A
.5M110ZS5	151A
.5M120ZS5	5097A
.5M130ZS5	5098A
.5M140ZS5	5099A
.5M150ZS5	5100A
.5M160ZS5	5101A
.5M170ZS5	5102A
.5M180ZS5	5103A
.5M190ZS5	5104A
.5M200ZS5	5105A
.75N5	145A
.75N5.1	135A
.75N5.6	136A
.75N6.2	137A
.75N7.5	138A
.75N12	142A
.75N27	146A
.75N33	147A
.75N62	149A
.75N82	150A
.75N110	151A
.7E05	116
.7E1	116
.7E2	116
.7E3	116
.7E4	116
.7E5	116
.7E6	116
.7E7	125
.7E8	125
.7E10	125
.7E12	506
.7J05	116
.7J1	116
.7J2	116
.7J3	116
.7J5	116
.7J6	116
.7J7	125
.7J8	125
.7J10	125
.7J12	506
.7JZ6.8	5071A
.7JZ7.5	138A
.7JZ8.2	5072A
.7JZ9.1	139A
.7JZ10	140A
.7JZ11	5074A
.7JZ12	142A
.7JZ13	143A
.7JZ14	144A
.7JZ15	145A
.7JZ16	5075A
.7JZ17	5076A

To Be Replaced	ECG Replacement
.7JZ18	5077A
.7JZ19	5078A
.7JZ20	5079A
.7JZ22	5080A
.7JZ24	5081A
.7JZ25	5082A
.7JZ27	146A
.7JZ30	5084A
.7JZ33	147A
.7JZ36	5085A
.7JZ39	5086A
.7JZ43	5087A
.7JZ45	5088A
.7JZ47	5088A
.7JZ50	5089A
.7JZ51	5089A
.7JZ56	148A
.7JZ62	149A
.7JZ68	5092A
.7JZ75	5093A
.7JZ82	150A
.7JZ91	5095A
.7JZ100	5096A
.7JZ100B	5096A
.7JZ110	5151A
.7JZ120	5097A
.7JZ130	5098A
.7JZ140	5099A
.7JZ150	5100A
.7JZ160	5101A
.7JZ180	5103A
.7JZ200	5104A
.7JZ220	151A
.7JZM100B	5096A
.7RM220D	151A
.7Z6.8A	5071A
.7Z6.8B	5071A
.7Z6.8C	5071A
.7Z6.8D	5071A
.7Z7.5A	138A
.7Z7.5B	138A
.7Z7.5C	138A
.7Z7.5D	138A
.7Z8.2A	5072A
.7Z8.2B	5072A
.7Z8.2C	5072A
.7Z8.2D	5072A
.7Z9.1A	139A
.7Z9.1B	139A
.7Z9.1C	139A
.7Z9.1D	139A
.7Z10A	140A
.7Z10B	140A
.7Z10C	140A
.7Z10D	140A
.7Z11A	5074A
.7Z11B	5074A
.7Z11C	5074A
.7Z11D	5074A
.7Z12A	142A
.7Z12B	142A
.7Z12C	142A
.7Z12D	142A
.7Z13A	143A
.7Z13B	143A
.7Z13C	143A
.7Z13D	143A
.7Z14A	145A
.7Z14B	144A
.7Z14C	145A
.7Z15B	145A
.7Z15D	145A
.7Z16A	5075A
.7Z16B	5075A
.7Z16C	5075A
.7Z16D	5075A
.7Z17A	5076A
.7Z17B	5076A
.7Z17C	5076A
.7Z17D	5076A
.7Z18A	5077A
.7Z18B	5077A
.7Z18C	5077A
.7Z18D	5077A
.7Z19A	5078A
.7Z19B	5078A
.7Z19C	5078A
.7Z19D	5078A
.7Z20A	5079A
.7Z20B	5079A
.7Z20C	5079A
.7Z20D	5079A
.7Z22A	5080A
.7Z22B	5080A
.7Z22C	5080A
.7Z22D	5080A
.7Z24A	5081A
.7Z24B	5081A
.7Z24C	5081A
.7Z24D	5081A
.7Z25A	5082A
.7Z25B	5082A
.7Z25C	5082A
.7Z25D	5082A
.7Z27A	146A
.7Z27B	146A
.7Z27C	146A
.7Z27D	146A
.7Z30A	5084A
.7Z30B	5084A
.7Z30C	5084A
.7Z30D	5084A
.7Z33A	147A
.7Z33B	147A
.7Z33C	147A

To Be Replaced	ECG Replacement
.7Z33D	147A
.7Z36A	5085A
.7Z36B	5085A
.7Z36C	5085A
.7Z36D	5085A
.7Z39A	5086A
.7Z39B	5086A
.7Z39C	5086A
.7Z39D	5086A
.7Z43A	5087A
.7Z43B	5087A
.7Z43C	5087A
.7Z43D	5087A
.7Z45A	5088A
.7Z45B	5088A
.7Z45C	5088A
.7Z45D	5088A
.7Z47A	5088A
.7Z47B	5088A
.7Z47C	5088A
.7Z47D	5088A
.7Z50A	5089A
.7Z50B	5089A
.7Z50C	5089A
.7Z50D	5089A
.7Z51A	5089A
.7Z51B	5089A
.7Z51C	5089A
.7Z51D	5089A
.7Z52A	5089A
.7Z52B	5089A
.7Z52C	5089A
.7Z52D	5089A
.7Z56A	148A
.7Z56B	5090A
.7Z56C	148A
.7Z56D	148A
.7Z62A	149A
.7Z62B	149A
.7Z62C	149A
.7Z62D	149A
.7Z68A	5092A
.7Z68B	5092A
.7Z68C	5092A
.7Z68D	5092A
.7Z75A	5093A
.7Z75B	5093A
.7Z75C	5093A
.7Z75D	5093A
.7Z82A	150A
.7Z82B	150A
.7Z82C	150A
.7Z82D	150A
.7Z91A	5095A
.7Z91B	5095A
.7Z91C	5095A
.7Z91D	5095A
.7Z100A	5096A
.7Z100B	5096A
.7Z100C	5096A
.7Z100D	5096A
.7Z110A	151A
.7Z110B	151A
.7Z110C	151A
.7Z120A	5097A
.7Z120B	5097A
.7Z120C	5097A
.7Z120D	5097A
.7Z130A	5098A
.7Z130B	5098A
.7Z130C	5098A
.7Z130D	5098A
.7Z140A	5099A
.7Z140B	5099A
.7Z140C	5099A
.7Z140D	5099A
.7Z150A	5100A
.7Z150B	5100A
.7Z150C	5100A
.7Z150D	5100A
.7Z160A	5101A
.7Z160B	5101A
.7Z160C	5101A
.7Z160D	5101A
.7Z180A	5103A
.7Z180B	5103A
.7Z180C	5103A
.7Z180D	5103A
.7Z200A	5105A
.7Z200B	5105A
.7Z200C	5105A
.7Z200D	5105A
.7Z220A	151A
.7Z220B	151A
.7Z220C	151A
.7Z220D	151A
.7M1	5074A
.7ZM6.8A	5071A
.7ZM6.8B	5071A
.7ZM6.8C	5071A
.7ZM6.8D	5071A
.7ZM7.5A	138A
.7ZM7.5B	138A
.7ZM7.5C	138A
.7ZM7.5D	138A
.7ZM8.2A	5072A
.7ZM8.2B	5072A
.7ZM8.2C	5072A
.7ZM8.2D	5072A
.7ZM9.1A	139A
.7ZM9.1B	139A
.7ZM9.1C	139A
.7ZM9.1D	139A
.7ZM10A	140A

To Be Replaced	ECG Replacement
.7ZM10B	140A
.7ZM10C	140A
.7ZM10D	140A
.7ZM11A	5074A
.7ZM11B	5074A
.7ZM11C	5074A
.7ZM12A	142A
.7ZM12B	142A
.7ZM12C	142A
.7ZM12D	142A
.7ZM13A	143A
.7ZM13B	143A
.7ZM13C	143A
.7ZM13D	143A
.7ZM14A	144A
.7ZM14B	144A
.7ZM14C	144A
.7ZM14D	144A
.7ZM15A	145A
.7ZM15B	145A
.7ZM15C	145A
.7ZM15D	145A
.7ZM16A	5075A
.7ZM16B	5075A
.7ZM16C	5075A
.7ZM16D	5075A
.7ZM17A	5076A
.7ZM17B	5076A
.7ZM17C	5076A
.7ZM17D	5076A
.7ZM18A	5077A
.7ZM18B	5077A
.7ZM18C	5077A
.7ZM18D	5077A
.7ZM19A	5078A
.7ZM19B	5078A
.7ZM19C	5078A
.7ZM19D	5078A
.7ZM20A	5079A
.7ZM20B	5079A
.7ZM20C	5079A
.7ZM20D	5079A
.7ZM22A	5080A
.7ZM22B	5080A
.7ZM22C	5080A
.7ZM22D	5080A
.7ZM24A	5081A
.7ZM24B	5081A
.7ZM24C	5081A
.7ZM24D	5081A
.7ZM25A	5082A
.7ZM25B	5082A
.7ZM25C	5082A
.7ZM25D	5082A
.7ZM27A	146A
.7ZM27B	146A
.7ZM27C	146A
.7ZM27D	146A
.7ZM30A	5084A
.7ZM30B	5084A
.7ZM30C	5084A
.7ZM30D	5084A
.7ZM33A	147A
.7ZM33B	147A
.7ZM33C	147A
.7ZM33D	147A
.7ZM36A	5085A
.7ZM36B	5085A
.7ZM36C	5085A
.7ZM36D	5085A
.7ZM39A	5086A
.7ZM39B	5086A
.7ZM39C	5086A
.7ZM39D	5086A
.7ZM43A	5087A
.7ZM43B	5087A
.7ZM43C	5087A
.7ZM43D	5087A
.7ZM47A	5088A
.7ZM47B	5088A
.7ZM47C	5088A
.7ZM47D	5088A
.7ZM50A	5089A
.7ZM50B	5089A
.7ZM50C	5089A
.7ZM50D	5089A
.7ZM51A	5089A
.7ZM51B	5089A
.7ZM51C	5089A
.7ZM51D	5089A
.7ZM52A	5089A
.7ZM52B	5089A
.7ZM52C	5089A
.7ZM52D	5089A
.7ZM56A	5090A
.7ZM56B	5090A
.7ZM56C	5090A
.7ZM56D	5090A
.7ZM62A	149A
.7ZM62B	149A
.7ZM62C	149A
.7ZM62D	149A
.7ZM68A	5092A
.7ZM68B	5092A
.7ZM68C	5092A
.7ZM68D	5092A
.7ZM75A	5093A
.7ZM75B	5093A
.7ZM75C	5093A
.7ZM75D	5093A
.7ZM82A	150A
.7ZM82B	150A
.7ZM82C	150A
.7ZM82D	150A
.7ZM91A	5095A

To Be Replaced	ECG Replacement
.7ZM91B	5095A
.7ZM91C	5095A
.7ZM91D	5095A
.7ZM100A	5096A
.7ZM100B	5096A
.7ZM100C	5096A
.7ZM100D	5096A
.7ZM110A	151A
.7ZM110B	151A
.7ZM110C	151A
.7ZM110D	151A
.7ZM120A	5097A
.7ZM120B	5097A
.7ZM120C	5097A
.7ZM120D	5097A
.7ZM130A	5098A
.7ZM130B	5098A
.7ZM130C	5098A
.7ZM130D	5098A
.7ZM140A	5099A
.7ZM140B	5099A
.7ZM140C	5099A
.7ZM140D	5099A
.7ZM150A	5100A
.7ZM150B	5100A
.7ZM150C	5100A
.7ZM150D	5100A
.7ZM160A	5101A
.7ZM160B	5101A
.7ZM160C	5101A
.7ZM160D	5101A
.7ZM180A	5103A
.7ZM180B	5103A
.7ZM180C	5103A
.7ZM180D	5103A
.7ZM200A	5105A
.7ZM200B	5105A
.7ZM200C	5105A
.7ZM200D	5105A
.7ZM220A	151A
.7ZM220B	151A
.7ZM220C	151A
1-000-099-00	7490
1-0002-0001	519
1-0006-0021	123A
1-0006-0022	123A
1-0006-0023	159
1,000.111-00	159
1-001-003-15	123A
1-001/2207	177
1-002	130
1-003	130
1-014/2207	177
1-016	109,110
1-017	109
1-021-0427	500A
1-021-0454	523
1-034/2207	159
1-035/2207	128
1-037/2207	109
1-041/2207	108
1-042/2207	123A
1-043/2207	159
1-044/2207	123A
1-021151	124
1-021162	124
1-021221	128
1-021270	130
1-021280	181
1-021290	128
1/4M4.7AZ5	5069A
1/4M6.8Z5	5071A
1/4M16Z5	5075A
1/4M24Z5	5081A
1/4M36Z5	5085A
1/4M120Z5	5097A
1/4M130Z5	5098A
1/4M200Z5	5105A
1-20-001-890	116
1-21-73	100
1-21-74	100
1-21-75	100
1-21-76	100
1-21-78	100
1-21-83	100
1-21-91	100
1-21-92	100
1-21-93	100
1-21-95	102A
1-21-96	102A
1-21-100	100
1-21-102	100
1-21-103	100
1-21-104	100
1-21-105	100
1-21-106	102A
1-21-107	102A
1-21-120	102A
1-21-128	100
1-21-135	160
1-21-137	160
1-21-138	126
1-21-139	160
1-21-148	102A
1-21-150	160
1-21-157	160
1-21-161	100
1-21-162	100
1-21-164	102A
1-21-179	100
1-21-180	100
1-21-184	102A
1-21-186	100
1-21-189	126
1-21-190	160

To Be Replaced	ECG Replacement
1-21-191	102A
1-21-192	102A
1-21-225	102A
1-21-226	102A
1-21-227	102A
1-21-228	160
1-21-229	160
1-21-230	160
1-21-231	160
1-21-232	102A
1-21-233	160
1-21-234	100
1-21-235	100
1-21-236	100
1-21-240	100
1-21-241	100
1-21-242	126
1-21-243	126
1-21-244	126
1-21-246	102A
1-21-254	100
1-21-256	160
1-21-257	126
1-21-258	160
1-21-259	160
1-21-260	160
1-21-266	102A
1-21-267	102A
1-21-270	121
1-21-271	121
1-21-272	102A
1-21-273	100
1-21-274	102A
1-21-275	100
1-21-276	123A
1-21-277	123A
1-21-278	123A
1-21-279	123A
1-21-289	100
1-57-83	532
1-101	116
1-210	136A
1-425-636	109
1-506-319	156
1-530-012-11	116
1-531-024	167
1-531-027	116
1-531-028	503
1-531-028-21	503
1-531-052(SONY)	502
1-531-055(SONY)	502
1-531-063-00	503
1-531-064-00	502
1-531-5-11	116
1-531-105	116
1-531-106-13	116
1-531-106-17	116
1-531-10513	116
1-534-105-13	116
1-590-1261	7440
1 735 0060	159
1 735 0061	159
1 735 0066	159
1 735 0068	129
1-801-003	123A
1-801-003-12	108
1-801-003-13	108
1-801-003-14	108
1-801-003-15	108
1-801-004	123A
1-801-004-17	123A
1-801-005	158
1-801-005-23	102A
1-801-006	158
1-801-006-12	102A
1-801-006-14	102A
1-801-009-11	5651
1-801-301-13	124
1-801-301-14	124
1-801-301-15	124
1-801-304-15	107
1-801-305-13	108
1-801-306	108
1-801-306-13	108
1-801-306-14	108
1-801-306-15	108
1-801-308	102A
1-801-308-24	102A
1-801-309	103A
1-801-310	158
1-801-314	123A
1-801-314-15	123A
1-801-314-16	123A
1-2114-0	128
1-8259	116
1-12689	109
1-13989	519
1-16549	177
1-20363	139A
1-20398	140A
1-22489	139A
1-22518	116
1-22519	135A
1-52221011	102A
1-522210111	102A
1-522210131	160
1-522210300	160
1-522210921	160
1-522211021	160
1-522211200	102A
1-522211328	102A
1-522211921	160
1-522214400	160
1-522214411	160
1-522214435	160

To Be Replaced	ECG Replacement
1-522214821	160
1-522214831	160
1-522216500	102A
1-522216600	160
1-522217400	160
1-522223720	123A
1-6147191229	123A
1-6171191368	123A
1-6207190405	102A
1-6501190016	116
1A0013	199
1A0013(Yamaha)	175
1A0020	123A
1A0021	123A
1A0022	123A
1A0024	123A
1A0025	123A
1A0027	175
1A0027(Yamaha)	175
1A0029	123A
1A0032	123A
1A0033	123A
1A0034	123A
1A0035	123A
1A0037	123A
1A0038	124
1A0043	123A
1A0044	123A
1A0046	152
1A0048	175
1A0048(Yamaha)	175
1A0051	123A
1A0055	102A
1A0056	102A
1A0058	152
1A0059	152
1A0063	123A
1A0066	128
1A0067	123A
1A0070	123A
1A0076	123A
1A0077	123A
1A0078	123A
1A0079	123A
1A0080	123A
1A0081	123A
1A0083	123A
1A0084	123A
1A7.5M	138A
1A7.5MA	138A
1A8-1A82	160
1A9.1M	139A
1A9.1MA	139A
1A10M	140A
1A10MA	140A
1A12M	142A
1A12MA	142A
1A13M	143A
1A13MA	143A
1A15M	145A
1A15MA	145A
1A27M	146A
1A27MA	146A
1A33M	147A
1A33MA	147A
1A34	128
1A34R	128
1A35	519
1A50	116
1A52	5000A
1A53	5002A
1A54	5004A
1A55	5005A
1A56	5006A
1A56M	148A
1A56MA	148A
1A57	5007A
1A58	5008A
1A59	5009A
1A60	5010A
1A62	5013A
1A62M	149A
1A62MA	149A
1A82M	150A
1A82MA	150A
1A110M	151A
1A110MA	151A
1A348	128
1A348R	128
1A4757-1	123A
1A10425	116
1A11184	116
1A11306	109
1A11671	116
1A12214	116
1A12407	116
1A12688	139A
1A12689	109
1A12690	116
1A13219	116
1A13719	116
1A13720	116
1A14384	109
1A15790	116
1A16549	177
1A16550	116
1A16551	177
1A69425-1	519
1A99812-1001	519
1A1123100-1	181
1AC12	142A
1AC12A	142A
1AC12B	142A
1AC15	145A
1AC15A	145A

To Be Replaced	ECG Replacement
1AC15B	145A
1AC27	146A
1AC27A	146A
1AC27B	146A
1AC33	147A
1AC33A	147A
1AC33B	147A
1AC62	149A
1AC62A	149A
1AC62B	149A
1AC82	150A
1AC82A	150A
1AC82B	150A
1AC110	151A
1AC110A	151A
1AC110B	151A
1AMH2	525
1AS027	156
1AS029	156
1B	504
1B05	166
1B05J05	166
1B05J20	116
1B05J40	116
1B08T05	166
1B08T10	166
1B08T20	167
1B1	166
1B2	167
1B2C1	116(2)
1B-2C1	116
1B2Z1	116(2)
1B4	168
1B4B	5304
1B6	169
1B8	170
1B10	170
1B10J20	116
1B2992	519
1B3096-1	159
1B12421	5882
1C0009	116
1C0017	116
1C0020	138A
1C0025	116
1C0026	116
1C0029	109
1C0031	116
1C0038	5071A
1C0039	109
1C05	116(2)
1C1	116(2)
1C2	116(2)
1C4	116(2)
1C6	711
1C6(Diode)	116(2)
1C6(IC)	711
1C6(Rect)	116(2)
1C8	748
1C8(Diode)	125(2)
1C8(IC)	748
1C8(Rect)	125(2)
1C10	125(2)
1C12Z	142A
1C12ZA	142A
1C15Z	145A
1C15ZA	145A
1C21	782
1C27Z	146A
1C27ZA	146A
1C33Z	147A
1C33ZA	147A
1C62Z	149A
1C62ZA	149A
1C82Z	150A
1C82ZA	150A
1C110Z	151A
1C110ZA	151A
1C3576	123A
1C25681-A01	529
1C73045	235
1C744001	229
1C744002	229
1C744003	123A
1C744004	289
1C744005	161
1C744006	293
1C744007	297
1C744008	184
1C744009	236
1C744010	519
1C744012	109
1C744211	199
1C744213	519
1CC580C	1196
1CL-201A-TY	1171
1CL-301A-TY	1171
1CL-723C-TZ	923
1CL-741C-TY	941
1CL-741-LNC	941D
1CL-748C-TY	1171
1D08	145A
1D098-001V-022	177
1D1	116(2)
1D2	116(2)
1D2C1	116
1D2Z1	116
1D3.3	5066A
1D3.3A	5066A
1D3.3B	5066A
1D3.6	134A
1D3.6A	134A
1D3.6B	134A
1D3.9	5067A
1D3.9A	5067A

To Be Replaced	ECG Replacement
1D3.9B	5067A
1D4.3	5068A
1D4.3A	5068A
1D4.3B	5068A
1D4.7	5069A
1D4.7B	5069A
1D5.1	135A
1D5.1A	135A
1D5.1B	5116A
1D5.6	136A
1D5.6A	136A
1D5.6B	136A
1D6	116(2)
1D6.2	137A
1D6.2A	137A
1D6.2B	137A
1D6.2SA	137A
1D6.2SB	137A
1D8	125(2)
1D10	125(2)
1D27Z5	146A
1D100	5400
1D101	5401
1D102	5402
1D103	5403
1D104	5404
1D105	5405
1D106	5405
1D261	116
1DA1Z6.8B	5071A
1DA1Z8.2B	5072A
1DA1Z14B	144A
1DA1Z18B	5077A
1DA1Z22B	5080A
1DA1ZB	140A
1DAZ229B	5078A
1DAZ824C	137A
1DAZ3400B	5071A
1DAZ3401B	5072A
1DAZ3402B	140A
1DAZ3403B	142A
1DAZ3404B	145A
1DAZ3405B	5077A
1DAZ3406B	5080A
1DC1	116
1DG2	109
1-DI-007	177
1-DI-009	109
1DZ12	142A
1E05	116
1E1	116
1E2	116
1E2Z5	142A
1E3	116
1E4	116
1E5	116
1E6	116
1E7	125
1E7.5Z	138A
1E7.5Z10	138A
1E8	125
1E9.1Z	139A
1E9.1Z10	139A
1E10	125
1E10Z	140A
1E10Z10	140A
1E11Z	141A
1E11Z10	141A
1E12Z	142A
1E12Z5	142A
1E12Z10	142A
1E14Z	144A
1E14Z5	144A
1E14Z10	144A
1E15Z	145A
1E15Z5	145A
1E15Z10	145A
1E27Z	146A
1E27Z5	146A
1E27Z10	146A
1E33Z	147A
1E33Z5	147A
1E33Z10	147A
1E62Z	149A
1E62Z5	149A
1E62Z10	149A
1E82Z	150A
1E82Z5	150A
1E82Z10	150A
1E110Z	151A
1E110Z5	151A
1E110Z10	151A
1E535A	229
1E535A/7825B	229
1E535B	107
1E703E	703A
1EA10A	117
1EA20A	117
1EA30A	117
1EA40A	117
1EA50A	117
1EA60A	117
1EB10A	5872
1EB20A	5874
1EB30A	5876
1EB40A	5878
1EB60A	5882
1EB70A	5886
1EB80A	5886
1EB100A	5890
1ET02	116
1ET05	116
1ET1	116
1ET2	116
1ET3	116

To Be Replaced	ECG Replacement
1ET4	116
1ET5	116
1ET6	116
1ET7	125
1ET8	125
1ET10	125
1EZ3.6	134A
1EZ-5Z10	138A
1EZ5.1	135A
1EZ5.6	136A
1EZ7.5Z	138A
1EZ9.1	139A
1EZ12	142A
1EZ14D5	144A
1EZ15	145A
1EZ17D5	5076A
1EZ19D5	5078A
1EZ27	146A
1EZ110D5	151A
1EZ120D5	5097A
1EZ130D5	5098A
1EZ140D5	5099A
1EZ150D5	5100A
1EZ160D5	5101A
1EZ170D5	5102A
1EZ180D5	5103A
1EZ190D5	5104A
1EZ200D5	5105A
1F05	116
1F2	116
1F8	125
1F14A	116
1FM2	116
1G02	109
1G2C1	116
1G2Z1	116
1G8	125
1G100	105
1GA	116
1GD2	109
1GD2H	109
1GD4	109
1GD6	109
1HY40	116
1HY50	116
1HY80	125
1HY100	125
1J1	123A
1JZ61	125
1K2	5802
1K34A	109
1K60	109
1K60A	109
1K110	109
1K261	110MP
1LE11	156
1LF11	156
1M3.3AZ3	5005A
1M3.3AZ5	5066A
1M3.3ZS5	5066A
1M3.3ZS10	5066A
1M3.6AZ3	134A
1M3.6ZS5	134A
1M3.6ZS10	134A
1M3.9Z5	5067A
1M3.9ZS5	5067A
1M3.9ZS10	5067A
1M4.3AZ5	5068A
1M4.3ZS5	5068A
1M4.3ZS10	5068A
1M4.7ZS5	5069A
1M4.7ZS10	5069A
1M5.1AZ3	135A
1M5.1AZ5	5116A
1M5.1ZS5	5116A
1M5.1ZS10	135A
1M5.6AZ5	136A
1M5.6ZS5	136A
1M5.6ZS10	136A
1M6.2AZ5	137A
1M6.2ZS5	137A
1M6.2ZS10	137A
1M6.8AZ5	5071A
1M6.8Z	5071A
1M6.8Z5	5071A
1M6.8Z10	5071A
1M6.8ZS5	5071A
1M6.8ZS10	5071A
1M7.5AZ5	138A
1M7.5Z	138A
1M7.5Z5	138A
1M7.5Z10	138A
1M7.5ZS5	138A
1M7.5ZS10	138A
1M8.2Z	5072A
1M8.2Z5	5072A
1M8.2Z10	5072A
1M8.2ZS5	5072A
1M8.2ZS10	5072A
1M9.1Z	139A
1M9.1Z5	139A
1M9.1Z10	139A
1M9.1ZS5	139A
1M9.1ZS10	139A
1M10Z	140A
1M10Z5	140A
1M10Z10	140A
1M10ZS5	140A
1M10ZS10	140A
1M11Z	5074A
1M11Z5	5074A
1M11Z10	5074A
1M11ZS5	5074A
1M11ZS10	5074A
1M12Z	142A

To Be Replaced	ECG Replacement
1M12Z5	142A
1M12Z10	142A
1M12ZS5	142A
1M12ZS10	142A
1M13Z5	143A
1M13ZS5	143A
1M13ZS10	143A
1M14Z	144A
1M14Z5	144A
1M14Z10	144A
1M15Z	145A
1M15Z5	145A
1M15Z10	145A
1M15ZS5	145A
1M15ZS10	145A
1M16Z	5075A
1M16Z5	5075A
1M16ZS5	5075A
1M16ZS10	5075A
1M17Z	5076A
1M17Z5	5076A
1M17Z10	5076A
1M18Z	5077A
1M18Z5	5077A
1M18Z10	5077A
1M18ZS5	5077A
1M18ZS10	5077A
1M19Z	5078A
1M19Z5	5078A
1M19Z10	5078A
1M20Z	5079A
1M20Z3	5079A
1M20Z5	5079A
1M20Z10	5079A
1M20Z20	5079A
1M20ZS5	5097A
1M20ZS10	5079A
1M22Z	5080A
1M22Z5	5080A
1M22Z10	5080A
1M22ZS5	5080A
1M22ZS10	5080A
1M24Z	5081A
1M24Z5	5081A
1M24Z10	5081A
1M24ZS5	5081A
1M24ZS10	5081A
1M25Z	5082A
1M25Z5	5082A
1M25Z10	5082A
1M27Z	146A
1M27Z5	146A
1M27Z10	146A
1M27ZS5	146A
1M27ZS10	146A
1M30Z	5084A
1M30Z5	5084A
1M30Z10	5084A
1M30ZS5	5084A
1M30ZS10	5084A
1M33Z	147A
1M33Z5	147A
1M33Z10	147A
1M33ZS5	147A
1M36Z	5085A
1M36Z5	5085A
1M36Z10	5085A
1M36ZS5	5085A
1M36ZS10	5085A
1M39Z	5086A
1M39Z5	5086A
1M39Z10	5086A
1M39ZS5	5086A
1M39ZS10	5086A
1M43Z	5087A
1M43Z5	5087A
1M43Z10	5087A
1M43ZS5	5087A
1M43ZS10	5087A
1M47Z	5088A
1M47Z5	5088A
1M47Z10	5088A
1M47ZS5	5088A
1M47ZS10	5088A
1M51Z	5089A
1M51Z5	5089A
1M51Z10	5089A
1M51ZS5	5089A
1M51ZS10	5089A
1M56Z	5090A
1M56Z5	5090A
1M56Z10	5090A
1M56ZS5	5090A
1M56ZS10	5090A
1M62Z	149A
1M62Z5	149A
1M62Z10	149A
1M62ZS5	149A
1M62ZS10	149A
1M68Z	5092A
1M68Z3	5092A
1M68Z5	5092A
1M68Z10	5092A
1M68ZS5	5092A
1M68ZS10	5092A
1M75Z	5093A
1M75Z3	5093A
1M75Z5	5093A
1M75Z10	5093A
1M75ZS5	5093A
1M75ZS10	5093A
1M82Z	150A
1M82Z 1M82Z5	150A
1M82Z5	150A
1M82Z10	150A

To Be Replaced	ECG Replacement
1M82ZS5	150A
1M82ZS10	150A
1M91Z	5095A
1M91Z3	5095A
1M91Z5	5095A
1M91Z10	5095A
1M91ZS5	5095A
1M91ZS10	5095A
1M100Z	5096A
1M100Z5	5096A
1M100Z10	5096A
1M100ZS5	5096A
1M100ZS10	5096A
1M110Z	151A
1M110Z3	151A
1M110Z5	151A
1M110Z10	151A
1M110ZS5	151A
1M110ZS10	151A
1M120Z	5097A
1M120Z3	5097A
1M120Z5	5097A
1M120Z10	5097A
1M120ZS5	5097A
1M120ZS10	5097A
1M130Z	5098A
1M130Z3	5098A
1M130Z5	5098A
1M130Z10	5098A
1M130ZS5	5098A
1M130ZS10	5098A
1M140Z	5099A
1M140Z5	5099A
1M140Z10	5099A
1M150Z	5100A
1M150Z3	5100A
1M150Z5	5100A
1M150Z10	5100A
1M150ZS5	5100A
1M150ZS10	5100A
1M160Z	5101A
1M160Z3	5101A
1M160Z5	5101A
1M160Z10	5101A
1M160ZS5	5101A
1M160ZS10	5101A
1M180Z	5103A
1M180Z3	5103A
1M180Z5	5103A
1M180Z10	5103A
1M180ZS5	5103A
1M180ZS10	5103A
1M200Z	5105A
1M200Z3	5105A
1M200Z5	5105A
1M200Z10	5105A
1M200ZS5	5105A
1M200ZS10	5105A
1M753A	137A
1M8513A	116
1MZ10	5075A
1MZ110Z5	151A
1N1A13MA	143A
1N701	140A
1N10	109
1N10D-4F	116
1N22	109
1N31A	109
1N34	109
1N34A	109
1N34A-TFI	109
1N34A-Z	109
1N34AM	109
1N34AS	109
1N34G	109
1N34GA	109
1N34I	116
1N34M	110
1N34R	109
1N35	109
1N36	109
1N38	109
1N38A	109
1N38B	109
1N40	109
1N41	109
1N43	109
1N44	109
1N45	109
1N45A	109
1N46	109
1N46A	109
1N47	109
1N48	109
1N48A	109
1N50	109
1N51	109
1N52	109
1N52A	109
1N54	109
1N54A	109
1N54G	109
1N54GA	109
1N56	109
1N56A	109
1N57	109
1N57A	109
1N58	109
1N58A	109
1N60	109
1n60	109
1N60	109
1N60/0112-0028-6438	109
1N60-5	110
1N60/3490	109

To Be Replaced	ECG Replacement
1N60/4454C	109
1N60/7825B	110
1N60A	109
1N60AM	109
1N60-AM	109
1N60C	109
1N60C1	109
1N60D	109
1N60F	109
1N60FD1	109
1N60FM	109
1N60FM1	109
1N60FMX	109
1N60G	109
1N60GA	109
1N60GB	109
1N60IIB	5084A
1N60M	109
1N60-M3	109
1N60MP	110
1N60-MP	109
1N60-MPX-B	109
1N60N	109
1N60NMP	110MP
1N60P	109
1N60-P	109
1N60P-1	110(6)
1N60S	109
1N60-S	109
1N60SD60	109
1N60-T	109
1N60-TF1	109
1N60-TFI	109
1N60TFI	109
1N60TV	109
1N60(TV)(FA-1)	109
1N60TVGL	109
1N60-Z	109
1N62	109
1N63	109
1N63A	109
1N64	109
1N64A	109
1N64B	109
1N64G	109
1N64GA	109
1N65	109
1N65A	109
1N66	109
1N66A	109
1N67	109
1N67A	109
1N68	109
1N68A	109
1N69	109
1N69A	109
1N70	109
1N70A	109
1N71	109
1N72	109
1N72G	109
1N73	109
1N74	109
1N75A	109
1N76	109
1N76A	109
1N76C	109
1N76G	109
1N81	109
1N81A	109
1N82	112
1N82A	112
1N82AG	112
1N82D	112
1N82G	112
1N84	109
1N86	109
1N86AG	109
1N87	109
1N87A	109
1N87G	109
1N87GA	109
1N87S	109
1N87T	109
1N88	109
1N89	109
1N90	109
1N90G	109
1N90GA	109
1N91	116
1N92	116
1N93	116
1N93A	116
1N95	109
1N96	109
1N96A	109
1N97	109
1N97A	109
1N98	109
1N98A	109
1N99	109
1N99A	109
1N100	109
1N100A	109
1N103	109
1N104	109
1N105	109
1N107	109
1N108	109
1N109	109
1N110	112
1N111	109
1N112	109
1N113	109
1N114	109

To Be Replaced	ECG Replacement
1N115	109
1N116	109
1N116A	109
1N117	109
1N117A	109
1N118	109
1N118A	109
1N119	109
1N119A	109
1N120	109
1N120A	109
1N124	112
1N124A	112
1N125	109
1N126	109
1N126A	109
1N128	109
1N128A	109
1N132	109
1N133	109
1N134	109
1N135	177
1N137A	177
1N137B	177
1N138	177
1N138A	177
1N138B	177
1N139	109
1N140	109
1N142	109
1N143	109
1N144	109
1N145	109
1N147	112
1N147A	112
1N148	109
1N151	116
1N152	116
1N153	116
1N158	116
1N169	116
1N172	112
1N173	112
1N191	109
1N192	109
1N193	116
1N193A	5072A
1N194	177
1N194A	177
1N195	177
1N196	177
1N198	109
1N198A	109
1N198B	109
1N200	177
1N201	178
1N202	177
1N203	177
1N203CA	140A
1N204	177
1N204-2	5179A
1N205	177
1N206	178
1N207	178
1N208	177
1N209	178
1N210	177
1N211	177
1N212	177
1N213	177
1N214	177
1N215	177
1N216	177
1N217	177
1N218	177
1N225	5017A
1N225A	5017A
1N226	5019A
1N226A	5019A
1N227	143A
1N227A	143A
1N228	5025A
1N228A	5025A
1N229	5028A
1N229A	5078A
1N230	5031A
1N230A	5031A
1N231	5034A
1N231A	5034A
1N234	5040A
1N234A	5040A
1N235	5043A
1N237	5048A
1N239	5053A
1N248	5940
1N248A	5980
1N248AR	5981
1N248B	5980
1N248BR	5981
1N248C	5980
1N248CR	5981
1N248R	5941
1N249	5942
1N249A	5982
1N249AR	5983
1N249B	5982
1N249BR	5983
1N249C	5982
1N249CR	5983
1N249R	5943
1N250	5944
1N250A	5986
1N250AR	5987
1N250B	5986
1N250BR	5987

To Be Replaced	ECG Replacement
1N250C	5986
1N250CR	5987
1N250R	5945
1N251	177
1N251A	177
1N252	177
1N252A	177
1N253	116
1N254	116
1N255	116
1N256	116
1N265	109
1N266	109
1N267	109
1N268	109
1N270	109
1N273	109
1N276	109
1N277	109
1N278	109
1N279	109
1N281	109
1N282	109
1N283	109
1N285	109
1N287	109
1N288	109
1N289	109
1N290	109
1N292	109
1N294	109
1N294A	109
1N295	109
1N295A	109
1N295S	109
1N295X	109
1N296	109
1N297	109
1N297A	109
1N298	109
1N298A	109
1N299	112
1N299B	112
1N300	177
1N300A	177
1N300B	177
1N301	177
1N301A	177
1N301B	177
1N303	177
1N303A	177
1N303B	177
1N304	109
1N305	109
1N306	109
1N307	109
1N308	109
1N309	109
1N310	109
1N312	109
1N314	109
1N315	116
1N315A	116
1N316	116
1N316A	116
1N317	116
1N317A	116
1N318	116
1N318A	116
1N319	116
1N319A	116
1N320	116
1N320A	116
1N321	116
1N321A	125
1N322	125
1N322A	125
1N323	116
1N323A	116
1N324	116
1N324A	116
1N325	116
1N325A	116
1N326	116
1N326A	116
1N327	116
1N327A	116
1N328	125
1N328A	125
1N329	125
1N329A	125
1N330	178
1N331	177
1N332	116
1N332R	5839
1N333	116
1N333R	5839
1N334	116
1N334R	5837
1N335	116
1N335R	5837
1N336	116
1N336R	5835
1N337	116
1N337R	5837
1N338	116
1N338R	5833
1N339	116
1N339R	5833
1N340	116
1N340R	5833
1N341R	5839
1N342	116
1N342R	5839
1N343	116

To Be Replaced	ECG Replacement
1N343R	5837
1N344	116
1N344R	5837
1N345	116
1N345R	5835
1N346	116
1N346R	5835
1N347	116
1N347R	5833
1N348	116
1N348R	5833
1N349	116
1N349R	5833
1N350	177
1N351	177
1N352	177
1N353	178
1N354	116
1N355	109
1N359	117
1N359A	116
1N360	116
1N360A	116
1N361	116
1N361A	116
1N362	116
1N362A	116
1N363	116
1N363A	116
1N364	125
1N364A	125
1N365	125
1N365A	125
1N367	109
1N367B	109
1N371	5000A
1N372	5065A
1N373	134A
1N374	5008A
1N375	5008A
1N376	135A
1N377	5070A
1N378	5014A
1N379	178
1N380	177
1N381	177
1N382	177
1N383	177
1N384	178
1N385	178
1N386	177
1N387	178
1N388	178
1N389	177
1N390	177
1N391	177
1N392	177
1N393	177
1N394	177
1N400	116
1N400B	116
1N411B	6154
1N412B	6154
1N413B	6154
1N414B	177
1N417	109
1N418	109
1N419	109
1N429	137A
1N431	177
1N432	177
1N432A	177
1N432B	177
1N433	177
1N433A	177
1N433B	177
1N434	177
1N434A	177
1N434B	177
1N435	109
1N440	116
1N440B	116
1N441	116
1N441B	116
1N442	116
1N442B	116
1N443	116
1N443B	116
1N444	116
1N444A	519
1N444B	116
1N445	116
1N445B	116
1N446	109
1N447	109
1N448	116
1N449	109
1N450	116
1N451	116
1N452	109
1N453	116
1N454	109
1N455	109
1N456	177
1N456A	177
1N457	177
1N457A	177
1N457M	177
1N458	177
1N458A	177
1N458M	177
1N459	177
1N459A	177
1N459M	177
1N460	177

To Be Replaced	ECG Replacement
1N460A	177
1N460B	177
1N461	177
1N461A	177
1N462	177
1N462A	177
1N463	177
1N463A	177
1N464	177
1N464A	177
1N465	5002A
1N465A	5002A
1N466	5006A
1N466A	5066A
1N467	5007A
1N467A	5007A
1N468	5009A
1N468A	5009A
1N468B	135A
1N469	5014A
1N469A	5014A
1N470	5014A
1N470A	5014A
1N470B	5014A
1N471	134A
1N471A	5066A
1N472	5008A
1N472A	5008A
1N472B	5008A
1N473	135A
1N473A	135A
1N473B	135A
1N474	5012A
1N474A	5012A
1N474B	5012A
1N475	5014A
1N475A	5014A
1N475B	5014A
1N476	109
1N477	109
1N478	109
1N479	109
1N480	109
1N480B	116
1N482	177
1N482A	177
1N482B	177
1N482C	177
1N483	177
1N483A	177
1N483AM	177
1N483B	177
1N483BM	177
1N483C	177
1N484	177
1N484A	177
1N484B	177
1N484C	177
1N485	177
1N485A	177
1N485B	177
1N485C	177
1N486	177
1N486A	177
1N486B	177
1N487	506
1N487A	506
1N487B	506
1N488	506
1N488A	506
1N488B	506
1N492	141A
1N492A	141A
1N492B	141A
1N493	141A
1N493A	141A
1N493B	141A
1N497	109
1N498	109
1N500	109
1N503	116
1N504	116
1N505	116
1N506	116
1N507	116
1N508	116
1N509	125
1N510	125
1N511	116
1N512	116
1N513	116
1N514	116
1N515	116
1N516	116
1N517	125
1N518	125
1N519	116
1N520	116
1N521	116
1N522	116
1N522B	5067A
1N523	116
1N524	116
1N524DB	140A
1N525	125
1N526	125
1N527	109
1N530	116
1N531	116
1N532	116
1N533	116
1N534	116
1N535	116
1N536	116
1N537	116

To Be Replaced	ECG Replacement
1N538	116
1N539	116
1N540	116
1N541	110
1N542	110
1N543	506
1N543A	506
1N547	116
1N548	125
1N549	506
1N550	116
1N550R	5833
1N551	116
1N551R	5835
1N552	116
1N552R	5837
1N553	116
1N553R	5839
1N554	116
1N554R	5841
1N555	116
1N555R	5843
1N560	125
1N561	125
1N562	125
1N562R	5847
1N563	125
1N563R	5849
1N564	109
1N568	177
1N569	109
1N571	109
1N588A	5174A
1N596	116
1N597	125
1N598	125
1N599	116
1N599A	116
1N599B	5174A
1N600	116
1N600A	116
1N601	116
1N601A	116
1N602	116
1N602A	116
1N603	116
1N603A	116
1N604	116
1N604A	116
1N605	116
1N605A	116
1N606	116
1N606A	116
1N607	116
1N607A	116
1N608	116
1N608A	116
1N609	116
1N609A	116
1N610	116
1N610A	116
1N611	116
1N611A	116
1N612	116
1N612A	116
1N613	116
1N613A	116
1N614	116
1N614A	116
1N616	109
1N617	109
1N618	109
1N619	177
1N622	177
1N625	177
1N625A	177
1N625M	177
1N626	177
1N626A	177
1N626M	177
1N627	177
1N627A	177
1N628	177
1N628A	177
1N629	177
1N629A	177
1N631	109
1N632	109
1N633	177
1N636	109
1N643	177
1N643A	177
1N645	116
1N645A	116
1N645B	116
1N646	116
1N647	116
1N648	116
1N649	116
1N658	177
1N658A	177
1N658M	177
1N659	177
1N659A	177
1N660	177
1N660A	177
1N661	177
1N661A	177
1N662	177
1N662A	177
1N663	177
1N663A	177
1N663M	177
1N664	5072A
1N665	142A

To Be Replaced	ECG Replacement
1N666	145A
1N667	5077A
1N668	5080A
1N669	146A
1N670	5092A
1N671	5096A
1N672	5100A
1N673	116
1N674	5069A
1N675	137A
1N676	116
1N677	116
1N678	116
1N679	116
1N681	116
1N682	116
1N683	116
1N684	116
1N685	116
1N686	116
1N687	116
1N689	116
1N690	177
1N692	116
1N693	506
1N695	109
1N695A	109
1N696	177
1N697	177
1N698	109
1N701	5019A
1N702	5002A
1N702A	5002A
1N703	5006A
1N703A	5006A
1N704	5007A
1N704A	5007A
1N705	5009A
1N705A	5009A
1N706	5012A
1N706A	5012A
1N707	5014A
1N707A	5014A
1N707A(Zener)	5014A
1N708	5011A
1N708A	136A
1N709	137A
1N709A	137A
1N709B	137A
1N710	5014A
1N710A	5071A
1N711	5015A
1N711A	138A
1N712	5016A
1N712A	5072A
1N713	5018A
1N713A	139A
1N713B	139A
1N714	5019A
1N714A	140A
1N714B	5019A
1N715	5020A
1N715A	5074A
1N716	5021A
1N716A	142A
1N716B	142A
1N716(Zener)	5021A
1N717	5022A
1N717A	143A
1N718	5024A
1N718A	145A
1N718B	145A
1N719	5025A
1N719A	5075A
1N720	5027A
1N720A	5077A
1N720B	5027A
1N721	5029A
1N721A	5079A
1N722	5030A
1N722A	5080A
1N723	5031A
1N723A	5081A
1N724	5033A
1N724A	146A
1N724B	146A
1N725	5035A
1N725A	5084A
1N726	5036A
1N726A	147A
1N726B	5036A
1N727	5037A
1N727A	5085A
1N728	5086A
1N728A	5038A
1N729	5039A
1N729A	5087A
1N730	5040A
1N730A	5088A
1N731	5041A
1N731A	5089A
1N731B	5041A
1N732	5042A
1N732A	5090A
1N732B	5042A
1N733	149A
1N733A	149A
1N734	5045A
1N734A	5092A
1N734B	5045A
1N735	5046A
1N735A	5093A
1N735B	5046A
1N736	150A
1N736A	150A

To Be Replaced	ECG Replacement
1N737	5049A
1N737A	5095A
1N737B	5049A
1N738	5050A
1N738A	5096A
1N738B	5050A
1N739	151A
1N739A	151A
1N740	5052A
1N740A	5097A
1N741	5053A
1N741A	5098A
1N741B	5055A
1N742	5055A
1N742A	5100A
1N742B	5055A
1N743	5056A
1N743A	5101A
1N744	5058A
1N744A	5103A
1N744B	5058A
1N745	5060A
1N745A	5105A
1N745B	5060A
1N746	5005A
1N746A	5066A
1N747	5006A
1N747A	134A
1N747B	134A
1N748	5007A
1N748A	5067A
1N749	5008A
1N749A	5068A
1N750	5009A
1N750A	5069A
1N751	5010A
1N752	136A
1N752A	136A
1N752A-F	136A
1N753	5013A
1N753A	137A
1N753A-F	137A
1N754	140A
1N754A	5071A
1N754A-F	5071A
1N755	5015A
1N755A	5015A
1N756	5072A
1N756A	5072A
1N756A-F	5072A
1N757	5018A
1N757A	139A
1N757A-F	139A
1N758	5019A
1N758A	140A
1N758A-F	140A
1N759	5021A
1N759A	142A
1N759A-F	142A
1N760	177
1N761	5009A
1N761-1	5009A
1N761-2	135A
1N761A	135A
1N762	5012A
1N762-1	5011A
1N762-2	5070A
1N762A	136A
1N763	5015A
1N763-1	5014A
1N763-2	5014A
1N763-3	138A
1N764	5073A
1N764-1	5016A
1N764-3	5018A
1N765-1	140A
1N765-2	5074A
1N765A	140A
1N766	5022A
1N766-1	142A
1N766-2	143A
1N766-3	144A
1N766A	143A
1N767	5025A
1N767-1	145A
1N767-2	5075A
1N767-3	5076A
1N768	5028A
1N768-1	5077A
1N768-2	5078A
1N768-3	5079A
1N768A	5078A
1N769	5081A
1N769-1	5080A
1N769-2	5081A
1N769-3	5032A
1N769-4	5083A
1N770	109
1N771	109
1N771A	109
1N771B	109
1N772A	109
1N773	109
1N773A	109
1N774	109
1N774A	109
1N775	109
1N776	109
1N777	109
1N778	177
1N779	177
1N781	109
1N788	177
1N789	177
1N789M	177

To Be Replaced	ECG Replacement
1N790	177
1N790M	177
1N791	177
1N791M	177
1N792	177
1N792M	177
1N793	177
1N793M	177
1N794	177
1N795	177
1N796	177
1N797	177
1N798	177
1N799	177
1N800	177
1N801	177
1N802	177
1N803	177
1N804	177
1N805	109
1N806	177
1N807	177
1N808	177
1N809	177
1N810	177
1N811	177
1N811M	177
1N812	177
1N812M	177
1N813	177
1N813M	177
1N814	177
1N814M	177
1N815	177
1N815M	177
1N816	5070A
1N817	177
1N818	177
1N818M	177
1N819	116
1N821	137A
1N822	137A
1N822AG	112
1N823	137A
1N823A	137A
1N824	137A
1N825	137A
1N825A	137A
1N826	5014A
1N826A	5014A
1N827	137A
1N827A	137A
1N828	5014A
1N828A	5014A
1N829	137A
1N829A	137A
1N835	109
1N837	177
1N837A	177
1N838	177
1N839	177
1N840	177
1N840M	177
1N841	177
1N842	177
1N843	177
1N844	177
1N845	177
1N846	116
1N847	116
1N848	116
1N849	116
1N850	116
1N851	116
1N852	116
1N853	125
1N854	125
1N855	125
1N856	125
1N857	116
1N858	116
1N859	116
1N860	116
1N861	116
1N862	116
1N863	116
1N864	125
1N865	125
1N866	125
1N867	125
1N868	116
1N869	116
1N870	116
1N871	116
1N872	116
1N873	116
1N874	116
1N875	125
1N875A	5072A
1N876	125
1N877	125
1N878	125
1N879	116
1N880	116
1N881	116
1N882	116
1N883	116
1N884	116
1N885	116
1N886	125
1N887	125
1N888	125
1N889	125
1N890	177
1N891	177

To Be Replaced	ECG Replacement
1N892	177
1N893	506
1N897	177
1N898	177
1N899	177
1N900	177
1N901	177
1N902	177
1N903	177
1N903A	177
1N903AM	177
1N903M	177
1N904	177
1N904A	177
1N904AM	177
1N904M	177
1N905	177
1N905A	177
1N905AM	177
1N905M	177
1N906	177
1N906A	177
1N906AM	177
1N906M	177
1N907	177
1N907A	177
1N907AM	177
1N907M	177
1N908	177
1N908A	177
1N908AM	177
1N908M	177
1N909	109
1N910	109
1N911	109
1N914	519
1N914A	178
1N914B	177
1N914M	177
1N915	177
1N916	519
1N916A	177
1N916B	177
1N917	177
1N919	177
1N920	177
1N921	177
1N923	506
1N924	177
1N925	177
1N926	177
1N927	177
1N928	177
1N929	178
1N930	177
1N931	177
1N932	177
1N933	177
1N934	177
1N935	139A
1N935A	139A
1N935B	139A
1N938	139A
1N941	141A
1N941A	141A
1N941B	141A
1N942	141A
1N945	141A
1N945A	141A
1N945B	141A
1N946	141A
1N946A	141A
1N946B	141A
1N947	116
1N948	177
1N948B	5095A
1N949	109
1N957	5014A
1N957A	5014A
1N957B	5071A
1N957B-F	5071A
1N958	5015A
1N958A	5015A
1N958B	138A
1N958B-F	138A
1N959	5016A
1N959A	5016A
1N959B	5072A
1N959B-F	5072A
1N960	139A
1N960A	139A
1N960B	139A
1N960B-F	139A
1N961	140A
1N961A	140A
1N961B	140A
1N961B-F	140A
1N962	5020A
1N962A	5020A
1N962B	5074A
1N962B-F	5074A
1N963	5021A
1N963A	5021A
1N963B	142A
1N963B-F	142A
1N964	5022A
1N964A	146A
1N964B	143A
1N964B-F	143A
1N965	5024A
1N965A	5024A
1N965B	145A
1N965B-F	145A
1N966	5025A
1N966A	5025A

To Be Replaced	ECG Replacement
1N966B	5075A
1N966B-F	5075A
1N967	5027A
1N967A	5027A
1N967B	5077A
1N967B-F	5077A
1N968	5029A
1N968A	5029A
1N968B	5079A
1N968B-F	5079A
1N969	5080A
1N969A	5030A
1N969B	5080A
1N969B-F	5080A
1N970	5031A
1N970A	5031A
1N970B	5081A
1N970B-F	5081A
1N971	146A
1N971A	146A
1N971B	146A
1N971B-F	146A
1N972	5035A
1N972A	5035A
1N972B	5084A
1N972B-F	5084A
1N973	5036A
1N973A	5036A
1N973B	147A
1N973B-F	147A
1N974	5037A
1N974A	5037A
1N974B	5085A
1N974B-F	5085A
1N975	5038A
1N975A	5038A
1N975B	5086A
1N975B-F	5086A
1N976	5039A
1N976A	5039A
1N976B	5087A
1N976B-F	5087A
1N977	5040A
1N977A	5040A
1N977B	5088A
1N977B-F	5088A
1N978	5041A
1N978A	5041A
1N978B	5089A
1N978B-F	5089A
1N979	5042A
1N979A	5042A
1N979B	5090A
1N979B-F	5090A
1N980	5044A
1N980A	5044A
1N980B	149A
1N980B-F	149A
1N981	5045A
1N981A	5045A
1N981B	5092A
1N981B-F	5092A
1N982	5046A
1N982A	5046A
1N982B	5093A
1N982B-F	5093A
1N983	5047A
1N983A	5047A
1N983B	150A
1N984	5049A
1N984A	5049A
1N985	5050A
1N985A	5050A
1N985B	5096A
1N986	5051A
1N986A	5051A
1N986B	151A
1N987	5052A
1N987A	5052A
1N987B	5097A
1N988	5053A
1N988A	5053A
1N989	5055A
1N989A	5077A
1N989B	5100A
1N990	5056A
1N990A	5056A
1N990B	5101A
1N991	5058A
1N991A	5058A
1N991B	5103A
1N992	5060A
1N992A	5060A
1N992B	5105A
1N993	177
1N994	109
1N995	177
1N996	109
1N997	177
1N998	116
1N998B	5098A
1N999	177
1N1008	116
1N1028	116
1N1029	116
1N1030	116
1N1031	116
1N1032	116
1N1033	116
1N1034	5831
1N1035	5833
1N1036	5835
1N1037	5835
1N1038	5837
1N1039	5839

To Be Replaced	ECG Replacement
1N1040	5831
1N1041	5833
1N1042	5835
1N1043	5835
1N1044	5837
1N1045	5839
1N1046	5831
1N1047	5833
1N1048	5835
1N1049	5835
1N1050	5837
1N1051	5839
1N1052	116
1N1053	116
1N1054	166
1N1055	5802
1N1056	156
1N1057	156
1N1058	5851
1N1059	5853
1N1060	5855
1N1061	5855
1N1062	5857
1N1063	5859
1N1064	5851
1N1065	5853
1N1066	5854
1N1067	5854
1N1068	5856
1N1070	5851
1N1071	5853
1N1072	5855
1N1073	5855
1N1074	5857
1N1075	5859
1N1076	5913
1N1077	5895
1N1078	5944
1N1079	5897
1N1080	5946
1N1081	116
1N1081A	116
1N1082	116
1N1083	116
1N1084	116
1N1093	109
1N1095	116
1N1096	116
1N1100	116
1N1101	116
1N1102	116
1N1103	116
1N1104	116
1N1104R	5983
1N1105	116
1N1115	5832
1N1116	5834
1N1117	5836
1N1118	5838
1N1119	5840
1N1120	5842
1N1122A	116
1N1124	5834
1N1124A	5854
1N1124AR	5855
1N1124R	5835
1N1125	5836
1N1125A	5856
1N1125AR	5857
1N1125R	5837
1N1126	5838
1N1126A	5858
1N1126AR	5859
1N1126R	5839
1N1127	5840
1N1127A	5860
1N1127AR	5861
1N1127R	5841
1N1128	5842
1N1128A	5862
1N1128AR	5863
1N1128R	5843
1N1169	116
1N1169A	116
1N1183	5980
1N1183A	5980
1N1183AR	5981
1N1183R	5981
1N1183RA	5981
1N1184	5982
1N1184A	5982
1N1184AR	5983
1N1184R	5983
1N1184RA	5987
1N1185	5986
1N1185A	5986
1N1185AR	5987
1N1185R	5987
1N1186	5986
1N1186A	5986
1N1186AR	5987
1N1186R	5987
1N1186RA	5987
1N1187	5988
1N1187A	5988
1N1187AR	5989
1N1187R	5989
1N1187RA	5989
1N1188	5990
1N1188A	5990
1N1188AR	5991
1N1188R	5991
1N1188RA	5991
1N1189	5992
1N1189A	5992

To Be Replaced	ECG Replacement
1N1189AR	5993
1N1189R	5993
1N1189RA	5993
1N1190	5994
1N1190A	5994
1N1190AR	5995
1N1190R	5995
1N1190RA	5995
1N1191	5980
1N1191A	5980
1N1191AR	5981
1N1191R	5981
1N1191RA	5871
1N1192	5982
1N1192A	5982
1N1192AR	5983
1N1192R	5983
1N1193	5986
1N1193A	5986
1N1193AR	5987
1N1193R	5987
1N1194	5986
1N1194A	5986
1N1194AR	5987
1N1194R	5987
1N1195	5988
1N1195A	5988
1N1195AR	5989
1N1195R	5989
1N1196	5990
1N1196A	5990
1N1196AR	5991
1N1196R	5991
1N1197	5992
1N1197A	5992
1N1197AR	5993
1N1197R	5993
1N1198A	5994
1N1198AR	5995
1N1198R	5995
1N1199	5870
1N1199A	5870
1N1199AR	5871
1N1199B	5870
1N1199R	5871
1N1200	5872
1N1200A	5872
1N1200AR	5873
1N1200B	5872
1N1200BR	5873
1N1200R	5873
1N1200RA	5875
1N1201	5874
1N1201A	5874
1N1201AR	5875
1N1201B	5874
1N1201BR	5875
1N1201R	5875
1N1202	5874
1N1202A	5874
1N1202AR	5875
1N1202B	5874
1N1202BR	5875
1N1202R	5875
1N1202RA	5875
1N1203	5876
1N1203A	5876
1N1203AR	5877
1N1203B	5876
1N1203BR	5877
1N1203R	5877
1N1203RA	5877
1N1204	5878
1N1204A	5878
1N1204AR	5879
1N1204B	5878
1N1204BR	5879
1N1204R	5879
1N1204RA	5879
1N1205	5880
1N1205A	5880
1N1205AR	5881
1N1205B	5880
1N1205BR	5881
1N1205R	5881
1N1205RA	5881
1N1206	5882
1N1206A	5882
1N1206AR	5883
1N1206B	5882
1N1206BR	5883
1N1206R	5883
1N1206RA	5883
1N1217	116
1N1217A	116
1N1217B	116
1N1218	116
1N1218A	116
1N1218B	116
1N1219	116
1N1219A	116
1N1219B	116
1N1220	116
1N1220A	116
1N1220B	5802
1N1221	116
1N1221A	116
1N1221B	5803
1N1222	116
1N1222A	117
1N1222B	117
1N1223	116
1N1223A	5805
1N1223B	5805
1N1224	116

To Be Replaced	ECG Replacement
1N1224A	116
1N1224B	5806
1N1225	125
1N1225A	125
1N1225B	156
1N1226	125
1N1226A	125
1N1226B	156
1N1227	5830
1N1227A	5830
1N1227B	5830
1N1228	5832
1N1228A	5832
1N1228B	5832
1N1229	5834
1N1229A	5834
1N1229B	5834
1N1230	5834
1N1230A	5834
1N1230B	5834
1N1231	5836
1N1231A	5836
1N1231B	5836
1N1232	5838
1N1232A	5838
1N1232B	5838
1N1233	5840
1N1233A	5840
1N1233B	5840
1N1234	5842
1N1234A	5842
1N1234B	5842
1N1235	5846
1N1235A	5846
1N1235B	5846
1N1236	5846
1N1236B	5846
1N1251	116
1N1252	116
1N1253	116
1N1254	116
1N1254(West)	5980
1N1255	116
1N1255A	116
1N1255(West)	5982
1N1256	116
1N1256(West)	5986
1N1257	116
1N1257(West)	5988
1N1258	125
1N1258(West)	5990
1N1259	125
1N1259(West)	5992
1N1260	125
1N1260(West)	5994
1N1261	125
1N1301	5980
1N1302	5982
1N1304	5986
1N1306	5988
1N1313	5017A
1N1313A	5017A
1N1314	5020A
1N1314A	5020A
1N1315	5022A
1N1315A	5022A
1N1316	5025A
1N1316A	5025A
1N1317	5028A
1N1317A	5028A
1N1318	5031A
1N1318A	5031A
1N1319	5034A
1N1319A	5034A
1N1320	5036A
1N1320A	5036A
1N1321	5038A
1N1321A	5038A
1N1322	5040A
1N1322A	5040A
1N1323	5043A
1N1323A	5043A
1N1325	5048A
1N1325A	5094A
1N1327	5053A
1N1337-5	116
1N1341	5850
1N1341A	5850
1N1341AR	5851
1N1341B	5850
1N1341BR	5851
1N1341R	5851
1N1341RB	5851
1N1342	5852
1N1342A	5852
1N1342AR	5853
1N1342B	5852
1N1342BR	5853
1N1342R	5853
1N1342RB	5853
1N1343	5854
1N1343A	5854
1N1343AR	5855
1N1343B	5854
1N1343BR	5855
1N1343R	5855
1N1344	5854
1N1344A	5854
1N1344AR	5855
1N1344B	5854
1N1344BR	5855
1N1344R	5855
1N1344RB	5855
1N1345	5856
1N1345A	5856

To Be Replaced	ECG Replacement
1N1345AR	5857
1N1345B	5856
1N1345BR	5857
1N1345R	5857
1N1345RB	5857
1N1346	5858
1N1346A	5858
1N1346AR	5859
1N1346B	5858
1N1346BR	5859
1N1346R	5859
1N1346RB	5859
1N1347	5860
1N1347A	5860
1N1347AR	5861
1N1347B	5860
1N1347BR	5861
1N1347R	5861
1N1347RB	5861
1N1348	5862
1N1348A	5862
1N1348AR	5863
1N1348B	5862
1N1348BR	5863
1N1348R	5863
1N1348RB	5863
1N1351	5186A
1N1351A	5186A
1N1351B	5186A
1N1351C	5186A
1N1351R	5186AK
1N1351RA	5186AK
1N1351RB	5186AK
1N1352	5187A
1N1352A	5187A
1N1352B	5187A
1N1352C	5187A
1N1352R	5187AK
1N1352RA	5187AK
1N1352RB	5187AK
1N1353	5188A
1N1353A	5188A
1N1353B	5188A
1N1353C	5188A
1N1353R	5188AK
1N1353RA	5188AK
1N1353RB	5188AK
1N1354	5189A
1N1354A	5189A
1N1354B	5189A
1N1354C	5189A
1N1354R	5189AK
1N1354RA	5189AK
1N1354RB	5189AK
1N1355	5191A
1N1355A	5191A
1N1355B	5191A
1N1355C	5191A
1N1355R	5191AK
1N1355RA	5191AK
1N1355RB	5191AK
1N1356	5192A
1N1356A	5192A
1N1356B	5192A
1N1356C	5192A
1N1356R	5192AK
1N1356RA	5192AK
1N1356RB	5192AK
1N1357	5194A
1N1357A	5194A
1N1357B	5194A
1N1357R	5194AK
1N1357RA	5194AK
1N1357RB	5194AK
1N1358	5196A
1N1358A	5196A
1N1358B	5196A
1N1358R	5196AK
1N1358RA	5196AK
1N1358RB	5196AK
1N1359	5197A
1N1359A	5197A
1N1359B	5197A
1N1359R	5197AK
1N1359RA	5197AK
1N1359RB	5197AK
1N1360	5198A
1N1360A	5198A
1N1360B	5198A
1N1360R	5198AK
1N1360RA	5198AK
1N1360RB	5198AK
1N1361	5200A
1N1361A	5200A
1N1361B	5200A
1N1361R	5200AK
1N1361RA	5200AK
1N1361RB	5200AK
1N1362	5202A
1N1362A	5202A
1N1362B	5202A
1N1362R	5202AK
1N1362RA	5202AK
1N1362RB	5202AK
1N1363	5203A
1N1363A	5203A
1N1363B	5203A
1N1363R	5203AK
1N1363RA	5203AK
1N1363RB	5203AK
1N1364	5204A
1N1364A	5204A
1N1364B	5204A
1N1364R	5204AK
1N1364RA	5204AK

To Be Replaced	ECG Replacement
1N1364RB	5204AK
1N1365	5205A
1N1365A	5205A
1N1365B	5205A
1N1365R	5205AK
1N1365RA	5205AK
1N1365RB	5205AK
1N1366	5206A
1N1366A	5206A
1N1366B	5206A
1N1366R	5206AK
1N1366RA	5206AK
1N1366RB	5206AK
1N1367	5208A
1N1367A	5208A
1N1367B	5208A
1N1367R	5208AK
1N1367RA	5208AK
1N1367RB	5208AK
1N1368	5210A
1N1368A	5210A
1N1368B	5210A
1N1368R	5210AK
1N1368RA	5210AK
1N1368RB	5210AK
1N1369	5212A
1N1369A	5212A
1N1369B	5212A
1N1369R	5212AK
1N1369RA	5212AK
1N1369RB	5212AK
1N1370	5214A
1N1370A	5214A
1N1370B	5214A
1N1370R	5214AK
1N1370RA	5214AK
1N1370RB	5214AK
1N1371	5215A
1N1371A	5215A
1N1371B	5215A
1N1371R	5215AK
1N1371RA	5215AK
1N1371RB	5215AK
1N1372	5216A
1N1372A	5216A
1N1372B	5216A
1N1372R	5216AK
1N1372RA	5216AK
1N1372RB	5216AK
1N1373	5217A
1N1373A	5217A
1N1373B	5217A
1N1373R	5217AK
1N1373RA	5217AK
1N1373RB	5217AK
1N1374	5219A
1N1374A	5219A
1N1374B	5219A
1N1374R	5219AK
1N1374RA	5219AK
1N1374RB	5219AK
1N1375	5220A
1N1375A	5220A
1N1375B	5220A
1N1375R	5220AK
1N1375RA	5220AK
1N1375RB	5220AK
1N1391	109
1N1396	6050
1N1399	6026
1N1401	6060
1N1406	116
1N1407	125
1N1408	125
1N1409	506
1N1415	116
1N1416	5183A
1N1417	5188A
1N1418	5191A
1N1419	5194A
1N1420	5197A
1N1421	5200A
1N1422	5215A
1N1423	5220A
1N1424	5226A
1N1425	5072A
1N1426	142A
1N1427	145A
1N1428	5077A
1N1429	5080A
1N1430	146A
1N1431	5092A
1N1432	5096A
1N1433	5100A
1N1434	5980
1N1435	5982
1N1436	5986
1N1437	5990
1N1438	5994
1N1439	116
1N1440	116
1N1441	116
1N1442	116
1N1443	125
1N1443A	125
1N1443B	5848
1N1444	5848
1N1444A	5848
1N1444B	5848
1N1446	5832
1N1447	5834
1N1448	5836
1N1449	5838
1N1450	5832
1N1451	5834

To Be Replaced	ECG Replacement
1N1452	5836
1N1453	5838
1N1482	5176A
1N1483	5180A
1N1484	5069A
1N1485	137A
1N1486	116
1N1487	116
1N1488	116
1N1489	116
1N1490	116
1N1491	116
1N1492	116
1N1507	5067A
1N1507A	5067A
1N1508	5069A
1N1508A	5069A
1N1509	136A
1N1509A	136A
1N1510	5071A
1N1510A	5071A
1N1511	5072A
1N1511A	5072A
1N1512	140A
1N1512A	140A
1N1513	142A
1N1513A	142A
1N1514	145A
1N1514A	145A
1N1515	5077A
1N1515A	5077A
1N1516	5080A
1N1516A	5080A
1N1517	146A
1N1517A	146A
1N1518	5067A
1N1518A	5067A
1N1519	5069A
1N1519A	5069A
1N1520	136A
1N1520A	136A
1N1521	5071A
1N1521A	5071A
1N1522	5072A
1N1522A	5072A
1N1523	140A
1N1523A	140A
1N1524	142A
1N1524A	142A
1N1525	145A
1N1525A	145A
1N1526	5077A
1N1526A	5077A
1N1527	5080A
1N1527A	5080A
1N1528	146A
1N1528A	146A
1N1530	5073A
1N1530A	5073A
1N1537	5830
1N1537R	5831
1N1538R	5833
1N1539	116
1N1539R	5835
1N1540	116
1N1540R	5835
1N1541	116
1N1541R	5837
1N1542	116
1N1542R	5839
1N1543	116
1N1543R	5841
1N1544	116
1N1544R	5843
1N1551	5832
1N1552	5834
1N1553	5836
1N1554	5838
1N1555	5840
1N1556	5801
1N1557	5802
1N1558	5803
1N1559	5804
1N1560	5805
1N1561	109
1N1562	109
1N1563	5801
1N1563A	116
1N1564	5802
1N1564A	116
1N1565	5803
1N1565A	116
1N1566	5804
1N1566A	116
1N1567	5805
1N1567A	116
1N1568	5806
1N1568A	116
1N1575	5046A
1N1581	5830
1N1581R	5831
1N1582	5832
1N1582R	5833
1N1583	5834
1N1583R	5835
1N1584	5836
1N1584R	5837
1N1585	5838
1N1585R	5839
1N1586	5840
1N1586R	5841
1N1587	5842
1N1587R	5843
1N1588	5174AK
1N1588A	5174AK

To Be Replaced	ECG Replacement
1N1589	5176AK
1N1589A	5176AK
1N1590	5178AK
1N1590A	5178AK
1N1591	5181AK
1N1591A	5181AK
1N1592	5183AK
1N1592A	5183AK
1N1593	5186AK
1N1593A	5186A
1N1594	5188AK
1N1594A	5188AK
1N1595	5191AK
1N1595A	5191A
1N1596	5194AK
1N1596A	5194A
1N1597	5197AK
1N1597A	5197A
1N1598	5200AK
1N1598A	5200A
1N1599	5174AK
1N1600	5176AK
1N1600A	5176A
1N1601	5178AK
1N1602	5181AK
1N1602A	5181A
1N1603	5183AK
1N1603A	5183A
1N1604	5186AK
1N1604A	5186A
1N1605	5188AK
1N1605A	5188A
1N1606	5191AK
1N1606A	5191A
1N1607	5194AK
1N1608	5197AK
1N1608A	5197A
1N1609	5200AK
1N1609A	5200A
1N1612	5850
1N1612A	5850
1N1612AR	5851
1N1612R	5870
1N1612(Rev. Pol.)	5851
1N1613	5852
1N1613A	5852
1N1613AR	5853
1N1613R	5872
1N1613(Rev. Pol.)	5853
1N1614	5854
1N1614A	5854
1N1614AR	5855
1N1614R	5874
1N1614(Rev. Pol.)	5855
1N1615	5858
1N1615A	5858
1N1615AR	5859
1N1615R	5878
1N1615 Rev. Pol.)	5859
1N1616	5861
1N1616A	5862
1N1616AR	5863
1N1616R	5882
1N1616(Rev. Pol.)	5863
1N1617	116
1N1618	116
1N1619	116
1N1620	116
1N1621	5872
1N1622	5874
1N1623	5876
1N1624	5878
1N1630	177
1N1638	177
1N1644	5800
1N1645	5801
1N1646	5802
1N1647	5802
1N1648	5803
1N1649	5803
1N1650	5804
1N1651	5804
1N1652	5805
1N1653	5806
1N1692	116
1N1693	116
1N1694	116
1N1695	116
1N1696	116
1N1697	116
1N1701	116
1N1702	116
1N1703	116
1N1704	116
1N1705	116
1N1706	116
1N1707	116
1N1708	116
1N1709	116
1N1710	116
1N1711	116
1N1712	116
1N1730	125
1N1730A	125
1N1731A	525
1N1735	137A
1N1736	5021A
1N1736A	5021A
1N1737	5078A
1N1737A	5078A
1N1738	5082A
1N1738A	5082A
1N1739	5084A
1N1739A	5084A
1N1741	5145A

To Be Replaced	ECG Replacement
1N1741A	5145A
1N1742	5147A
1N1742A	5147A
1N1744	140A
1N1763	116
1N1763A	5804
1N1764	116
1N1764A	5805
1N1765	135A
1N1765A	136A
1N1766	137A
1N1766A	137A
1N1767	5071A
1N1767A	5071A
1N1768	138A
1N1768A	138A
1N1769	5072A
1N1769A	5072A
1N1770	139A
1N1770A	139A
1N1771	140A
1N1771A	140A
1N1772	5074A
1N1772A	5074A
1N1773	142A
1N1773A	142A
1N1774	143A
1N1774A	143A
1N1775	145A
1N1775A	145A
1N1776	5075A
1N1776A	5075A
1N1777	5077A
1N1777A	5077A
1N1778	5079A
1N1778A	5079A
1N1779	5070A
1N1779A	5079A
1N1780	5081A
1N1780A	5079A
1N1781	146A
1N1781A	146A
1N1782	5084A
1N1782A	5084A
1N1783	143A
1N1783A	147A
1N1784	5085A
1N1784A	5085A
1N1785	5086A
1N1785A	5086A
1N1786	5087A
1N1786A	5087A
1N1787	5088A
1N1787A	5088A
1N1788	5089A
1N1788A	5089A
1N1789	5090A
1N1789A	5090A
1N1790	149A
1N1790A	149A
1N1791	5092A
1N1791A	5092A
1N1792	5093A
1N1792A	5093A
1N1793	150A
1N1793A	150A
1N1794	5095A
1N1794A	5095A
1N1795	5096A
1N1795A	5096A
1N1796	151A
1N1796A	151A
1N1797	5097A
1N1797A	5097A
1N1798	5098A
1N1798A	5098A
1N1799	5100A
1N1799A	5100A
1N1800	5101A
1N1800A	5101A
1N1801	5103A
1N1801A	5103A
1N1802	5105A
1N1802A	5105A
1N1803	5178A
1N1803A	5178A
1N1804	5180A
1N1804A	5180A
1N1805	5181A
1N1805A	5181A
1N1806	5182A
1N1806A	5182A
1N1807	5183A
1N1807A	5183A
1N1808	5185A
1N1808A	5185A
1N1808B	5185A
1N1808C	5185A
1N1809	5222A
1N1809A	5222A
1N1809R	5222AK
1N1810	5223A
1N1810A	5223A
1N1810R	5223AK
1N1811	5224A
1N1811A	5224A
1N1811R	5224AK
1N1812	5226A
1N1812A	5226A
1N1812R	5226AK
1N1813	5227A
1N1813R	5227AK
1N1814	5230A
1N1814A	5230A
1N1814R	5230AK

To Be Replaced	ECG Replacement
1N1815	5232A
1N1815A	5232A
1N1815R	5232AK
1N1816	5189A
1N1816A	5189A
1N1816CA	5189A
1N1817	5191A
1N1817A	5191A
1N1817C	5191A
1N1817CA	5191A
1N1818	5192A
1N1818A	5192A
1N1818CA	5192A
1N1819	5194A
1N1819A	5194A
1N1819CA	5194A
1N1820	5196A
1N1820A	5196A
1N1820CA	5196A
1N1821	5197A
1N1821A	5197A
1N1821CA	5197A
1N1822	5198A
1N1822A	5198A
1N1822CA	5198A
1N1823	5200A
1N1824	5202A
1N1824A	5202A
1N1825	5203A
1N1825A	5203A
1N1826	5204A
1N1826A	5204A
1N1827	5205A
1N1828	5206A
1N1828A	5206A
1N1829	5208A
1N1829A	5208A
1N1830	5210A
1N1830A	5210A
1N1831	5212A
1N1831A	5212A
1N1832	5214A
1N1832A	5214A
1N1833	5215A
1N1833A	5215A
1N1834	5216A
1N1834A	5216A
1N1835	5217A
1N1835A	5217A
1N1836	5219A
1N1836A	5219A
1N1839	177
1N1840	177
1N1841	177
1N1842	178
1N1843	177
1N1844	177
1N1845	177
1N1846	177
1N1847	177
1N1872A	5205A
1N1875	5072A
1N1875A	5072A
1N1875B	5072A
1N1876	140A
1N1876A	140A
1N1877	142A
1N1877A	142A
1N1878	145A
1N1878A	145A
1N1879	5077A
1N1879A	5077A
1N1880	5080A
1N1880A	5080A
1N1881	146A
1N1881A	146A
1N1882	147A
1N1882A	147A
1N1883	5086A
1N1883A	5086A
1N1884	5088A
1N1884A	5088A
1N1885	5090A
1N1885A	5090A
1N1886	5092A
1N1886A	5092A
1N1887	150A
1N1887A	150A
1N1888	5096A
1N1888A	5096A
1N1889	5097A
1N1889A	5223A
1N1890	5100A
1N1891	5183A
1N1891A	5183A
1N1892	5186A
1N1892A	5186A
1N1893	5188A
1N1893A	5188A
1N1894	5191A
1N1894A	5191A
1N1895	5194A
1N1895A	5194A
1N1896	5197A
1N1896A	5197A
1N1897	5200A
1N1897A	5200A
1N1898	5203A
1N1898A	5203A
1N1899	5205A
1N1899A	5205A
1N1900	5208A
1N1900A	5208A
1N1901	5212A
1N1901A	5212A

To Be Replaced	ECG Replacement
1N1902	5215A
1N1902A	5215A
1N1903	5217A
1N1903A	5217A
1N1904	5221A
1N1904A	5220A
1N1905	5223A
1N1906	5226A
1N1907	116
1N1908	116
1N1909	116
1N1910	5803
1N1911	116
1N1912	116
1N1913	116
1N1914	125
1N1915	125
1N1916	125
1N1917	5850
1N1927	5007A
1N1927A	5067A
1N1928	5009A
1N1928A	5069A
1N1929	5011A
1N1929A	136A
1N1929B	5011A
1N1930	5014A
1N1930A	5071A
1N1931	5016A
1N1932	5019A
1N1932A	140A
1N1932B	140A
1N1933	5021A
1N1933A	142A
1N1934	5024A
1N1934A	145A
1N1934B	145A
1N1935	5027A
1N1935A	5077A
1N1936	5030A
1N1936A	5080A
1N1937	5033A
1N1937A	146A
1N1937B	146A
1N1938	5036A
1N1938A	147A
1N1938B	147A
1N1939	5038A
1N1939A	5086A
1N1940	5040A
1N1940A	5088A
1N1941	5042A
1N1941A	5090A
1N1942	5042A
1N1942A	5092A
1N1943	5047A
1N1943A	150A
1N1943B	150A
1N1944	5050A
1N1944A	5096A
1N1945	5052A
1N1945A	5097A
1N1946	5055A
1N1947	5058A
1N1947A	5103A
1N1954	5007A
1N1954A	5007A
1N1954B	5007A
1N1955	5009A
1N1955A	5069A
1N1956	5011A
1N1957	5014A
1N1958	5016A
1N1959	5019A
1N1960	5021A
1N1960A	142A
1N1960B	142A
1N1961	5023A
1N1962	5027A
1N1962A	5077A
1N1963	5030A
1N1963A	5080A
1N1964	5033A
1N1964A	146A
1N1964B	146A
1N1965	5036A
1N1965A	147A
1N1965B	147A
1N1966	5038A
1N1967	5040A
1N1968	5042A
1N1969	5045A
1N1970	5047A
1N1971	5050A
1N1972	5052A
1N1973	5055A
1N1974	5058A
1N1975	5051(2)
1N1981	5007A
1N1981A	5067A
1N1981B	5007A
1N1982	5009A
1N1982A	5069A
1N1983	5011A
1N1983A	136A
1N1983B	5011A
1N1984	5014A
1N1984A	5071A
1N1985	5016A
1N1985A	5072A
1N1986	5019A
1N1986A	140A
1N1986B	140A
1N1987	5021A
1N1987A	142A

To Be Replaced	ECG Replacement
1N1988	5024A
1N1988A	145A
1N1988B	145A
1N1989	5027A
1N1990	5030A
1N1990A	5080A
1N1991	5033A
1N1991A	146A
1N1991B	146A
1N1992	5036A
1N1992A	147A
1N1992B	147A
1N1993	5038A
1N1993A	5086A
1N1994	5040A
1N1994A	5088A
1N1995	5042A
1N1995A	5090A
1N1996	5045A
1N1996A	5092A
1N1997	5047A
1N1997A	150A
1N1998	5050A
1N1998A	5096A
1N1999	5052A
1N1999A	5097A
1N2000	5055A
1N2000A	5100A
1N2001	5058A
1N2001A	5103A
1N2001B	5058A
1N2008	5220A
1N2008A	5220A
1N2009	5222A
1N2009A	5222A
1N2010	5223A
1N2010A	5223A
1N2011	5224A
1N2011A	5224A
1N2012	5226A
1N2012A	5226A
1N2013	5800
1N2014	5801
1N2015	5802
1N2016	5802
1N2017	5803
1N2018	5803
1N2019	5804
1N2020	5804
1N2021	5944
1N2022	5946
1N2023	5946
1N2024	5948
1N2025	5948
1N2026	5830
1N2027	5834
1N2028	5836
1N2029	5838
1N2030	5840
1N2031	5842
1N2032	5069A
1N2032-2	135A
1N2032A	5069A
1N2033	5070A
1N2033-2	5070A
1N2033A	136A
1N2034	5071A
1N2034-2	5071A
1N2034-3	138A
1N2034A	5071A
1N2035-1	139A
1N2035-12	5073A
1N2035A	5072A
1N2036	140A
1N2036-1	140A
1N2036-2	5074A
1N2036A	140A
1N2037	143A
1N2037-1	142A
1N2037-2	143A
1N2037-3	144A
1N2037A	142A
1N2038	5075A
1N2038-1	145A
1N2038-2	5075A
1N2038-3	5076A
1N2038A	145A
1N2039	5078A
1N2039-1	5077A
1N2039-2	5078A
1N2039-3	5079A
1N2039A	5077A
1N2040	5081A
1N2040-1	5080A
1N2040-2	5081A
1N2040-3	5082A
1N2040-4	5083A
1N2040A	5080A
1N2041	5176A
1N2041-1	5176AK
1N2041-2	5177A
1N2041A	5176A
1N2041B	5177AK
1N2041C	5177AK
1N2042	5179AK
1N2042-1	5178AK
1N2042-2	5179AK
1N2042A	5178AK
1N2042B	5179AK
1N2042C	5179AK
1N2043	5181AK
1N2043-1	5181AK
1N2043-2	5181AK
1N2043-3	5182AK
1N2043B	5181AK

To Be Replaced	ECG Replacement
1N2043C	5182AK
1N2044	5184AK
1N2044-1	5183AK
1N2044-2	5184AK
1N2044-3	5185AK
1N2044B	5184AK
1N2044C	5184AK
1N2045	5186AK
1N2045-1	5186A
1N2045-2	5187AK
1N2045A	5186AK
1N2045B	5186AK
1N2045C	5186AK
1N2046	5189A
1N2046-1	5188A
1N2046-2	5189AK
1N2046-3	5190AK
1N2046A	5188AK
1N2046B	5189AK
1N2046C	5190AK
1N2047	5192AK
1N2047-1	5191A
1N2047-2	5192AK
1N2047-3	5193AK
1N2047A	5191AK
1N2047B	5192AK
1N2047C	5193AK
1N2048	5195AK
1N2048-1	5194A
1N2048-2	5195AK
1N2048-3	5196AK
1N2048A	5194AK
1N2048B	5195AK
1N2048C	5195AK
1N2049	5198AK
1N2049-1	5197A
1N2049-2	5198AK
1N2049-3	5200AK
1N2049-4	5201AK
1N2049A	5197A
1N2049B	5198AK
1N2049C	5082A
1N2054	6354
1N2055	6354
1N2056	6354
1N2057	6354
1N2058	6354
1N2059	6354
1N2060	6354
1N2061	6354
1N2062	6356
1N2063	6356
1N2064	6356
1N2065	6358
1N2066	6358
1N2067	6358
1N2068	6358
1N2069	116
1N2069A	116
1N2070	116
1N2070A	116
1N2071	116
1N2071A	116
1N2072	116
1N2073	116
1N2074	116
1N2075	116
1N2075K	177
1N2076	116
1N2077	116
1N2078	116
1N2079	116
1N2080	116
1N2081	116
1N2082	116
1N2083	116
1N2084	116
1N2085	116
1N2086	116
1N2088	116
1N2089	116
1N2090	116
1N2091	116
1N2092	116
1N2093	116
1N2094	116
1N2095	116
1N2096	116
1N2103	116
1N2104	116
1N2105	116
1N2106	116
1N2107	116
1N2108	116
1N2109	5830
1N2115	116
1N2116	116
1N2117	116
1N2128	6020
1N2128A	6020
1N2128AR	6021
1N2128R	6021
1N2129	6022
1N2129A	6022
1N2129AR	6023
1N2129R	6023
1N2130	6026
1N2130A	6026
1N2130AR	6027
1N2130R	6027
1N2131	6026
1N2131A	6026
1N2131AR	6027
1N2131R	6027
1N2132	6030

To Be Replaced	ECG Replacement
1N2132A	6030
1N2132AR	6031
1N2132R	6031
1N2133	6030
1N2133A	6030
1N2133AR	6031
1N2133R	6031
1N2134	6034
1N2134A	6034
1N2134AR	6035
1N2134R	6035
1N2135	6034
1N2135A	6034
1N2135AR	6035
1N2135R	6035
1N2136	6038
1N2136A	6038
1N2136AR	6039
1N2136R	6039
1N2137	6038
1N2137A	6038
1N2137AR	6039
1N2137R	6039
1N2138	6040
1N2138A	6040
1N2138AR	6041
1N2138R	6041
1N2139	6040
1N2139A	6040
1N2139AR	6041
1N2139R	6041
1N2147	5850
1N2147A	5850
1N2148	5852
1N2148A	5852
1N2149	5854
1N2149A	5854
1N2150	5856
1N2150A	5856
1N2151	5860
1N2151A	5858
1N2152A	5860
1N2153	5862
1N2153A	5862
1N2154	5980
1N2154R	5981
1N2155	5982
1N2155R	5983
1N2156	5986
1N2156R	5987
1N2157	5988
1N2157R	5989
1N2158	5990
1N2158R	5991
1N2159	5992
1N2159R	5993
1N2160	5994
1N2160R	5995
1N2172	6154
1N2173	6154
1N2174	6154
1N2214	136A
1N2216	5830
1N2217	5830
1N2218	5840
1N2219	5840
1N2220	5842
1N2221	5842
1N2222	5846
1N2222A	5846
1N2223	5846
1N2223A	5846
1N2224	5848
1N2224A	5848
1N2225	5848
1N2225A	5848
1N2228	5850
1N2228A	5850
1N2229	5850
1N2229A	5850
1N2230	5854
1N2230A	5854
1N2231	5854
1N2231A	5854
1N2232	5856
1N2232A	5856
1N2233	5856
1N2233A	5856
1N2234	5850
1N2234A	5850
1N2235	5858
1N2235A	5858
1N2236	5860
1N2236A	5860
1N2237	5860
1N2237A	5860
1N2238	5862
1N2238A	5862
1N2239	5862
1N2239A	5862
1N2240	5866
1N2240A	5866
1N2241	5866
1N2241A	5866
1N2242	5868
1N2242A	5868
1N2243	5868
1N2243A	5868
1N2246	5870
1N2246A	5870
1N2247	5870
1N2247A	5870
1N2248	5872
1N2248A	5872
1N2249	5872
1N2249A	5872
1N2250	5874
1N2250A	5874
1N2251	5874
1N2251A	5874
1N2252	5876
1N2252A	5876
1N2253	5876
1N2253A	5876
1N2254	5878
1N2254A	5878
1N2255	5878
1N2255A	5878
1N2256	5880
1N2256A	5880
1N2257	5880
1N2257A	5880
1N2258	5882
1N2258A	5882
1N2259	5882
1N2259A	5882
1N2260	5886
1N2260A	5886
1N2261	5886
1N2261A	5886
1N2262	5890
1N2262A	5890
1N2263	5890
1N2263A	5890
1N2266	5830
1N2267	5830
1N2268	5840
1N2269	5840
1N2270	5842
1N2271	5842
1N2272	5912
1N2273	5914
1N2274	5916
1N2275	5918
1N2276	5922
1N2277	5924
1N2278	5928
1N2279	5928
1N2280	5932
1N2282	5988
1N2283	5990
1N2284	5992
1N2285	5994
1N2286	5998
1N2287	6002
1N2289	5830
1N2289A	5830
1N2290	5830
1N2290A	5830
1N2291	5834
1N2291A	5836
1N2292	5836
1N2292A	5836
1N2293	5838
1N2293A	5838
1N2323	116
1N2326	604
1N2327	506
1N2348	5830
1N2349	5832
1N2350	5834
1N2357	506
1N2372	5848
1N2373	5806
1N2374	5808
1N2387	5084A
1N2390	5800
1N2391	5801
1N2392	5802
1N2393	5803
1N2394	5804
1N2395	5805
1N2396	5806
1N2397	5808
1N2398	5808
1N2399	5800
1N2400	5801
1N2401	5802
1N2402	5803
1N2403	5804
1N2404	5805
1N2405	5806
1N2406	5808
1N2407	5808
1N2408	5800
1N2409	5801
1N2410	5802
1N2411	5803
1N2412	5804
1N2413	5805
1N2414	5806
1N2415	5808
1N2416	5808
1N2426	6154
1N2427	6154
1N2428	6154
1N2429	6154
1N2430	6154
1N2431	6154
1N2432	6154
1N2433	6154
1N2434	6156
1N2435	6156
1N2436	6154
1N2437	6154
1N2438	6154
1N2439	6154
1N2440	6154
1N2443	6154
1N2444	6156
1N2445	6156
1N2446	6020
1N2447	6022
1N2448	6026
1N2450	6030
1N2451	6030
1N2452	6034
1N2453	6034
1N2454	6038
1N2455	6040
1N2456	6042
1N2457	6042
1N2458	6020
1N2459	6022
1N2460	6026
1N2461	6026
1N2462	6030
1N2463	6030
1N2464	6034
1N2465	6034
1N2466	6038
1N2467	6040
1N2468	6042
1N2469	6042
1N2473	177
1N2482	116
1N2483	116
1N2484	116
1N2485	116
1N2486	116
1N2487	116
1N2488	116
1N2489	116
1N2491	5850
1N2492	5852
1N2493	5854
1N2494	5856
1N2495	5858
1N2496	5860
1N2497	5862
1N2498	5186A
1N2498A	5186A
1N2498C	5186A
1N2498CA	5186A
1N2498R	5186AK
1N2498RA	5186AK
1N2498RC	5186AK
1N2499	5187A
1N2499A	5187A
1N2499C	5187A
1N2499CA	5187A
1N2499R	5187AK
1N2499RA	5187AK
1N2499RC	5187AK
1N2500	5188A
1N2500A	5188A
1N2500C	5188A
1N2500CA	5188A
1N2500R	5188AK
1N2500RA	5188AK
1N2500RC	5188AK
1N2501	5808
1N2502	5809
1N2503	506
1N2504	506
1N2505	5808
1N2506	5809
1N2507	506
1N2508	506
1N2512	5832
1N2513	5834
1N2514	5836
1N2515	5838
1N2516	5860
1N2517	5842
1N2518	5832
1N2519	5854
1N2520	5836
1N2521	5838
1N2522	5860
1N2523	5842
1N2524	5830
1N2525	5832
1N2526	5834
1N2527	5836
1N2528	5838
1N2529	5840
1N2530	5842
1N2531	5846
1N2532	5846
1N2533	5848
1N2534	5848
1N2535	5830
1N2536	5832
1N2537	5834
1N2538	5836
1N2539	5838
1N2540	5840
1N2541	5842
1N2542	5846
1N2543	5846
1N2544	5848
1N2545	5848
1N2546	5830
1N2547	5832
1N2548	5834
1N2549	5836
1N2550	5838
1N2551	5840
1N2552	5842
1N2553	5846
1N2554	5846
1N2555	5848
1N2556	5848
1N2557	5866
1N2558	5866
1N2559	5868
1N2560	5868
1N2561	5866
1N2562	5866
1N2563	5868
1N2564	5868
1N2565	5850
1N2566	5852
1N2567	5854
1N2568	5856
1N2569	5858
1N2570	5860
1N2571	5862
1N2572	5866
1N2573	5866
1N2574	5868
1N2575	5868
1N2576	5870
1N2577	5872
1N2578	5874
1N2579	5876
1N2580	5878
1N2581	5880
1N2582	5882
1N2583	5886
1N2584	5886
1N2585	5890
1N2586	5890
1N2587	5870
1N2588	5872
1N2589	5874
1N2590	5876
1N2591	5878
1N2592	5880
1N2593	5882
1N2594	5886
1N2595	5886
1N2596	5890
1N2597	5890
1N2598	5870
1N2599	5872
1N2600	5874
1N2601	5876
1N2602	5878
1N2603	5880
1N2604	5882
1N2605	5886
1N2606	5886
1N2607	5890
1N2608	5890
1N2609	116
1N2610	116
1N2611	116
1N2612	116
1N2613	116
1N2614	116
1N2615	116
1N2616	125
1N2617	125
1N2618	506
1N2619	506
1N2702	5832
1N2750	5832
1N2765	5014A
1N2765A	5014A
1N2766	5023A
1N2766A	5023A
1N2767	5079A
1N2767A	5079A
1N2768	146A
1N2768A	146A
1N2772	5808
1N2773	5808
1N2774	5809
1N2775	5809
1N2776	506
1N2777	506
1N2778	506
1N2779	506
1N2783	5150A
1N2784	5916
1N2785	5920
1N2786	5944
1N2786R	5945
1N2787	5948
1N2787R	5949
1N2788	6026
1N2788R	6027
1N2789	6034
1N2789R	6035
1N2790	5073A
1N2790B	5181A
1N2793	5940
1N2794	5942
1N2795	5944
1N2796	5944
1N2797	5946
1N2798	5946
1N2799	5948
1N2800	5948
1N2801	109
1N2847	5832
1N2848	5834
1N2849	5836
1N2850	5838
1N2851	5840
1N2852	5842
1N2858	116
1N2858A	5800
1N2859	116
1N2859A	5801
1N2860	116
1N2860A	5802
1N2861	116
1N2861A	5803
1N2862	116
1N2862A	5804
1N2863	116
1N2863A	5805
1N2864	116
1N2864A	5806
1N2865	5808
1N2866	5809
1N2867	5808
1N2868	5809
1N2878	125
1N2879	125
1N2880	125
1N2881	125
1N2882	125
1N2883	125
1N2884	506
1N2885	506
1N2970	5181A
1N2970A	5181A
1N2970R	5181AK
1N2970RA	5181AK
1N2971	5182A
1N2971A	5182A
1N2971B	5182A
1N2971R	5182AK
1N2971RA	5182AK
1N2972	5183A
1N2972A	5183A
1N2972B	5183A
1N2972R	5183AK
1N2972RA	5183AK
1N2973	5185A
1N2973A	5185A
1N2973B	5185A
1N2973R	5185AK
1N2973RA	5185AK
1N2974	5186A
1N2974A	5186A
1N2974B	5186A
1N2974R	5186AK
1N2974RA	5186AK
1N2975	5187A
1N2975A	5187A
1N2975B	5187A
1N2975R	5187AK
1N2975RA	5187AK
1N2976	5188A
1N2976A	5188A
1N2976B	5188A
1N2976R	5188AK
1N2976RA	5188AK
1N2977	5189A
1N2977A	5189A
1N2977B	5189A
1N2977R	5189AK
1N2977RA	5189AK
1N2978	5190A
1N2978A	5190A
1N2978B	5190A
1N2978R	5190AK
1N2978RA	5190AK
1N2979	5191A
1N2979A	5191A
1N2979B	5191A
1N2979R	5191AK
1N2979RA	5191AK
1N2980	5192A
1N2980A	5192A
1N2980B	5192A
1N2980R	5192AK
1N2980RA	5192AK
1N2981	5193A
1N2981A	5193A
1N2981B	5193A
1N2981R	5193AK
1N2981RA	5193AK
1N2982	5194A
1N2982A	5194A
1N2982B	5194A
1N2982R	5194AK
1N2982RA	5194AK
1N2983	5195A
1N2983A	5195A
1N2983B	5195A
1N2983R	5195AK
1N2983RA	5195AK
1N2984	5196A
1N2984A	5196A
1N2984B	5196A
1N2984R	5196AK
1N2984RA	5196AK
1N2985	5197A
1N2985A	5197A
1N2985B	5197A
1N2985R	5197AK
1N2985RA	5197AK
1N2986	5198A
1N2986A	5198A
1N2986B	5198A
1N2986R	5198AK
1N2986RA	5198AK
1N2987	5199A
1N2987A	5199A
1N2987B	5199A
1N2987R	5199AK
1N2987RA	5199AK
1N2988	5200A
1N2988A	5200A
1N2988B	5200A
1N2988R	5200AK
1N2988RA	5200AK
1N2989	5202A
1N2989A	5202A
1N2989B	5202A
1N2989R	5202AK
1N2989RA	5202AK
1N2990	5203A
1N2990A	5203A
1N2990B	5203A
1N2990R	5203AK
1N2990RA	5203AK
1N2991	5204A
1N2991A	5204A
1N2991B	5204A
1N2991R	5204AK
1N2991RA	5204AK
1N2992	5205A
1N2992A	5205A
1N2992B	5205A
1N2992R	5205AK
1N2992RA	5205AK
1N2993	5206A
1N2993A	5206A
1N2993B	5206A
1N2993R	5206AK
1N2993RA	5206AK
1N2994	5207A
1N2994A	5207A
1N2994B	5207A
1N2994R	5207AK
1N2994RA	5207AK
1N2995	5208A
1N2995A	5208A
1N2995B	5208A
1N2995R	5208AK
1N2995RA	5208AK
1N2996	5209A
1N2996A	5209A
1N2996B	5209A
1N2996R	5209AK
1N2996RA	5209AK
1N2997	5210A
1N2997A	5210A
1N2997B	5210A
1N2997R	5210AK
1N2997RA	5210AK
1N2998	5211A
1N2998A	5211A
1N2998R	5211AK
1N2998RA	5211AK
1N2999	5212A
1N2999A	5212A
1N2999B	5212A
1N2999R	5212AK
1N2999RA	5212AK
1N3000	5214A
1N3000A	5214A
1N3000B	5214A
1N3000R	5214AK
1N3000RA	5214AK
1N3001	5215A
1N3001A	5215A
1N3001B	5215A
1N3001R	5215AK
1N3001RA	5215AK
1N3002	5216A
1N3002A	5216A
1N3002B	5216A
1N3002R	5216AK
1N3002RA	5216AK
1N3003	5217A
1N3003A	5217A
1N3003B	5217A
1N3003R	5217AK
1N3003RA	5217AK
1N3004	5219A
1N3004A	5219A
1N3004B	5219A
1N3004R	5219AK
1N3004RA	5219AK
1N3005	5220A
1N3005A	5220A
1N3005B	5220A
1N3005R	5220AK
1N3005RA	5220AK
1N3006	5221A
1N3006A	5221A
1N3006B	5221A
1N3006R	5221AK
1N3006RA	5221AK
1N3007	5222A
1N3007A	5222A
1N3007B	5222A
1N3007R	5222AK
1N3007RA	5222AK
1N3008	5223A
1N3008A	5223A
1N3008B	5223A
1N3008R	5223AK
1N3008RA	5223AK
1N3009	5224A
1N3009A	5224A
1N3009B	5224A
1N3009R	5224AK
1N3009RA	5224AK
1N3010	5225A
1N3010A	5225A
1N3010B	5225A
1N3010R	5225AK
1N3010RA	5225AK
1N3011	5226A
1N3011A	5226A
1N3011B	5226A
1N3011R	5226AK
1N3011RA	5226AK
1N3012	5227A
1N3012B	5227A
1N3012R	5227AK
1N3012RA	5227AK
1N3013	5229A
1N3013A	5229A
1N3013B	5229A
1N3013R	5229AK
1N3013RA	5229AK
1N3014	5230A
1N3014A	5230A
1N3014R	5230AK
1N3014RA	5230AK
1N3015	5232A
1N3015A	5232A
1N3015B	5232A
1N3015R	5232AK
1N3015RA	5232AK
1N3016	5071A
1N3016A	5071A
1N3016B	5071A
1N3017	138A
1N3017A	138A
1N3017B	138A
1N3018	5072A
1N3018A	5072A
1N3018B	5072A
1N3019A	139A
1N3019B	139A
1N3020	140A
1N3020A	140A
1N3020B	140A
1N3021	5074A
1N3021A	5074A
1N3021B	5074A
1N3022	142A
1N3022A	142A
1N3022B	142A
1N3023	143A
1N3023A	143A
1N3023B	143A
1N3024	145A
1N3024A	145A
1N3024B	145A
1N3025	5075A
1N3025A	5075A
1N3025B	5075A
1N3026	5077A
1N3026A	5077A
1N3026B	5077A
1N3027	5079A
1N3027A	5079A
1N3027B	5079A
1N3028	5080A
1N3028A	5080A
1N3028B	5080A
1N3029	5081A
1N3029A	5081A
1N3029B	5081A
1N3030	146A
1N3030A	146A
1N3030B	146A
1N3031	5084A
1N3031A	5084A
1N3031B	5084A
1N3032	147A
1N3032A	147A
1N3032B	147A
1N3033	5085A
1N3033A	5085A
1N3033B	5085A
1N3034	5086A
1N3034A	5086A
1N3034B	5086A
1N3035	5087A
1N3035A	5087A
1N3035B	5087A
1N3036	5088A
1N3036A	5088A
1N3036B	5088A
1N3037	5089A
1N3037A	5089A
1N3037B	5089A
1N3038	5090A
1N3038A	5090A
1N3038B	5090A
1N3039	149A
1N3039A	149A
1N3039B	149A
1N3040	5092A
1N3040A	5092A
1N3040B	5092A
1N3041	5093A
1N3041A	5093A
1N3041B	5093A
1N3042	150A
1N3042A	150A
1N3042B	150A
1N3043	5095A
1N3043A	5095A
1N3043B	5095A
1N3044	5096A
1N3044A	5096A
1N3044B	5096A
1N3045	151A
1N3045A	151A
1N3045B	151A
1N3046	5097A
1N3046A	5097A
1N3046B	5097A
1N3047	5098A
1N3047A	5098A
1N3047B	5098A
1N3048	5100A
1N3048A	5100A
1N3048B	5100A
1N3049	5101A
1N3049A	5101A

To Be Replaced	ECG Replacement
1N3049B	5101A
1N3050	5103A
1N3050A	5103A
1N3050B	5103A
1N3051	5105A
1N3051A	5105A
1N3051B	5105A
1N3062	519
1N3063	177
1N3064	177
1N3065	177
1N3066	177
1N3067	177
1N3068	177
1N3069	177
1N3069M	177
1N3070	177
1N3071	177
1N3072	5800
1N3073	5801
1N3074	5802
1N3075	5802
1N3076	5803
1N3077	5803
1N3078	5804
1N3079	5804
1N3080	5808
1N3081	5806
1N3082	5802
1N3082B	5143A
1N3083	5804
1N3084	5806
1N3094	116
1N3098	5097A
1N3098A	5097A
1N3099	5100A
1N3100	5103A
1N3100A	5103A
1N3102	5223A
1N3102A	5223A
1N3103	5226A
1N3103A	5226A
1N3104	5230A
1N3106	5806
1N3107	5809
1N3109	5848
1N3110	109
1N3112	128
1N3121	109
1N3122	109
1N3123	177
1N3124	177
1N3125	109
1N3139	6050
1N3142	6026
1N3146	109
1N3147	177
1N3148	5017A
1N3160	116
1N3161	6354
1N3162	6354
1N3163	6354
1N3164	6354
1N3165	6354
1N3166	6354
1N3167	6354
1N3168	6354
1N3169	6356
1N3170	6356
1N3171	6358
1N3172	6358
1N3173	6358
1N3181	138A
1N3182	614
1N3189	116
1N3190	116
1N3191	116
1N3193	116
1N3194	116
1N3195	116
1N3196	125
1N3197	177
1N3199	5016A
1N3203	116
1N3204	109
1N3206	177
1N3207	177
1N3208	5940
1N3208R	5941
1N3209	5942
1N3209R	5943
1N3210	5944
1N3210R	5945
1N3211	5946
1N3211R	5947
1N3212	5948
1N3212R	5949
1N3213	5950
1N3213R	5951
1N3214	5952
1N3214R	5953
1N3221	125
1N3223	177
1N3227	5801
1N3228	5802
1N3229	5805
1N3230	5806
1N3231	5808
1N3232	5809
1N3233	506
1N3237	5800
1N3238	5801
1N3239	5802
1N3240	5804
1N3241	5806

To Be Replaced	ECG Replacement
1N3242	5808
1N3243	5809
1N3244	506
1N3246	5800
1N3247	5801
1N3248	5802
1N3249	5804
1N3250	5806
1N3251	5808
1N3252	5809
1N3253	116
1N3254	116
1N3255	116
1N3256	125
1N3257	177
1N3258	177
1N3260	6354
1N3261	6354
1N3262	6354
1N3263	6354
1N3264	6354
1N3265	6354
1N3266	6354
1N3267	6354
1N3268	6356
1N3269	6356
1N3270	6358
1N3270R	6359
1N3271	6358
1N3271R	6359
1N3272	6358
1N3272R	6359
1N3273	6358
1N3273R	6359
1N3277	116
1N3278	116
1N3279	116
1N3280	125
1N3281	125
1N3282	125
1N3283	525
1N3287	109
1N3287N	109
1N3287W	109
1N3288	6154
1N3289	6154
1N3289R	6155
1N3290	6154
1N3290R	6155
1N3291	6154
1N3291R	6155
1N3292	6156
1N3292A	6156
1N3292AR	6157
1N3292R	6157
1N3293	6156
1N3293R	6157
1N3294	6158
1N3294R	6159
1N3295R	6159
1N3298	116
1N3300	6406
1N3300A	6406
1N3301	6407
1N3301A	6407
1N3302	6408
1N3302A	6408
1N3303A	6408
1N3305	5247A
1N3305A	5247A
1N3305R	5247AK
1N3305RA	5247AK
1N3306	5248A
1N3306A	5248A
1N3306R	5248AK
1N3306RA	5248AK
1N3307	5249A
1N3307A	5249A
1N3307R	5249A
1N3307RA	5249A
1N3308	5251A
1N3308A	5251A
1N3308R	5251AK
1N3308RA	5251AK
1N3309	5252A
1N3309A	5252A
1N3309R	5252AK
1N3309RA	5252AK
1N3310	5253A
1N3310A	5253A
1N3310R	5253AK
1N3310RA	5253AK
1N3311	5254A
1N3311A	5254A
1N3311R	5254AK
1N3311RA	5254AK
1N3312	5255A
1N3312A	5255A
1N3312R	5255AK
1N3312RA	5255AK
1N3313	5256A
1N3313A	5256A
1N3313R	5256AK
1N3313RA	5256AK
1N3314	5257A
1N3314A	5257A
1N3314R	5257AK
1N3314RA	5257AK
1N3315	5258A
1N3315A	5258A
1N3315R	5258AK
1N3315RA	5258AK
1N3316	5259A
1N3316A	5259A
1N3316R	5259AK

To Be Replaced	ECG Replacement
1N3316RA	5259AK
1N3317	5260A
1N3317A	5260A
1N3317R	5260AK
1N3317RA	5260AK
1N3318	5261A
1N3318A	5261A
1N3318R	5261AK
1N3318RA	5261AK
1N3319A	5262A
1N3319R	5262AK
1N3319RA	5262AK
1N3320	5263A
1N3320A	5263A
1N3320R	5263AK
1N3320RA	5263AK
1N3321	5264A
1N3321A	5264A
1N3321R	5264AK
1N3321RA	5264AK
1N3322	5265A
1N3322A	5265A
1N3322R	5265AK
1N3322RA	5265AK
1N3323	5266A
1N3323A	5266A
1N3323R	5266AK
1N3323RA	5266AK
1N3324	5268A
1N3324A	5268A
1N3324R	5268AK
1N3324RA	5268AK
1N3325	5269A
1N3325A	5269A
1N3325R	5296AK
1N3325RA	5296AK
1N3326	5270A
1N3326A	5270A
1N3326R	5270AK
1N3326RA	5270AK
1N3327	5271A
1N3327A	5271A
1N3327R	5271AK
1N3327RA	5271AK
1N3328	5272A
1N3328A	5272A
1N3328R	5272AK
1N3328RA	5272AK
1N3329	5273A
1N3329A	5273A
1N3329R	5273AK
1N3329RA	5273AK
1N3330	5274A
1N3330A	5274A
1N3330R	5274AK
1N3330RA	5274AK
1N3331	5275A
1N3331A	5275A
1N3331R	5275AK
1N3331RA	5275AK
1N3332	5276A
1N3332A	5276A
1N3332R	5276AK
1N3332RA	5276AK
1N3333	5277A
1N3333A	5277A
1N3333R	5277AK
1N3333RA	5277AK
1N3334	5278A
1N3334A	5278A
1N3334R	5278AK
1N3334RA	5278AK
1N3335	5280A
1N3335A	5280A
1N3335R	5280AK
1N3335RA	5280AK
1N3336	5281A
1N3336A	5281A
1N3336R	5281AK
1N3336RA	5281AK
1N3337	5282A
1N3337A	5282A
1N3337R	5282AK
1N3337RA	5282AK
1N3338	5283A
1N3338A	5283A
1N3338R	5283AK
1N3338RA	5283AK
1N3339	5284A
1N3339A	5284A
1N3339R	5284AK
1N3339RA	5284AK
1N3340	5285A
1N3340A	5285A
1N3340R	5285AK
1N3340RA	5285AK
1N3341	5286A
1N3341A	5286A
1N3341R	5286AK
1N3341RA	5286AK
1N3342	5287A
1N3342A	5287A
1N3342R	5287AK
1N3342RA	5287AK
1N3343	5288A
1N3343A	5288A
1N3343R	5288AK
1N3343RA	5288AK
1N3344	5289A
1N3344A	5289A
1N3344R	5289AK
1N3344RA	5289AK
1N3345	5290A
1N3345A	5290A
1N3345R	5290AK

To Be Replaced	ECG Replacement
1N3345RA	5290AK
1N3346	5291A
1N3346A	5291A
1N3346R	5291AK
1N3346RA	5291AK
1N3347	5292A
1N3347A	5292A
1N3347R	5292AK
1N3347RA	5292AK
1N3348	5293A
1N3348A	5293A
1N3348R	5293AK
1N3348RA	5293AK
1N3349	5294A
1N3349A	5294A
1N3349R	5294AK
1N3349RA	5294AK
1N3350	5296A
1N3350A	5296A
1N3350R	5296AK
1N3350RA	5296AK
1N3396	5005A
1N3400	5014A
1N3401	5016A
1N3402	5019A
1N3403	5021A
1N3404	5024A
1N3405	5027A
1N3406	5030A
1N3407	5033A
1N3408	5036A
1N3409	5038A
1N3410	5040A
1N3411	5013A
1N3412	5014A
1N3413	5015A
1N3414	5016A
1N3415	5019A
1N3416	5021A
1N3417	5024A
1N3418	5027A
1N3419	5030A
1N3420	5033A
1N3421	5035A
1N3422	5036A
1N3423	5038A
1N3424	5040A
1N3425	5042A
1N3426	5045A
1N3427	5047A
1N3428	5050A
1N3429	5052A
1N3430	5055A
1N3431	5058A
1N3433	5072A
1N3434	140A
1N3435	142A
1N3436	145A
1N3437	5077A
1N3438	5080A
1N3439	146A
1N3440	147A
1N3441	5086A
1N3442	5088A
1N3443	137A
1N3444	5071A
1N3445	5072A
1N3446	140A
1N3447	142A
1N3448	145A
1N3449	5077A
1N3450	5080A
1N3451	146A
1N3452	5084A
1N3453	147A
1N3454	5086A
1N3455	5088A
1N3456	5090A
1N3457	5092A
1N3458	150A
1N3459	5096A
1N3460	5097A
1N3461	5100A
1N3462	5103A
1N3465	109
1N3466	109
1N3467	109
1N3468	109
1N3469	109
1N3470	109
1N3471	177
1N3483	109
1N3484	109
1N3486	5801
1N3487	506
1N3496	137A
1N3497	137A
1N3498	137A
1N3499	137A
1N3500	137A
1N3506	5066A
1N3507	134A
1N3508	5067A
1N3509	5068A
1N3510	5069A
1N3511	135A
1N3512	136A
1N3513	137A
1N3514	5071A
1N3515	138A
1N3516	5072A
1N3517	139A
1N3518	140A
1N3519	5074A
1N3520	142A

To Be Replaced	ECG Replacement
1N3521	143A
1N3522	145A
1N3523	5075A
1N3524	5077A
1N3525	5079A
1N3526	5080A
1N3527	5081A
1N3528	146A
1N3529	5084A
1N3530	147A
1N3531	5085A
1N3532	5086A
1N3533	5087A
1N3534	5088A
1N3537	142A
1N3544	116
1N3545	116
1N3546	116
1N3547	116
1N3548	5805
1N3549	116
1N3550	177
1N3553	5013A
1N3554	612
1N3563	5809
1N3564	109
1N3565	5830
1N3569	5852
1N3570	5854
1N3571	5856
1N3572	5858
1N3573	5860
1N3574	5862
1N3575	177
1N3576	177
1N3577	177
1N3580	141A
1N3580A	141A
1N3580B	141A
1N3581	141A
1N3581A	141A
1N3581B	141A
1N3582	141A
1N3582A	141A
1N3582B	141A
1N3584	141A
1N3584A	141A
1N3584B	141A
1N3592	109
1N3593	177
1N3594	177
1N3595	177
1N3598	177
1N3599	177
1N3600	519
1N3601	177
1N3602	177
1N3603	177
1N3604	177
1N3605	177
1N3606	177
1N3607	177
1N3608	177
1N3609	177
1N3610	5896
1N3611	116
1N3612	116
1N3613	116
1N3614	125
1N3615	5892
1N3615R	5893
1N3616	5894
1N3616R	5895
1N3617	5896
1N3617R	5897
1N3618R	5897
1N3619	5899
1N3619R	5900
1N3620	5900
1N3620R	5901
1N3621	5902
1N3621R	5903
1N3622	5904
1N3622R	5905
1N3623	5908
1N3623R	5909
1N3624	5910
1N3624R	5911
1N3625	177
1N3639	116
1N3640	116
1N3641	116
1N3642	125
1N3649	5866
1N3649R	5868
1N3649(Rev. Pol.)	5867
1N3650	5868
1N3653	177
1N3654	177
1N3656	5802
1N3657	5804
1N3658	5806
1N3666	177
1N3668	177
1N3669	116
1N3670	5886
1N3670A	5886
1N3670R	5887
1N3671	5886
1N3671A	5886
1N3671AR	5887
1N3671R	5887
1N3672	5890
1N3672A	5890
1N3672AR	5891

To Be Replaced	ECG Replacement
1N3672R	5891
1N3673	5890
1N3673A	5890
1N3673AR	5891
1N3673R	5891
1N3675	5071A
1N3675A	5071A
1N3675B	5071A
1N3676	138A
1N3676A	138A
1N3676B	138A
1N3677	5072A
1N3677A	5072A
1N3677B	5072A
1N3678	139A
1N3678A	139A
1N3678B	139A
1N3679	140A
1N3679A	140A
1N3679B	140A
1N3680	5074A
1N3680A	5074A
1N3680B	5074A
1N3681	142A
1N3681A	142A
1N3681B	142A
1N3682	143A
1N3682A	143A
1N3682B	143A
1N3683	145A
1N3683A	145A
1N3683B	145A
1N3684	5075A
1N3684A	5075A
1N3684B	5075A
1N3685	5077A
1N3685A	5077A
1N3685B	5077A
1N3686	5079A
1N3686A	5079A
1N3686B	5079A
1N3687	5080A
1N3687A	5080A
1N3687B	5080A
1N3688	5081A
1N3688A	5081A
1N3688B	5081A
1N3689	146A
1N3689A	146A
1N3689B	146A
1N3690	5084A
1N3690A	5084A
1N3690B	5084A
1N3691	147A
1N3691A	147A
1N3691B	147A
1N3692	5085A
1N3692A	5085A
1N3692B	5085A
1N3693	5086A
1N3693A	5086A
1N3693B	5086A
1N3694	5087A
1N3694A	5087A
1N3694B	5087A
1N3695	5088A
1N3695A	5088A
1N3695B	5088A
1N3696	5089A
1N3696A	5089A
1N3696B	5089A
1N3697	5090A
1N3697A	5090A
1N3697B	5090A
1N3698	149A
1N3698A	149A
1N3698B	149A
1N3699	5092A
1N3699A	5092A
1N3699B	5092A
1N3700	5093A
1N3700A	5093A
1N3700B	5093A
1N3701	150A
1N3701A	150A
1N3701B	150A
1N3702	5095A
1N3702A	5095A
1N3702B	5095A
1N3703	5096A
1N3703A	5096A
1N3703B	5096A
1N3704	151A
1N3704A	151A
1N3704B	151A
1N3705	5097A
1N3705A	5097A
1N3705B	5097A
1N3706	5098A
1N3706A	5098A
1N3706B	5098A
1N3707	5100A
1N3707A	5100A
1N3707B	5100A
1N3708	5101A
1N3708A	5101A
1N3708B	5101A
1N3709	5103A
1N3709A	5103A
1N3709B	5103A
1N3710	5105A
1N3710A	5105A
1N3710B	5105A
1N3722	177
1N3723	5809

To Be Replaced	ECG Replacement
1N3724	506
1N3725	506
1N3729	506
1N3731	506
1N3732	5116A
1N3735	6354
1N3735R	6355
1N3736	6354
1N3736R	6355
1N3738	6354
1N3738R	6355
1N3739	6356
1N3739R	6357
1N3740	6356
1N3740R	6357
1N3741	6358
1N3741R	6359
1N3742	6358
1N3742R	6359
1N3748	5802
1N3749	5804
1N3750	5806
1N3751	5808
1N3752	5809
1N3753	109
1N3754	5801
1N3755	5802
1N3756	5804
1N3757	5802
1N3758	5804
1N3759	5806
1N3760	5808
1N3761	5809
1N3763	5135A
1N3765	5998
1N3765R	5999
1N3766	5998
1N3766R	5999
1N3767	6002
1N3767R	6003
1N3768	6002
1N3768R	6003
1N3773	109
1N3776	140A
1N3777	5998
1N3785	5120A
1N3785A	5120A
1N3785B	5120A
1N3786	5121A
1N3786A	5121A
1N3786B	5121A
1N3787	5122A
1N3787A	5122A
1N3787B	5122A
1N3788	5124A
1N3788A	5124A
1N3788B	5124A
1N3789	5125A
1N3789A	5125A
1N3789B	5125A
1N3790	5126A
1N3790A	5126A
1N3790B	5126A
1N3791	5127A
1N3791A	5127A
1N3791B	5127A
1N3792	5128A
1N3792A	5128A
1N3792B	5128A
1N3793	5130A
1N3793A	5130A
1N3793B	5130A
1N3794	5131A
1N3794A	5131A
1N3794B	5131A
1N3795	5133A
1N3795A	5133A
1N3795B	5133A
1N3796	5135A
1N3796A	5135A
1N3796B	5135A
1N3797	5136A
1N3797A	5136A
1N3797B	5136A
1N3798	5137A
1N3798A	5137A
1N3798B	5137A
1N3799	5139A
1N3799A	5139A
1N3799B	5139A
1N3800	5141A
1N3800A	5141A
1N3800B	5141A
1N3801	5142A
1N3801A	5142A
1N3801B	5142A
1N3802	5143A
1N3802A	5143A
1N3803	5144A
1N3803A	5144A
1N3803B	5144A
1N3804	5145A
1N3804A	5145A
1N3804B	5145A
1N3805	5146A
1N3805A	5146A
1N3805B	5146A
1N3806	5147A
1N3806A	5147A
1N3806B	5147A
1N3807	5148A
1N3807A	5148A
1N3807B	5148A
1N3808	5150A
1N3808A	5150A

To Be Replaced	ECG Replacement
1N3808B	5150A
1N3809	5151A
1N3809A	5151A
1N3809B	5151A
1N3810	5152A
1N3810A	5152A
1N3810B	5152A
1N3811	5153A
1N3811A	5153A
1N3812	5155A
1N3812A	5155A
1N3812B	5155A
1N3813	5156A
1N3813A	5156A
1N3813B	5156A
1N3814	5157A
1N3814A	5157A
1N3814B	5157A
1N3815	5158A
1N3815A	5158A
1N3815B	5158A
1N3816	5159A
1N3816A	5159A
1N3816B	5159A
1N3817	5161A
1N3817A	5161A
1N3817B	5161A
1N3818	5162A
1N3818A	5162A
1N3818B	5162A
1N3819	5164A
1N3819A	5164A
1N3819B	5164A
1N3820	5166A
1N3820A	5166A
1N3820B	5166A
1N3821	5066A
1N3821A	5066A
1N3822	134A
1N3822A	134A
1N3823	5067A
1N3823A	5067A
1N3824	5068A
1N3824A	5068A
1N3825	5069A
1N3825A	5069A
1N3826	135A
1N3826A	5116A
1N3827	136A
1N3827A	136A
1N3828	137A
1N3828A	137A
1N3829	5071A
1N3829A	5071A
1N3830	138A
1N3830A	138A
1N3855A	139A
1N3864	177
1N3866	5802
1N3867	5804
1N3868	5806
1N3869	5809
1N3872	177
1N3873	177
1N3874	507
1N3879	507
1N3895	116
1N3914	507
1N3915	506
1N3919	5868
1N3924	5890
1N3929	125
1N3938	5802
1N3939	5804
1N3940	5806
1N3941	5808
1N3942	5809
1N3947	137A
1N3948	137A
1N3949	5196A
1N3950	5135A
1N3951	5138A
1N3952	5802
1N3953	177
1N3954	177
1N3956	177
1N3957	5809
1N3964	5916
1N3965	5920
1N3966	5924
1N3966R	5925
1N3967	5928
1N3968	6026
1N3968R	6027
1N3969	6034
1N3969R	6035
1N3970	6040
1N3970R	6041
1N3971	6042
1N3971R	6043
1N3972	6154
1N3973	6154
1N3974	6156
1N3975	6158
1N3976	6354
1N3977	6354
1N3978	6356
1N3981	5802
1N3982	5804
1N3983	5806
1N3984	5178A
1N3985	5179A
1N3986	5180A
1N3987	5866
1N3987R	5867

To Be Replaced	ECG Replacement
1N3988	5866
1N3988R	5867
1N3989	5868
1N3989R	5869
1N3990	5868
1N3990R	5868
1N3991	109
1N3993	5174AK
1N3993A	5174AK
1N3994	5175AK
1N3994A	5175AK
1N3995	5176AK
1N3995A	5176AK
1N3996	5177AK
1N3996A	5177AK
1N3997	5178AK
1N3997A	5178AK
1N3998	5180AK
1N3998A	5180AK
1N3999	5181AK
1N3999A	5181AK
1N4000	5182AK
1N4000A	5182AK
1N4001	116
1N-4002	116
1N4002	116
1N4003	116
1N4003GP	116
1N4004	116
1N4004GP	116
1N4005	116
1N4006	125
1N4007	125
1N4009	177
1N4010	137A
1N4011	125
1N4012	5886
1N4012R	5887
1N4013	5886
1N4013R	5887
1N4014	5890
1N4014R	5891
1N4015	5890
1N4015R	5891
1N4016	5183A
1N4016A	5183A
1N4016B	5183A
1N4017	5185A
1N4017A	5185A
1N4017B	5185A
1N4018	5186A
1N4018A	5186A
1N4018B	5186A
1N4019	5187A
1N4019A	5187A
1N4019B	5187A
1N4020	5188A
1N4020A	5188A
1N4020B	5188A
1N4021	5189A
1N4021A	5189A
1N4021B	5189A
1N4022	5191A
1N4022A	5191A
1N4022B	5191A
1N4023	5192A
1N4023A	5192A
1N4023B	5192A
1N4024	5194A
1N4024A	5194A
1N4024B	5194A
1N4025	5196A
1N4025A	5196A
1N4025B	5196A
1N4026	5197A
1N4026A	5197A
1N4026B	5197A
1N4027	5198A
1N4027A	5198A
1N4027B	5198A
1N4028	5200A
1N4028A	5200A
1N4028B	5200A
1N4029	5202A
1N4029A	5202A
1N4030	5203A
1N4030A	5203A
1N4030B	5203A
1N4031	5204A
1N4031A	5204A
1N4031B	5204A
1N4032	5205A
1N4032A	5205A
1N4032B	5205A
1N4033	5206A
1N4033A	5206A
1N4034	5208A
1N4034A	5208A
1N4034B	5208A
1N4035	5210A
1N4035A	5210A
1N4035B	5210A
1N4036	5212A
1N4036A	5212A
1N4036B	5212A
1N4037	5214A
1N4037A	5214A
1N4037B	5214A
1N4038	5215A
1N4038A	5215A
1N4039	5216A
1N4039A	5216A
1N4039B	5216A
1N4040	5217A
1N4040A	5217A

To Be Replaced	ECG Replacement
1N4041	5219A
1N4041A	5219A
1N4042	5220A
1N4042A	5220A
1N4042B	5220A
1N4043	177
1N4044	6354
1N4044R	6355
1N4045	6354
1N4045R	6355
1N4046	6354
1N4046R	6355
1N4047	6354
1N4047R	6355
1N4048	6354
1N4048R	6355
1N4049	6354
1N4049R	6355
1N4050	6354
1N4050R	6355
1N4051R	6357
1N4052	6356
1N4052R	6357
1N4053	6358
1N4053R	6359
1N4054	6358
1N4054R	6359
1N4055	6358
1N4055R	6359
1N4056	6358
1N4056R	6359
1N4057	5127A
1N4057A	5127A
1N4058	5130A
1N4058A	5130A
1N4059	5132A
1N4059A	5132A
1N4060	5134A
1N4060A	5134A
1N4061	5135A
1N4061A	5135A
1N4062	5136A
1N4062A	5136A
1N4063	5139A
1N4063A	5139A
1N4064	5141A
1N4064A	5141A
1N4065	5142A
1N4065A	5142A
1N4067	5145A
1N4067A	5145A
1N4068	5146A
1N4068A	5146A
1N4069	5147A
1N4069A	5147A
1N4070	5148A
1N4070A	5148A
1N4071	5150A
1N4071A	5150A
1N4072	5151A
1N4072A	5151A
1N4073	5152A
1N4073A	5152A
1N4075	5154A
1N4075A	5154A
1N4076	5155A
1N4076A	5155A
1N4077	5156A
1N4077A	5156A
1N4079	5157A
1N4079A	5157A
1N4080	5158A
1N4080A	5158A
1N4081	5159A
1N4081A	5159A
1N4082	5160A
1N4082A	5160A
1N4083	5161A
1N4083A	5161A
1N4085	5166A
1N4085A	5166A
1N4087	177
1N4088	109
1N4089	5804
1N4092	178
1N4093	178MP
1N4095	5019A
1N4096	5155A
1N4097	5156A
1N4098	5161A
1N4099	5071A
1N4100	138A
1N4101	5072A
1N4102	5073A
1N4103	139A
1N4103A	139A
1N4104	140A
1N4105	5074A
1N4106	142A
1N4106A	142A
1N4107	143A
1N4108	144A
1N4109	145A
1N4110	5075A
1N4111	5076A
1N4112	5077A
1N4113	5078A
1N4114	5079A
1N4115	5080A
1N4116	5081A
1N4117	5032A
1N4118	146A
1N4119	5083A
1N4120	5084A
1N4121	147A

To Be Replaced	ECG Replacement
1N4121A	147A
1N4121B	147A
1N4122	5085A
1N4123	5086A
1N4124	5087A
1N4125	5088A
1N4126	5089A
1N4127	5090A
1N4128	5091A
1N4129	149A
1N4130	5092A
1N4131	5093A
1N4132	150A
1N4133	5094A
1N4134	5095A
1N4135	5096A
1N4136	6054
1N4137	6060
1N4138	6064
1N4139	5800
1N4140	5801
1N4141	5802
1N4142	5804
1N4143	5806
1N4144	5808
1N4145	5809
1N4146	506
1N4147	177
1N4148	519
1N4149	519
1N4150	177
1N4151	177
1N4152	177
1N4153	519
1N4154	519
1N4155	506
1N4156	177
1N4157	177
1N4158	5071A
1N4158A	5071A
1N4158B	5071A
1N4159	138A
1N4159A	138A
1N4159B	138A
1N4160	5072A
1N4160A	5072A
1N4160B	5072A
1N4161	139A
1N4161A	139A
1N4161B	139A
1N4162	140A
1N4162A	140A
1N4162B	140A
1N4163	5074A
1N4163A	5074A
1N4163B	5074A
1N4164	142A
1N4164A	142A
1N4164B	142A
1N4165	143A
1N4165A	143A
1N4165B	143A
1N4166	145A
1N4166A	145A
1N4166B	145A
1N4167	5075A
1N4167A	5075A
1N4167B	5075A
1N4168	5077A
1N4168A	5077A
1N4168B	5077A
1N4169	5079A
1N4169A	5079A
1N4169B	5079A
1N4170	5080A
1N4170A	5080A
1N4170B	5080A
1N4171	5081A
1N4171A	5081A
1N4171B	5081A
1N4172	146A
1N4172A	146A
1N4172B	146A
1N4173	5084A
1N4173A	5084A
1N4173B	5084A
1N4174	147A
1N4174A	147A
1N4174B	147A
1N4175	5085A
1N4175A	5085A
1N4175B	5085A
1N4176	5086A
1N4176A	5086A
1N4176B	5086A
1N4177	5087A
1N4177A	5087A
1N4177B	5087A
1N4178	5088A
1N4178A	5088A
1N4178B	5088A
1N4179A	5089A
1N4179B	5089A
1N4180	5090A
1N4180A	5090A
1N4180B	5090A
1N4181	149A
1N4181A	149A
1N4181B	149A
1N4182	5092A
1N4182A	5092A
1N4182B	5092A
1N4183	5093A
1N4183A	5093A
1N4183B	5093A

To Be Replaced	ECG Replacement
1N4184	150A
1N4184A	150A
1N4184B	150A
1N4185	5095A
1N4185A	5095A
1N4185B	5095A
1N4186	5096A
1N4186A	5096A
1N4186B	5096A
1N4187	151A
1N4187A	151A
1N4187B	151A
1N4188	5097A
1N4188A	5097A
1N4188B	5097A
1N4189	5098A
1N4189A	5098A
1N4189B	5098A
1N4190	5100A
1N4190A	5100A
1N4190B	5100A
1N4191	5101A
1N4191A	5101A
1N4191B	5101A
1N4192	5103A
1N4192A	5103A
1N4192B	5103A
1N4193	5105A
1N4193A	5105A
1N4193B	5105A
1N4194	5181A
1N4194A	5181A
1N4195	5182A
1N4195A	5182A
1N4196	5183A
1N4196A	5183A
1N4197	5185A
1N4197A	5185A
1N4198	5186A
1N4198A	5186A
1N4199	5187A
1N4199A	5187A
1N4200	5188A
1N4200A	5188A
1N4201	5189A
1N4201A	5189A
1N4202	5190A
1N4202A	5190A
1N4203	5191A
1N4203A	5191A
1N4204	5192A
1N4204A	5192A
1N4205	5193A
1N4205A	5193A
1N4206	5194A
1N4206A	5194A
1N4207	5195A
1N4207A	5195A
1N4208	5196A
1N4208A	5196A
1N4209	5197A
1N4209A	5197A
1N4210	5198A
1N4210A	5198A
1N4211	5199A
1N4211A	5199A
1N4212	5200A
1N4212A	5200A
1N4213	5202A
1N4213A	5202A
1N4214	5203A
1N4214A	5203A
1N4215	5204A
1N4215A	5204A
1N4216	5205A
1N4216A	5205A
1N4217	5206A
1N4217A	5206A
1N4218	5207A
1N4218A	5207A
1N4219	5208A
1N4219A	5208A
1N4220	5209A
1N4220A	5209A
1N4221	5210A
1N4221A	5210A
1N4222	5211A
1N4222A	5211A
1N4223	5212A
1N4223A	5212A
1N4224	5214A
1N4224A	5214A
1N4225	5215A
1N4225A	5215A
1N4226	5216A
1N4226A	5216A
1N4227	5217A
1N4227A	5217A
1N4228	5219A
1N4228A	5219A
1N4229	5220A
1N4229A	5220A
1N4230	5221A
1N4230A	5221A
1N4231	5222A
1N4231A	5222A
1N4232	5223A
1N4232A	5223A
1N4233	5224A
1N4233A	5224A
1N4234	5225A
1N4234A	5225A
1N4235	5226A
1N4235A	5226A
1N4236	5227A

To Be Replaced	ECG Replacement
1N4236A	5227A
1N4237	5229A
1N4237A	5229A
1N4238	5230A
1N4238A	5230A
1N4239	5232A
1N4239A	5232A
1N4240	5177A
1N4241	5179A
1N4242	177
1N4243	177
1N4245	116
1N4246	116
1N4247	116
1N4248	125
1N4249	125
1N4250	125
1N4251	125
1N4252	506
1N4258	5181A
1N4258A	5181A
1N4259	5182A
1N4259A	5182A
1N4260	5183A
1N4260A	5183A
1N4261	5185A
1N4261A	5185A
1N4262	5186A
1N4262A	5186A
1N4263	5187A
1N4263A	5187A
1N4263B	5187A
1N4264	5188A
1N4264A	5188A
1N4265	5189A
1N4265A	5189A
1N4266	5191A
1N4266A	5191A
1N4267	5192A
1N4267A	5192A
1N4268	5194A
1N4268A	5194A
1N4269	5196A
1N4269A	5196A
1N4270	5197A
1N4270A	5197A
1N4271	5198A
1N4271A	5198A
1N4272	5200A
1N4272A	5200A
1N4273	5202A
1N4273A	5202A
1N4274	5203A
1N4274A	5203A
1N4275	5204A
1N4275A	5204A
1N4276	5205A
1N4276A	5205A
1N4277	5206A
1N4277A	5206A
1N4278	5208A
1N4278A	5208A
1N4279	5210A
1N4279A	5210A
1N4280	5212A
1N4280A	5212A
1N4281	5214A
1N4281A	5214A
1N4282	5215A
1N4282A	5215A
1N4283	5216A
1N4283A	5216A
1N4284	5217A
1N4284A	5217A
1N4285	5219A
1N4285A	5219A
1N4286	5220A
1N4286A	5220A
1N4287	5222A
1N4287A	5222A
1N4288	5223A
1N4288A	5223A
1N4288B	5223A
1N4289	5224A
1N4289A	5224A
1N4290	5226A
1N4290A	5226A
1N4291	5227A
1N4291A	5227A
1N4292	5230A
1N4292A	5230A
1N4293	5232A
1N4293A	5232A
1N4293B	5232A
1N4295	140A
1N4295A	140A
1N4296	140A
1N4296A	140A
1N4297	5073A
1N4297A	5073A
1N4298	5073A
1N4298A	5073A
1N4299	5074A
1N4299A	5074A
1N4299B	141A
1N4300	5074A
1N4300A	5074A
1N4300B	141A
1N4301	5074A
1N4301A	5074A
1N4302	5073A
1N4302A	5073A
1N4303	5074A
1N4303A	5074A
1N4303B	141A

To Be Replaced	ECG Replacement
1N4304	5074A
1N4304A	5074A
1N4304B	141A
1N4305	519
1N4308	177
1N4309	177
1N4311	177
1N4315	177
1N4318	177
1N4321	5089A
1N4322	177
1N4323	5071A
1N4323A	5071A
1N4323B	5071A
1N4324	138A
1N4324A	138A
1N4324B	138A
1N4325	5072A
1N4325A	5072A
1N4325B	5072A
1N4326	139A
1N4326A	139A
1N4326B	139A
1N4327	140A
1N4327A	140A
1N4327B	140A
1N4328	5074A
1N4328A	5074A
1N4328B	5074A
1N4329	142A
1N4329A	142A
1N4329B	142A
1N4330	143A
1N4330A	143A
1N4330B	143A
1N4331	145A
1N4331A	145A
1N4331B	145A
1N4332	5075A
1N4332A	5075A
1N4332B	5075A
1N4333	5077A
1N4333A	5077A
1N4333B	5077A
1N4334	5079A
1N4334A	5079A
1N4334B	5079A
1N4335	5080A
1N4335A	5080A
1N4335B	5080A
1N4336	5081A
1N4336A	5081A
1N4336B	5081A
1N4337	146A
1N4337A	146A
1N4337B	146A
1N4338	5084A
1N4338A	5084A
1N4338B	5084A
1N4339	147A
1N4339A	147A
1N4339B	147A
1N4340	5085A
1N4340A	5085A
1N4340B	5085A
1N4341	5086A
1N4341A	5086A
1N4341B	5086A
1N4342	5087A
1N4342A	5087A
1N4342B	5087A
1N4343	5088A
1N4343A	5088A
1N4343B	5088A
1N4344	5089A
1N4344A	5089A
1N4344B	5089A
1N4345	5090A
1N4345A	5090A
1N4345B	5090A
1N4346	149A
1N4346A	149A
1N4346B	149A
1N4347	5092A
1N4347A	5092A
1N4347B	5092A
1N4348	5093A
1N4348A	5093A
1N4348B	5093A
1N4349	150A
1N4349A	150A
1N4349B	150A
1N4350	5095A
1N4350A	5095A
1N4350B	5095A
1N4351	5096A
1N4351A	5096A
1N4351B	5096A
1N4352	151A
1N4352A	151A
1N4352B	151A
1N4353	5097A
1N4353A	5097A
1N4353B	5097A
1N4354	5098A
1N4354A	5098A
1N4354B	5098A
1N4355	5100A
1N4355A	5100A
1N4355B	5100A
1N4356	5101A
1N4356A	5101A
1N4356B	5101A
1N4357	5103A
1N4357A	5103A

To Be Replaced	ECG Replacement
1N4357B	5103A
1N4358	5105A
1N4358A	5105A
1N4358B	5105A
1N4360	5072A
1N4361	125
1N4363	177
1N4364	116
1N4365	116
1N4366	116
1N4367	116
1N4368	116
1N4369	116
1N4370	5000A
1N4370A	5000A
1N4371	5002A
1N4371A	5063A
1N4372	5004A
1N4372A	5065A
1N4375	177
1N4382	177
1N4383	116
1N4384	116
1N4385	116
1N4389	178
1N4392	177
1N4395	177
1N4395A	177
1N4400	5071A
1N4400A	5071A
1N4400B	5071A
1N4401	138A
1N4401A	138A
1N4401B	138A
1N4402	5072A
1N4402A	5072A
1N4402B	5072A
1N4403	139A
1N4403A	139A
1N4403B	139A
1N4404	140A
1N4404A	140A
1N4404B	140A
1N4405	5074A
1N4405A	5074A
1N4405B	5074A
1N4406	142A
1N4406A	142A
1N4406B	142A
1N4407	143A
1N4407A	143A
1N4407B	143A
1N4408	145A
1N4408A	145A
1N4408B	145A
1N4409	5075A
1N4409A	5075A
1N4410	5077A
1N4410A	5077A
1N4410B	5077A
1N4411	5079A
1N4411A	5079A
1N4411B	5079A
1N4412	5080A
1N4412A	5080A
1N4412B	5080A
1N4413	5081A
1N4413A	5081A
1N4413B	5081A
1N4414	146A
1N4414A	146A
1N4414B	146A
1N4415	5084A
1N4415A	5084A
1N4416	147A
1N4416A	147A
1N4416B	147A
1N4417	5085A
1N4417A	5085A
1N4417B	5085A
1N4418	5086A
1N4418A	5086A
1N4418B	5086A
1N4419	5087A
1N4419A	5087A
1N4419B	5087A
1N4420	5088A
1N4420A	5088A
1N4420B	5088A
1N4421	5089A
1N4421A	5089A
1N4422	5090A
1N4422A	5090A
1N4422B	5090A
1N4423	149A
1N4423A	149A
1N4423B	149A
1N4424	5092A
1N4424A	5092A
1N4424B	5092A
1N4425	5093A
1N4425A	5093A
1N4425B	5093A
1N4426	150A
1N4426A	150A
1N4426B	150A
1N4427	5095A
1N4427A	5095A
1N4428	5096A
1N4428A	5096A
1N4428B	5096A
1N4429	151A
1N4429A	151A
1N4429B	151A
1N4430	5097A

To Be Replaced	ECG Replacement
1N4430A	5097A
1N4430B	5097A
1N4431	5098A
1N4431A	5098A
1N4431B	5098A
1N4432	5100A
1N4432A	5100A
1N4432B	5100A
1N4433	5101A
1N4433A	5101A
1N4434	5103A
1N4434A	5103A
1N4434B	5103A
1N4435	5105A
1N4435A	5105A
1N4435B	5105A
1N4446	519
1N4447	519
1N4448	519
1N4449	519
1N4450	177
1N4453	177
1N4454	519
1N4455	177
1N4458	5866
1N4458R	5890
1N4459	5868
1N4460	5119A
1N4461	5120A
1N4462	5121A
1N4463	5122A
1N4464	5124A
1N4465	5125A
1N4466	5126A
1N4467	5127A
1N4468	5128A
1N4469	5130A
1N4470	5131A
1N4471	5133A
1N4472	5135A
1N4473	5136A
1N4474	5137A
1N4475	5139A
1N4476	5141A
1N4477	5142A
1N4478	5143A
1N4479	5144A
1N4480	5145A
1N4481	5146A
1N4482	5147A
1N4483	5148A
1N4484	5150A
1N4485	5151A
1N4486	5152A
1N4487	5153A
1N4488	5155A
1N4489	5156A
1N4490	5157A
1N4491	5158A
1N4492	5159A
1N4493	5161A
1N4494	5162A
1N4495	5164A
1N4496	5166A
1N4499	137A
1N4501	5014A
1N4502	109
1N4503	5142A
1N4504	5166A
1N4506	5874
1N4507	5878
1N4508	5882
1N4509	5886
1N4510	5890
1N4514	5808
1N4517	5802
1N4523	109
1N4525	5986
1N4526	5990
1N4527	5994
1N4528	5998
1N4529	6002
1N4531	177
1N4532	177
1N4533	177
1N4534	177
1N4535	5066A
1N4536	177
1N4547	177
1N4548	177
1N4549	5240A
1N4549A	5240A
1N4550	5241A
1N4550A	5241A
1N4551	5242A
1N4551A	5242A
1N4552	5243A
1N4552A	5243A
1N4553	5244A
1N4553A	5244A
1N4554	5246A
1N4554A	5246A
1N4555	5247A
1N4555A	5247A
1N4556	5248A
1N4556A	5248A
1N4583	141A
1N4583A	141A
1N4583B	141A
1N4585	5808
1N4586	5808
1N4609	613
1N4609A	613
1N4617	5000A
1N4618	5063A

To Be Replaced	ECG Replacement
1N4619	5065A
1N4620	5066A
1N4621	134A
1N4622	5067A
1N4623	5068A
1N4624	5069A
1N4625	5010A
1N4626	136A
1N4627	137A
1N4628	5071A
1N4629	138A
1N4630	5072A
1N4631	139A
1N4632	140A
1N4633	5074A
1N4634	142A
1N4635	143A
1N4636	145A
1N4637	5075A
1N4638	5077A
1N4639	5079A
1N4640	5080A
1N4641	5081A
1N4642	146A
1N4643	5084A
1N4644	147A
1N4645	5085A
1N4646	5086A
1N4647	5087A
1N4648	5088A
1N4649	5066A
1N4650	134A
1N4651	5067A
1N4652	5068A
1N4653	5069A
1N4654	5116A
1N4655	136A
1N4656	137A
1N4657	5071A
1N4658	138A
1N4659	5072A
1N4660	139A
1N4661	140A
1N4662	5074A
1N4663	142A
1N4664	143A
1N4665	145A
1N4666	5075A
1N4667	5077A
1N4668	5079A
1N4669	5080A
1N4670	5081A
1N4671	146A
1N4672	5084A
1N4673	147A
1N4674	5085A
1N4675	5086A
1N4676	5087A
1N4677	5088A
1N4681	5000A
1N4682	5063A
1N4683	5065A
1N4684	5066A
1N4685	134A
1N4686	5067A
1N4687	5068A
1N4688	5069A
1N4689	5010A
1N4690	136A
1N4691	137A
1N4692	5071A
1N4693	5015A
1N4694	5072A
1N4695	5073A
1N4696	139A
1N4697	140A
1N4698	5074A
1N4699	142A
1N4700	143A
1N4701	144A
1N4702	145A
1N4703	5075A
1N4704	5076A
1N4705	5077A
1N4706	5078A
1N4707	5079A
1N4708	5080A
1N4709	5081A
1N4710	5032A
1N4711	146A
1N4712	5083A
1N4713	5084A
1N4714	147A
1N4715	5085A
1N4716	5086A
1N4717	5087A
1N4718	507
1N4719	5800
1N4720	5801
1N4721	5802
1N4721R	5802
1N4722	5804
1N4723	5806
1N4724	5808
1N4725	5809
1N4726	177
1N4727	177
1N4728	5066A
1N4728A	5066A
1N4729	134A
1N4729A	134A
1N4730	5067A
1N4730A	5067A
1N4731	5068A
1N4731A	5068A

To Be Replaced	ECG Replacement
1N4732	5069A
1N4732A	5069A
1N4733	135A
1N4733A	5116A
1N4734	136A
1N4734A	136A
1N4735	137A
1N4735A	137A
1N4736	5071A
1N4736A	5071A
1N4737	138A
1N4737A	138A
1N4738	5072A
1N4738A	5072A
1N4739	139A
1N4739A	139A
1N4740	140A
1N4740A	140A
1N4741	5074A
1N4741A	5074A
1N4742	142A
1N4742A	142A
1N4743	142A
1N4743A	143A
1N4744	145A
1N4744A	145A
1N4745	5075A
1N4745A	5075A
1N4746	5077A
1N4746A	5077A
1N4747	5135A
1N4747A	5079A
1N4748	5080A
1N4748A	5080A
1N4749	5081A
1N4749A	5081A
1N4750	146A
1N4750A	146A
1N4751	5084A
1N4751A	5084A
1N4752	147A
1N4752A	147A
1N4753	5085A
1N4753A	5085A
1N4754	5086A
1N4754A	5086A
1N4755	5087A
1N4755A	5087A
1N4756	5088A
1N4756A	5088A
1N4757	5089A
1N4757A	5089A
1N4758	5090A
1N4758A	5090A
1N4759	149A
1N4759A	149A
1N4760	5092A
1N4760A	5092A
1N4761	5093A
1N4761A	5093A
1N4762	150A
1N4762A	150A
1N4763	5095A
1N4763A	5095A
1N4764	5096A
1N4764A	5096A
1N4765	139A
1N4765A	139A
1N4766	139A
1N4766A	139A
1N4767	139A
1N4767A	139A
1N4768	139A
1N4768A	139A
1N4769	139A
1N4770	5018A
1N4770A	5018A
1N4785	516
1N4786	610
1N4786A	610
1N4788	611
1N4788A	611
1N4789	612
1N4789A	612
1N4792	613
1N4792A	613
1N4794	614
1N4794A	614
1N4801	610
1N4801A	610
1N4813B	5124A
1N4816	5800
1N4817	5801
1N4818	125
1N4819	5803
1N4820	5804
1N4821	5805
1N4822	5806
1N4826	506
1N4827	177
1N4828	177
1N4829	177
1N4830	177
1N4831	139A
1N4831A	139A
1N4832	140A
1N4832A	140A
1N4832B	5125A
1N4833	5074A
1N4833A	5074A
1N4833B	5126A
1N4834	142A
1N4834A	142A
1N4834B	5127A
1N4835	143A

To Be Replaced	ECG Replacement
1N4835A	143A
1N4835B	5128A
1N4836	145A
1N4836A	145A
1N4836B	5130A
1N4837	5075A
1N4837A	5075A
1N4837B	5131A
1N4838	5077A
1N4838A	5077A
1N4838B	5133A
1N4839	5079A
1N4839A	5079A
1N4839B	5135A
1N4840	5080A
1N4840B	5136A
1N4841	5081A
1N4841A	5081A
1N4841B	5137A
1N4842	146A
1N4842A	146A
1N4842B	5139A
1N4843	5084A
1N4843A	5084A
1N4843B	5141A
1N4844	147A
1N4844A	147A
1N4844B	5142A
1N4845	5085A
1N4845A	5085A
1N4845B	5143A
1N4846	5086A
1N4846A	5086A
1N4846B	5144A
1N4847	5087A
1N4847A	5087A
1N4847B	5145A
1N4848	5088A
1N4848A	5088A
1N4848B	5146A
1N4849	5089A
1N4849A	5089A
1N4849B	5147A
1N4850	5090A
1N4850A	5090A
1N4850B	5148A
1N4851	5150A
1N4851A	149A
1N4852	5092A
1N4852A	5092A
1N4852B	5151A
1N4853	5093A
1N4853A	5093A
1N4853B	5152A
1N4854	150A
1N4854A	150A
1N4854B	150A
1N4855	5095A
1N4855A	5095A
1N4855B	5155A
1N4856	5096A
1N4856A	5096A
1N4856B	5156A
1N4857	151A
1N4857A	151A
1N4857B	5157A
1N4858	5097A
1N4858A	5097A
1N4858B	5158A
1N4859	5098A
1N4859A	5098A
1N4859B	5159A
1N4860	5100A
1N4860A	5100A
1N4860B	5161A
1N4861	177
1N4862	177
1N4863	177
1N4878	6154
1N4879	6354
1N4880	6354
1N4881	5135A
1N4882	5143A
1N4883	5127A
1N4884	5135A
1N4889	5150A
1N4896	142A
1N4896A	142A
1N4897	143A
1N4897A	143A
1N4898	143A
1N4898A	143A
1N4899	143A
1N4899A	143A
1N4900	143A
1N4900A	143A
1N4901	143A
1N4901A	143A
1N4902	143A
1N4902A	143A
1N4903	143A
1N4903A	143A
1N4904	143A
1N4904A	143A
1N4905	143A
1N4905A	143A
1N4906	143A
1N4906A	143A
1N4907	143A
1N4907A	143A
1N4908	143A
1N4908A	143A
1N4909	143A
1N4909A	143A
1N4910	143A

To Be Replaced	ECG Replacement
1N4910A	143A
1N4911	143A
1N4911A	143A
1N4912	143A
1N4912A	143A
1N4913	143A
1N4913A	143A
1N4914	143A
1N4914A	143A
1N4915	143A
1N4915A	143A
1N4933	507
1N4934	506
1N4935	506
1N4936	506
1N4937	506
1N4938	177
1N4945	506
1N4946	506
1N4947	506
1N4948	506
1N4949	177
1N4950	177
1N4951	178MP
1N4952	178MP
1N4954	5120A
1N4955	5121A
1N4956	5122A
1N4957	5124A
1N4958	5125A
1N4959	5126A
1N4960	5127A
1N4960D	5127A
1N4961	5128A
1N4962	5130A
1N4963	5131A
1N4964	5133A
1N4965	5135A
1N4966	5136A
1N4967	5137A
1N4968	5139A
1N4969	5141A
1N4970	5142A
1N4971	5143A
1N4972	5144A
1N4973	5145A
1N4974	5146A
1N4975	5147A
1N4976	5148A
1N4977	5150A
1N4978	5151A
1N4979	5152A
1N4980	5153A
1N4981	5155A
1N4982	5156A
1N4983	5157A
1N4984	5158A
1N4985	5159A
1N4986	5161A
1N4987	5162A
1N4988	5164A
1N4989	5166A
1N4991	5158A
1N4997	5800
1N4998	5801
1N4999	5802
1N5000	5804
1N5001	5806
1N5002	5808
1N5003	5809
1N5004	5801
1N5005	5802
1N5006	5804
1N5007	5806
1N5008	5111A
1N5008A	5111A
1N5009	5112A
1N5009A	5112A
1N5010	5113A
1N5010A	5113A
1N5011	5114A
1N5011A	5114A
1N5012	5115A
1N5012A	5115A
1N5013	5116A
1N5013A	5116A
1N5014	5117A
1N5014A	5117A
1N5015	5119A
1N5015A	5119A
1N5016	5120A
1N5016A	5120A
1N5017	5121A
1N5017A	5121A
1N5018	5122A
1N5018A	5122A
1N5019	5124A
1N5019A	5124A
1N5020	5125A
1N5021	5126A
1N5021A	5126A
1N5022	5127A
1N5022A	5127A
1N5023	5128A
1N5023A	5128A
1N5024	5129A
1N5024A	5129A
1N5025	5130A
1N5025A	5130A
1N5026	5131A
1N5026A	5131A
1N5027	5132A
1N5027A	5132A
1N5028	5133A
1N5029	5134A

To Be Replaced	ECG Replacement
1N5029A	5134A
1N5030	5135A
1N5030A	5135A
1N5031	5136A
1N5031A	5136A
1N5032	5137A
1N5032A	5137A
1N5033	5138A
1N5033A	5138A
1N5034	5139A
1N5034A	5139A
1N5035	5141A
1N5035A	5141A
1N5036	5142A
1N5036A	5142A
1N5037	5143A
1N5037A	5143A
1N5038	5144A
1N5038A	5144A
1N5039	5145A
1N5039A	5145A
1N5040	5146A
1N5040A	5146A
1N5041	5146A
1N5041A	5146A
1N5042	5147A
1N5043	5147A
1N5043A	5147A
1N5044	5147A
1N5044A	5147A
1N5045	5148A
1N5045A	5148A
1N5046	5150A
1N5046A	5150A
1N5047	5151A
1N5047A	5151A
1N5048	5152A
1N5048A	5152A
1N5049	5153A
1N5050	5155A
1N5050A	5155A
1N5051	5156A
1N5051A	5156A
1N5052	5808
1N5053	5808
1N5054	125
1N5054A	125
1N5055	5801
1N5056	5802
1N5057	5803
1N5058	5804
1N5059	116
1N5060	116
1N5061	116
1N5062	125
1N5062(Sears)	177
1N5063	5120A
1N5064	5121A
1N5065	5122A
1N5066	5124A
1N5067	5125A
1N5068	5126A
1N5069	5128A
1N5070	5129A
1N5071	5130A
1N5072	5131A
1N5073	5133A
1N5074	5136A
1N5075	5137A
1N5076	5139A
1N5077	5141A
1N5078	5142A
1N5079	5143A
1N5080	5144A
1N5081	5144A
1N5082	5145A
1N5083	5146A
1N5084	5146A
1N5085	5147A
1N5086	5147A
1N5087	5148A
1N5088	5149A
1N5089	5150A
1N5090	5151A
1N5092	5152A
1N5093	5153A
1N5094	5153A
1N5095	5155A
1N5096	5157A
1N5097	5158A
1N5098	5159A
1N5099	5160A
1N5100	5162A
1N5101	5163A
1N5102	5164A
1N5103	5165A
1N5104	5166A
1N5118	5129A
1N5119	5144A
1N5120	5146A
1N5121	5147A
1N5122	5149A
1N5123	5151A
1N5124	5153A
1N5125	5155A
1N5126	5160A
1N5127	5163A
1N5128	5165A
1N5129	5159(2)
1N5131	5162(2)
1N5132	5163(2)
1N5133	5165(2)
1N5134	5166(2)
1N5139	610
1N5139A	610

To Be Replaced	ECG Replacement
1N5140	611
1N5140A	611
1N5141	612
1N5141A	612
1N5144	613
1N5144A	613
1N5170	156
1N5171	5800
1N5172	156
1N5173	5803
1N5174	5804
1N5175	5805
1N5176	5806
1N5177	156
1N5178	156
1N5179	178
1N5188	506
1N5189	506
1N5190	506
1N5194	177
1N5195	177
1N5196	177
1N5197	5800
1N5198	117
1N5199	5802
1N5200	5804
1N5201	5806
1N5206	5806
1N5208	177
1N5209	177
1N5210	177
1N5211	116
1N5212	116
1N5213	116
1N5214	125
1N5215	116
1N5216	116
1N5217	116
1N5218	125
1N5219	177
1N5220	177
1N5221	5000A
1N5221A	5000A
1N5222	5001A
1N5222A	5001A
1N5222B	5062A
1N5223	5002A
1N5223A	5002A
1N5223B	5063A
1N5224	5003A
1N5224A	5003A
1N5224B	5064A
1N5225	5004A
1N5225A	5004A
1N5225B	5065A
1N5226	5005A
1N5226A	5005A
1N5226B	5066A
1N5227	5006A
1N5227A	5006A
1N5227B	134A
1N5228	5007A
1N5228A	5007A
1N5229	5008A
1N5229A	5008A
1N5229B	5068A
1N5230	5009A
1N5230A	5009A
1N5230B	5069A
1N5231	5010A
1N5231A	5010A
1N5231B	139A
1N5232	5011A
1N5232A	5011A
1N5232B	136A
1N5233	5012A
1N5233A	5012A
1N5233B	5070A
1N5234	5013A
1N5234A	5013A
1N5234B	137A
1N5235	5014A
1N5235A	5014A
1N5235B	5071A
1N5236	5015A
1N5236A	5015A
1N5236B	138A
1N5237	5016A
1N5237A	5016A
1N5237B	5072A
1N5238A	5017A
1N5238B	5073A
1N5239	5018A
1N5239A	5018A
1N5239B	139A
1N5240	5019A
1N5240A	5019A
1N5240B	140A
1N5241	5020A
1N5241A	5020A
1N5241B	5074A
1N5242	5021A
1N5242A	5021A
1N5242B	142A
1N5243	5022A
1N5243A	5022A
1N5243B	143A
1N5244	5023A
1N5244A	5023A
1N5244B	144A
1N5245	5024A
1N5245A	5024A
1N5245B	145A
1N5246	5025A
1N5246A	5025A

To Be Replaced	ECG Replacement
1N5246B	5075A
1N5247	5026A
1N5247A	5026A
1N5247B	5076A
1N5248	5027A
1N5248A	5027A
1N5248B	5077A
1N5249	5028A
1N5249A	5028A
1N5249B	5078A
1N5250	5029A
1N5250A	5029A
1N5250B	5079A
1N5251	5030A
1N5251A	5030A
1N5251B	5080A
1N5252	5031A
1N5252A	5031A
1N5252B	5081A
1N5253	5032A
1N5253A	5032A
1N5253B	5082A
1N5254	5033A
1N5254A	5033A
1N5254B	146A
1N5255	5034A
1N5255A	5034A
1N5255B	5083A
1N5256	5035A
1N5256A	5035A
1N5256B	5084A
1N5257	5036A
1N5257A	5036A
1N5257B	147A
1N5258	5037A
1N5258A	5037A
1N5258B	5085A
1N5259	5038A
1N5259A	5038A
1N5259B	5086A
1N5260	5039A
1N5260A	5039A
1N5260B	5087A
1N5261	5040A
1N5261A	5040A
1N5261B	5088A
1N5262	5041A
1N5262A	5041A
1N5262B	5089A
1N5263	5042A
1N5263A	5042A
1N5263B	5090A
1N5264	5043A
1N5264A	5043A
1N5264B	5091A
1N5265	5044A
1N5265A	5044A
1N5265B	149A
1N5266	5045A
1N5266A	5045A
1N5266B	5092A
1N5267	5046A
1N5267A	5046A
1N5267B	5093A
1N5268	5047A
1N5268A	5047A
1N5268B	150A
1N5269	5048A
1N5269A	5048A
1N5269B	5094A
1N5270	5049A
1N5270A	5049A
1N5270B	5095A
1N5271	5050A
1N5271A	5050A
1N5271B	5096A
1N5272	5051A
1N5272A	5051A
1N5272B	151A
1N5273	5052A
1N5273A	5052A
1N5273B	5097A
1N5274	5053A
1N5274A	5053A
1N5274B	5098A
1N5275	5054A
1N5275A	5054A
1N5275B	5099A
1N5276	5055A
1N5276A	5055A
1N5277	5056A
1N5277A	5056A
1N5277B	5101A
1N5278	5057A
1N5278A	5057A
1N5278B	5102A
1N5279	5058A
1N5279A	5058A
1N5279B	5103A
1N5280	5059A
1N5280A	5059A
1N5280B	5104A
1N5281	5060A
1N5281A	5060A
1N5281B	5105A
1N5307B	5148A
1N5315	177
1N5316	177
1N5317	177
1N5318	177
1N5319	177
1N5320	177
1N5330	5115A
1N5333	5111A
1N5333A	5111A

To Be Replaced	ECG Replacement
1N5333B	5111A
1N5334	5112A
1N5334A	5112A
1N5334B	5112A
1N5335	5113A
1N5335A	5113A
1N5335B	5113A
1N5336	5114A
1N5336A	5114A
1N5336B	5114A
1N5337	5115A
1N5337A	5115A
1N5337B	5115A
1N5338A	5116A
1N5338B	5116A
1N5339	5117A
1N5339A	5117A
1N5339B	5117A
1N5340	5118A
1N5340A	5118A
1N5340B	5118A
1N5341	5119A
1N5341A	5119A
1N5341B	5119A
1N5342	5120A
1N5342A	5120A
1N5342B	5120A
1N5343	5121A
1N5343A	5121A
1N5343B	5121A
1N5344	5122A
1N5344A	5122A
1N5344B	5122A
1N5345	5123A
1N5345A	5123A
1N5345B	5183A
1N5346	5124A
1N5346A	5124A
1N5346B	5124A
1N5347	5125A
1N5347A	5125A
1N5347B	5125A
1N5348	5126A
1N5348A	5126A
1N5348B	5126A
1N5349	5127A
1N5349A	5127A
1N5349B	5127A
1N5350	5128A
1N5350A	5128A
1N5350B	5128A
1N5351	5129A
1N5351A	5129A
1N5351B	5129A
1N5352	5130A
1N5352A	5130A
1N5352B	5130A
1N5353	5131A
1N5353A	5131A
1N5353B	5131A
1N5354	5132A
1N5354A	5132A
1N5354B	5132A
1N5355	5133A
1N5355A	5133A
1N5355B	5133A
1N5356A	5134A
1N5356B	5134A
1N5357	5135A
1N5357A	5135A
1N5357B	5135A
1N5358	5136A
1N5358A	5136A
1N5358B	5136A
1N5359	5137A
1N5359A	5137A
1N5359B	5137A
1N5360	5138A
1N5360A	5138A
1N5360B	5138A
1N5361	5139A
1N5361A	5139A
1N5361B	5139A
1N5362	5140A
1N5362A	5140A
1N5362B	5140A
1N5363	5141A
1N5363A	5141A
1N5363B	5141A
1N5364	5142A
1N5364A	5142A
1N5364B	5142A
1N5365	5143A
1N5365A	5143A
1N5365B	5143A
1N5366	5144A
1N5366A	5144A
1N5366B	5144A
1N5367	5145A
1N5367A	5145A
1N5367B	5145A
1N5368	5146A
1N5368A	5146A
1N5368B	5146A
1N5369	5147A
1N5369A	5147A
1N5369B	5147A
1N5370	5148A
1N5370A	5148A
1N5371	5149A
1N5371A	5149A
1N5371B	5149A
1N5372	5150A
1N5372A	5150A
1N5372B	5150A

To Be Replaced	ECG Replacement
1N5373	5151A
1N5373A	5151A
1N5373B	5151A
1N5374	5152A
1N5374A	5152A
1N5374B	5152A
1N5375	5153A
1N5375A	5153A
1N5375B	5153A
1N5376	5154A
1N5376A	5154A
1N5376B	5154A
1N5377	5155A
1N5377A	5155A
1N5377B	5155A
1N5378	5156A
1N5378A	5156A
1N5378B	5156A
1N5379	5157A
1N5379A	5157A
1N5379B	5157A
1N5380	5158A
1N5380A	5158A
1N5380B	5158A
1N5381	5159A
1N5381A	5159A
1N5381B	5159A
1N5382	5160A
1N5382A	5160A
1N5382B	5160A
1N5383	5161A
1N5383A	5161A
1N5383B	5161A
1N5384	5162A
1N5384A	5162A
1N5384B	5162A
1N5385	5163A
1N5385A	5163A
1N5385B	5163A
1N5386	5164A
1N5386A	5164A
1N5387	5165A
1N5387A	5165A
1N5388	5166A
1N5388A	5166A
1N5388B	5166A
1N5391	5800
1N5392	125
1N5392GP	5801
1N5393	5802
1N5394	5803
1N5395	5804
1N5396	5805
1N5397	5806
1N5398	5808
1N5399	5809
1N5400	156
1N5401	156
1N5402	5802
1N5403	5803
1N5404	5804
1N5405	5805
1N5406	5806
1N5407	5808
1N5408	5809
1N5409	5988
1N5409R	5989
1N5410	5876
1N5410R	5877
1N5411	6408
1N5412	117
1N5413	177
1N5414	177
1N5415	507
1N5418	506
1N5419	506
1N5426	177
1N5433	506
1N5434	506
1N5435	5886
1N5441	610
1N5441A	610
1N5443	611
1N5443A	611
1N5444	612
1N5444A	612
1N5448	613
1N5448A	613
1N5450	614
1N5450A	614
1N5461	610
1N5461A	610
1N5463	611
1N5463A	611
1N5464	612
1N5464A	612
1N5468	613
1N5468A	613
1N5470	614
1N5470A	614
1N5518	5005A
1N5518A	5005A
1N5518B	5066A
1N5519	5006A
1N5519A	5006A
1N5519B	134A
1N5520	5007A
1N5520A	5007A
1N5520B	5067A
1N5521	5008A
1N5521A	5008A
1N5521B	5068A
1N5522	5009A
1N5522A	5009A
1N5522B	5069A

To Be Replaced	ECG Replacement
1N5523	5010A
1N5523A	5010A
1N5524	5011A
1N5524A	5011A
1N5524B	136A
1N5525	5013A
1N5525A	5013A
1N5525B	137A
1N5526	5014A
1N5526A	5014A
1N5526B	5071A
1N5527	5015A
1N5527A	5015A
1N5527B	138A
1N5528	5016A
1N5528A	5016A
1N5528B	5072A
1N5529	5018A
1N5529A	5018A
1N5529B	139A
1N5530	5019A
1N5530A	5019A
1N5530B	140A
1N5531A	5020A
1N5531B	5074A
1N5532	5021A
1N5532A	5021A
1N5532B	142A
1N5533	5022A
1N5533A	5022A
1N5533B	143A
1N5534	5023A
1N5534A	5023A
1N5534B	144A
1N5535	5024A
1N5535A	5024A
1N5535B	145A
1N5536	5025A
1N5536A	5025A
1N5536B	5075A
1N5537	5026A
1N5537A	5026A
1N5537B	5076A
1N5538	5027A
1N5538A	5027A
1N5538B	5077A
1N5539A	5028A
1N5539B	5078A
1N5540	5029A
1N5540A	5029A
1N5540B	5079A
1N5541	5030A
1N5541A	5030A
1N5541B	5080A
1N5542	5031A
1N5542A	5031A
1N5542B	5081A
1N5543	5032A
1N5543A	5032A
1N5543B	5082A
1N5544	5034A
1N5544A	5034A
1N5544B	5083A
1N5545	5035A
1N5545A	5035A
1N5545B	5084A
1N5546	5036A
1N5546A	5036A
1N5546C	147A
1N5552	506
1N5553	506
1N5554	506
1N5559	5071A
1N5559A	5071A
1N5559B	5071A
1N5560	138A
1N5560A	138A
1N5560B	138A
1N5561	5072A
1N5561A	5072A
1N5561B	5072A
1N5562	139A
1N5562A	139A
1N5562B	139A
1N5563	140A
1N5563A	140A
1N5563B	140A
1N5564	5074A
1N5564A	5074A
1N5564B	5074A
1N5565	142A
1N5565A	142A
1N5565B	142A
1N5566	143A
1N5566A	143A
1N5566B	143A
1N5567	145A
1N5567A	145A
1N5567B	145A
1N5568	5075A
1N5568A	5075A
1N5568B	5075A
1N5569	5077A
1N5569A	5077A
1N5569B	5077A
1N5570	5079A
1N5570A	5079A
1N5570B	5079A
1N5571	5080A
1N5571A	5080A
1N5571B	5080A
1N5572	5081A
1N5572A	5081A
1N5572B	5081A
1N5573	146A

To Be Replaced	ECG Replacement
1N5573A	146A
1N5573B	146A
1N5574	5084A
1N5574A	5084A
1N5574B	5084A
1N5575	147A
1N5575A	147A
1N5575B	147A
1N5576	5085A
1N5576A	5085A
1N5576B	5085A
1N5577	5086A
1N5577A	5086A
1N5577B	5086A
1N5578	5087A
1N5578A	5087A
1N5578B	5087A
1N5579	5088A
1N5579A	5088A
1N5579B	5088A
1N5580	5089A
1N5580A	5089A
1N5580B	5089A
1N5581	5090A
1N5581A	5090A
1N5581B	5090A
1N5582	149A
1N5582A	149A
1N5582B	149A
1N5583	5092A
1N5583A	5092A
1N5584	5093A
1N5584A	5093A
1N5584B	5093A
1N5585	150A
1N5585A	150A
1N5585B	150A
1N5586	5095A
1N5586A	5095A
1N5586B	5095A
1N5587	5096A
1N5587A	5096A
1N5587B	5096A
1N5588	151A
1N5588A	151A
1N5588B	151A
1N5589	5097A
1N5589A	5097A
1N5589B	5097A
1N5590	5098A
1N5590A	5098A
1N5590B	5098A
1N5591	5100A
1N5591A	5100A
1N5591B	5100A
1N5592	5101A
1N5592A	5101A
1N5592B	5101A
1N5593	5103A
1N5593A	5103A
1N5593B	5103A
1N5594	5105A
1N5594A	5105A
1N5594B	5105A
1N5605	177
1N5606	177
1N5607	177
1N5610	177
1N5616	506
1N5617	506
1N5618	506
1N5619	506
1N5620	506
1N5621	506
1N5671A	5003A
1N5681	610
1N5681A	610
1N5683	611
1N5683A	611
1N5684	612
1N5684A	612
1N5687	613
1N5687A	613
1N5689	614
1N5689A	614
1N5696	610
1N5696A	610
1N5699	612
1N5699A	612
1N5702	613
1N5702A	613
1N5711	177
1N5712	177
1N5713	177
1N5719	177
1N5728	5009A
1N5728B	5069A
1N5729	5010A
1N5730	5011A
1N5730B	136A
1N5731	5013A
1N5731B	137A
1N5732	5014A
1N5732B	5071A
1N5733	5015A
1N5733B	138A
1N5734	5016A
1N5734B	5072A
1N5735	5018A
1N5735B	139A
1N5736	5019A
1N5736B	140A
1N5737	5020A
1N5737B	5074A
1N5738	5021A

To Be Replaced	ECG Replacement
1N5738B	142A
1N5739	5022A
1N5739B	143A
1N5740	5024A
1N5740B	145A
1N5741	5025A
1N5741B	5075A
1N5742	5027A
1N5742B	5077A
1N5743	5029A
1N5743B	5079A
1N5744	5030A
1N5744B	5080A
1N5745	5031A
1N5745B	5081A
1N5746	5033A
1N5746B	146A
1N5746C	5033A
1N5746D	5033A
1N5747	5035A
1N5747B	5084A
1N5748	5036A
1N5748B	147A
1N5749	5037A
1N5749B	5085A
1N5750	5038A
1N5750B	5086A
1N5751	5039A
1N5751B	5087A
1N5752	5040A
1N5752B	5088A
1N5753	5041A
1N5753B	5089A
1N5754	5042A
1N5754B	5090A
1N5755	5044A
1N5755B	149A
1N5756	5045A
1N5756B	5092A
1N5757B	5093A
1N5758	6406
1N5758A	6406
1N5759	6407
1N5759A	6407
1N5760	6407
1N5760A	6408
1N5761	6408
1N5761A	6407
1N5767	177
1N5838B	5062A
1N5839B	5063A
1N5840B	5064A
1N5841B	5065A
1N5842B	5066A
1N5843B	134A
1N5844B	5067A
1N5845B	5068A
1N5846B	5069A
1N5848B	136A
1N5849B	5070A
1N5850B	137A
1N5851B	5071A
1N5852	138A
1N5852A	138A
1N5852B	138A
1N5853	5016A
1N5853B	5072A
1N5854B	5073A
1N5855A	139A
1N5855B	139A
1N5856B	140A
1N5857B	5074A
1N5858A	142A
1N5858B	142A
1N5859B	143A
1N5860B	144A
1N5861B	145A
1N5862B	5075A
1N5863B	5076A
1N5864B	5077A
1N5865B	5078A
1N5866B	5079A
1N5867B	5080A
1N5868B	5081A
1N5869B	5082A
1N5870B	146A
1N5871B	5083A
1N5872B	5084A
1N5873B	147A
1N5874B	5085A
1N5875B	5086A
1N5876B	5087A
1N5877B	5088A
1N5878B	5089A
1N5879B	5090A
1N5880B	5091A
1N5881B	149A
1N5882B	5092A
1N5883B	5093A
1N5884B	150A
1N5885B	5094A
1N5886B	5095A
1N5887B	5096A
1N5889B	5097A
1N5890	5098A
1N5890A	5098A
1N5890B	5098A
1N5891	5099A
1N5891A	5099A
1N5891B	5099A
1N5892B	5100A
1N5893B	5101A
1N5894B	5102A
1N5895B	5103A
1N5896B	5104A

To Be Replaced	ECG Replacement
1N5897B	5105A
1N5913B	5111A
1N5914B	5112A
1N5915B	5113A
1N5916B	5114A
1N5917B	5115A
1N5918B	5116A
1N5919B	5117A
1N5920B	5119A
1N5921B	5120A
1N5922B	5121A
1N5923B	5122A
1N5924B	5124A
1N5925B	5125A
1N5926B	5126A
1N5927B	5127A
1N5928B	5128A
1N5929B	5130A
1N5930B	5131A
1N5931B	5133A
1N5932B	5135A
1N5933B	5136A
1N5934B	5137A
1N5935B	5139A
1N5936B	5141A
1N5937B	5142A
1N5938B	5143A
1N5939B	5144A
1N5940B	5145A
1N5941B	5146A
1N5942B	5147A
1N5943B	5148A
1N5944B	5150A
1N5945B	5151A
1N5946B	5152A
1N5948B	5155A
1N5949B	5156A
1N5950B	5157A
1N5951B	5158A
1N5952B	5159A
1N5953B	5161A
1N5954B	5162A
1N5955B	5164A
1N5956B	5166A
1N5968	611
1N5968A	611
1N5985B	5061A
1N5986B	5063A
1N5987B	5065A
1N5988B	5066A
1N5989B	134A
1N5990B	5067A
1N5991B	5068A
1N5992B	5069A
1N5994B	136A
1N5995B	137A
1N5996B	5071A
1N5997B	138A
1N5998B	5072A
1N5999B	139A
1N6000B	140A
1N6001B	5074A
1N6002B	142A
1N6003B	143A
1N6004B	145A
1N6005B	5075A
1N6006B	5077A
1N6007B	5079A
1N6008B	5080A
1N6009B	5081A
1N6010B	146A
1N6012B	147A
1N6013B	5085A
1N6014B	5086A
1N6015B	5087A
1N6016B	5088A
1N6017B	5089A
1N6018B	5090A
1N6019B	149A
1N6020B	5092A
1N6021B	5093A
1N6022B	150A
1N6023B	5095A
1N6024B	5096A
1N6025B	151A
1N6026B	5097A
1N6027B	5098A
1N6028B	5100A
1N6029B	5101A
1N6030B	5103A
1N6031B	5105A
1N6068B	137A
1N6082B	5068A
1N6083B	5069A
1N6085B	136A
1N6087B	5071A
1N6088B	138A
1N6089B	5072A
1N6090B	139A
1N6091B	140A
1N7001	116
1N7001P1	116
1N7001P2	116
1N7001P3	116
1N7002	116
1N7002P1	116
1N7002P2	116
1N7002P3	116
1N7003	116
1N7003P1	116
1N7003P2	116
1N7003P3	116
1N7004	116
1N7004P1	116
1N7004P2	116

To Be Replaced	ECG Replacement
1N7004P3	116
1N7005	116
1N7005P1	116
1N7005P2	116
1N7005P3	116
1N7006	125
1N7006P1	125
1N7006P2	125
1N7006P3	125
1N7007	125
1N7007P1	125
1N7007P2	125
1N7007P3	125
1N8001	116
1N8001P1	116
1N8001P2	116
1N8001P3	116
1N8002	116
1N8002P1	116
1N8002P2	116
1N8002P3	116
1N8003	116
1N8003P1	116
1N8003P2	116
1N8003P3	116
1N8004	116
1N8004P1	116
1N8004P2	116
1N8004P3	116
1N8005	116
1N8005P2	116
1N8005P3	116
1N8006	125
1N8006P1	125
1N8006P2	125
1N8006P3	125
1N8007	125
1N8007P1	125
1N8007P2	125
1N8007P3	125
1N9001	116
1N9001P1	116
1N9001P2	116
1N9001P3	116
1N9002	116
1N9002P1	116
1N9002P2	116
1N9002P3	116
1N9003	116
1N9003P1	116
1N9003P2	116
1N9003P3	116
1N9004	116
1N9004P1	116
1N9004P2	116
1N9004P3	116
1N9005	116
1N9005P1	116
1N9005P2	116
1N9005P3	116
1N9006	125
1N9006P1	125
1N9006P2	125
1N9006P3	125
1N9007	125
1N9007P1	125
1N9007P2	125
1N9007P3	125
1N33548	116
1NA4	109
1NA4G	109
1NC61684	116
1NE11	156
1NJ27	125
1NJ33233	109
1NJ60284	109
1NJ61224	109
1NJ61225	136A
1NJ61433	177
1NJ61675	109
1NJ61676	116
1NJ61677	177
1NJ61725	177
1NJ61726	116
1NJ70972	113
1NJ70973	109
1NJ70976	506
1NJ70980	177
1NJ71126	507
1NJ71185	109
1NJ71186	507
1NJ71224	177
1P100	5400
1P101	5401
1P102	5402
1P103	5403
1P104	5404
1P541	109
1P542	109
1P643	5800
1P644	5801
1P645	5803
1P646	5803
1P647	5804
1P649	5806
1P720	5897
1R0	177
1R01	116
1R1D	116
1R1K	116
1R2	177
1R2A	116
1R2D	116
1R2E	116
1R3A	177

To Be Replaced	ECG Replacement
1R3B	506
1R3D	116
1R3G	116
1R3J	116
1R4	177
1R5A	116
1R5B	116
1R5BZ61	156
1R5G	116
1R5GZ61	125
1R5GZ61FA-1	125
1R5GZ61-FA1	125
1R5H	116
1R5TH61	506
1R8.2	5072A
1R8.2A	5072A
1R8.2B	5072A
1R9	116
1R9H	116
1R9I	116
1R9J	116
1R9.1	131
1R9.1A	139A
1R9.1B	139A
1R10	140A
1R10A	140A
1R10B	140A
1R10D3K	177
1R10D3L	506
1R10E	116
1R11	5074A
1R11A	5074A
1R11B	5074A
1R12	142A
1R12A	142A
1R12B	142A
1R13	143A
1R13A	143A
1R13B	143A
1R13OB	5098A
1R14OB	5099A
1R15	145A
1R15A	145A
1R15B	145A
1R15OB	5100A
1R16	5075A
1R16A	5075A
1R16B	5075A
1R18	5077A
1R18A	5077A
1R18B	5077A
1R20	5079A
1R20A	5079A
1R20B	5079A
1R22	5080A
1R22A	5080A
1R22B	5080A
1R24	5081A
1R24A	5081A
1R24B	5081A
1R27	146A
1R27A	146A
1R27B	146A
1R30	5084A
1R30A	5084A
1R30B	5084A
1R31	506
1R33	147A
1R33A	147A
1R33B	147A
1R36	5085A
1R36A	5085A
1R36B	5085A
1R39	5085A
1R39A	5086A
1R39B	5086A
1R43	5087A
1R43A	5087A
1R43B	5087A
1R47	5088A
1R47A	5088A
1R47B	5088A
1R51	5089A
1R51A	5089A
1R51B	5089A
1R56	5090A
1R56A	5090A
1R56B	5090A
1R62	149A
1R62A	149A
1R62B	149A
1R68	5092A
1R68A	5092A
1R68B	5092A
1R75	5093A
1R75A	5093A
1R75B	5093A
1R82	150A
1R82A	150A
1R82B	150A
1R90	116
1R91	5095A
1R91A	5095A
1R91B	5095A
1R96	125
1R100	5096A
1R100A	5096A
1R100B	5096A
1R110	151A
1R110A	151A
1R110B	151A
1R120	5097A
1R120A	5097A
1R120B	5097A
1R130	5098A

To Be Replaced	ECG Replacement
1R130A	5098A
1R130B	5098A
1R140	5099A
1R140A	5099A
1R140B	5099A
1R150	5100A
1R150A	5100A
1R150B	5100A
1R160	5101A
1R160A	5101A
1R160B	5101A
1r161R16B	5075A
1R180	5103A
1R180A	5103A
1R180B	5103A
1R200	5105A
1R200A	5105A
1R200B	5105A
1R1600	5483
1R1601	5483
1R1602	5483
1R1771	5483
1R1772	5483
1R1774	5483
1R1977	184
1RC5	5453
1RC10	5454
1RC20	5455
1RC30	5456
1RC40	5457
1-RE-004	116
1RLD	166
1ROE	177
1ROF	116
1ROH	116
1S005	116
1S010	5550
1S020	5801
1S020(Rect)	5801
1S020(SCR)	5550
1S021	5802
1S023	5804
1S025	5806
1S027	5808
1S030	5800
1S031	5801
1S032	5802
1S034	5804
1S036	5806
1S038	5808
1S1-0336-00-A	130
1S1Z09	116
1S12	177
1S13	109
1S15	109
1S15OO	610
1S17	177
1S17D1	109
1S18	177
1S20	109
1S32	109
1S33	109
1S34	109
1S34A	109
1S34S	109
1S35	109
1S37	5070A
1S38	177
1S40	5801
1S41	5002A
1S42	5803
1S43	5804
1S44	5805
1S45	5806
1S46	5808
1S47	5008A
1S48	612
1S48A	613
1S50	110
1S54	117
1S58	117
1S60	110
1S60P	109
1S71	116
1S72	109
1S73	109
1S74	109
1S75	109
1S76	109
1S78	109
1S79	109
1S80	109
1S81	116
1S82	109
1S83	116
1S84	177
1S85	612
1S85H	612
1S86	612
1S88	109
1S89	177
1S90	116
1S91	116
1S92	116
1S93	116
1S93/SGJ	116
1S94	116
1S95	116
1S96	125
1S97	125
1S98	125
1S99	125
1S99A	177
1S100	116
1S101	116

To Be Replaced	ECG Replacement
1S102	116
1S103	116
1S104	116
1S105	116
1S106	116
1S106A	116
1S107	125
1S108	125
1S109	125
1S110	116
1S110A	116
1S110(Rect)	116
1S110(SCR)	5552
1S111	116
1S112	116
1S113	116
1S113A	116
1S114	116
1S115	116
1S116	116
1S117	125
1S119	116
1S120	116
1S120(Rect)	116
1S120(SCR)	5552
1S121	116
1S121(RECT)	116
1S122	116
1S123	116
1S124	116
1S125	116
1S126	116
1S127	109
1S128FM	110
1S130	177
1S130(ZENER)	139A
1S131	177
1S132	177
1S134	116
1S135	141A
1S136	116
1S136(Zener)	137A
1S137	145A
1S138	125
1S145	611
1S146	5832
1S147	116
1S148	116
1S149	116
1S150	116
1S155	177
1S155-1	177
1S158	109
1S160	5870
1S161	5872
1S162	5874
1S163	5876
1S164	5878
1S165	5880
1S166	5882
1S170	5912
1S171	5914
1S172	5916
1S173	5918
1S174	5920
1S175	5922
1S176	5924
1S180	177
1S-180	177
1S180	177
1S180/5GB	116
1S181	177
1S182	177
1S183	116
1S185	109
1S185OR	116
1S186	109
1S186FM	110
1S186(FM)	109
1S187	109
1S188	109
1S188A	109
1S188A/FM	109
1S188AFM	109
1S188AM	109
1S-188AM	109
1S188EM	109
1S188F	110
1S188FM	109
1S188-FM	109
1S188FM	109
1S188FM-1	109
1S188FM1	109
1S188FM1A	109
1S188FM2	109
1S188FM-2	109
1S188FM-A	109
1S188FMA	109
1S188FMI	110
1S188G	109
1S188MPX	110
1S188P	110
1S188PM	109
1S188S	109
1S188TV	110MP
1S189	109
1S189FM	110MP
1S190	5010A
1S191	5012A
1S192	5014A
1S193	5072A
1S194	5018A
1S195	140A
1S196	5074A
1S197	142A

To Be Replaced	ECG Replacement
1S198	144A
1S199	5077A
1S204	116
1S205	116
1S206	116
1S207	116
1S207SK	177
1S208	116
1S208/2SJ2A	117
1S209	116
1S209/2SJ4A	117
1S210	125
1S210/2SJ6A	125
1S210(Rect)	125
1S210(SCR)	5552
1S211	125
1S211/2SJ8A	125
1S211A	136A
1S212	5017A
1S213	5017A
1S214	5017A
1S215	140A
1S216	140A
1S220	5068A
1S220(SCR)	5552
1S220(Zener)	5068A
1S221	136A
1S222	5071A
1S223	138A
1S224	5073A
1S225	140A
1S226	5074A
1S227	142A
1S228	143A
1S229	144A
1S230	145A
1S231	5075A
1S232	5076A
1S233	5077A
1S234	5078A
1S235	5079A
1S236	5080A
1S237	5081A
1S238	5082A
1S239	146A
1S240	5084A
1S241	147A
1S242	5085A
1S243	5086A
1S244	5087A
1S246	5088A
1S247	5089A
1S248	5089A
1S249	5090A
1S250	149A
1S251	5092A
1S252	5093A
1S253	150A
1S254	5095A
1S255	5096A
1S257	151A
1S258	5097A
1S259	5098A
1S260	5099A
1S261	5100A
1S262	5176A
1S263	5178A
1S264	5181A
1S265	5182A
1S266	5184A
1S267	5186A
1S268	5187A
1S268T	116
1S269	5188A
1S270	5189A
1S271	5190A
1S272	5191A
1S273	5192A
1S274	5193A
1S275	5194A
1S276	5195A
1S277	5196A
1S278	5197AK
1S279	5198A
1S280	5199A
1S281	5200A
1S282	5202A
1S283	5203A
1S284	5204A
1S285	5205A
1S286	5206A
1S287	5208A
1S288	5208A
1S289	5290A
1S290	5210A
1S291	5212A
1S292	5214A
1S293	5215A
1S294	5216A
1S295	5217A
1S296	5219A
1S297	5220A
1S298	5221A
1S300	5223A
1S301	5224A
1S301.5	145A
1S302	5225A
1S303	5226A
1S306	177
1S307	177
1S309	116
1S310	116
1S310(Rect)	116
1S310(SCR)	5554
1S311	117

To Be Replaced	ECG Replacement
1S312	116
1S312(Hitachi)	506
1S313	116
1S314	116
1S315	116
1S315(Hitachi)	506
1S318	109
1S320	135A
1S320(Rect)	135A
1S320(SCR)	5554
1S322	177
1S330	5010A
1S330A	5010A
1S330A1	135A
1S331	137A
1S331A	137A
1S331AZ	137A
1S332	138A
1S332M	5071A
1S333	5072A
1S333Y	5072A
1S334	139A
1S334K	139A
1S334N	139A
1S335	140A
1S335S	5019A
1S336	5074A
1S337	142A
1S337A	142A
1S337E	142A
1S337Y	142A
1S337-Y	142A
1S338	5023A
1S338Q	143A
1S338U	144A
1S339	5027A
1S347	5070A
1S351B	612
1S351M	611
1S351R	613
1S351S	611
1S352	612
1S352M	612
1S352N	612
1S353	613
1S353M	614
1S354	109
1S355	109
1S357	109
1S358	116
1S358S	116
1S358(S)	116
1S395	116
1S396	116
1S397	125
1S398	125
1S399	116
1S400	116
1S401	125
1S402	125
1S410	5832
1S410(Rect)	5832
1S410(SCR)	5554
1S411	5834
1S413	5838
1S415	5842
1S417	5846
1S419	5848
1S420	5872
1S420(Rect)	5872
1S420(SCR)	5554
1S421	5874
1S423	5878
1S425	5882
1S426	109
1S426FM	109
1S426G	109
1S427	5886
1S428	109
1S430	5800
1S431	5801
1S432	5802
1S434	5804
1S436	5806
1S438	5808
1S441	109
1S441(RECT)	5830
1S442	109
1S442(RECT)	5830
1S443(RECT)	5830
1S444	177
1S444(RECT)	5832
1S445(RECT)	5832
1S446	109
1S446D	109
1S-446D	109
1S446(RECT)	5834
1S447	109
1S447P	109
1S448	109
1S449	109
1S451	109
1S452	109
1S453	109
1S454	109
1S455	109
1S456	116
1S457	116
1S458	116
1S459	116
1S466	109
1S467R	109
1S470	5012A
1S471	5014A
1S472	5018A

To Be Replaced	ECG Replacement
1S473	5020A
1S474	5023A
1S475	5027A
1S476	5030A
1S477	5034A
1S478	5037A
1S479	5040A
1S480	5070A
1S481	5071A
1S482	139A
1S483	5074A
1S484	144A
1S485	5077A
1S487	5083A
1S488	5085A
1S489	5088A
1S490	5179AK
1S491	5120A
1S492	5185AK
1S493	5126A
1S494	5190A
1S495	5194AK
1S496	5197A
1S497	5201AK
1S498	5204AK
1S499	5146A
1S510	5556
1S520	5556
1S543	112
1S544	5886
1S545	5890
1S546	5928
1S547	5932
1S553	612
1S554	613
1S555	613
1S556	614
1S557	125
1S558	116
1S559	116
1S560	177
1S568	177
1S588	116
1S610	5556
1S642	177
1S685	116
1S686	125
1S687	125
1S688EA	613
1S689	174
1S689A	174
1S689BK	174
1S692	136A
1S696	142A
1S697	145A
1S700	146A
1S710	5558
1S720	5558
1S750	112
1S750GR	112
1S751	174
1S752	5002A
1S753	5006A
1S754	5008A
1S755	5009A
1S756	5012A
1S757	5014A
1S757A	139A
1S758	5017A
1S758GS	139A
1S759	5019A
1S760	5022A
1S761	5025A
1S762	5028A
1S763	5031A
1S764	5033A
1S766	611
1S767	611
1S767A	611
1S769	611
1S777	516/209
1S788	109
1S810	5558
1S820	5558
1S844	116
1S846	116
1S848	125
1S849	116
1S849,R	116
1S849R	116(2)
1S850	125
1S885	116
1S891	611
1S892	612
1S893	613
1S920	177
1S921	177
1S921(RECT)	5802
1S922(DIODE)	177
1S922(RECT)	5804
1S923	177
1S923(RECT)	5806
1S924	5808
1S925	5809
1S926	5874
1S926G	109
1S927	5878
1S928	5882
1S929	5886
1S930	5890
1S931	5916
1S932	5920
1S933	5924
1S934	5928
1S935	5932

To Be Replaced	ECG Replacement
1S936	5986
1S939	5998
1S940	6002
1S941	177
1S941/4454C	116
1S942	177
1S945	177
1S951	177
1S952	177
1S953(DIODE)	177
1S953(RECTIFIER)	156
1S954	177
1S955	177
1S963	117
1S983	177
1S990	177
1S990A	177
1S990-AM	177
1S990AM	109
1S990S	145A
1S990S(Diode)	177
1S990S(Zener)	145A
1S993	5004A
1S994	5067A
1S994A	177
1S994S	5069A
1S994Y	138A
1S995	611
1S1000	112
1S1000A	112
1S1001	177
1S1004	116
1S1007	109
1S1007S	109
1S1029	601
1S1052	177
1S1053	177
1S1061	116
1S1062	116
1S1063	116
1S1064	116
1S1065	125
1S1066	125
1S1071	156
1S1072	5802
1S1073	5804
1S1074	5806
1S1075	5808
1S1076	156
1S1096	116
1S1124	177
1S1155	177
1S1204	601
1S1209	601
1S1210	601
1S1211	601
1S1212	601
1S1212A	601
1S1213	177
1S1214	177
1S1215	177
1S1216	177
1S1217	177
1S1218	177
1S1218GR	177
1S1219	177
1S1220	177
1S1221	116
1S1222	116
1S1223	125
1S1224	116
1S1225	125
1S1225A	125
1S1226	506
1S1230	116
1S1231	116
1S1232	116
1S1233	125
1S1234	125
1S1237	506
1S1238	506
1S1255A	125
1S1288	5914
1S1302	177
1S1303	177
1S1305	177
1S1315	611
1S1341	116
1S1342	116
1S1343	116
1S1344	116
1S1345	125
1S1346	116
1S1347	125
1S1348	125
1S1349	506
1S1351	5832
1S1352	5834
1S1353	5836
1S1354	5838
1S1355	5842
1S1356	5846
1S1357	5848
1S1417	5999
1S1418	6003
1S1420H	177
1S1465	174
1S1472	117
1S1473	177
1S1500	610
1S1501	611
1S1502	611
1S1503	614
1S1514	177
1S1515	177

To Be Replaced	ECG Replacement
1S1516	177
1S1517	506
1S1517A	506
1S1532	177
1S1533	177
1S1544	177
1S1545	177
1S1553	177
1S1554	177
1S1555	177
1S1555FA-1	177
1S1555-S	177
1S1555TV	177
1S1555-TV	177
1S-1555V	177
1S1555-Z	177
1S1558	614
1S1575	5878
1S1576	5882
1S1577	5886
1S1578	5890
1S1579	178MP
1S1580	177
1S1582	610
1S1585	177
1S1586	177
1S1587	177
1S1588	519
1S1588V	519
1S1589	177
1S1614	6068
1S1615	6072
1S1621	177
1S1621-O	177
1S1621-R	177
1S1621-Y	177
1S1622	116
1S1623	116
1S1624	116
1S1625	116
1S1626	5866
1S1627	5868
1S1629	5846
1S1630	5848
1S1643R	6027
1S1644R	6031
1S1650	177
1S1651	177
1S1652	5944
1S1652R	5875
1S1653	5946
1S1653R	5877
1S1654	5986
1S1654R	5987
1S1655	5988
1S1655R	5989
1S1657	174
1S1658	614
1S1660	5834
1S1660R	5835
1S1661	5836
1S1661R	5837
1S1662	5854
1S1662R	5855
1S1663	5856
1S1663R	5857
1S1664	116
1S1665	117
1S1666	116
1S1668	116
1S1668F	116
1S1690	109
1S1691	116
1S1692	117
1S1693	116
1S1694	117
1S1695	125
1S1697	116
1S1698	116
1S1701	178MP
1S1715	137A
1S1717	5073A
1S1717L	139A
1S1718	139A
1S1718/4454C	140A
1S1722	112
1S1728	139A
1S1757	613
1S1758	613
1S1759	613
1S1805	611
1S1805A	611
1S1806	611
1S1806A	611
1S1825	177
1S1829	125
1S1832	506
1S1834	506
1S1835	506
1S1841	5990
1S1842	5994
1S1843	5998
1S1844	6002
1S1849	116
1S1849R	116(2)
1S1850	116
1S1850R	116(2)
1S1851	116
1S1851R	116
1S1855	506
1S1881AM	116
1S1882	506
1S1885	116
1S1885-3	116
1S1886	116

To Be Replaced	ECG Replacement
1S1887	125
1S1888	116
1S1890	5806
1S1891	156
1S1892	156
1S1893	610
1S1894	614
1S1895	612
1S1906	116
1S1920	506
1S1921A	506
1S1921B	506
1S1921C	506
1S1921D	506
1S1921E	506
1S1921F	506
1S1922	112
1S1923	611
1S1924	612
1S1925	112
1S1926	112
1S1926K	112
1S1941	116
1S1942	116
1S1943	116
1S1944	156
1S1951	147A
1S1953	177
1S1956	5070A
1S1957	5071A
1S1958	5072A
1S1959	139A
1S1960	140A
1S1961	5074A
1S1962	142A
1S1963	144A
1S1964	145A
1S1965	5075A
1S1966	5077A
1S1967	5079A
1S1968	5080A
1S1969	5081A
1S1970	146A
1S1971	5084A
1S1993	177
1S1994	177
1S1995	177
1S2011A	5074A
1S2030A	5065A
1S2031	5007A
1S2033	5005A
1S2033A	5066A
1S2036	5006A
1S2036A	134A
1S2039A	5067A
1S2039B	5007A
1S2043	5008A
1S2043A	5068A
1S2047	5009A
1S2047A	5069A
1S2047B	5009A
1S2051	5010A
1S2051A	5010A
1S2056	5011A
1S2056A	136A
1S2056B	5011A
1S2062	5013A
1S2062A	137A
1S2062B	5013A
1S2067	5017A
1S2068	5017A
1S2068A	5071A
1S2069	5017A
1S2074	519
1S2074H	177
1S2075	519
1S2075A	138A
1S2075A(Zener)	5015A
1S2075B(Zener)	5015A
1S2075K	519
1S2076	177
1S2076A	177
1S2076A-07	177
1S2076A-14	519
1S2076-TF1	519
1S2076-TFI	177
1S2078	177
1S2078K	177
1S2082	5016A
1S2082A	5072A
1S2085	612
1S2085A	612
1S2086	612
1S2086A	612
1S2087	612
1S2087A	612
1S2088	612
1S2088A	612
1S2089	611
1S2090	610
1S2091	177
1S2091A	139A
1S2091-BK	177
1S2091-BL	177
1S2091(Diode)	177
1S2091-W	177
1S2091(Zener)	5018A
1S2092	177
1S2093	6408
1S2094	611
1S2097	177
1S2098	177
1S2100	5019A
1S2100A	140A
1S2110	5020A

To Be Replaced	ECG Replacement
1S2110A	5020A
1S2111A	136A
1S2112A	137A
1S2113A	5071A
1S2114A	138A
1S2115A	5072A
1S2116A	139A
1S2117	140A
1S2117A	140A
1S2118A	5074A
1S2119A	5021A
1S2120	5021A
1S2120A	142A
1S2121A	145A
1S2122A	5075A
1S2123A	5077A
1S2130	5022A
1S2130A	5022A
1S2130B	143A
1S2139	611
1S2139A	610
1S2139B	611
1S2139C	612
1S2142	611
1S2143	611
1S2144	177
1S2144A	177
1S-2144Z	177
1S2144Z	177
1S2147	610
1S2147A	612
1S2147B	612
1S2147C	612
1S2150	5024A
1S2150A	145A
1S2160A	5075A
1S2180	610
1S2180A	5077A
1S2186	610
1S2186GR	177
1S2187	112
1S2188	611
1S2197	614
1S2197A	614
1S2198	112
1S2200	5029A
1S2200A	5079A
1S2207	614
1S2207-9	611
1S2208	611
1S2209	611
1S2220	5030A
1S2220A	5080A
1S2230	116
1S2233	5806
1S2234	5808
1S2236	611
1S2239	610
1S2240	5031A
1S2240A	5081A
1S2267	612
1S2268	612
1S2270	5033A
1S2270A	146A
1S2276	177
1S2300	5035A
1S2300A	5084A
1S2306	506
1S2307	506
1S2308	506
1S2309	506
1S2310	116
1S2311	125
1S2312	125
1S2313	116
1S2314	125
1S2315	125
1S2330	5036A
1S2330A	147A
1S2336	611
1S2339	610
1S2339-C	610
1S2339C	611
1S2339-C	610
1S2339G	612
1S2340	611
1S2350	5804
1S2351	116
1S2352	116
1S2353	125
1S2354	125
1S2356	116
1S2357	116
1S2361	116
1S2362	116
1S2363	116
1S2364	125
1S2365	125
1S2367	116
1S2371	166
1S2371A	116(4)
1S2372	116
1S2373	116
1S2374	116
1S2375	116
1S2376	116
1S2377	156
1S2378	5834
1S2378R	5835
1S2379	5804
1S2380	5806
1S2401	116
1S2402	116
1S2403	125
1S2404	116

To Be Replaced	ECG Replacement
1S2405	125
1S2406	125
1S2408	5800
1S2409	156
1S2410	5802
1S2411	5803
1S2412	5804
1S2413	5805
1S2414	5806
1S2415	5800
1S2416	5801
1S2417	5802
1S2418	5803
1S2419	5804
1S2420	5805
1S2421	5806
1S2434	5870
1S2435	5872
1S2437	5876
1S2438	5878
1S2439	5880
1S2439R	5881
1S2446	5980
1S2447	5982
1S2448	5986
1S2449	5988
1S2451	5992
1S2460	177
1S2461	177
1S2462	116
1S2471	177
1S2472	519
1S-2472	519
1S2473	519
1S2473-1	519
1S2473H	519
1S2473HC	519
1S2473-I	519
1S2473I	519
1S2473K	519
1S2473T	177
1S2473TP	519
1S2473VE	519
1S2473VE1	519
1S2475	519
1S2476	519
1S2597	177
1S2606	116
1S2608	125
1S2610	125
1S2637	177
1S2638	611
1S2686	611
1S2687	612
1S2687AA	612
1S2687D	612
1S2687T	116
1S2688	614
1S2688AA	116
1S2688B	614
1S2688EA	613
1S2688EB	612
1S2688EP	613
1S2689	614
1S2692	610
1S2692B	177
1S2706	177
1S2711	506
1S2745	515
1S2756	506
1S2775FA-1	116
1S2787	611
1S2788	177
1S2788B	177
1S2789	611
1S2790	613
1S2790W	613
1S2790WT	613
1S3006	5071A
1S3007	138A
1S3007A	5121A
1S3008	5072A
1S3008A	5122A
1S3009	139A
1S3009A	5124A
1S3010	140A
1S3010A	5125A
1S3011	5074A
1S3011A	5126A
1S3012	142A
1S3012A	5127A
1S3013	143A
1S3013A	5128A
1S3015A	5130A
1S3016(5½)	5075A
1S3016A	5131A
1S3016R(Diode)	177
1S3016(Rect)	116
1S3016(Zener)	5075A
1S3018	5077A
1S3018A	5133A
1S3020	5079A
1S3020A	5135A
1S3022	5080A
1S3022A	5136A
1S3024	5081A
1S3024A	5137A
1S3027	146A
1S3027A	5139A
1S3030	5084A
1S3030A	5141A
1S3033	147A
1S3033A	5142A
1S3036	5085A
1S3036A	5143A

To Be Replaced	ECG Replacement
1S3039	5086A
1S3039A	5144A
1S3043	5087A
1S3043A	5145A
1S3047	5088A
1S3047A	5146A
1S3051	5089A
1S3051A	5147A
1S3056	5090A
1S3056A	5148A
1S3062	149A
1S3062A	5150A
1S3068	5092A
1S3068A	5151A
1S3075	5093A
1S3075A	5152A
1S3076	177
1S3082	150A
1S3091	5095A
1S3100	5096A
1S3110	151A
1S3120	5097A
1S3130	5098A
1S3150	5100A
1S3160	5101A
1S3180	5103A
1S3200	5105A
1S3305	5010A
1S3332	5071A
1S3585	109
1S4006	5120A
1S4006A	5120A
1S4007	5121A
1S4007A	5121A
1S4008	5122A
1S4008A	5122A
1S4009	5124A
1S4009A	5124A
1S4010	5125A
1S4010A	5125A
1S4011	5126A
1S4011A	5126A
1S4012	5127A
1S4012A	5127A
1S4013	5128A
1S4013A	5128A
1S4015	5130A
1S4015A	5130A
1S4016	5131A
1S4016A	5131A
1S4018	5133A
1S4018A	5133A
1S4020	5135A
1S4020A	5135A
1S4022	5136A
1S4022A	5136A
1S4024	5137A
1S4024A	5137A
1S4027	5139A
1S4027A	5139A
1S4030	5141A
1S4030A	5141A
1S4033	5142A
1S4033A	5142A
1S4036	5143A
1S4036A	5143A
1S4039	5144A
1S4039A	5144A
1S4043	5145A
1S4043A	5145A
1S4047	5146A
1S4047A	5146A
1S4051	5147A
1S4051A	5147A
1S4056	5148A
1S4056A	5148A
1S4062	5150A
1S4062A	5150A
1S4068	5151A
1S4068A	5151A
1S4075	5152A
1S4075A	5152A
1S4082	5153A
1S4082A	5153A
1S4091	5155A
1S4091A	5155A
1S4100	5156A
1S4100A	5156A
1S4110	5157A
1S4110A	5157A
1S4120	5158A
1S4120A	5158A
1S4130	5159A
1S4130A	5159A
1S4150	5161A
1S4150A	5161A
1S4160	5162A
1S4160A	5162A
1S4180	5164A
1S4180A	5164A
1S4200	5166A
1S4200A	5166A
1S4266FM	109
1S4735	5010A
1S5006A	5181A
1S5007A	5182A
1S5008A	5183A
1S5009A	5185A
1S5010A	5186A
1S5011A	5187A
1S5012A	5188A
1S5013A	5189A
1S5015	5191A
1S5015A	5191A
1S5016	5192A

To Be Replaced	ECG Replacement
1S5016A	5192A
1S5018	5194A
1S5018A	5194A
1S5020	5196A
1S5020A	5196A
1S5022	5197A
1S5022A	5197A
1S5024	5198A
1S5024A	5198A
1S5027	5200A
1S5027A	5200A
1S5030	5202A
1S5030A	5202A
1S5033	5203A
1S5033A	5203A
1S5036	5204A
1S5036A	5204A
1S5039	5205A
1S5039A	5205A
1S5043	5206A
1S5043A	5206A
1S5047	5208A
1S5047A	5208A
1S5051	5210A
1S5051A	5210A
1S5056	5212A
1S5056A	5212A
1S5062	5214A
1S5062A	5214A
1S5068	5215A
1S5068A	5215A
1S5075	5216A
1S5075A	5216A
1S5082	5217A
1S5082A	5217A
1S5091	5219A
1S5091A	5219A
1S5100	5220A
1S5100A	5220A
1S5110	5222A
1S5110A	5222A
1S5120	5223A
1S5120A	5223A
1S5130	5224A
1S5130A	5224A
1S5150	5226A
1S5150A	5226A
1S5160A	5227A
1S5200A	5232A
1S5454	109
1S6006	5181A
1S6006A	5181A
1S6007	5182A
1S6007A	5182A
1S6008	5183A
1S6008A	5183A
1S6009A	5185A
1S6010	5186A
1S6010A	5186A
1S6011	5187A
1S6011A	5187A
1S6012	5188A
1S6012A	5188A
1S6013	5189A
1S6013A	5189A
1S6015	5191A
1S6015A	5191A
1S6016	5192A
1S6016A	5192A
1S6018	5194A
1S6018A	5194A
1S6020	5196A
1S6020A	5196A
1S6022	5197A
1S6022A	5197A
1S6024	5198A
1S6024A	5198A
1S6027	5200A
1S6027A	5200A
1S6030	5202A
1S6030A	5202A
1S6033	5203A
1S6033A	5203A
1S6036	5204A
1S6036A	5204A
1S6039	5205A
1S6039A	5205A
1S6043	5206A
1S6043A	5206A
1S6047	5208A
1S6047A	5208A
1S6051	5210A
1S6051A	5210A
1S6056	5212A
1S6056A	5212A
1S6062	5214A
1S6062A	5214A
1S6068	5215A
1S6068A	5215A
1S6075	5216A
1S6075A	5216A
1S6082	5217A
1S6082A	5217A
1S6091	5219A
1S6091A	5219A
1S6100	5220A
1S6100A	5220A
1S6110	5222A
1S6110A	5222A
1S6120	5223A
1S6120A	5223A
1S6130	5224A
1S6130A	5224A
1S6150	5226A
1S6150A	5226A

To Be Replaced	ECG Replacement
1S6160	5227A
1S6160A	5227A
1S6180	5230A
1S6180A	5230A
1S6200	5232A
1S6200A	5232A
1S7030A	5004A
1S7033	5005A
1S7033A	5005A
1S7033B	5005A
1S7036	5006A
1S7036A	5006A
1S7036B	5006A
1S7039	5007A
1S7039A	5007A
1S7039B	5007A
1S7043	5008A
1S7043A	5008A
1S7043B	5008A
1S7047	5009A
1S7047A	5009A
1S7047B	5009A
1S7051	5010A
1S7051A	5010A
1S7051B	5010A
1S7056	5011A
1S7056A	5011A
1S7056B	5011A
1S7062	5013A
1S7062A	5013A
1S7062B	5013A
1S7068	5014A
1S7068A	5014A
1S7068B	5014A
1S7075	5015A
1S7075A	5015A
1S7075B	5015A
1S7082	5016A
1S7082A	5016A
1S7082B	5016A
1S7091	5018A
1S7091A	5018A
1S7091B	5018A
1S7100	5019A
1S7100A	5019A
1S7100B	5019A
1S7110	5020A
1S7110A	5020A
1S7110B	5020A
1S7120	5021A
1S7120A	5021A
1S7120B	5021A
1S7150	5024A
1S7150A	5024A
1S7150B	5024A
1S7160A	5025A
1S9413	116
1S11941	177
1S15551	177
1S16009	5185A
1S16009A	5185A
1S17176	138A
1S19413	116
1S20751C	177
1S-M2511-8010S-035B	519
1SB01-02	116
1SB50S	614
1SB69-06	612
1SC2367	177
1SD2	116
1SD-2	116
1SIZ09	116
1SL211	601
1SL1885	116
1SO30	116
1SO31	116
1SO32	116
1SO34	116
1SO36	116
1SO38	125
1SO54	116
1SO58	125
1SR1K	116
1SS16	112
1SS53	177
1SS54	116
1SS81	614
1SS85	177
1SV50	614
1SV50-K	614
1SV50K	610
1SV53	614
1SV55	614
1SV68	614
1SV69-06	612
1SV70-06	612
1SV77	611
1T06	56004
1T08	56004
1T010	56004
1T015	56004
1T2C1	116(2)
1T2Z1	116(2)
1T5.6	136A
1T5.6B	136A
1T6.2	137A
1T6.2B	137A
1T7.5	138A
1T7.5B	138A
1T9.1	139A
1T9.1B	139A
1T10	140A
1T10B	140A
1T11.5	141A
1T11.5B	141A

To Be Replaced	ECG Replacement
1T12	142A
1T12B	142A
1T12.8	143A
1T12.8B	143A
1T13	112
1T13A	112
1T13B	112
1T14	144A
1T14B	144A
1T15	145A
1T15B	145A
1T16	56004
1T18(DIODE)	610
1T18(TRIAC)	56004
1T19-15B	145A
1T19-15D	145A
1T22	109
1T22A	109
1T22AJ	109
1T22B	109
1T22G	109
1T23	109
1T23A	109
1T23B	109
1T23G	109
1T23J	109
1T23M	109
1T23S	110
1T26	56004
1T26-2	109
1T26(Diode)	109
1T26(Triac)	56004
1T27	146A
1T27B	146A
1T28	56004
1T33	147A
1T33B	147A
1T36	56006
1T38	56006
1T40	177
1T46	56006
1T48	56006
1T55	148A
1T55B	148A
1T56	56008
1T58	56008
1T62	149A
1T62B	149A
1T66	56008
1T68	56008
1T76	56010
1T78	56010
1T82	150A
1T82B	150A
1T86	56010
1T88	56010
1T110	56004
1T110B	151A
1T110(Triac)	56004
1T110(Zener)	151A
1T115	56004
1T188	109
1T210	56004
1T213	109
1T215	56004
1T231	109
1T236	109
1T240	109
1T240A	109
1T243	177
1T243M	139A
1T261	109
1T262	109
1T262J	109
1T263	5089A
1T264	5089A
1T310	56006
1T315	56006
1T378	116
1T410	56006
1T415	56006
1T495	158
1T501	116
1T502	116
1T503	116
1T504	116
1T505	116
1T506	116
1T507	125
1T508	125
1T509	125
1T510	56008
1T510(Diode)	125
1T510(Rectifier)	125
1T510(Triac)	56008
1T515	56008
1T610	56008
1T615	56008
1T710	56010
1T715	56010
1T810	56010
1T815	56010
1T1331	110MP
1T2011	116
1T2012	116
1T2013	116
1T2014	116
1T2015	116
1T2016	116
1TA5.6	136A
1TA5.6A	136A
1TA6.2	137A
1TA6.2A	137A
1TA7.5	138A
1TA7.5A	138A

To Be Replaced	ECG Replacement
1TA9.1	139A
1TA9.1A	139A
1TA10	140A
1TA10A	140A
1TA11.5	141A
1TA11.5A	141A
1TA12	142A
1TA12A	142A
1TA12.8	143A
1TA12.8A	143A
1TA14	144A
1TA14A	144A
1TA15	145A
1TA15A	145A
1TA27	146A
1TA27A	146A
1TA33	147A
1TA33A	147A
1TA55	148A
1TA55A	148A
1TA62	149A
1TA62A	149A
1TA82	150A
1TA82A	150A
1TA110	151A
1TA110A	151A
1TB06	116
1-TR-046	108
1-TR-048	107
1-TR-111	102A
1-TR-112	103A
1TS05	116
1TT310	614
1TT1330	747
1TT1352	749
1TT1358	712
1TT1364	783
1TT3064C	780
1TT3064(D.I.P.)	783
1TT3064(Metalcan)	780
1TT3064P	783
1TT3065	712
1TT3065P	712
1TT9112	9112
1TV24237	120
1U585F	123A
1U585F/7825B	123A
1V3074A20	116
1V3074A21	116
1V9002	109
1V68611A47	159
1V68611A47A	159
1VA10	116
1W01-08J	5074A
1W8358	123A
1W8537	159
1W8995A	128
1W9148	159
1W9640	159
1W9640A	159
1W9723	123A
1W9728	159
1W9728A	159
1W9782	159
1W9782A	159
1W9787	123A
1W9810	159
1W9810A	159
1W9810S	159
1W9810SA	159
1W11700	159
1W11700A	159
1W11702	159
1W11702A	159
1W11706	133
1W11711	159
1WM6	116
1WS1	156
1WS2	156
1WS4	5804
1WS6	5806
1WS8	156
1WS10	156
1X0001PA	1187
1X00017TA	712
1X0017TAZZ	712
1X60	109
1X9179	177
1X9805	177
1X9809	177
1Z3.3	5065A
1Z3.3A	5066A
1Z3.3T5	5066A
1Z3.3T10.5	5066A
1Z3.6	134A
1Z3.6A	134A
1Z3.6T5	134A
1Z3.9	5067A
1Z3.9A	5067A
1Z3.9T5	5067A
1Z4.3	5068A
1Z4.3A	5068A
1Z4.3T5	5068A
1Z4.7	5069A
1Z4.7A	5069A
1Z4.7T5	5069A
1Z5.1	135A
1Z5.1A	135A
1Z5.1T5	5116A
1Z5.1T10	135A
1Z5.6	136A
1Z5.6A	136A
1Z5.6T5	136A
1Z6.2	137A
1Z6.2A	137A

To Be Replaced	ECG Replacement
1Z6.2T5	137A
1Z6.2T10	137A
1Z6.8	5071A
1Z6.8A	5071A
1Z6.8T5	5071A
1Z7.5	138A
1Z7.5A	138A
1Z7.5T5	138A
1Z8.2	5072A
1Z8.2A	5072A
1Z8.2T5	5072A
1Z8.2T10	5072A
1Z8.2T20	5072A
1Z9	139A
1Z9.1	139A
1Z9.1A	139A
1Z9.1B	139A
1Z9.1C	139A
1Z9.1D5	139A
1Z9.1D10	139A
1Z9.1T5	139A
1Z9.1T10	139A
1Z9.1T20	139A
1Z10	140A
1Z10A	140A
1Z10T5	140A
1Z10T10	140A
1Z10T20	140A
1Z11	5074A
1Z11A	5074A
1Z11T5	5074A
1Z11T10	5074A
1Z11T20	5074A
1Z12	142A
1Z12A	142A
1Z12B	142A
1Z12C	142A
1Z12T5	142A
1Z12T10	142A
1Z12T20	142A
1Z13	143A
1Z13A	143A
1Z13T5	143A
1Z13T10	143A
1Z13T20	143A
1Z15	145A
1Z15A	145A
1Z15B	145A
1Z15C	145A
1Z15D	145A
1Z15D5	145A
1Z15D10	145A
1Z15T5	145A
1Z15T10	145A
1Z15T20	145A
1Z16	5075A
1Z16A	5075A
1Z16T5	5075A
1Z16T10	5075A
1Z16T20	5075A
1Z18	5077A
1Z18A	5077A
1Z18T5	5077A
1Z18T10	5077A
1Z18T20	5077A
1Z20	5079A
1Z20A	5079A
1Z20T5	5079A
1Z20T10	5079A
1Z20T20	5079A
1Z22	5080A
1Z22A	5080A
1Z22T5	5080A
1Z22T10	5080A
1Z22T20	5080A
1Z24	5081A
1Z24A	5081A
1Z24T5	5081A
1Z24T10	5081A
1Z24T20	5081A
1Z27	146A
1Z27A	146A
1Z27B	146A
1Z27C	146A
1Z27D	146A
1Z27D5	146A
1Z27D10	146A
1Z27T5	146A
1Z27T10	146A
1Z27T20	146A
1Z30	5084A
1Z30A	5084A
1Z30T5	5084A
1Z30T10	5084A
1Z30T20	5084A
1Z33	147A
1Z33A	147A
1Z33B	147A
1Z33C	147A
1Z33D	147A
1Z33D5	147A
1Z33D10	147A
1Z33T5	147A
1Z33T10	147A
1Z33T20	147A
1Z33.6A	134A
1Z36	5085A
1Z36A	5085A
1Z39	5086A
1Z39A	5086A
1Z43	5087A
1Z43A	5087A
1Z47	5088A
1Z47A	5088A
1Z51	5089A

To Be Replaced	ECG Replacement
1Z51A	5089A
1Z55	148A
1Z55A	148A
1Z55B	148A
1Z56	5090A
1Z56A	5090A
1Z62	149A
1Z62A	149A
1Z62B	149A
1Z62C	149A
1Z62D	149A
1Z62D5	149A
1Z62D10	149A
1Z68	5092A
1Z68A	5092A
1Z75	5093A
1Z75A	5093A
1Z82	150A
1Z82A	150A
1Z82B	150A
1Z82C	150A
1Z82D	150A
1Z82D5	150A
1Z82D10	150A
1Z91	5095A
1Z91A	5095A
1Z100	5096A
1Z100A	5096A
1Z110	151A
1Z110A	151A
1Z110B	151A
1Z110C	151A
1Z110D	151A
1Z110D5	151A
1Z110D10	151A
1ZB12	142A
1ZB12B	142A
1ZB15	145A
1ZB15B	145A
1ZB27	146A
1ZB27B	146A
1ZB33	147A
1ZB33B	147A
1ZB82	150A
1ZB82B	150A
1ZC3.3T5	5066A
1ZC3.6	134A
1ZC3.6T5	134A
1ZC3.9T5	5067A
1ZC4.3T5	5068A
1ZC4.3T10.5	5068A
1ZC4.7T5	5069A
1ZC5.1	135A
1ZC5.1T5	5116A
1ZC5.6	136A
1ZC5.6T5	136A
1ZC5.6T10.5	136A
1ZC6.2	137A
1ZC6.2T5	137A
1ZC6.8T5	5071A
1ZC7.5T5	138A
1ZC8.2T5	5072A
1ZC8.2T10	5072A
1ZC8.2T20	5072A
1ZC9.1	139A
1ZC9.1T5	139A
1ZC9.1T10	139A
1ZC10T5	140A
1ZC11T5	5074A
1ZC11T10	5074A
1ZC12	142A
1ZC12T5	142A
1ZC12T10	142A
1ZC12T20	142A
1ZC13T5	143A
1ZC13T10	143A
1ZC15	145A
1ZC15T5	145A
1ZC15T10	145A
1ZC16T5	5075A
1ZC16T10	5075A
1ZC18T5	5077A
1ZC18T10	5077A
1ZC20T5	5079A
1ZC20T10	5079A
1ZC22T5	5080A
1ZC22T10	5080A
1ZC24T5	5081A
1ZC24T10	5081A
1ZC27	146A
1ZC27T5	146A
1ZC27T10	146A
1ZC30T5	5084A
1ZC30T10	5084A
1ZCT10	140A
1ZD120	5097A
1ZD825	5072A
1ZF5.1T5	135A
1ZF5.1T10	135A
1ZF5.1T20	135A
1ZF5.6T5	136A
1ZF5.6T10	136A
1ZF5.6T20	136A
1ZF9.1T5	139A
1ZF9.1T10	139A
1ZF9.1T20	139A
1ZF12T10	142A
1ZF12T20	142A
1ZF14T5	144A
1ZF14T10	144A
1ZF14T20	144A
1ZF15T5	145A
1ZF15T10	145A
1ZF15T20	145A
1ZF27T5	146A

To Be Replaced	ECG Replacement
1ZF27T10	146A
1ZF27T20	146A
1ZF33T5	147A
1ZF33T10	147A
1ZF33T20	147A
1ZM3.3T5	5066A
1ZM3.6T5	134A
1ZM3.6T10	134A
1ZM3.6T20	134A
1ZM3.9T5	5067A
1ZM4.7T5	5069A
1ZM5.1T5	5116A
1ZM5.1T10	135A
1ZM5.1T20	135A
1ZM5.6T5	136A
1ZM5.6T10	136A
1ZM5.6T20	136A
1ZM6.2	137A
1ZM6.2T5	137A
1ZM6.2T10	137A
1ZM6.2T20	137A
1ZM6.8T5	5071A
1ZM7.5T5	138A
1ZM7.5T10	138A
1ZM7.5T20	138A
1ZM8.2T5	5072A
1ZM9.1T5	139A
1ZM9.1T10	139A
1ZM9.1T20	139A
1ZM10T5	140A
1ZM10T10	140A
1ZM10T20	140A
1ZM12T5	142A
1ZM12T10	142A
1ZM12T20	142A
1ZM13T5	143A
1ZM15T5	145A
1ZM15T10	145A
1ZM15T20	145A
1ZM16T5	5075A
1ZM18T5	5077A
1ZM20T5	5079A
1ZM22T5	5080A
1ZM24T5	5081A
1ZM27T5	146A
1ZM30T5	5084A
1ZM33T5	147A
1ZM36T5	5085A
1ZM39T5	5086A
1ZM43T5	5087A
1ZM47T5	5088A
1ZM51T5	5089A
1ZM56T5	5090A
1ZM62T5	149A
1ZM68T5	5092A
1ZM75T5	5093A
1ZM82T5	150A
1ZM91T5	5095A
1ZM100T5	5096A
1ZM110T5	151A
1ZM120T5	5097A
1ZM130T5	5098A
1ZM150T5	5100A
1ZM160T5	5101A
1ZM180T5	5103A
1ZM200T5	5105A
1ZS3.9A	5068A
1ZS4.3A	5069A
1ZS4.7A	5116A
1ZS5.1A	136A
1ZS5.6A	137A
1ZS6.2A	5071A
1ZS6.8A	138A
1ZS7.5A	5072A
1ZS8.2A	139A
1ZS9.1A	139A
1ZS10A	140A
1ZS11A	5074A
1ZS12A	142A
1ZS13A	143A
1ZS15A	145A
1ZS16A	5075A
1ZS18A	5077A
1ZS20A	5079A
1ZS22A	5080A
1ZS24A	5081A
1ZS27A	146A
1ZS30A	5084A
1ZS33A	147A
1ZS36A	5085A
1ZS39A	5086A
1ZS43A	5087A
1ZS47A	5088A
1ZS51A	5089A
1ZS56A	5090A
1ZS62A	149A
1ZS68B	5092A
1ZS75A	5093A
1ZS82A	150A
1ZS91A	5095A
1ZS100A	5096A
1ZS110A	151A
1ZS120A	5097A
1ZS130A	5098A
1ZS150A	5100A
1ZS160A	5101A
1ZS180A	5103A
1ZS200A	5105A
1ZT12	142A
1ZT12B	142A
1ZT15	145A
1ZT15B	145A
1ZT27	146A
1ZT27B	146A
1ZT33	147A

To Be Replaced	ECG Replacement
1ZT33B	147A
1ZT82	150A
1ZT82B	150A
1ZT110A	151A
1ZT120A	5097A
1ZT130A	5098A
1ZT150A	5100A
1ZT160A	5101A
1ZT180A	5103A
1ZT200A	5105A
31.32	5074A
1.5B05	156
1.5BZ100D	5156A
1.5BZ110B	5157A
1.5BZ120	5158A
1.5BZ120C	5158A
1.5BZ130D	5159A
1.5BZ140B	5160A
1.5BZ150	5161A
1.5BZ150C	5161A
1.5C05	156
1.5DKZ6.8	5120A
1.5DKZ6.8A	5120A
1.5DKZ6.8B	5120A
1.5DKZ7.5	5121A
1.5DKZ7.5A	5121A
1.5DKZ8.2	5122A
1.5DKZ8.2A	5122A
1.5DKZ8.2B	5122A
1.5DKZ9.1	5124A
1.5DKZ9.1A	5124A
1.5DKZ9.1B	5124A
1.5DKZ10	5125A
1.5DKZ10A	5125A
1.5DKZ10B	5125A
1.5DKZ11	5126A
1.5DKZ11A	5126A
1.5DKZ11B	5126A
1.5DKZ12	5127A
1.5DKZ12A	5127A
1.5DKZ12B	5127A
1.5DKZ13	5128A
1.5DKZ13A	5128A
1.5DKZ13B	5128A
1.5DKZ15	5130A
1.5DKZ15A	5130A
1.5DKZ15B	5130A
1.5DKZ16	5131A
1.5DKZ16A	5131A
1.5DKZ16B	5131A
1.5DKZ18	5133A
1.5DKZ18A	5133A
1.5DKZ18B	5133A
1.5DKZ20	5135A
1.5DKZ20A	5135A
1.5DKZ20B	5135A
1.5DKZ22	5136A
1.5DKZ22A	5136A
1.5DKZ22B	5136A
1.5DKZ24	5137A
1.5DKZ24A	5137A
1.5DKZ24B	5137A
1.5DKZ27	5139A
1.5DKZ27A	5139A
1.5DKZ27B	5139A
1.5DKZ30	5141A
1.5DKZ30A	5141A
1.5DKZ30B	5141A
1.5DKZ33	5142A
1.5DKZ33A	5142A
1.5DKZ33B	5142A
1.5DKZ36	5143A
1.5DKZ36A	5143A
1.5DKZ36B	5143A
1.5DKZ39	5144A
1.5DKZ39A	5144A
1.5DKZ39B	5144A
1.5DKZ43	5145A
1.5DKZ43A	5145A
1.5DKZ43B	5145A
1.5DKZ47	5146A
1.5DKZ47A	5146A
1.5DKZ47B	5146A
1.5DKZ51	5147A
1.5DKZ51A	5147A
1.5DKZ51B	5147A
1.5DKZ56	5148A
1.5DKZ56A	5148A
1.5DKZ56B	5148A
1.5DKZ62	5150A
1.5DKZ62A	5150A
1.5DKZ62B	5150A
1.5DKZ68	5151A
1.5DKZ68A	5151A
1.5DKZ68B	5151A
1.5DKZ75	5152A
1.5DKZ75A	5152A
1.5DKZ75B	5152A
1.5E05	5800
1.5E1	5801
1.5E2	5802
1.5E4	5804
1.5E5	5805
1.5E6	5806
1.5E12	506
1.5E140	5160A
1.5J05	5800
1.5J1	5801
1.5J2	5802
1.5J3	5803
1.5J4	5804
1.5J5	5805
1.5J6	5806
1.5J12	506
1.5JZ6.8	5120A

To Be Replaced	ECG Replacement
1.5JZ6.8A	5120A
1.5JZ6.8B	5120A
1.5JZ6.8C	5120A
1.5JZ6.8D	5120A
1.5JZ7.5	5121A
1.5JZ7.5A	5121A
1.5JZ7.5B	5121A
1.5JZ7.5C	5121A
1.5JZ7.5D	5121A
1.5JZ8.2	5122A
1.5JZ8.2A	5122A
1.5JZ8.2B	5122A
1.5JZ8.2C	5122A
1.5JZ8.2D	5122A
1.5JZ9.1	5124A
1.5JZ9.1A	5124A
1.5JZ9.1B	5124A
1.5JZ9.1C	5124A
1.5JZ9.1D	5124A
1.5JZ10	5125A
1.5JZ10A	5125A
1.5JZ10B	5125A
1.5JZ10C	5125A
1.5JZ10D	5125A
1.5JZ11	5126A
1.5JZ11A	5126A
1.5JZ11B	5126A
1.5JZ11C	5126A
1.5JZ11D	5126A
1.5JZ12	5127A
1.5JZ12A	5127A
1.5JZ12B	5127A
1.5JZ12C	5127A
1.5JZ12D	5127A
1.5JZ13	5128A
1.5JZ13A	5128A
1.5JZ13B	5128A
1.5JZ13C	5128A
1.5JZ13D	5128A
1.5JZ14	5129A
1.5JZ14A	5129A
1.5JZ14B	5129A
1.5JZ14C	5129A
1.5JZ14D	5129A
1.5JZ15	5130A
1.5JZ15A	5130A
1.5JZ15B	5130A
1.5JZ15C	5130A
1.5JZ15D	5130A
1.5JZ16	5131A
1.5JZ16A	5131A
1.5JZ16B	5131A
1.5JZ16C	5131A
1.5JZ16D	5131A
1.5JZ17	5132A
1.5JZ17A	5132A
1.5JZ17B	5132A
1.5JZ17C	5132A
1.5JZ17D	5132A
1.5JZ18	5133A
1.5JZ18A	5133A
1.5JZ18B	5133A
1.5JZ18C	5133A
1.5JZ18D	5133A
1.5JZ19	5134A
1.5JZ19A	5134A
1.5JZ19B	5134A
1.5JZ19C	5134A
1.5JZ19D	5134A
1.5JZ20	5135A
1.5JZ20A	5135A
1.5JZ20B	5135A
1.5JZ20C	5135A
1.5JZ20D	5135A
1.5JZ22	5136A
1.5JZ22A	5136A
1.5JZ22B	5136A
1.5JZ22C	5136A
1.5JZ22D	5136A
1.5JZ24	5137A
1.5JZ24A	5137A
1.5JZ24B	5137A
1.5JZ24C	5137A
1.5JZ24D	5137A
1.5JZ25	5138A
1.5JZ25A	5138A
1.5JZ25B	5138A
1.5JZ25D	5138A
1.5JZ27	5139A
1.5JZ27A	5139A
1.5JZ27B	5139A
1.5JZ27C	5139A
1.5JZ27D	5139A
1.5JZ30	5141A
1.5JZ30A	5141A
1.5JZ30B	5141A
1.5JZ30C	5141A
1.5JZ30D	5141A
1.5JZ33	5142A
1.5JZ33A	5142A
1.5JZ33B	5142A
1.5JZ33C	5142A
1.5JZ33D	5142A
1.5JZ36	5143A
1.5JZ36A	5143A
1.5JZ36B	5143A
1.5JZ36C	5143A
1.5JZ36D	5143A
1.5JZ39	5144A
1.5JZ39A	5144A
1.5JZ39B	5144A
1.5JZ39C	5144A
1.5JZ39D	5144A
1.5JZ43	5145A
1.5JZ43A	5145A

To Be Replaced	ECG Replacement
1.5JZ43B	5145A
1.5JZ43C	5145A
1.5JZ43D	5145A
1.5JZ47	5146A
1.5JZ47A	5146A
1.5JZ47B	5146A
1.5JZ47C	5146A
1.5JZ47D	5146A
1.5JZ51	5147A
1.5JZ51A	5147A
1.5JZ51B	5147A
1.5JZ51C	5147A
1.5JZ51D	5147A
1.5JZ56	5148A
1.5JZ56A	5148A
1.5JZ56B	5148A
1.5JZ56C	5148A
1.5JZ56D	5148A
1.5JZ62	5150A
1.5JZ62A	5150A
1.5JZ62B	5150A
1.5JZ62C	5150A
1.5JZ62D	5150A
1.5JZ68	5151A
1.5JZ68A	5151A
1.5JZ68B	5151A
1.5JZ68C	5151A
1.5JZ75	5152A
1.5JZ75A	5152A
1.5JZ75B	5152A
1.5JZ75C	5152A
1.5JZ75D	5152A
1.5JZ82	5153A
1.5JZ82A	5153A
1.5JZ82B	5153A
1.5JZ82C	5153A
1.5JZ82D	5153A
1.5JZ91	5155A
1.5JZ91A	5155A
1.5JZ91B	5155A
1.5JZ91C	5155A
1.5JZ91D	5155A
1.5JZ100	5156A
1.5JZ100A	5156A
1.5JZ100B	5156A
1.5JZ100C	5156A
1.5JZ110	5157A
1.5JZ110A	5157A
1.5JZ110C	5157A
1.5JZ110D	5157A
1.5JZ120A	5158A
1.5JZ120B	5158A
1.5JZ120D	5158A
1.5JZ130	5159A
1.5JZ130A	5159A
1.5JZ130B	5159A
1.5JZ130C	5159A
1.5JZ140	5160A
1.5JZ140A	5160A
1.5JZ140C	5160A
1.5JZ140D	5160A
1.5JZ150A	5161A
1.5JZ150B	5161A
1.5JZ150D	5161A
1.5JZ160	5162A
1.5JZ160B	5162A
1.5JZ160C	5162A
1.5JZ160D	5162A
1.5JZ200	5166A
1.5JZ200A	5166A
1.5JZ200B	5166A
1.5JZ200C	5166A
1.5JZ200D	5166A
1.5M14Z	5129A
1.5M14Z10	5129A
1.5M17Z	5132A
1.5M17Z10	5132A
1.5M19Z	5134A
1.5M19Z10	5134A
1.5M25Z	5138A
1.5M25Z10	5138A
1.5M30Z	5141A
1.5M51Z	5147A
1.5M100Z	5156A
1.5M140Z	5160A
1.5R8.2	5122A
1.5R8.2A	5122A
1.5R8.2B	5122A
1.5R9.1	5124A
1.5R9.1A	5124A
1.5R9.1B	5124A
1.5R10	5125A
1.5R10A	5125A
1.5R10B	5125A
1.5R11	5126A
1.5R11A	5126A
1.5R11B	5126A
1.5R12	5127A
1.5R12A	5127A
1.5R12B	5127A
1.5R13	5128A
1.5R13A	5128A
1.5R13B	5128A
1.5R15	5130A
1.5R15A	5130A
1.5R15B	5130A
1.5R16	5131A
1.5R16A	5131A
1.5R16B	5131A
1.5R18	5133A
1.5R18A	5133A
1.5R18B	5133A
1.5R20	5135A
1.5R20A	5135A

To Be Replaced	ECG Replacement
1.5R20B	5135A
1.5R22	5136A
1.5R22A	5136A
1.5R22B	5136A
1.5R24	5137A
1.5R24A	5137A
1.5R24B	5137A
1.5R27	5139A
1.5R27A	5139A
1.5R27B	5139A
1.5R30	5141A
1.5R30A	5141A
1.5R30B	5141A
1.5R31	5144A
1.5R33	5142A
1.5R33A	5142A
1.5R33B	5142A
1.5R36	5143A
1.5R36A	5143A
1.5R36B	5143A
1.5R39A	5144A
1.5R39B	5144A
1.5R43	5145A
1.5R43A	5145A
1.5R43B	5145A
1.5R47	5146A
1.5R47A	5146A
1.5R47B	5146A
1.5R51	5147A
1.5R51A	5147A
1.5R51B	5147A
1.5R56	5148A
1.5R56A	5148A
1.5R56B	5148A
1.5R62	5150A
1.5R62A	5150A
1.5R62B	5150A
1.5R68	5151A
1.5R68A	5151A
1.5R68B	5151A
1.5R75B	5152A
1.5R91	5155A
1.5R91A	5155A
1.5R91B	5155A
1.5R100	5156A
1.5R100A	5156A
1.5R100B	5156A
1.5R110	5157A
1.5R110A	5157A
1.5R110B	5157A
1.5R120	5158A
1.5R120A	5158A
1.5R120B	5158A
1.5R130	5159A
1.5R130A	5159A
1.5R130B	5159A
1.5R140	5160A
1.5R140A	5160A
1.5R140B	5160A
1.5R150	5161A
1.5R150A	5161A
1.5R150B	5161A
1.5R160	5162A
1.5R160A	5162A
1.5R160B	5162A
1.5R180	5164A
1.5R180A	5164A
1.5R180B	5164A
1.5R200	5166A
1.5R200A	5166A
1.5R200B	5166A
1.5R1208	5158A
1.5Z6.8	5120A
1.5Z6.8A	5120A
1.5Z6.8B	5120A
1.5Z6.8C	5120A
1.5Z7.5	5121A
1.5Z7.5A	5121A
1.5Z7.5B	5121A
1.5Z7.5C	5121A
1.5Z7.5D	5121A
1.5Z8.2	5122A
1.5Z8.2A	5122A
1.5Z8.2B	5122A
1.5Z8.2C	5122A
1.5Z8.2D	5122A
1.5Z9.1	5124A
1.5Z9.1A	5124A
1.5Z9.1B	5124A
1.5Z9.1C	5124A
1.5Z9.1D	5124A
1.5Z10	5125A
1.5Z10A	5125A
1.5Z10B	5125A
1.5Z10C	5125A
1.5Z10D	5125A
1.5Z11	5126A
1.5Z11A	5126A
1.5Z11B	5126A
1.5Z11C	5126A
1.5Z11D	5126A
1.5Z12	5127A
1.5Z12A	5127A
1.5Z12B	5127A
1.5Z12C	5127A
1.5Z12D	5127A
1.5Z13	5128A
1.5Z13A	5128A
1.5Z13B	5128A
1.5Z13C	5128A
1.5Z13D	5128A
1.5Z14	5129A
1.5Z14A	5129A
1.5Z14B	5129A
1.5Z14C	5129A

To Be Replaced	ECG Replacement
1.5Z14D	5129A
1.5Z15	5130A
1.5Z15A	5130A
1.5Z15B	5130A
1.5Z15C	5130A
1.5Z16	5131A
1.5Z16A	5131A
1.5Z16B	5131A
1.5Z16C	5131A
1.5Z16D	5131A
1.5Z17	5132A
1.5Z17A	5132A
1.5Z17B	5132A
1.5Z17C	5132A
1.5Z17D	5132A
1.5Z18	5133A
1.5Z18A	5133A
1.5Z18B	5133A
1.5Z18C	5133A
1.5Z18D	5133A
1.5Z19	5134A
1.5Z19A	5134A
1.5Z19B	5134A
1.5Z19C	5134A
1.5Z19D	5134A
1.5Z20	5135A
1.5Z20A	5135A
1.5Z20B	5135A
1.5Z20C	5135A
1.5Z20D	5135A
1.5Z22	5136A
1.5Z22A	5136A
1.5Z22B	5136A
1.5Z22C	5136A
1.5Z22D	5136A
1.5Z24	5137A
1.5Z24A	5137A
1.5Z24B	5137A
1.5Z24C	5137A
1.5Z24D	5137A
1.5Z25B	5138A
1.5Z27	5139A
1.5Z27A	5139A
1.5Z27B	5139A
1.5Z27C	5139A
1.5Z27D	5139A
1.5Z30	5141A
1.5Z30A	5141A
1.5Z30B	5141A
1.5Z30C	5141A
1.5Z30D	5141A
1.5Z31C	5144A
1.5Z33	5142A
1.5Z33A	5142A
1.5Z33B	5142A
1.5Z33C	5142A
1.5Z33D	5142A
1.5Z36	5143A
1.5Z36A	5143A
1.5Z36B	5143A
1.5Z36C	5143A
1.5Z36D	5143A
1.5Z39	5144A
1.5Z39A	5144A
1.5Z39B	5144A
1.5Z39D	5144A
1.5Z43	5145A
1.5Z43A	5145A
1.5Z43B	5145A
1.5Z43C	5145A
1.5Z43D	5145A
1.5Z47	5146A
1.5Z47A	5146A
1.5Z47B	5146A
1.5Z47C	5146A
1.5Z47D	5146A
1.5Z51	5147A
1.5Z51A	5147A
1.5Z51B	5147A
1.5Z51C	5147A
1.5Z51D	5147A
1.5Z56	5148A
1.5Z56A	5148A
1.5Z56B	5148A
1.5Z56C	5148A
1.5Z56D	5148A
1.5Z62	5150A
1.5Z62A	5150A
1.5Z62B	5150A
1.5Z62C	5150A
1.5Z62D	5150A
1.5Z68	5151A
1.5Z68A	5151A
1.5Z68B	5151A
1.5Z68C	5151A
1.5Z68D	5151A
1.5Z75	5152A
1.5Z75A	5152A
1.5Z75B	5152A
1.5Z75C	5152A
1.5Z75D	5152A
1.5Z82	5153A
1.5Z82A	5153A
1.5Z82B	5153A
1.5Z82C	5153A
1.5Z82D	5153A
1.5Z91	5155A
1.5Z91A	5155A
1.5Z91B	5155A
1.5Z91C	5155A
1.5Z91D	5155A
1.5Z100	5156A
1.5Z100A	5156A
1.5Z100B	5156A
1.5Z100C	5156A

To Be Replaced	ECG Replacement
1.5Z100D	5156A
1.5Z110	5157A
1.5Z110A	5157A
1.5Z110B	5157A
1.5Z110C	5157A
1.5Z110D	5157A
1.5Z120	5158A
1.5Z120A	5158A
1.5Z120B	5158A
1.5Z120C	5158A
1.5Z120D	5158A
1.5Z130	5159A
1.5Z130A	5159A
1.5Z130B	5159A
1.5Z130C	5159A
1.5Z130D	5159A
1.5Z140	5160A
1.5Z140A	5160A
1.5Z140B	5160A
1.5Z140C	5160A
1.5Z140D	5160A
1.5Z150	5161A
1.5Z150A	5161A
1.5Z150B	5161A
1.5Z150C	5161A
1.5Z150D	5161A
1.5Z160	5162A
1.5Z160A	5162A
1.5Z160B	5162A
1.5Z160C	5162A
1.5Z160D	5162A
1.5Z180	5164A
1.5Z180A	5164A
1.5Z180B	5164A
1.5Z180C	5164A
1.5Z180D	5164A
1.5Z200	5166A
1.5Z200A	5166A
1.5Z200B	5166A
1.5Z200C	5166A
1.5Z200D	5166A
c1.516B	5131A
2-1K60	177
2-5SR	116
2-36	103
2-5004-6	5695
2-5004-14	5697
2-5184-11	5675
2-8454-031	123A
2 3172208	198
2-64701508	125
2A	126
2A12	129
2A18	5008A
2A21	5010A
2A22	5010A
2A25(ZENER)	5006A
2A28(ZENER)	5004A
2A30	156
2A43	5003A
2A44	5005A
2A47	5008A
2A64	5036A
2A100	156
2A119	110
2A200	156
2AA113	116(2)
2AA119	110MP
2AC187	176(2)
2AC188	158(2)
2AD140	121
2AD149	121MP
2AFR2PF	156
2AG	161
2AH	161
2AM-1	5452
2AT-16	503
2B	100
2B-2	506
2C	100
2C291(Transistor)	128
2CD198S	130
2CS900	123A
2CT204	222
2D	100
2D001	121
2D002	123A
2D002-41	123A
2D002-168	123A
2D002-169	123A
2D002-170	123A
2D002-171	123A
2D002-175	123A
2D004	121
2D-02	116
2D010	130
2D013	102A
2D013-13	102A
2D013-54	102A
2D013-109	102A
2D013-160	102A
2D015	121
2D016	102A
2D016-45	102A
2D016-54	102A
2D017	123A
2D017-165	159
2D017-166	159
2D017-167	159
2D017-169	159
2D020	194
2D020-173	194
2D020-174	194
2D021	102A
2D021-8	102A

To Be Replaced	ECG Replacement
2D021-11	102A
2D021-56	102A
2D022	6400
2D022-211	6400
2D023	102A
2D026	123A
2D026-274	123A
2D027	159
2D030	6400
2D031	133
2D033	123A
2D036	158
2D038	123A
2D039	158
2D7A	5096A
2D41	5400
2D165	177
2E	126
2E05	156
2E1	156
2E1A20A22AAB	128
2E2	156
2E4	116
2E6	156
2E8	156
2E10	156
2EM015	156
2EZ3.6D5	5112A
2EZ3.9D5	5113A
2EZ4.3D5	5114A
2EZ4.7D5	5115A
2EZ5.1D5	5116A
2EZ5.6D5	5117A
2EZ6.2D5	5119A
2EZ6.8D5	5120A
2EZ7.5D5	5121A
2EZ8.2D5	5122A
2EZ9.1D5	5124A
2EZ10D5	5125A
2EZ11D5	5126A
2EZ12D5	5127A
2EZ13D5	5128A
2EZ14D5	5129A
2EZ15D5	5130A
2EZ15DE	5130A
2EZ16D5	5131A
2EZ17D5	5132A
2EZ18D5	5133A
2EZ19D5	5134A
2EZ20D5	5135A
2EZ22D5	5136A
2EZ24D	5137A
2EZ27D5	5139A
2EZ30D5	5141A
2EZ33D5	5142A
2EZ36D5	5143A
2EZ39DF	5144A
2EZ43D5	5145A
2EZ47D5	5146A
2EZ51D5	5147A
2EZ56D5	5148A
2EZ62D5	5150A
2EZ68D5	5151A
2EZ75D5	5152A
2EZ91D5	5155A
2EZ100D5	5156A
2EZ110D5	5157A
2EZ120D5	5158A
2EZ130D5	5159A
2EZ140D5	5160A
2EZ150D5	5161A
2EZ160D5	5162A
2EZ170D5	5163A
2EZ180D5	5164A
2EZ200D5	5166A
2F	160
2F05	5800
2F2CN1	156
2F2CN5	156
2F4	116
2FB050	5304
2FB100	5304
2FB200	5304
2FB400	5304
2FB600	5305
2FB800	5306
2FB1000	5307
2G	126
2G8	116
2G13	116
2G101	160
2G102	160
2G103	160
2G104	160
2G106	160
2G108	160
2G109	160
2G110	160
2G138	100
2G139	100
2G140	100
2G201	160
2G202	160
2G210	121
2G220	121
2G222	121
2G223	104
2G224	121
2G225	121
2G226	179
2G227	179
2G228	179
2G240	121
2G270	102
2G271	102

To Be Replaced	ECG Replacement
2G301	160
2G302	102
2G303	102A
2G304	102A
2G306	102
2G308	102A
2G309	102A
2G319	100
2G320	100
2G321	102
2G322	102
2G323	102
2G324	102
2G339	103
2G339A	103
2G344	126
2G345	160
2G371	102A
2G371A	102A
2G374	102A
2G374A	102A
2G376	102A
2G377	102A
2G381	102A
2G381A	102A
2G382	160
2G383	100
2G384	102
2G385	102
2G386	102
2G387	102
2G394	100
2G395	158
2G396	100
2G397	100
2G401	160
2G402	160
2G403	160
2G404	160
2G413	160
2G414	160
2G415	160
2G416	160
2G417	160
2G508	102
2G509	102
2G524	100
2G525	100
2G526	100
2G527	100
2G577	100
2G601	126
2G602	126
2G603	100
2G604	100
2G605	100
2G805	116
2G1024	100
2G1025	100
2G1026	100
2G1027	102
2-G-3055	130
2G3055	130
2GA	116
2H1254	106
2H1255	106
2H1256	106
2H1257	106
2H1258	106
2H1259	106
2HR3J	125
2HR3M	125
2HT6	505
2HT-6	505
2HT16	504
2J72	160
2J73	160
2K02	125
2K48	160
2L15	525
2M78	101
2M214	5073A
2M1127	102
2MA	119
2MC	126
2MW665	109
2MW742	137A
2N2J324	128
2N23	102
2N24	102
2N25	102
2N26	102
2N27	100
2N28	101
2N29	101
2N30	100
2N31	100
2N32	102
2N32A	102
2N33	126
2N34	102A
2N34A	102A
2N35	103A
2N36	102A
2N37	102A
2N38	102A
2N38A	102A
2N39	102
2N40	102
2N41	102
2N42	102
2N43	102
2N43A	102
2N44	102
2N44A	102

To Be Replaced	ECG Replacement
2N45	102A
2N45A	102A
2N46	102
2N47	102
2N48	102
2N48A	102
2N49	102
2N50	102
2N51	102
2N52	102
2N53	102
2N54	102
2N55	102
2N56	102
2N58	102
2N59	102
2N59A	102
2N59B	102
2N59C	102
2N59D	102
2N60	102
2N60A	102
2N60B	102
2N60C	102
2N60R	102
2N61	102
2N61A	102
2N61B	102
2N61C	102
2N62	102A
2N63	102A
2N64	102A
2N65	102
2N71	102
2N72	126
2N73	102
2N74	102
2N75	126
2N76	102
2N77	102
2N78	101
2N78A	101
2N79	102
2N80	102
2N81	102
2N82	102
2N82AG	112
2N83	100
2N85	126
2N86	126
2N87	126
2N88	126
2N89	126
2N90	126
2N94	103A
2N94A	103A
2N95	103/411
2N96	102
2N97	101
2N97A	101
2N98	101
2N98A	101
2N99	101
2N100	101
2N102	101
2N103	101
2N104	102A
2N105	102A
2N106	102A
2N107	102A
2N108	102
2N109	102A
2N109/5	102
2N109BLU	102A
2N109GRN	102A
2N109M1	102A
2N109M2	102A
2N109WHT	102A
2N109YEL	102A
2N111	100
2N111A	100
2N111B	126
2N111M1	126
2N111M2	126
2N112	126
2N112A	100
2N112M1	126
2N114	100
2N117	123
2N118	123
2N118A	123
2N119	123
2N120	123
2N123	100
2N123A	126
2N124	101
2N125	101
2N126	103A
2N127	101
2N128	126
2N129	126
2N130	102
2N130A	102
2N131	102
2N131A	102
2N132	102
2N132A	102
2N133	102
2N133A	102A
2N135	100
2N136	100
2N137	100
2N138	102A
2N138A	102A
2N138B	102A

To Be Replaced	ECG Replacement
2N139	126
2N140	126
2N140M1	126
2N140M2	126
2N145	101
2N146	101
2N147	101
2N148	123
2N148A	103A
2N148B	103A
2N148C/D	103A
2N149	103A
2N149A	103A
2N149B	158
2N150	101
2N150A	101
2N151	102
2N155	121
2N157	121
2N157A	121
2N159	102
2N160	123
2N160A	123
2N161	123
2N161A	123
2N162	107
2N162A	107
2N163	123
2N163A	123
2N164	101
2N164A	101
2N165	101
2N166	101
2N167	101
2N167A	101
2N168	101
2N168A	101
2N169	101
2N169A	101
2N170	101
2N172	101
2N173	105
2N174	105
2N174A	105
2N174RED	105
2N175	102A
2N176	104
2N176-1	104
2N176-1BLU	121
2N176-1WHT	121
2N176-1YEL	121
2N176-3PUR	121
2N176-4PUR	121
2N176-5WHT	121
2N176-6WHT	121
2N176A	104
2N176BLK	121
2N176BLU	121
2N176G	104
2N176GRN	121
2N176M	121
2N176PUR	121
2N176RED	121
2N176W	104
2N176WHT	121
2N176(Wht/Brn)	121
2N176(Wht/Grn/Grn)	121
2N176(Wht/Grn)	121
2N176(Wht/Red)	121
2N176YEL	121
2N178	104
2N179	104
2N180	102A
2N181	102A
2N182	101
2N183	101
2N184	101
2N185	102A
2N185BLU	102A
2N186	102A
2N186A	102A
2N187	102A
2N187A	102
2N188	102
2N188A	102
2N189	102
2N190	102
2N191	102
2N192	102
2N193	103A
2N194	103A
2N194A	103A
2N195	102
2N196	102
2N197	102
2N198	102
2N199	102
2N200	102
2N204	102
2N205	102
2N206	102
2N207	102
2N207A	102
2N207B	102
2N207BLU	102
2N211	103A
2N212	103A
2N213	103A
2N213A	103A
2N214	103A
2N214A	103
2N215	102A
2N216	103A
2N217	102A
2N217A	102A

To Be Replaced	ECG Replacement
2N217RED	102A
2N217WHT	102A
2N217YEL	102A
2N218	160
2N219	160
2N220	102A
2N222	102A
2N222A	102A
2N223	102A
2N224	102A
2N225	102A
2N226	102A
2N227	102A
2N228	103A
2N229	103A
2N230	104
2N231BLU	126
2N231YEL	126
2N231-YEL-RED	126
2N232	160
2N233	103A
2N233A	103A
2N234	121
2N234A	121
2N235	121
2N235A	121
2N235B	121
2N236	121
2N236A	121
2N236B	121
2N237	102
2N238	102A
2N238D	102A
2N238E	102A
2N238F	102A
2N238-ORN	102A
2N240	160
2N241	102
2N241A	102
2N242	104
2N247	126
2N247/33	126
2N248	126
2N249	100
2N250	104
2N250A	104
2N251	121
2N251A	121
2N252	126
2N253	101
2N254	101
2N255	104
2N255A	104
2N256	104
2N256A	104
2N257	104
2N257A	104
2N257B	104
2N257G	104
2N257W	104
2N262	100
2N263	108
2N264	108
2N266	102
2N267	160
2N268	121
2N268A	121
2N269	160
2N270	102
2N270-5E	102
2N270A	102
2N271	100
2N271A	100
2N272	102
2N273	100
2N274	160
2N274BLU	160
2N274WHT	160
2N275	126
2N276	160
2N277	105
2N278	105
2N279	102A
2N280	102A
2N281	102A
2N282	102
2N283	102A
2N284	102A
2N284A	102A
2N285	104
2N285A	104
2N285B	104
2N286	160
2N290	104
2N291	102
2N292	101
2N292A	101
2N293	101
2N296	104
2N297	121
2N297A	121
2N299	160
2N300	160
2N301	121
2N301A	121
2N301B	121
2N301W	121
2N302	100
2N303	102
2N306	103A
2N306A	103A
2N307A	121
2N307B	121
2N308	100
2N309	100

To Be Replaced	ECG Replacement
2N310	102
2N311	100
2N312	101
2N313	101
2N314	101
2N315	100
2N315A	100
2N315B	100
2N316	160
2N316A	102
2N317	100
2N317A	100
2N318	126
2N319	102
2N320	102A
2N321	102
2N322	102
2N323	102
2N324	102
2N325	104
2N327	100
2N327A	100
2N327B	129
2N328	129
2N328A	129
2N328B	129
2N329	129
2N329A	129
2N329B	129
2N330	129
2N330A	129
2N331	160
2N332	123
2N332A	123
2N333	123
2N333A	123
2N334	123
2N334A	123
2N335	123
2N335A	123
2N335B	123
2N336	123
2N336A	123
2N337	107
2N337A	108
2N338A	123
2N343A	128
2N344	126
2N345	126
2N346	126
2N350	121
2N350A	121
2N351	121
2N351A	121
2N352	121
2N353	121
2N356	101
2N356A	101
2N357	101
2N357A	101
2N358	101
2N358A	101
2N359	102
2N360	102
2N361	102
2N362	102
2N362B	102
2N363	102
2N364	103
2N365	103
2N366	103
2N367	102
2N368	102
2N369	102
2N370	126
2N370/33	126
2N370A	126
2N371	126
2N371/33	126
2N372	126
2N372/33	126
2N373	126
2N374	126
2N375	104
2N376	104
2N376A	104
2N377	101
2N377A	101
2N378	104
2N379	121
2N380	104
2N381	102
2N382	102
2N383	102
2N384	160
2N384/33	160
2N385	101
2N385A	101
2N386	104
2N387	104
2N388	101
2N388A	101
2N392	104
2N393	126
2N394	100
2N394A	100
2N395	100
2N396	100
2N396A	100
2N397	100
2N399	104
2N400	104
2N401	104
2N402	102
2N403	102

To Be Replaced	ECG Replacement
2N404	102A
2N404A	102
2N405	102
2N406	102A
2N406BLU	102A
2N406BRN	102A
2N406GRN	102A
2N406GRN-YEL	102A
2N406ORN	102A
2N406RED	102A
2N407	102A
2N407BLK	102A
2N407GRN	102A
2N407J	102A
2N407RED	102A
2N407WHT	102A
2N407YEL	102A
2N408	102A
2N408J	102A
2N408WHT	102A
2N409	126
2N410	126
2N411	126
2N412	126
2N413	100
2N413A	100
2N414	100
2N414A	100
2N414B	100
2N414C	100
2N415	100
2N415A	100
2N416	100
2N417	100
2N418	121
2N419	104
2N420	121
2N420A	121
2N422	102
2N422A	102
2N425	100
2N426	100
2N427	100
2N427A	102A
2N428	100
2N428A	100
2N431	123
2N432	123
2N433	123
2N438	101
2N438A	101
2N439	101
2N439A	100
2N440	101
2N440A	100
2N441	105
2N441BLU	105
2N442	105
2N443	105
2N444	101
2N444A	103
2N445	101
2N445A	101
2N446	101
2N446A	103
2N447	101
2N447A	103
2N447B	103
2N448	101
2N449	101
2N450	100
2N456	104
2N456A	104
2N456B	104
2N457	104
2N457A	104
2N457B	104
2N458	104
2N458A	104
2N458B	121
2N459	121
2N459A	121
2N460	102
2N461	102
2N462	102
2N464	102
2N465	102
2N466	102
2N467	102
2N468	102
2N470	123
2N471	123
2N471A	123
2N472	128
2N472A	128
2N473	123
2N474	128
2N474A	128
2N475	128
2N475A	128
2N476	123
2N477	123
2N478	123
2N479	123
2N479A	123
2N480	123
2N480A	128
2N480B	128
2N481	100
2N482	100
2N483	100
2N483-6M	102
2N483B	102
2N484	100
2N485	100

To Be Replaced	ECG Replacement
2N486	100
2N486B	100
2N487	102
2N495	106
2N495/18	106
2N496	106
2N497	128
2N497A	128
2N498	128
2N499	126
2N499A	126
2N500	126
2N500BLU	126
2N500RED	126
2N500WHT	126
2N501	126
2N501/18	126
2N501A	126
2N502	126
2N502A	126
2N502B	126
2N503	100
2N504	126
2N505	100
2N506	102A
2N507	103A
2N508	102
2N508A	102
2N509	160
2N511	104
2N511A	104
2N511B	104
2N512	104
2N512A	104
2N512B	104
2N513	104
2N513A	104
2N513B	104
2N514	121
2N514A	121
2N514B	121
2N515	103A
2N516	103A
2N517	103A
2N518	100
2N519	100
2N519A	100
2N520	100
2N520A	100
2N521	100
2N521A	100
2N522	100
2N522A	100
2N523	100
2N523A	100
2N524	102
2N524A	102
2N525	102
2N525A	102
2N526	102
2N526A	102
2N527	102
2N527A	102
2N529	100
2N530	100
2N531	100
2N532	100
2N533	100
2N534	102A
2N535	102A
2N535A	102A
2N535B	102A
2N536	102A
2N537	160
2N538	121
2N538A	121
2N539	104
2N539A	104
2N540	104
2N540A	104
2N541	123
2N542	128
2N542A	123
2N543	128
2N543A	128
2N544	126
2N544/33	126
2N546	123
2N547	123
2N548	123
2N549	123
2N550	123
2N551	123
2N552	123
2N553	121
2N554	121
2N555	121
2N556	101
2N557	101
2N558	101
2N559	160
2N560	123
2N561	121
2N563	102
2N564	102
2N565	102
2N566	102
2N567	103A
2N568	102
2N569	102
2N570	102
2N571	100
2N572	100
2N573	102
2N573BRN	102

To Be Replaced	ECG Replacement
2N5730RN	102
2N573RED	102
2N575	105
2N575A	105
2N576	101
2N576A	101
2N578	100
2N579	100
2N580	100
2N581	100
2N582	100
2N583	126
2N584	126
2N585	101
2N586	100
2N587	101
2N588	126
2N588A	126
2N589	121
2N591	102A
2N591/5	102A
2N591-6M	126
2N591A	102A
2N592	100
2N593	100
2N594	101
2N595	101
2N596	101
2N597	100
2N598	100
2N599	100
2N600	100
2N602	126
2N602A	126
2N603	126
2N603A	126
2N604	126
2N604A	126
2N605	126
2N606	126
2N607	126
2N608	126
2N609	102
2N610	102
2N611	102
2N612	102
2N613	102
2N614	100
2N615	100
2N617	100
2N619	108
2N620	108
2N621	108
2N622	123
2N623	126
2N624	126
2N625	103
2N627	121
2N628	121
2N629	121
2N630	179
2N631	102
2N632	102
2N633	102
2N633B	102
2N634	101
2N634A	101
2N635	101
2N635A	101
2N636	101
2N636A	101
2N637	104
2N637A	104
2N637B	104
2N638	104
2N638A	104
2N638B	104
2N639	104
2N639A	104
2N639B	104
2N640	126
2N641	126
2N641REDM/F	126
2N642	126
2N643	126
2N644	126
2N645	126
2N646	103
2N647	103A
2N647/22	103A
2N648	103
2N649	103A
2N649/5	103A
2N650	102
2N650A	102
2N651	102
2N651A	102
2N652	102
2N652A	102
2N654	102
2N655	102
2N655A	128
2N655GRN	102
2N655RED	102
2N656	128
2N657	128
2N658	176
2N659	176
2N660	176
2N661	176
2N662	176
2N663	121
2N665	121
2N669	121
2N672	176

To Be Replaced	ECG Replacement
2N674	100
2N677	179
2N677A	179
2N677B	179
2N677C	121
2N678	179
2N678A	179
2N678B	121
2N678C	121
2N679	101
2N680	126
2N681	5520
2N682	5521
2N682A	5521
2N683	5522
2N683A	5522
2N684	5523
2N684A	5523
2N685	5524
2N686	5525
2N686A	5525
2N687	5526
2N687A	5526
2N688	5527
2N688A	5527
2N689	5528
2N689A	5528
2N690	5529
2N691	5530
2N692	5531
2N694	126
2N695	126
2N696	123
2N697	128
2N697A	123
2N697L	128
2N697S	128
2N699A,B	154
2N699L	282
2N699S	282
2N700	160
2N700/18	160
2N700A	160
2N700A/18	160
2N701	123
2N702	108
2N703	108
2N705	160
2N705A	160
2N706	108
2N706A	108
2N706B	108
2N706C	108
2N707	108
2N707A	123
2N708	123A
2N708A	123A
2N709	108
2N709/52	108
2N709A	108
2N710	160
2N710A	160
2N711	160
2N711A	160
2N711B	160
2N715	123
2N717	108
2N717A	108
2N718	108
2N718A	108
2N719	194
2N719A	194
2N720	128
2N720A	128
2N721	159
2N721A	159
2N722	159
2N722A	159
2N723	106
2N725	160
2N726	106
2N727	106
2N728	123
2N729	123
2N738	154
2N739	154
2N739A	154
2N740	154
2N740A	154
2N741	160
2N741A	160
2N742	123
2N742A	123
2N743	108
2N743A	108
2N744	108
2N745	123A
2N746	123A
2N747	123A
2N748	123A
2N749	123A
2N750	194
2N751	123A
2N752	108
2N753	123A
2N754	287
2N756	108
2N756A	123
2N757	108
2N757A	123
2N758	108
2N758A	123
2N758B	123
2N759	108
2N759A	123

To Be Replaced	ECG Replacement
2N759B	123
2N760	108
2N760A	123
2N760B	123
2N761	108
2N762	108
2N768	160
2N769	160
2N770	123
2N771	123
2N772	123
2N773	123
2N774	123
2N775	123
2N776	123
2N777	123
2N778	123
2N779	160
2N779A	160
2N779B	160
2N780	107
2N781	160
2N782	160
2N783	123A
2N784	123A
2N784A	123A
2N789	123
2N790	123
2N791	123
2N792	123
2N793	123
2N794	160
2N795	160
2N796	160
2N797	103
2N799	102
2N800	102A
2N801	100
2N802	100
2N803	158
2N804	158
2N805	158
2N806	158
2N807	102A
2N808	102A
2N809	100
2N810	100
2N811	100
2N812	100
2N813	102A
2N814	102A
2N815	102A
2N816	102A
2N817	158
2N818	158
2N819	102A
2N820	102A
2N821	101
2N822	101
2N823	101
2N824	101
2N825	102
2N826	102
2N827	160
2N828	160
2N828A	160
2N829	160
2N834	108
2N834A	123A
2N835	123A
2N837	160
2N838	160
2N839	123A
2N840	123A
2N841	108
2N842	123A
2N843	108
2N844	287
2N846	160
2N846A	160
2N846B	160
2N849	108
2N850	108
2N851	108
2N852	108
2N858	159
2N859	159
2N860	159
2N861	159
2N862	159
2N863	159
2N864	159
2N864A	106
2N865	106
2N865A	106
2N866	123
2N867	123
2N869	106
2N869A	106
2N870	128
2N871	128
2N876	5400
2N877	5400
2N878	5401
2N879	5402
2N880	5403
2N881	5404
2N909	123
2N910	128
2N911	128
2N912	128
2N913	108
2N914	108
2N914/51	108
2N914A	108

To Be Replaced	ECG Replacement
2N915	123A
2N916	108
2N916A	108
2N917	161
2N917A	161
2N918	108
2N919	123A
2N920	123A
2N921	123A
2N922	123A
2N923	159
2N924	159
2N925	159
2N926	159
2N927	159
2N928	159
2N929	123A
2N929A	194
2N930	123A
2N930A	123A
2N933	126
2N934	160
2N935	159
2N936	159
2N937	159
2N938	159
2N939	159
2N940	159
2N941	159
2N942	159
2N943	159
2N944	159
2N945	159
2N946	159
2N947	123A
2N955	101
2N955A	101
2N957	123A
2N960	160
2N960/46	160
2N961	160
2N962	160
2N963	160
2N964	160
2N964/46	160
2N964A	160
2N965	160
2N966	160
2N967	160
2N968	160
2N969	160
2N970	160
2N971	160
2N972	160
2N973	160
2N974	160
2N975	160
2N976	160
2N977	160
2N978	106
2N979	160
2N980	160
2N981	128
2N982	160
2N983	160
2N984	160
2N985	160
2N986	126
2N987	160
2N988	108
2N989	108
2N990	160
2N991	160
2N992	160
2N993	160
2N994	160
2N995	106
2N995A	106
2N996	106
2N997	172A
2N998	172A
2N999	172A
2N1000	101
2N1003	126
2N1004	126
2N1005	108
2N1006	123
2N1007	104
2N1008	102
2N1008A	102
2N1008B	102
2N1009	102
2N1010	103A
2N1011	121
2N1012	101
2N1014	121
2N1017	160
2N1018	160
2N1020	121
2N1021	121
2N1021A	121
2N1022	121
2N1022A	121
2N1023	160
2N1024	106
2N1025	159
2N1026	159
2N1026A	159
2N1027	159
2N1028	159
2N1029	121
2N1029A	121
2N1029B	121
2N1029C	121
2N1030	121

To Be Replaced	ECG Replacement
2N1030A	121
2N1030B	121
2N1030C	121
2N1031	121
2N1031A	121
2N1031B	121
2N1031C	121
2N1032	121
2N1032A	121
2N1032B	121
2N1032C	121
2N1033	121
2N1034	129
2N1035	129
2N1036	129
2N1037	129
2N1038	176
2N1040	104
2N1042	126
2N1043	126
2N1044	102
2N1045	102
2N1046	121
2N1046B	121
2N1051	128
2N1052	154
2N1053	154
2N1054	154
2N1056	102
2N1057	102
2N1058	103A
2N1059	103A
2N1060	108
2N1065	160
2N1066	160
2N1069	130
2N1070	130
2N1073	121
2N1073A	121
2N1073B	127
2N1081	128
2N1082	123
2N1086	101
2N1086A	101
2N1087	101
2N1090	101
2N1091	101
2N1092	128
2N1093	160
2N1094	160
2N1095	103
2N1096	103
2N1097	102
2N1098	102
2N1099	105
2N1100	105
2N1101	103A
2N1102	103A
2N1102/5	101
2N1103	128
2N1104	123
2N1107	126
2N1108	126
2N1108RED	126
2N1109	126
2N1110	126
2N1111	126
2N1111A	126
2N1111B	126
2N1111RED	126
2N1112	101
2N1114	101
2N1115	160
2N1115A	160
2N1116	128
2N1117	128
2N1118	159
2N1118A	159
2N1119	159
2N1120	121
2N1121	101
2N1122	160
2N1122A	160
2N1124	102
2N1125	102
2N1126	102
2N1128	102
2N1130	102A
2N1131	159
2N1131A	159
2N1132	159
2N1132/46	159
2N1132A	159
2N1132B	159
2N1135	159
2N1135A	159
2N1136	121
2N1136A	121
2N1136B	127
2N1137	121
2N1137A	121
2N1137B	127
2N1138	121
2N1138A	121
2N1139	123
2N1141	160
2N1141A	160
2N1142	160
2N1142A	160
2N1143	160
2N1143A	160
2N1144	160
2N1145	160
2N1146	104
2N1146A	104

To Be Replaced	ECG Replacement
2N1146B	104
2N1146C	104
2N1147	104
2N1147A	104
2N1147B	104
2N1147C	104
2N1149	123
2N1150	123
2N1151	123
2N1152	123
2N1153	123
2N1157	105
2N1157A	105
2N1158	160
2N1158A	160
2N1159	121
2N1160	121
2N1162	104
2N1162A	104
2N1163	121
2N1163A	121
2N1164	104
2N1164A	104
2N1165	104
2N1165A	121
2N1166	104
2N1166A	121
2N1168	121
2N1169	103
2N1170	103
2N1171	100
2N1173	103A
2N1173W	103A
2N1174	102
2N1174W	176
2N1175	102
2N1175A	102
2N1176	100
2N1176A	100
2N1176B	100
2N1177	160
2N1178	160
2N1179	160
2N1180	126
2N1182	121
2N1183	176
2N1183A	176
2N1183B	176
2N1184	176
2N1184A	176
2N1184B	176
2N1185	100
2N1186	100
2N1187	100
2N1188	100
2N1189	102
2N1190	102
2N1191	102
2N1192	102
2N1193	102
2N1194	102
2N1195	160
2N1196	159
2N1197	129
2N1198	103
2N1199	123
2N1199A	123
2N1200	123
2N1201	123
2N1202	105
2N1203	105
2N1204	126
2N1204A	126
2N1205	123
2N1207	154
2N1213	126
2N1214	126
2N1215	126
2N1216	126
2N1217	103
2N1219	159
2N1220	159
2N1221	159
2N1222	159
2N1223	159
2N1224	126
2N1225	126
2N1226	126
2N1227	104
2N1227-3	104
2N1227-4	104
2N1227-4R	104
2N1227A	104
2N1228	129
2N1229	129
2N1230	129
2N1231	129
2N1232	129
2N1233	129
2N1234	129
2N1238	106
2N1239	106
2N1240	106
2N1241	106
2N1245	104
2N1246	104
2N1247	123
2N1248	123
2N1249	123
2N1251	103A
2N1252	128
2N1253	128
2N1254	129
2N1255	129
2N1256	129

To Be Replaced	ECG Replacement
2N1257	129
2N1258	129
2N1259	129
2N1261	105
2N1262	105
2N1263	105
2N1264	100
2N1265	102
2N1265A	102
2N1266	102A
2N1267	123
2N1273	102
2N1273BLU	102
2N1273GRN	102
2N1273ORN	102
2N1273RED	102
2N1273YEL	102
2N1274	102
2N1274BLU	102
2N1274BRN	102
2N1274GRN	102
2N1274ORN	102
2N1274PUR	102
2N1274RED	102
2N1274V10	176
2N1275	129
2N1276	123
2N1277	123
2N1278	123
2N1279	123
2N1280	100
2N1281	100
2N1282	160
2N1284	100
2N1285	160
2N1287	102
2N1287A	102
2N1288	101
2N1289	101
2N1291	104
2N1292	121
2N1293	121
2N1295	121
2N1296	121
2N1297	121
2N1299	101
2N1300	160
2N1301	160
2N1303	158
2N1304	101
2N1305	158
2N1306	101
2N1307	158
2N1308	101
2N1309	100
2N1309A	160
2N1310	101
2N1311	101
2N1312	103
2N1313	126
2N1314	104
2N1314R	104
2N1315	176
2N1316	100
2N1317	100
2N1318	100
2N1319	100
2N1338	123
2N1343	100
2N1344	100
2N1345	100
2N1346	100
2N1347	100
2N1348	102
2N1349	100
2N1350	100
2N1351	100
2N1352	102
2N1353	102
2N1354	100
2N1355	100
2N1356	100
2N1357	100
2N1358	105
2N1358A	105
2N1358M	105
2N1359	121
2N1360	121
2N1361	100
2N1362	121
2N1363	121
2N1364	121
2N1365	121
2N1366	101
2N1367	101
2N1370	102
2N1371	102
2N1372	102
2N1373	102
2N1374	102
2N1375	102
2N1376	102
2N1377	102
2N1378	102
2N1379	102
2N1380	102
2N1381	102
2N1382	102
2N1383	102
2N1384	126
2N1385	160
2N1386	123
2N1387	123
2N1388	123
2N1389	123

To Be Replaced	ECG Replacement
2N1391	103
2N1392	102
2N1393	100
2N1395	100
2N1396	126
2N1397	126
2N1398	126
2N1399	126
2N1400	126
2N1401	126
2N1401A	126
2N1402	126
2N1403	160
2N1404	102
2N1404A	160
2N1405	160
2N1406	160
2N1407	160
2N1408	160
2N1409	160
2N1410	160
2N1411	160
2N1412	105
2N1413	102
2N1414	102
2N1415	102
2N1416	102A
2N1417	123
2N1418	123
2N1419	104
2N1420	128
2N1420A	128
2N1422	130
2N1423	130
2N1425	126
2N1426	126
2N1427	126
2N1428	159
2N1429	129
2N1430	121
2N1431	103A
2N1432	102
2N1433	105
2N1434	105
2N1435	105
2N1436	160
2N1439	159
2N1440	159
2N1441	159
2N1442	159
2N1443	159
2N1446	102
2N1447	102
2N1448	102
2N1449	102
2N1450	102
2N1451	102
2N1452	102
2N1469	100
2N1470	100
2N1471	100
2N1472	128
2N1473	101
2N1474	159
2N1474A	159
2N1475	159
2N1478	102
2N1479	128
2N1480	128
2N1481	128
2N1482	128
2N1487	280
2N1488	280
2N1489	280
2N1490	130
2N1491	195A
2N1492	195A
2N1493	154
2N1495	160
2N1499	126
2N1499A	126
2N1499B	126
2N1500	126
2N1500/18	160
2N1502	104
2N1505	108
2N1506	108
2N1506A	108
2N1507	108
2N1510	101
2N1515	160
2N1516	160
2N1517	160
2N1517A	160
2N1518	213
2N1519	213
2N1520	213
2N1521	213
2N1522	213
2N1523	105
2N1524	160
2N1524-1	160
2N1524-2	160
2N1524/33	160
2N1525	160
2N1526	126
2N1526/33	160
2N1527	160
2N1528	123
2N1529	121
2N1529A	121
2N1530	121
2N1530A	121
2N1531	121

To Be Replaced	ECG Replacement
2N1531A	121
2N1532	121
2N1532A	121
2N1533	121
2N1534	121
2N1534A	121
2N1535	121
2N1535A	121
2N1535B	121
2N1536	121
2N1536A	121
2N1537	121
2N1537A	121
2N1538	121
2N1538A	121
2N1539	179
2N1539A	179
2N1540	179
2N1540A	179
2N1541	179
2N1541A	179
2N1542	179
2N1542A	179
2N1543	179
2N1543A	179
2N1544	179
2N1544A	179
2N1545	179
2N1545A	179
2N1546	179
2N1546A	179
2N1547	179
2N1547A	179
2N1548	179
2N1548A	179
2N1549	179
2N1549A	179
2N1550	179
2N1550A	179
2N1551	179
2N1551A	179
2N1552	179
2N1552A	179
2N1553	179
2N1553A	179
2N1554	179
2N1554A	179
2N1555	179
2N1555A	179
2N1556	179
2N1556A	179
2N1557	179
2N1557A	179
2N1558	179
2N1558A	179
2N1559	179
2N1559A	179
2N1560	179
2N1560A	179
2N1562	160
2N1570	100
2N1572	154
2N1573	154
2N1574	154
2N1581	100
2N1583	100
2N1584	100
2N1585	101
2N1586	107
2N1587	107
2N1588	123A
2N1589	107
2N1590	107
2N1591	123A
2N1592	107
2N1593	107
2N1594	123A
2N1600	5470
2N1601	5471
2N1602	5472
2N1603	5473
2N1604	5474
2N1605	101
2N1605A	101
2N1606	129
2N1607	159
2N1608	159
2N1613	128
2N1613L	128
2N1613S	128
2N1614	158
2N1622	101
2N1623	129
2N1624	101
2N1631	126
2N1632	126
2N1633	160
2N1634	160
2N1635	126
2N1636	126
2N1637	126
2N1637/33	160
2N1638	160
2N1639	160
2N1639/33	160
2N1640	106
2N1641	106
2N1642	106
2N1643	159
2N1644	123A
2N1644A	123A
2N1646	160
2N1651	179
2N1652	121
2N1653	121

To Be Replaced	ECG Replacement
2N1663	123
2N1664	100
2N1665	160
2N1666	121
2N1667	121
2N1668	104
2N1669	104
2N1670	160
2N1671	6400
2N1672	103A
2N1672A	103A
2N1673	102A
2N1674	128
2N1676	159
2N1677	159
2N1678	160
2N1681	102A
2N1682	123
2N1683	100
2N1684	100
2N1685	101
2N1694	101
2N1699	126
2N1700	128
2N1702	130
2N1703	130
2N1704	128
2N1705	102
2N1706	102
2N1707	102
2N1708	123A
2N1708A	123A
2N1711	128
2N1711A	128
2N1711L	128
2N1711S	128
2N1713	160
2N1726	160
2N1727	160
2N1728	160
2N1729	100
2N1730	101
2N1731	100
2N1732	101
2N1742	160
2N1743	100
2N1744	100
2N1745	160
2N1746	160
2N1747	160
2N1748	160
2N1748A	160
2N1749	160
2N1750	160
2N1751	179
2N1752	160
2N1753	160
2N1754	160
2N1755	104
2N1756	104
2N1757	104
2N1758	104
2N1759	104
2N1760	104
2N1761	104
2N1762	104
2N1763	123
2N1764	128
2N1770	5480
2N1770A	5480
2N1771	5481
2N1771A	5481
2N1772	5482
2N1772A	5482
2N1773	5483
2N1773A	5483
2N1774	5483
2N1774A	5483
2N1775	5484
2N1775A	5484
2N1776	5484
2N1776A	5484
2N1776B	5484
2N1777	5485
2N1777A	5485
2N1778A	5486
2N1779	101
2N1780	101
2N1781	101
2N1782	160
2N1783	101
2N1784	160
2N1785	160
2N1786	160
2N1787	160
2N1788	160
2N1789	160
2N1790	160
2N1808	101
2N1838	128
2N1839	128
2N1840	123A
2N1842	5500
2N1842A	5500
2N1843	5501
2N1843A	5501
2N1843B	5501
2N1844	5502
2N1844A	5502
2N1844B	5502
2N1845	5503
2N1845A	5503
2N1845B	5504
2N1846	5504
2N1846A	5504

To Be Replaced	ECG Replacement
2N1846B	5504
2N1847	5505
2N1847A	5505
2N1847B	5505
2N1848	5506
2N1848A	5506
2N1848B	5506
2N1849	5507
2N1849A	5507
2N1849B	5507
2N1850	5508
2N1850A	5508
2N1850B	5508
2N1853	100
2N1853/18	160
2N1854	102
2N1858	103
2N1864	160
2N1865	160
2N1866	160
2N1867	160
2N1868	160
2N1889	128
2N1890	128
2N1891	101
2N1892	101
2N1893	282
2N1893L	282
2N1893S	282
2N1905	127
2N1906	179
2N1907	179
2N1907A	179
2N1908	179
2N1908A	179
2N1917	159
2N1918	159
2N1919	159
2N1920	159
2N1921	159
2N1922	129
2N1924	102A
2N1925	102A
2N1926	102A
2N1929	5400
2N1931	5483
2N1932	5483
2N1933	5483
2N1940	100
2N1944	123A
2N1945	123A
2N1946	123A
2N1947	123A
2N1948	123A
2N1949	128
2N1950	123A
2N1951	123A
2N1952	128
2N1953	128
2N1954	102A
2N1955	102A
2N1956	102A
2N1957	102A
2N1958	128
2N1959	128
2N1960	160
2N1960/46	160
2N1961	160
2N1962	123A
2N1963	123A
2N1964	123A
2N1965	123A
2N1969	102A
2N1970	105
2N1971	121
2N1972	128
2N1973	128
2N1974	128
2N1975	128
2N1980	105
2N1981	105
2N1982	105
2N1983	128
2N1984	128
2N1985	128
2N1986	128
2N1987	128
2N1988	128
2N1989	108
2N1990	128
2N1991	159
2N1992	123A
2N1993	101
2N1994	101
2N1995	101
2N1996	101
2N1997	100
2N1998	100
2N1999	160
2N2000	102A
2N2001	102A
2N2002	159
2N2003	159
2N2004	159
2N2005	159
2N2006	159
2N2007	159
2N2008	194
2N2017	128
2N2022	160
2N2032	108
2N2038	128
2N2039	128
2N2040	128
2N2041	128

To Be Replaced	ECG Replacement
2N2048	160
2N2048A	160
2N2049	128
2N2059	160
2N2061	104
2N2061A	121
2N2062	104
2N2062A	104
2N2063	104
2N2063A	104
2N2064	104
2N2064A	104
2N2065	104
2N2065A	104
2N2066	104
2N2066A	104
2N2067	104
2N2067B	104
2N2067G	104
2N2067W	104
2N2069	104
2N2070	104
2N2075	105
2N2075A	105
2N2076	105
2N2076A	105
2N2077	105
2N2077A	105
2N2078	105
2N2078A	105
2N2079	105
2N2079A	105
2N2080	105
2N2080A	105
2N2081	105
2N2081A	105
2N2082	105
2N2082A	105
2N2083	160
2N2084	160
2N2085	101
2N2089	126
2N2090	126
2N2091	160
2N2092	126
2N2093	160
2N2094	128
2N2094A	128
2N2095	158
2N2095A	128
2N2096	158
2N2096A	123A
2N2097A	123A
2N2098	160
2N2099	160
2N2100	160
2N2102	128
2N2102L	128
2N2102S	128
2N2104	159
2N2105	159
2N2106	128
2N2107	128
2N2108	128
2N2121	159
2N2137	104
2N2137A	104
2N2138	104
2N2138A	104
2N2139	104
2N2139A	104
2N2140	104
2N2140A	104
2N2141	104
2N2141A	104
2N2142	104
2N2142A	104
2N2143	104
2N2143A	104
2N2144	104
2N2144A	104
2N2145	104
2N2145A	104
2N2146	104
2N2146A	104
2N2147	104
2N2148	121
2N2152	213
2N2152A	213
2N2153	213
2N2153A	213
2N2154	213
2N2154A	213
2N2155	105
2N2155A	105
2N2156	213
2N2156A	213
2N2157	213
2N2157A	213
2N2158	213
2N2158A	213
2N2159	105
2N2159A	105
2N2160	6400
2N2161	128
2N2162	159
2N2163	159
2N2164	159
2N2165	159
2N2166	159
2N2167	159
2N2168	160
2N2169	5487
2N2170	160
2N2171	100

To Be Replaced	ECG Replacement
2N2172	100
2N2173	102A
2N2175	106
2N2176	106
2N2177	106
2N2178	159
2N2180	126
2N2181	159
2N2182	159
2N2183	159
2N2184	159
2N2185	159
2N2186	159
2N2187	159
2N2188	160
2N2189	160
2N2190	160
2N2191	160
2N2192	128
2N2192A	128
2N2192B	128
2N2193	128
2N2193A	128
2N2193B	128
2N2194	128
2N2194A	128
2N2194B	128
2N2195	108
2N2195A	128
2N2195B	108
2N2196	224
2N2197	108
2N2198	123
2N2199	160
2N2200	160
2N2204	124
2N2205	123A
2N2206	123A
2N2207	126
2N2208	126
2N2209	100
2N2210	105
2N2212	121
2N2217	128
2N2218	123
2N2218A	123
2N2219A	128
2N2220	123A
2N2221	123A
2N2221A	123A
2N2222	123A
2N2225	160
2N2234	123
2N2235	123
2N2236	128
2N2237	128
2N2238	160
2N2240	123
2N2241	123
2N2242	123A
2N2244	123A
2N2245	123A
2N2246	123A
2N2247	123A
2N2248	123A
2N2249	123A
2N2250	123A
2N2251	123A
2N2252	123A
2N2253	123A
2N2254	123A
2N2255	123A
2N2256	123A
2N2257	123A
2N2258	160
2N2259	160
2N2266	105
2N2267	105
2N2268	105
2N2269	105
2N2270	128
2N2270L	128
2N2270S	128
2N2271	102
2N2272	123A
2N2273	160
2N2274	159
2N2275	159
2N2276	159
2N2277	159
2N2278	159
2N2279	159
2N2280	159
2N2281	159
2N2282	104
2N2285	179
2N2286	179
2N2287	121
2N2288	121
2N2289	121
2N2290	127
2N2291	121
2N2292	121
2N2293	121
2N2294	121
2N2295	121
2N2296	121
2N2297	128
2N2299	159
2N2303	159
2N2305	130
2N2309	128
2N2310	123A
2N2312	123A
2N2314	123A

To Be Replaced	ECG Replacement
2N2315	123A
2N2318	123A
2N2319	123A
2N2320	311
2N2330	123
2N2331	123A
2N2332	159
2N2333	159
2N2334	159
2N2335	159
2N2336	159
2N2337	159
2N2349	128
2N2353	123A
2N2353A	123A
2N2354	103
2N2357	121
2N2358	121
2N2360	160
2N2361	160
2N2362	160
2N2363	126
2N2368	123A
2N2368A	123A
2N2369	123A
2N2370	159
2N2371	159
2N2372	159
2N2373	159
2N2374	102
2N2375	102
2N2376	102
2N2377	159
2N2378	159
2N2381	160
2N2382	160
2N2386	460
2N2386A	460
2N2389	123
2N2390	123
2N2393	159
2N2394	159
2N2395	106
2N2396	123
2N2397	123
2N2398	160
2N2399	160
2N2400	160
2N2401	160
2N2402	160
2N2405	282
2N2405L	282
2N2405S	282
2N2406	176
2N2411	159
2N2412	159
2N2413	123A
2N2415	160
2N2416	160
2N2417	123A
2N2423	121
2N2424	159
2N2425	159
2N2426	101
2N2427	123A
2N2428	102A
2N2429	102A
2N2430	103A
2N2431	158
2N2432	123A
2N2443	128
2N2446	121
2N2447	102A
2N2448	102A
2N2449	102A
2N2450	102A
2N2451	126
2N2454	5474
2N2455	160
2N2456	126
2N2466	123A
2N2468	102
2N2469	102
2N2476	311
2N2477	311
2N2481	123A
2N2482	103
2N2483	123A
2N2484	123A
2N2487	126
2N2488	126
2N2489	126
2N2490	105
2N2491	105
2N2492	105
2N2493	105
2N2494	126
2N2495	160
2N2496	160
2N2498	460
2N2501	123A
2N2509	154
2N2510	154
2N2511	154
2N2512	160
2N2520	287
2N2521	287
2N2522	287
2N2523	123A
2N2524	123A
2N2526	127
2N2527	127
2N2528	127
2N2529	123A
2N2530	123A

To Be Replaced	ECG Replacement
2N2531	123A
2N2532	123A
2N2533	123A
2N2534	123A
2N2539	123A
2N2540	123A
2N2540A	195A
2N2541	176
2N2564	102
2N2565	102
2N2569	123A
2N2570	123A
2N2571	123A
2N2572	123A
2N2586	123A
2N2587	160
2N2588	126
2N2594	128
2N2595	159
2N2596	159
2N2597	159
2N2598	159
2N2599	159
2N2600	159
2N2601	159
2N2602	159
2N2603	159
2N2604	159
2N2605	159
2N2605A	159
2N2608	460
2N2609	460
2N2610	107
2N2612	104
2N2613	102A
2N2614	102A
2N2616	108
2N2617	123AP
2N2618	154
2N2619	5476
2N2621	160
2N2622	160
2N2623	160
2N2624	160
2N2625	160
2N2626	160
2N2627	160
2N2628	160
2N2629	160
2N2630	160
2N2631	132
2N2635	160
2N2636	179
2N2637	179
2N2638	179
2N2645	123A
2N2646	6401
2N2647	6409
2N2648	176
2N2651	108
2N2653	5474
2N2654	160
2N2656	123A
2N2671	160
2N2672	160
2N2672A	160
2N2672BLK	160
2N2672GRN	160
2N2673	123A
2N2674	123A
2N2675	123A
2N2676	123A
2N2677	123A
2N2678	123A
2N2679	5400
2N2680	5401
2N2680A	5401
2N2687	5400
2N2688	5401
2N2689	5402
2N2690	5404
2N2691	179
2N2691A	179
2N2692	123A
2N2693	123A
2N2695	159
2N2696	159
2N2699	101
2N2706	158
2N2707	158
2N2708	108
2N2709	159
2N2710	108
2N2711	108
2N2712	108
2N2713	107
2N2714	107
2N2715	108
2N2716	108
2N2717	160
2N2719	123A
2N2728	105
2N2729	108
2N2730	105
2N2731	105
2N2732	105
2N2783	126
2N2784	108
2N2784/52	108
2N2786	160
2N2786A	160
2N2793	105
2N2795	160
2N2796	160
2N2797	160

To Be Replaced	ECG Replacement
2N2798	160
2N2799	160
2N2800	159
2N2800/46	159
2N2801	159
2N2802	106
2N2803	106
2N2804	106
2N2805	106
2N2806	106
2N2807	106
2N2831	123A
2N2832	121
2N2835	131
2N2836	121
2N2837	159
2N2838	159
2N2845	123A
2N2846	128
2N2847	123A
2N2848	128
2N2849	128
2N2850	128
2N2851	128
2N2852	128
2N2853	128
2N2853-1	210
2N2854	128
2N2854-1	210
2N2855	128
2N2855-1	210
2N2856	128
2N2856-1	210
2N2857	316
2N2860	160
2N2861	159
2N2862	159
2N2865	161
2N2868	128
2N2869	121
2N2869/2N301	121
2N2870	121
2N2873	160
2N2883	108
2N2884	108
2N2888	5524
2N2889	5525
2N2894	159
2N2894A	159
2N2895	128
2N2897	128
2N2904	129
2N2904A	129
2N2905	129
2N2905A	129
2N2906	159
2N2906A	159
2N2907	159
2N2907A	159
2N2921	108
2N2922	108
2N2923	199
2N2924	199
2N2925	199
2N2926	199
2N2926-6	123A
2N2926G	123A
2N2926GRN	123A
2N2926ORN	123A
2N2927	159
2N2927/46	159
2N2928	160
2N2929	160
2N2930	100
2N2931	199
2N2932	199
2N2933	199
2N2934	199
2N2935	199
2N2938	123A
2N2942	160
2N2943	160
2N2944	159
2N2944A	159
2N2945	159
2N2945A	159
2N2946	159
2N2946A	159
2N2949	195A
2N2951	123A
2N2952	123A
2N2953	102
2N2955	160
2N2956	160
2N2957	160
2N2958	123A
2N2959	123A
2N2960	123A
2N2961	123A
2N2966	100
2N2968	106
2N2968A	133
2N2969	106
2N2970	106
2N2971	106
2N2996	160
2N2997	160
2N2998	160
2N2999	160
2N3005	5400
2N3006	5404
2N3007	5402
2N3008	5404
2N3009	123A
2N3010	108

To Be Replaced	ECG Replacement
2N3011	123A
2N3012	159
2N3013	123A
2N3014	123A
2N3015	123
2N3019	282
2N3020	128
2N3027	5400
2N3028	5401
2N3029	5402
2N3030	5400
2N3031	5401
2N3032	5402
2N3035	108
2N3053	128
2N3054	175
2N3055	130
2N3055-1	130
2N3055A	130
2N3055H	130
2N3058	159
2N3059	159
2N3060	159
2N3062	159
2N3066	133
2N3067	133
2N3068	133
2N3070	133
2N3071	133
2N3072	159
2N3073	159
2N3074	160
2N3075	100
2N3077	128
2N3078	128
2N3081	159
2N3082	107
2N3083	107
2N3084	133
2N3085	133
2N3086	133
2N3087	133
2N3088	133
2N3088A	133
2N3089	133
2N3089A	133
2N3107	128
2N3108	128
2N3109	128
2N3110	128
2N3114	154
2N3115	123A
2N3116	123A
2N3117	128
2N3120	129
2N3121	159
2N3122	128
2N3125	121
2N3127	160
2N3128	123AP
2N3129	123AP
2N3130	123AP
2N3132	121
2N3133	129
2N3134	129
2N3135	159
2N3136	159
2N3137	107
2N3148	160
2N3153	160
2N3202	129
2N3203	129
2N3208	129
2N3209	106
2N3210	123A
2N3211	123A
2N3212	121
2N3213	121
2N3214	121
2N3215	121
2N3216	160
2N3217	159
2N3218	159
2N3219	159
2N3226	130
2N3227	108
2N3228	5511
2N3232	130
2N3233	130
2N3234	130
2N3241	123A
2N3241A	123A
2N3242	123A
2N3242A	123A
2N3245	106
2N3246	123A
2N3247	123A
2N3248	159
2N3249	159
2N3250	159
2N3250A	159
2N3251	159
2N3251A	159
2N3259	5401
2N3261	123A
2N3262	128
2N3267	160
2N3268	123
2N3279	160
2N3280	160
2N3281	160
2N3282	160
2N3283	160
2N3284	160
2N3285	160

To Be Replaced	ECG Replacement
2N3286	160
2N3287	161
2N3288	161
2N3289	161
2N3290	161
2N3291	161
2N3292	161
2N3293	161
2N3294	161
2N3299	311
2N3299S	311
2N3300	311
2N3300S	311
2N3301	123A
2N3302	123A
2N3304	106
2N3305	159
2N3306	159
2N3307	159
2N3308	159
2N3310	123
2N3311	105
2N3312	105
2N3313	105
2N3314	105
2N3315	105
2N3317	159
2N3318	159
2N3319	159
2N3320	160
2N3321	160
2N3322	160
2N3323	160
2N3324	160
2N3325	160
2N3326	128
2N3330	460
2N3337	161
2N3338	161
2N3339	161
2N3340	123A
2N3341	159
2N3342	106
2N3343	129
2N3344	129
2N3345	129
2N3346	159
2N3371	160
2N3376	460
2N3377	460
2N3378	460
2N3379	460
2N3388	154
2N3389	154
2N3390	199
2N3391	199
2N3391A	199
2N3392	199
2N3393	199
2N3394	199
2N3395	199
2N3396	199
2N3397	199
2N3398	199
2N3399	160
2N3400	160
2N3401	159
2N3402	192A
2N3403	192A
2N3404	192A
2N3407	108
2N3412	160
2N3414	297
2N3415	297
2N3416	289
2N3417	289
2N3427	102
2N3428	102
2N3436	133
2N3437	133
2N3438	133
2N3440	396
2N3441	286
2N3442	284
2N3443	160
2N3445	130
2N3446	130
2N3447	281
2N3448	130
2N3449	160
2N3451	159
2N3452	133
2N3453	133
2N3454	133
2N3455	133
2N3456	133
2N3460	133
2N3462	123A
2N3463	123A
2N3464	159
2N3465	133
2N3466	133
2N3467	129
2N3468	129
2N3469	128
2N3478	316
2N3483	175
2N3485	159
2N3485A	159
2N3486	159
2N3486A	159
2N3493	108
2N3494	129
2N3496	159
2N3498	123

To Be Replaced	ECG Replacement
2N3502	129
2N3503	129
2N3504	159
2N3505	159
2N3506	128
2N3507	128
2N3508	108
2N3509	108
2N3510	123A
2N3511	108
2N3525	5512
2N3526	154
2N3527	159
2N3544	108
2N3545	159
2N3547	159
2N3548	159
2N3549	159
2N3550	159
2N3562	108
2N3563	108
2N3563-1	108
2N3564	229
2N3565	123AP
2N3566	123AP
2N3567	297
2N3568	128
2N3569	128
2N3570	108
2N3571	108
2N3572	108
2N3576	106
2N3578	460
2N3579	159
2N3580	159
2N3581	159
2N3582	159
2N3583	286
2N3584	286
2N3585	124
2N3588	160
2N3600	108
2N3605	289
2N3606	289
2N3607	289
2N3611	121
2N3612	121
2N3613	121
2N3614	121
2N3615	121
2N3616	121
2N3617	121
2N3618	121
2N3631	462
2N3633	108
2N3638	159
2N3638A	159
2N3639	159
2N3640	159
2N3641	123AP
2N3642	128
2N3643	123AP
2N3644	159
2N3645	129
2N3646	123AP
2N3647	123
2N3648	108
2N3649	5501
2N3654	5501
2N3662	107
2N3663	107
2N3665	128
2N3666	128
2N3667	130
2N3671	129
2N3672	159
2N3673	159
2N3677	129
2N3678	128
2N3682	108
2N3684	459
2N3684A	133
2N3685	133
2N3685A	133
2N3686	133
2N3686A	133
2N3687	133
2N3687A	311
2N3688	108
2N3689	108
2N3690	108
2N3691	108
2N3692	108
2N3693	123AP
2N3694	123AP
2N3700	154
2N3701	154
2N3702	159
2N3703	159
2N3704	297
2N3705	297
2N3706	297
2N3707	199
2N3708	199
2N3709	199
2N3710	199
2N3711	199
2N3712	154
2N3713	130
2N3713HS	280
2N3714	130
2N3714HS	280
2N3715	130
2N3716	284
2N3716HS	284

To Be Replaced	ECG Replacement
2N3719	129
2N3720	129
2N3721	107
2N3723	128
2N3730	127
2N3731	127
2N3732	127
2N3738	124
2N3739	124
2N3741	292
2N3741A	218
2N3742	154
2N3743	154
2N3753	5491
2N3762	129
2N3763	129
2N3764	129
2N3765	129
2N3766	175
2N3767	175
2N3770	160
2N3771	181
2N3772	181
2N3772C	181
2N3773	284
2N3774	129
2N3775	129
2N3776	129
2N3778	129
2N3779	175
2N3780	129
2N3781	129
2N3782	129
2N3783	160
2N3784	160
2N3785	160
2N3789	219
2N3790	219
2N3791	219
2N3792	219
2N3793	123AP
2N3794	123AP
2N3797	462
2N3798	159
2N3799	159
2N3819	132
2N3821	133
2N3822	459
2N3825	107
2N3826	107
2N3827	229
2N3828	123AP
2N3829	159
2N3830	282
2N3831	282
2N3832	108
2N3839	316
2N3840	159
2N3843	199
2N3843A	199
2N3844	199
2N3844A	199
2N3845	107
2N3845A	107
2N3846	107
2N3854	108
2N3854A	108
2N3855	107
2N3855A	107
2N3856	107
2N3856A	107
2N3857	159
2N3858	199
2N3858A	199
2N3859	123A
2N3859A	123A
2N3860	107
2N3862	108
2N3863	130
2N3864	130
2N3866	311
2N3866A	311
2N3867	129
2N3868	129
2N3869	123
2N3870	5517
2N3871	5517
2N3872	5518
2N3873	5519
2N3877	128
2N3878	175
2N3880	316
2N3883	160
2N3896	5522
2N3897	5524
2N3898	5527
2N3899	5547
2N3900	123
2N3900A	199
2N3901	199
2N3902	283
2N3903	123AP
2N3904	123AP
2N3905	159
2N3906	159
2N3914	159
2N3915	106
2N3919	328
2N3920	328
2N3923	154
2N3924	123
2N3930	159
2N3931	159
2N3932	108
2N3933	108

To Be Replaced	ECG Replacement
2N3947	199
2N3948	128
2N3962	159
2N3963	159
2N3964	159
2N3965	159
2N3967	133
2N3967	456
2N3967A	133
2N3968	133
2N3968	456
2N3968A	133
2N3968A	456
2N3969	133
2N3969A	133
2N3970	466
2N3971	466
2N3975	123AP
2N3976	123AP
2N3977	159
2N3978	159
2N3979	159
2N3983	108
2N3984	108
2N3985	108
2N3995	160
2N4013	123A
2N4014	123A
2N4026	129
2N4027	129
2N4028	129
2N4029	129
2N4030	129
2N4031	129
2N4032	129
2N4033	129
2N4034	106
2N4035	106
2N4036	129
2N4037	129
2N4038	465
2N4039	465
2N4046	311
2N4054	157
2N4055	157
2N4056	157
2N4057	157
2N4058	106
2N4059	106
2N4060	106
2N4061	106
2N4062	106
2N4065	464
2N4068	154
2N4071	327
2N4072	108
2N4073	108
2N4074	123A
2N4077	155
2N4078	131
2N4079	131,155(CP)
2N4091	466
2N4092	466
2N4093	312
2N4101	5513
2N4111	328
2N4113	328
2N4117	133
2N4117A	133
2N4118	133
2N4119	133
2N4119A	133
2N4120	464
2N4121	159
2N4123	123AP
2N4124	123AP
2N4125	159
2N4126	159
2N4127	350
2N4128	351
2N4134	108
2N4135	108
2N4141	199
2N4142	159
2N4144	5400
2N4145	5400
2N4146	5401
2N4147	5402
2N4148	5403
2N4149	5404
2N4167	5480
2N4168	5481
2N4169	5482
2N4170	5483
2N4171	5484
2N4172	5485
2N4173	5486
2N4174	5487
2N4175	5480
2N4176	5481
2N4177	5482
2N4178	5483
2N4179	5484
2N4180	5485
2N4181	5486
2N4182	5487
2N4207	159
2N4208	159
2N4209	159
2N4221	456
2N4221A	456
2N4222	133
2N4222A	133
2N4223	133
2N4231	175

To Be Replaced	ECG Replacement
2N4232	175
2N4233	175
2N4234	129
2N4235	129
2N4236	129
2N4237	128
2N4240	124
2N4241	121
2N4248	159
2N4249	159
2N4250	159
2N4250A	159
2N4251	108
2N4254	107
2N4255	107
2N4256	289
2N4257	159
2N4257A	159
2N4258A	159
2N4259	161
2N4267	464
2N4269	154
2N4270	154
2N4274	108
2N4275	108
2N4286	289
2N4287	289
2N4288	159
2N4289	159
2N4290	159
2N4291	159
2N4296	124
2N4297	124
2N4298	124
2N4299	124
2N4302	457
2N4303	457
2N4304	457
2N4313	106
2N4314	129
2N4338	133
2N4339	133
2N4340	133
2N4340	456
2N4346	127
2N4347	280
2N4348	280
2N4351	465
2N4352	464
2N4353	464
2N4354	159
2N4355	159
2N4356	159
2N4359	159
2N4360	326
2N4381	460
2N4387	153
2N4388	153
2N4389	106
2N4391	466
2N4392	466
2N4395	181
2N4396	181
2N4398	180
2N4400	123AP
2N4401	123AP
2N4402	159
2N4403	159
2N4404	129
2N4405	129
2N4406	129
2N4407	129
2N4409	194
2N4410	154
2N4411	159
2N4412	129
2N4412A	129
2N4413	159
2N4413A	159
2N4414	129
2N4414A	129
2N4415	159
2N4415A	159
2N4416	452
2N4416A	452
2N4417	452
2N4418	108
2N4419	108
2N4424	289
2N4425	192A
2N4427	346
2N4432	311
2N4432A	311
2N4433	107
2N4434	161
2N4435	161
2N4436	123AP
2N4437	311
2N4441	5442
2N4442	5444
2N4443	5446
2N4444	5448
2N4449	108
2N4450	123A
2N4451	106
2N4452	159
2N4453	106
2N4851	6401
2N4852	6409
2N4853	6409
2N4856	466
2N4857	466
2N4857A	466
2N4859	466
2N4859A	466

To Be Replaced	ECG Replacement
2N4860	466
2N4867	133
2N4867A	133
2N4868	133
2N4868A	133
2N4869	133
2N4869	456
2N4869A	133
2N4869A	456
2N4870	6401
2N4871	6401
2N4872	106
2N4873	108
2N4890	129
2N4898	218
2N4899	218
2N4900	218
2N4901	218
2N4902	218
2N4903	218
2N4904	281
2N4905	281
2N4906	281
2N4907	218
2N4908	218
2N4909	218
2N4910	175
2N4911	175
2N4912	175
2N4913	280
2N4914	280
2N4915	280
2N4916	159
2N4917	159
2N4918	185
2N4919	185
2N4921	184
2N4922	184
2N4923	184
2N4924	154
2N4925	154
2N4926	154
2N4927	154
2N4928	129
2N4934	108
2N4935	108
2N4936	108
2N4943	128
2N4944	128
2N4945	194
2N4946	128
2N4948	6409
2N4951	123AP
2N4952	123AP
2N4953	123AP
2N4954	123AP
2N4960	128
2N4961	128
2N4962	128
2N4963	128
2N4964	128
2N4965	159
2N4966	123A
2N4967	123A
2N4968	123A
2N4969	123A
2N4970	123AP
2N4971	159
2N4972	159
2N4982	159
2N4983	6404
2N4987	6404
2N4990	6404
2N4991	6403
2N4992	6403
2N4993	6403
2N4994	123AP
2N4995	123AP
2N4996	108
2N4997	108
2N5022	129
2N5023	129
2N5031	107
2N5032	107
2N5034	223
2N5035	223
2N5036	223
2N5037	223
2N5038	328
2N5038-1	328
2N5039	328
2N5039-1	328
2N5040	129
2N5041	129
2N5042	129
2N5045	133
2N5046	133
2N5047	133
2N5050	286
2N5051	291
2N5052	286
2N5053	108
2N5054	108
2N5058	154
2N5059	154
2N5060	5400
2N5061	5401
2N5062	5402
2N5063	5403
2N5064	5404
2N5067	280
2N5068	280
2N5069	280
2N5078	452
2N5081	123A

To Be Replaced	ECG Replacement
2N5082	123A
2N5086	159
2N5087	159
2N5088	199
2N5089	123AP
2N5107	123A
2N5108	278
2N5109	278
2N5110	129
2N5111	129
2N5126	161
2N5127	123AP
2N5128	123AP
2N5129	128
2N5130	161
2N5131	108
2N5132	107
2N5133	161
2N5134	123AP
2N5135	128
2N5136	128
2N5137	123AP
2N5138	159
2N5139	159
2N5140	106
2N5141	106
2N5142	159
2N5143	159
2N5156	213
2N5157	283
2N5160	129
2N5163	132
2N5164	5514
2N5165	5514
2N5166	5515
2N5167	5516
2N5168	5521
2N5169	5524
2N5171	5529
2N5172	289
2N5174	154
2N5175	154
2N5176	154
2N5179	316
2N5180	108
2N5181	161
2N5182	161
2N5183	123
2N5184	154
2N5186	108
2N5187	108
2N5188	128
2N5189	282
2N5190	184
2N5191	184
2N5192	184
2N5193	185
2N5194	185
2N5195	185
2N5196	461
2N5197	461
2N5198	461
2N5199	461
2N5200	108
2N5201	100
2N5202	175
2N5204	5547
2N5208	106
2N5209	123AP
2N5210	123AP
2N5211	128
2N5219	123AP
2N5220	289
2N5221	290
2N5222	107
2N5223	123AP
2N5224	123AP
2N5225	123AP
2N5226	159
2N5227	159
2N5228	106
2N5230	161
2N5232	199
2N5232A	199
2N5233	128
2N5234	128
2N5235	128
2N5239	283
2N5240	283
2N5241	283
2N5242	129
2N5243	129
2N5245	312
2N5246	312
2N5247	312
2N5248	132
2N5249A	199
2N5262	282
2N5264	162
2N5272	108
2N5273	5683
2N5274	5685
2N5275	5697
2N5277	133
2N5278	458
2N5292	108
2N5293	152
2N5294	152
2N5295	152
2N5296	152
2N5297	152
2N5298	152
2N5301	181
2N5302	181
2N5303	181

To Be Replaced	ECG Replacement
2N5305	172A
2N5306	172A
2N5307	172A
2N5308	172A
2N5309	128
2N5310	199
2N5311	199
2N5320	128
2N5320HS	192
2N5321	195A
2N5322	129
2N5352	106
2N5354	159
2N5355	159
2N5356	159
2N5365	159
2N5366	159
2N5367	159
2N5368	123AP
2N5369	123AP
2N5370	123AP
2N5371	123AP
2N5372	159
2N5373	159
2N5374	159
2N5375	159
2N5378	159
2N5379	159
2N5380	123AP
2N5382	159
2N5383	159
2N5398	452
2N5399	108
2N5400	288
2N5401	288
2N5410(TRW)	5876
2N5415	397
2N5416	397
2N5418	289
2N5419	289
2N5420	289
2N5421	128
2N5444	5693
2N5445	5695
2N5446	5697
2N5447	159
2N5448	159
2N5449	128
2N5450	128
2N5451	128
2N5452	461
2N5453	461
2N5454	461
2N5457	457
2N5458	457
2N5461	326
2N5462	326
2N5464	326
2N5466	163A
2N5467	165
2N5484	312
2N5485	451
2N5485-1	451
2N5486	132
2N5490	196
2N5491	196
2N5492	196
2N5493	196
2N5494	196
2N5495	196
2N5496	196
2N5497	196
2N5525	172A
2N5543	459
2N5544	459
2N5545	461
2N5546	461
2N5547	461
2N5550	194
2N5551	287
2N5555	312
2N5569	5673
2N5570	5675
2N5573	5673
2N5574	5675
2N5589	347
2N5590	349
2N5591	351
2N5598	175
2N5600	175
2N5602	175
2N5604	175
2N5614	328
2N5616	328
2N5618	328
2N5620	328
2N5621	180
2N5622	328
2N5623	180
2N5624	328
2N5625	180
2N5626	328
2N5628	328
2N5629	284
2N5630	284
2N5631	284
2N5632	181
2N5633	162
2N5634	284
2N5639	467
2N5641	357
2N5642	359
2N5643	360
2N5644	362
2N5645	363

To Be Replaced	ECG Replacement
2N5646	364
2N5650	161
2N5651	161
2N5652	161
2N5655	157
2N5656	157
2N5660	369
2N5668	457
2N5671	327
2N5672	327
2N5681	282
2N5682	282
2N5687	346
2N5689	337
2N5690	338
2N5698	362
2N5711	357
2N5712	359
2N5713	359
2N5718	457
2N5738	180
2N5741	180
2N5742	180
2N5745	180
2N5754	5640
2N5755	5641
2N5756	5642
2N5757	5643
2N5758	162
2N5759	162
2N5760	162
2N5780	3035
2N5784	282
2N5785	282
2N5787	5400
2N5788	5401
2N5789	5402
2N5790	5404
2N5804	283
2N5805	283
2N5806	5543
2N5807	5545
2N5808	5546
2N5809	5547
2N5818	123AP
2N5820	128
2N5820HS	192
2N5821	129
2N5821HS	193
2N5830	287
2N5838	163A
2N5839	163A
2N5840	163A
2N5846	282
2N5847	337
2N5848	338
2N5849	339
2N5865	129
2N5869	181
2N5870	181
2N5871	285
2N5874	280
2N5876	285
2N5878	284
2N5879	180
2N5880	180
2N5881	181
2N5882	181
2N5883	180
2N5884	180
2N5885	181
2N5886	181
2N5893	131
2N5897	131
2N5914	362
2N5915	364
2N5943	278
2N5944	362
2N5945	363
2N5946	364
2N5953	312
2N5970	280
2N5971	280
2N5972	280
2N5973	280
2N5986	183
2N5994	360
2N5996	350
2N5999	159
2N6003	159
2N6004	123AP
2N6005	159
2N6021	153
2N6022	153
2N6023	153
2N6024	153
2N6025	180
2N6026	153
2N6027	6402
2N6028	6402
2N6029	285
2N6030	285
2N6031	285
2N6034	254
2N6035	254
2N6036	197
2N6037	184
2N6038	184
2N6039	253
2N6040	262
2N6041	262
2N6042	260
2N6043	261
2N6044	261
2N6045	259

To Be Replaced	ECG Replacement
2N6049	218
2N6050	248
2N6051	248
2N6052	248
2N6053	244
2N6054	244
2N6055	243
2N6056	243
2N6057	247
2N6058	247
2N6059	247
2N6068	5600
2N6069	5601
2N6070	5602
2N6071	5603
2N6072	5604
2N6073	5605
2N6074	5606
2N6075	5607
2N6076	159
2N6079	384
2N6080	348
2N6081	350
2N6082	351
2N6083	351
2N6084	320
2N6094	353
2N6095	354
2N6096	355
2N6097	356
2N6099	377
2N6101	377
2N6106	197
2N6107	197
2N6108	197
2N6109	197
2N6110	197
2N6111	197
2N6121	152
2N6122	152
2N6123	152
2N6124	153
2N6125	153
2N6126	153
2N6132	197
2N6133	197
2N6134	197
2N6139	5663
2N6140	5665
2N6141	5667
2N6146	5675
2N6151	5614
2N6152	5616
2N6153	5618
2N6154	5624
2N6155	5626
2N6156	5628
2N6160	5693
2N6161	5695
2N6162	5697
2N6164	5695
2N6165	5697
2N6167	5673
2N6169	5675
2N6172	5562
2N6173	5564
2N6174	5566
2N6175	228
2N6176	157
2N6177	228
2N6198	357
2N6199	359
2N6200	360
2N6211	162
2N6213	162
2N6214	167
2N6226	281
2N6227	281
2N6228	281
2N6229	281
2N6231	281
2N6236	5421
2N6237	5422
2N6238	5423
2N6239	5414
2N6240	5415
2N6241	5416
2N6246	219
2N6247	219
2N6253	130
2N6254	181
2N6257	181
2N6258	181
2N6259	284
2N6260	175
2N6261	175
2N6262	284
2N6263	175
2N6264	286
2N6277	387
2N6282	251
2N6283	251
2N6284	251
2N6285	250
2N6286	250
2N6287	250
2N6288	196
2N6291	196
2N6292	196
2N6294	274
2N6295	274
2N6296	275
2N6297	275
2N6298	244
2N6299	244

To Be Replaced	ECG Replacement
2N6300	243
2N6301	243
2N6302	284
2N6304	316
2N6305	316
2N6306	283
2N6307	283
2N6308	283
2N6326	181
2N6327	181
2N6328	181
2N6329	180
2N6338	327
2N6339	327
2N6340	327
2N6341	327
2N6342	56004
2N6342A	56004
2N6343	56006
2N6343A	56006
2N6344	56008
2N6344A	56008
2N6345	56010
2N6345A	56010
2N6346	56004
2N6346A	56004
2N6347	56006
2N6347A	56006
2N6348	56008
2N6348A	56008
2N6349	56010
2N6349A	56010
2N6354	328
2N6355	251
2N6356	251
2N6357	247
2N6358	251
2N6359	284
2N6360	284
2N6371	130
2N6372	384
2N6373	384
2N6374	384
2N6383	245
2N6384	245
2N6385	245
2N6386	263
2N6387	263
2N6388	263
2N6389	316
2N6430	287
2N6431	287
2N6432	288
2N6433	288
2N6459	335
2N6467	292
2N6468	292
2N6473	291
2N6474	291
2N6475	292
2N6476	292
2N6477	292
2N6478	292
2N6492	243
2N6493	243
2N6494	243
2N6496	328
2N6497	379
2N6498	379
2N6499	379
2N6500	175
2N6504	5550
2N6505	5552
2N6506	5552
2N6507	5554
2N6508	5556
2N6509	5558
2N6510	283
2N6511	283
2N6512	283
2N6513	283
2N6514	283
2N6542	283
2N6543	283
2N6544	283
2N6558	191
2N6569	130
2N6573	283
2N6574	283
2N6575	283
2N6576	249
2N19616	160
2N51422	159
2NJ5A	100
2NJ6	100
2NJ8A	100
2NJ9A	102
2NJ9D	102
2NJ33B	312
2NJ50	126
2NJ51	126
2NJ52	126
2NJ53	126
2NJ233B	312
2NS31	102
2NS32	102
2NS121	102
2NSM-1	125
2OA90	110
2OC72	158
2P1M	5444
2P2M	5455
2P2150M	177
2PB187	102A
2R9.1	5124A

To Be Replaced	ECG Replacement
2R9.1A	5124A
2R9.1B	5124A
2R10	5125A
2R10A	5125A
2R10B	5125A
2R11	5126A
2R11A	5126A
2R11B	5126A
2R12	5127A
2R12A	5127A
2R12B	5127A
2R13	5128A
2R13A	5128A
2R13B	5128A
2R15	5130A
2R15A	5130A
2R15B	5130A
2R16	5131A
2R16A	5131A
2R16B	5131A
2R18	5133A
2R18A	5133A
2R18B	5133A
2R20	5135A
2R20A	5135A
2R20B	5135A
2R22	5136A
2R22A	5136A
2R22B	5136A
2R24	5137A
2R24A	5137A
2R24B	5137A
2R27	5139A
2R27A	5139A
2R27B	5139A
2R30	5141A
2R30A	5141A
2R30B	5141A
2R33	5142A
2R33A	5142A
2R33B	5142A
2R36	5143A
2R36A	5143A
2R36B	5143A
2R39	5144A
2R39A	5144A
2R39B	5144A
2R43	5145A
2R43A	5145A
2R43B	5145A
2R47	5146A
2R47A	5146A
2R47B	5146A
2R51	5147A
2R51A	5147A
2R51B	5147A
2R56	5148A
2R56A	5148A
2R56B	5148A
2R62B	5150A
2R68	5151A
2R68A	5151A
2R68B	5151A
2R75	5152A
2R75A	5152A
2R75B	5152A
2R91	5155A
2R91A	5155A
2R91B	5155A
2R100	5156A
2R100A	5156A
2R100B	5156A
2R110	5157A
2R110A	5157A
2R110B	5157A
2R120	5158A
2R120A	5158A
2R120B	5158A
2R130	5159A
2R130A	5159A
2R130B	5159A
2R140	5160A
2R140A	5160A
2R140B	5160A
2R150	5161A
2R150A	5161A
2R150B	5161A
2R160	5162A
2R160A	5162A
2R160B	5162A
2R180	5164A
2R180A	5164A
2R180B	5164A
2R200	5166A
2R200A	5166A
2R200B	5166A
2RB240	116
2S001	123
2S002	123
2S003	123
2S004	123
2S005	123A
2S006	108
2S014	128
2S017	128
2S018	128
2S019	128
2S020	128
2S021	129
2S022	129
2S023	129
2S033	130
2S034	130
2S035	162
2S036	162

To Be Replaced	ECG Replacement
2S1K	116
2S12	100
2S13	100
2S14	102
2S15	102
2S15A	102
2S-16E	116
2S22	102
2S24	102
2S25	100
2S26	121
2S26A	121
2S30	100
2S31	100
2S32	102
2S33	102
2S34	102
2S35	126
2S36	126
2S37	102
2S38	102
2S39	102
2S40	102
2S41	104
2S41A	104
2S42	104
2S43	102
2S44	102
2S45	100
2S46	102
2S47	102
2S49	100
2S51	100
2S52	100
2S53	100
2S54	102
2S56	102
2S58	126
2S60	100
2S82	107
2S91	100
2S92	100
2S92A	100
2S93	100
2S93A	100
2S95A	123A
2S96	126
2S97	126
2S98	126
2S101	123A
2S102	123A
2S103	128
2S104	128
2S109	126
2S110	126
2S111	100
2S112	126
2S131	123A
2S141	126
2S142	126
2S143	126
2S145	126
2S146	126
2S155	100
2S159	100
2S160	100
2S163	102
2S167	100
2S174	100
2S176	126
2S178	100
2S179	102
2S189	102A
2S273	102A
2S301	129
2S302	129
2S302A	129
2S303	129
2S304	129
2S306	159
2S307	159
2S321	159
2S322	159
2S322A	159
2S323	159
2S324	159
2S326	159
2S327	159
2S501	123A
2S502	123A
2S503	123A
2S512	108
2S673C	159
2S701	123
2S702	123
2S703	123
2S711	123
2S712	123
2S731	123A
2S732	123A
2S733	123A
2S741	128
2S741A	123A
2S742	128
2S742A	128
2S743	154
2S743A	154
2S744	128
2S744A	123A
2S745	128
2S745A	154
2S746	154
2S746A	154
2S1454	162
2S1718/4454C	140A

To Be Replaced	ECG Replacement
2S2114A	138A
2S2692	519
2S3010	129
2S3020	159
2S3021	159
2S3030	159
2S3040	159
2S3210	159
2S3220	159
2S3221	159
2S3230	159
2S3240	159
2S10032	177
2SA5I5(BK)	124
2SA12	102A
2SA12A	102A
2SA12B	102A
2SA12C	102A
2SA12D	102A
2SA12H	102A
2SA12V	102A
2SA13	160
2SA14	160
2SA15	102A
2SA15BK	102A
2SA15BL	102A
2SA15BLU	102A
2SA15H	102A
2SA15K	102A
2SA15R	102A
2SA15U	102A
2SA15V	102A
2SA15VR	102A
2SA15Y	102A
2SA16	102A
2SA17	102A
2SA17H	102A
2SA18	102A
2SA18H	102A
2SA19	126
2SA20	126
2SA21	126
2SA26	100
2SA28	126
2SA29	126
2SA30	126
2SA31	100
2SA32	102A
2SA33	102A
2SA35	126
2SA36	100
2SA37	126
2SA38	126
2SA39	126
2SA40	100
2SA41	160
2SA42	160
2SA43	126
2SA44	100
2SA45	126
2SA45-1	126
2SA45-2	126
2SA45-3	126
2SA49	126
2SA50	102A
2SA51	160
2SA52	126
2SA53	126
2SA54	160
2SA55	100
2SA56	160
2SA57	126
2SA58	126
2SA59	126
2SA60	126
2SA61	160
2SA64	102A
2SA65	102A
2SA66	102A
2SA67	126
2SA69	126
2SA70	160
2SA70F	160
2SA70L	160
2SA70MA	160
2SA71	126
2SA71A	126
2SA71AB	126
2SA71AC	126
2SA71B	126
2SA71BS	126
2SA71D	126
2SA71Y	126
2SA72	126
2SA72BLU	126
2SA72BLU-BLU	126
2SA72BRN	126
2SA72ORN	126
2SA72WHT	126
2SA73	160
2SA74	160
2SA75	126
2SA75B	126
2SA76	126
2SA77	126
2SA77A	126
2SA77B	126
2SA77C	126
2SA77D	126
2SA78	126
2SA78B	126
2SA78C	126
2SA78D	126
2SA79	160
2SA80	126

To Be Replaced	ECG Replacement
2SA81	160
2SA82	126
2SA83	126
2SA84	160
2SA85	126
2SA86	160
2SA87	126
2SA88	160
2SA89	160
2SA90	126
2SA92	126
2SA93	126
2SA94	126
2SA100	126
2SA100A	102A
2SA100B	126
2SA100C	126
2SA101	126
2SA101A	126
2SA101AA	126
2SA101AY	126
2SA101B	126
2SA101BA	126
2SA101BB	126
2SA101BC	126
2SA101BX	126
2SA101C	126
2SA101CA	126
2SA101CV	126
2SA101CX	126
2SA101E	126
2SA101QA	126
2SA101V	126
2SA101X	126
2SA101Y	126
2SA101Z	126
2SA102	126
2SA102A	126
2SA102AA	126
2SA102AB	126
2SA102B	126
2SA102BA	126
2SA102BN	126
2SA102CA	126
2SA102TV	126
2SA103	126
2SA103A	126
2SA103B	126
2SA103C	126
2SA103CA	126
2SA103CAK	126
2SA103CG	126
2SA103DA	126
2SA103K	126
2SA104	126
2SA104D	126
2SA104P	126
2SA105	160
2SA106	160
2SA107	160
2SA108	126
2SA109	126
2SA110	126
2SA111	126
2SA112	126
2SA113	126
2SA114	102A
2SA115	102A
2SA116	102A
2SA117	160
2SA118	160
2SA119	129
2SA120	129
2SA120A	129
2SA121	126
2SA122	126
2SA123	126
2SA124	126
2SA125	126
2SA126	160
2SA127	160
2SA128	158
2SA129	158
2SA130	160
2SA131	126
2SA132	126
2SA133	126
2SA134	126
2SA135	160
2SA136	126
2SA137	126
2SA138	102A
2SA139	126
2SA141	126
2SA141B	126
2SA141C	126
2SA142	126
2SA142A	126
2SA142B	126
2SA142C	126
2SA143	126
2SA144	126
2SA144C	126
2SA145	126
2SA145A	126
2SA145C	126
2SA146	100
2SA147	100
2SA148	100
2SA149	100
2SA150	126
2SA151	160
2SA152	160
2SA153	126
2SA154	126

To Be Replaced	ECG Replacement
2SA155	126
2SA156	126
2SA157	126
2SA159	126
2SA160	100
2SA161	126
2SA162	126
2SA163	126
2SA164	126
2SA165	126
2SA166	126
2SA167	100
2SA168	100
2SA168A	100
2SA169	100
2SA170	100
2SA171	100
2SA172	100
2SA172A	100
2SA173	102A
2SA173B	102A
2SA174	102
2SA175	126
2SA176	126
2SA180	160
2SA181	102A
2SA182	100
2SA183	102A
2SA187TV	102A
2SA188	126
2SA189	126
2SA197	102
2SA198	100
2SA201	126
2SA201-0	126
2SA201A	126
2SA201B	126
2SA201E	126
2SA201N	126
2SA201TV	126
2SA201TVO	126
2SA202	126
2SA202A	126
2SA202B	126
2SA202C	126
2SA202D	126
2SA203	126
2SA203A	126
2SA203AA	126
2SA203B	126
2SA203P	126
2SA204	100
2SA205	100
2SA206	100
2SA207	100
2SA208	100
2SA209	100
2SA210	100
2SA211	100
2SA212	100
2SA213	126
2SA214	126
2SA215	160
2SA216	126
2SA217	100
2SA218	160
2SA219	160
2SA220	160
2SA221	160
2SA222	160
2SA223	160
2SA224	160
2SA225	160
2SA226	160
2SA227	160
2SA228	160
2SA229	160
2SA230	160
2SA231	158
2SA232	158
2SA233	160
2SA233A	160
2SA233B	160
2SA233C	160
2SA234	160
2SA234A	160
2SA234B	160
2SA234C	160
2SA235	160
2SA235A	160
2SA235B	160
2SA235C	160
2SA236	126
2SA237	126
2SA238	126
2SA239	160
2SA240	160
2SA240A	160
2SA240B	160
2SA240B2	160
2SA240BL	160
2SA241	160
2SA242	160
2SA243	160
2SA244	160
2SA245	160
2SA246	126
2SA246V	126
2SA247	126
2SA248	100
2SA250	126
2SA251	126
2SA252	126
2SA253	126
2SA254	126

To Be Replaced	ECG Replacement
2SA255	126
2SA256	126
2SA257	126
2SA258	126
2SA259	126
2SA260	126
2SA261	126
2SA262	126
2SA263	126
2SA264	126
2SA265	126
2SA266	126
2SA267	126
2SA268	126
2SA269	126
2SA270	126
2SA271	126
2SA272	126
2SA273	126
2SA274	126
2SA275	126
2SA276	160
2SA277	100
2SA278	100
2SA279	100
2SA280	126
2SA281	126
2SA282	100
2SA283	100
2SA284	100
2SA285	160
2SA286	160
2SA287	160
2SA288	126
2SA288A	126
2SA289	126
2SA290	126
2SA291	126
2SA292	126
2SA293	126
2SA294	126
2SA295	126
2SA296	160
2SA297	160
2SA298	160
2SA301	126
2SA302	102A
2SA303	102A
2SA304	102A
2SA305	100
2SA306	160
2SA307	160
2SA308	126
2SA309	126
2SA310	126
2SA311	100
2SA312	100
2SA313	126
2SA314	126
2SA315	126
2SA316	126
2SA321	160
2SA322	160
2SA322K	100
2SA323	160
2SA324	160
2SA324F	160
2SA325	126
2SA326	126
2SA327	160
2SA329	126
2SA329A	126
2SA329B	126
2SA330	100
2SA331	126
2SA332	100
2SA335	126
2SA337	126
2SA338	126
2SA339	126
2SA340	160
2SA341	160
2SA341-OA	160
2SA341-OB	160
2SA342	160
2SA342A	160
2SA343	126
2SA344	126
2SA345	160
2SA346	160
2SA347	160
2SA348	160
2SA349	160
2SA350	126
2SA350A	126
2SA350C	126
2SA350H	126
2SA350R	126
2SA350T	126
2SA350TY	126
2SA350Y	126
2SA351	126
2SA351A	126
2SA351B	126
2SA351GR	126
2SA352	126
2SA352A	126
2SA352B	126
2SA353	126
2SA353A	126
2SA353-AC	126
2SA353C	126
2SA354	126
2SA354A	126
2SA354B	126

To Be Replaced	ECG Replacement
2SA355	126
2SA355A	126
2SA356	126
2SA357	126
2SA358	126
2SA359	126
2SA360	160
2SA361	160
2SA362	160
2SA363	160
2SA364	126
2SA365	126
2SA366	126
2SA367	126
2SA368	126
2SA369	126
2SA372	160
2SA373	160
2SA374	102A
2SA375	160
2SA376	126
2SA377	160
2SA378	160
2SA379	160
2SA380	126
2SA381	126
2SA382	126
2SA383	126
2SA384	126
2SA385	126
2SA385A	126
2SA385D	126
2SA391	126
2SA392	126
2SA393	126
2SA393A	126
2SA394	126
2SA395	126
2SA396	102
2SA397	102
2SA398	126
2SA399	126
2SA400	126
2SA401	160
2SA402	159
2SA403	160
2SA404	160
2SA405	160
2SA406	102A
2SA407	102A
2SA408	160
2SA409	160
2SA410	160
2SA411	160
2SA412	126
2SA413	160
2SA414	100
2SA415	100
2SA416	121
2SA417	160
2SA419	160
2SA420	160
2SA421	160
2SA422	160
2SA425	160
2SA426	160
2SA427	126
2SA428	126
2SA429	288
2SA429-O	288
2SA429R	288
2SA429Y	288
2SA430	160
2SA431	160
2SA431A	160
2SA432	160
2SA432A	160
2SA433	160
2SA434	160
2SA435	160
2SA435A	160
2SA435B	160
2SA436	126
2SA437	126
2SA438	126
2SA440	160
2SA440A	160
2SA446	126
2SA447	126
2SA448	160
2SA450	160
2SA450H	160
2SA451	160
2SA451H	160
2SA452	160
2SA452H	160
2SA453	126
2SA454	126
2SA455	126
2SA456	126
2SA457	126
2SA460	160
2SA461	160
2SA462	160
2SA463	160
2SA464	160
2SA466	126
2SA466-2	126
2SA466-3	126
2SA466BLK	126
2SA466BLU	126
2SA466YEL	126
2SA467	159
2SA467-0	159
2SA467G	159

To Be Replaced	ECG Replacement
2SA467G-0	159
2SA467G-R	159
2SA467G-Y	159
2SA467-Y	159
2SA468	126
2SA469	126
2SA470	126
2SA471	126
2SA471-1	126
2SA471-2	126
2SA471-3	126
2SA472	126
2SA472A	126
2SA472B	126
2SA472C	126
2SA472D	126
2SA472E	126
2SA473	153
2SA473-GR	153
2SA473-O	153
2SA473-R	153
2SA473-Y	153
2SA473Y	153
2SA474	126
2SA476	126
2SA477	126
2SA478	126
2SA479	126
2SA480	159
2SA482	159
2SA483	218
2SA484	323
2SA485	129
2SA489	153
2SA489-O	153
2SA489-R	153
2SA489-Y	153
2SA490	153
2SA490-0	153
2SA490-LBGL1	153
2SA490-O	292
2SA490(Power)	153
2SA490Y	153
2SA490YLBG11	153
2SA493	159
2SA493BL	234
2SA493GR	159
2SA493Y	159
2SA494	159
2SA494-GR	159
2SA494-O	159
2SA494-Y	159
2SA495	159
2SA495-0	159
2SA495A	159
2SA495D	159
2SA495-G	159
2SA495G-GR	159
2SA495G-O	159
2SA495G-R	159
2SA495G-Y	159
2SA495GR	159
2SA495H	159
2SA495J	159
2SA495-O	159
2SA495O	159
2SA495-O	159
2SA495Q	159
2SA495-R	159
2SA495R	159
2SA495TM-0	159
2SA495W	159
2SA495-Y	159
2SA495Y	159
2SA496	185
2SA496-O	185
2SA496-R	185
2SA496-Y	185
2SA496Y	185
2SA497	129
2SA497R	129
2SA498	129
2SA498Y	129
2SA499	159
2SA499-O	159
2SA499-R	159
2SA499-Y	159
2SA500	159
2SA500-O	159
2SA500-R	159
2SA500-Y	159
2SA501	129
2SA502	159
2SA503	129
2SA503GR	211
2SA503-O	129
2SA503-R	129
2SA503-Y	129
2SA504	129
2SA504GR	129
2SA504-O	129
2SA504-R	129
2SA504-Y	129
2SA505	185
2SA505-O	185
2SA505-R	185
2SA505-Y	185
2SA506	160
2SA507	160
2SA508	160
2SA509	290
2SA509-0	290
2SA509A	290
2SA509GR	290

To Be Replaced	ECG Replacement
2SA509-O	290
2SA509Q	290
2SA509-R	290
2SA509Y	290
2SA509-Y	290
2SA510	159
2SA510-O	159
2SA510-R	159
2SA511	159
2SA511-O	159
2SA511-R	159
2SA512	159
2SA512-O	159
2SA512-R	159
2SA513	159
2SA513-O	159
2SA513-R	159
2SA515	124
2SA515(BK)	124
2SA516	129
2SA516A	129
2SA517	126
2SA518	126
2SA522	159
2SA522A	159
2SA523	129
2SA523A	129
2SA524	106
2SA525	160
2SA525A	160
2SA525B	160
2SA527	129
2SA528	129
2SA530	159
2SA530H	159
2SA532	129
2SA532A	129
2SA532B	129
2SA532C	129
2SA532D	129
2SA532E	129
2SA532F	129
2SA537	129
2SA537A	129
2SA537AA	129
2SA537AB	129
2SA537AC	129
2SA537AH	129
2SA537B	129
2SA537C	129
2SA537H	129
2SA538	102A
2SA539	159
2SA539K	159
2SA539L	159
2SA539M	159
2SA539S	159
2SA542	159
2SA544	159
2SA545	193A
2SA545GRN	193A
2SA545K	193A
2SA545KLM	193A
2SA545L	193A
2SA545LM	193A
2SA545M	193
2SA546	129
2SA546A	129
2SA546AK	292
2SA546AL	292
2SA546B	129
2SA546E	129
2SA546H	129
2SA547	129/427
2SA547A	129/427
2SA548	129
2SA549A	288
2SA549AH	288
2SA550	159
2SA550A	159
2SA550AQ	159
2SA550AR	159
2SA550AS	159
2SA550P	159
2SA550Q	159
2SA550R	159
2SA550S	159
2SA551	129
2SA551C	129
2SA551D	129
2SA551E	129
2SA552	129
2SA553	129
2SA554	129
2SA554A	129
2SA555	294
2SA558	129
2SA559	129
2SA559A	129
2SA560	129
2SA561	159
2SA561GR	159
2SA561-O	159
2SA561-R	159
2SA561R	159
2SA561-Y	159
2SA561Y	159
2SA562	290
2SA562-0	290
2SA562G	290
2SA562GR	290
2SA562-O	290
2SA562R	290
2SA562Y	290
2SA562-Y	290

To Be Replaced	ECG Replacement
2SA564	234
2SA564-0	234
2SA564A	234
2SA564ABQ	234
2SA564AO	234
2SA564AP	234
2SA564AQ	234
2SA564AQGD	234
2SA564AR	234
2SA564AS	234
2SA564AT	234
2SA564D	234
2SA564F	234
2SA564FQ	234
2SA564FR	234
2SA564G	234
2SA564H	234
2SA564J	234
2SA564-O	234
2SA564P	234
2SA564POR	234
2SA564PQ	234
2SA564PQR	234
2SA564Q	234
2SA564-Q	234
2SA564QGD	234
2SA564QHD	234
2SA564QR	234
2SA564R	234
2SA564S	234
2SA564T	234
2SA564Y	234
2SA565	159
2SA565A	159
2SA565B	159
2SA565C	159
2SA565D	159
2SA565K	159
2SA566	218
2SA566A	218
2SA566B	218
2SA566C	218
2SA566H	218
2SA567	159
2SA568	159
2SA568B	159
2SA568C	159
2SA568D	159
2SA568E	159
2SA568F	159
2SA568G	159
2SA568GN	159
2SA568H	159
2SA568J	159
2SA568K	159
2SA568L	159
2SA568M	159
2SA568-OR	159
2SA568R	159
2SA568X	159
2SA568Y	159
2SA569	159
2SA569J	159
2SA570	159
2SA571	129
2SA572	234
2SA573A	290
2SA573D	290
2SA575K	298
2SA575L	298
2SA578	234
2SA578A	234
2SA578B	234
2SA578C	234
2SA579	234
2SA579A	234
2SA579B	234
2SA579C	234
2SA592Y	159
2SA594	129
2SA594-O	129
2SA594-R	129
2SA594-Y	129
2SA595C	129
2SA597	129
2SA603	159
2SA604	129
2SA606	129
2SA606S	129
2SA607	129/400
2SA607A	129/400
2SA607B	129/400
2SA607C	129/400
2SA607D	129/400
2SA607K	129/400
2SA607L	129/400
2SA607M	129/400
2SA607N	129/400
2SA607S	129/400
2SA607SA	129/400
2SA607SB	129/400
2SA607SC	129/400
2SA607SD	129/400
2SA608	159
2SA608A	159
2SA608B	159
2SA608C	159
2SA608-C	159
2SA608D	159
2SA608-D	159
2SA608E	159
2SA608-E	159
2SA608E-NP	159
2SA608F	159
2SA608-F	159

To Be Replaced	ECG Replacement
2SA608F-NF	159
2SA608F-NP	159
2SA608G	159
2SA608NP	159
2SA609	159
2SA609A	159
2SA609B	159
2SA609C	159
2SA609D	159
2SA609E	159
2SA609F	159
2SA609G	159
2SA610	159
2SA610B	159
2SA611	159
2SA611-4E	159
2SA612	129
2SA613	218
2SA614	218
2SA616	218
2SA616(1)	218
2SA616(2)	218
2SA617K	159
2SA618K	159
2SA620	234
2SA620WL	234
2SA623	307
2SA623-0	307
2SA623A	307
2SA623B	307
2SA623C	307
2SA623D	307
2SA623G	307
2SA623R	307
2SA623Y	307
2SA624	307
2SA624A	307
2SA624B	307
2SA624C	307
2SA624D	307
2SA624E	307
2SA624G	307
2SA624GN	307
2SA624L	307
2SA624LG	307
2SA624R	307
2SA624Y	307
2SA626	219
2SA626K	219
2SA626L	219
2SA626M	219
2SA626N	219
2SA627	219
2SA627K	219
2SA627L	219
2SA627M	219
2SA627N	219
2SA628	159
2SA628A	159
2SA628AD	159
2SA628AE	159
2SA628AF	159
2SA628C	159
2SA628D	159
2SA628E	159
2SA628EF	159
2SA628F	159
2SA629	159
2SA634	187A
2SA634A	187A
2SA634B	187A
2SA634C	187A
2SA634D	187A
2SA634K	187A
2SA634L	187A
2SA634M	187A
2SA636	187A
2SA636(4)K	187
2SA636(4)L	187
2SA636A	187A
2SA636B	187A
2SA636C	187A
2SA636D	187A
2SA636K	187A
2SA636L	187A
2SA636M	187A
2SA637	159
2SA638	288
2SA639	288
2SA639S	288
2SA640	159
2SA640A	159
2SA640B	159
2SA640C	159
2SA640D	159
2SA640E	159
2SA640F	159
2SA640L	159
2SA640M	159
2SA640S	159
2SA641	234
2SA641A	234
2SA641B	234
2SA641C	234
2SA641D	234
2SA641L	234
2SA641M	234
2SA642	159
2SA642A	159
2SA642B	159
2SA642C	159
2SA642D	159
2SA642E	159
2SA642F	159
2SA642L	294

To Be Replaced	ECG Replacement
2SA642R	159
2SA642S	159
2SA642V	290
2SA642W	159
2SA642Y	290
2SA643	193A
2SA643A	193A
2SA643B	193A
2SA643C	193A
2SA643D	193A
2SA643E	193A
2SA643F	193A
2SA643R	193A
2SA643V	193A
2SA643W	193A
2SA645	211
2SA646	187A
2SA648	219
2SA648A	219
2SA648B	219
2SA648C	219
2SA656	187A
2SA656A	281
2SA656L	187A
2SA656M	187A
2SA657	219
2SA657A	219
2SA658	219
2SA658A	218
2SA659	159
2SA659A	159
2SA659B	159
2SA659C	159
2SA659D	159
2SA659E	159
2SA659F	159
2SA659G	159
2SA659L	159
2SA659P	159
2SA659R	159
2SA659Y	159
2SA661	298
2SA661GR	298
2SA661-O	298
2SA661R	298
2SA661Y	298
2SA663	219
2SA666	234
2SA666A	234
2SA666H	234
2SA666HR	234
2SA666Q	234
2SA666QRS	234
2SA666R	234
2SA666S	234
2SA670	153
2SA670A	153
2SA670B	153
2SA670C	153
2SA671	292
2SA671-0	153
2SA671A	292
2SA671B	292
2SA671C	292
2SA671K	292
2SA671KA	292
2SA671KB	292
2SA671KC	292
2SA672	159
2SA672A	159
2SA672B	159
2SA672C	159
2SA673	290
2SA673-0	290
2SA673A	290
2SA673AA	290
2SA673AB	290
2SA673AC	290
2SA673AD	290
2SA673AE	290
2SA673AS	290
2SA673ASC	290
2SA673B	290
2SA673(B)	290
2SA673C	290
2SA673C2	294
2SA673D	290
2SA673-O	290
2SA673WT	294
2SA675	159
2SA675A	159
2SA675B	159
2SA675C	159
2SA677	159
2SA677HL	159
2SA678	159
2SA678(C)	159
2SA678E	159
2SA678HL	159
2SA678(SONY)	159
2SA679	281
2SA679B	294
2SA679R	281
2SA679Y	281
2SA680	281
2SA680R	281
2SA680Y	281
2SA682	183
2SA682-0	183
2SA682-Y	183
2SA683	294
2SA683P	294
2SA683Q	294
2SA683R	294
2SA683RS	294

To Be Replaced	ECG Replacement
2SA683S	294
2SA684	294
2SA684Q	294
2SA684R	294
2SA685	159
2SA690D	159
2SA695	298
2SA695C	298
2SA695D	298
2SA695E	298
2SA696	288
2SA696A	288
2SA696C	288
2SA696D	288
2SA696E	288
2SA697	294
2SA697C	294
2SA697D	294
2SA697E	294
2SA699	187A
2SA699-0	187A
2SA699A	187A
2SA699A-Q	187A
2SA699AO	187A
2SA699AP	187A
2SA699AQ	187A
2SA699AR	187A
2SA699-O	187A
2SA699P	187A
2SA699PF	187A
2SA699Q	187A
2SA699R	187A
2SA700	187A
2SA700B	187A
2SA700Y	187A
2SA701	159
2SA701F	159
2SA701FJ	159
2SA701FO	159
2SA702	234
2SA703	307
2SA703C	307
2SA703D	307
2SA703E	307
2SA706	211
2SA706H	211
2SA707	298
2SA707V	298
2SA708	129
2SA708A	129
2SA708B	129
2SA708C	129
2SA715	185
2SA715A	185
2SA715B	185
2SA715C	185
2SA715D	185
2SA715WB	185
2SA715WBP	187A
2SA715WT	185
2SA715WT-B	185
2SA715WT-C	185
2SA715WT-D	185
2SA715WTA	185
2SA715WTB	185
2SA715WTC	185
2SA715WTD	185
2SA717	211
2SA718	159
2SA719	290
2SA719-0	290
2SA719A	290
2SA719B	290
2SA719K	290
2SA719P	290
2SA719PQ	290
2SA719PQR	290
2SA719Q	290
2SA719QR	290
2SA719R	290
2SA719RS	290
2SA719S	290
2SA719W	290
2SA720	298
2SA720P	298
2SA720Q	298
2SA720R	298
2SA720S	298
2SA721	234
2SA721S	234
2SA721T	234
2SA721U	234
2SA722	234
2SA722S	234
2SA722T	234
2SA722U	234
2SA723	159
2SA723A	159
2SA723B	159
2SA723C	159
2SA723D	159
2SA723E	159
2SA723F	159
2SA723R	159
2SA725	234
2SA725F	234
2SA725G	234
2SA725H	234
2SA726	234
2SA726F	234
2SA726G	234
2SA726H	234
2SA730	159
2SA731	159
2SA733	294

To Be Replaced	ECG Replacement
2SA733A	294
2SA733AQ	294
2SA733B	294
2SA733C	294
2SA733D	294
2SA733E	294
2SA733F	294
2SA733H	294
2SA733I	294
2SA733IQ	294
2SA733K	294
2SA733P	294
2SA733(P)	294
2SA733P1	294
2SA733P2	294
2SA733PQ	294
2SA733Q	294
2SA733QP	294
2SA733R	294
2SA734	129
2SA735	159
2SA736	129
2SA738	185
2SA738B	185
2SA738C	185
2SA738D	185
2SA740	292
2SA740A	292
2SA740AB	292
2SA742	129
2SA743	185
2SA743A	185
2SA743AA	185
2SA743AB	185
2SA743AC	185
2SA743AD	185
2SA743B	185
2SA743C	185
2SA743D	185
2SA744	219
2SA745	281
2SA746	219
2SA747	285
2SA747A	285
2SA748Q	153
2SA748R	153
2SA749	288
2SA749A	288
2SA751	193A
2SA751P	193A
2SA751Q	193A
2SA751QR	193A
2SA751R	193A
2SA751S	193A
2SA752	193A
2SA752P	193A
2SA752Q	193A
2SA752R	193A
2SA752S	193A
2SA753	281
2SA753A	281
2SA753B	281
2SA753C	281
2SA754	153
2SA754A	153
2SA754B	153
2SA754C	153
2SA754D	153
2SA755	153
2SA755A	153
2SA755B	153
2SA755C	153
2SA755D	153
2SA756	281
2SA756A	281
2SA756B	281
2SA756C	281
2SA757	281
2SA757A	281
2SA757B	281
2SA757C	281
2SA758	281
2SA758A	281
2SA758B	281
2SA758C	281
2SA763	234
2SA763-W	234
2SA763WL	234
2SA763-WL-3	234
2SA763-WL-4	234
2SA763-WL-5	234
2SA763-WL-6	234
2SA763-WN	234
2SA763-WN-3	234
2SA763-WN-4	234
2SA763-WN-5	234
2SA763-WN-6	234
2SA763-Y	234
2SA763-YL	234
2SA763-YL-3	234
2SA763-YL-4	234
2SA763-YL-5	234
2SA763-YL-6	234
2SA763-YN	234
2SA763-YN-3	234
2SA763-YN-4	234
2SA763-YN-5	234
2SA763-YN-6	234
2SA764	218
2SA765	218
2SA766S	153
2SA768	153
2SA768-0	153
2SA768F	153
2SA768Y	153

To Be Replaced	ECG Replacement
2SA772	294
2SA772J	294
2SA772JN	294
2SA773	129
2SA774	234
2SA774A	234
2SA775	292
2SA775A	292
2SA775AA	292
2SA775AB	292
2SA775AC	292
2SA775B	292
2SA775C	292
2SA777	298
2SA777P	298
2SA777Q	298
2SA777R	298
2SA777S	298
2SA778	288
2SA778A	159
2SA778AK	288
2SA778K	288
2SA779	187A
2SA779K	187A
2SA779KB	187A
2SA779KC	187A
2SA779KD	187A
2SA780AK	187A
2SA780AKA	187A
2SA780AKB	187A
2SA780AKC	187A
2SA780AKD	187A
2SA786	159
2SA808	281
2SA814	292
2SA814-0	292
2SA814-Y	292
2SA815	292
2SA815-0	292
2SA815-Y	292
2SA825	234
2SA825Q	234
2SA825R	234
2SA826	159
2SA826P	159
2SA826Q	159
2SA826R	159
2SA826RY	159
2SA826S	159
2SA835	189
2SA835E	189
2SA835H	189
2SA836	129
2SA836C	289
2SA836D	129
2SA836E	129
2SA836F	129
2SA837	281
2SA838	159
2SA838B	159
2SA838C	159
2SA839	292
2SA839-0	292
2SA839R	292
2SA839Y	292
2SA840	294
2SA840H	288
2SA840JC	288
2SA840JD	288
2SA840JM	294
2SA842	234
2SA844	129
2SA844B	129
2SA844C	129
2SA844D	129
2SA844E	129
2SA844F	129
2SA845Q	234
2SA850	298
2SA854	234
2SA854R	234
2SA854RY	234
2SA861	187A
2SA861JK	187A
2SA872	234
2SA872AE	234
2SA872AF	288
2SA872C	234
2SA872D	234
2SA872E	234
2SA872F	234
2SA879	288
2SA879P	288
2SA879Q	288
2SA885R	211
2SA886	185
2SA886NQ	185
2SA886NR	185
2SA886Q	185
2SA886R	185
2SA886V	185
2SA886VQ	185
2SA887Q	187
2SA887R	187
2SA893AE	288
2SA893AF	288
2SA912Q	288
2SA912R	288
2SA912S	288
2SA916K	288
2SA916L	288
2SA916M	288
2SA933	294
2SA940	292
2SA944E	129

To Be Replaced	ECG Replacement
2SA945-0	159
2SA945Y	159
2SA950	159
2SA950-0	129
2SA950-Y	129
2SA952	129
2SA952L	129
2SA962	189
2SA1010V	126
2SA1015Y	129
2SA1028A	126
2SA1226AL	186A
2SA1226AP	186A
2SA1226AQ	186A
2SA1226AR	186A
2SA4950	159
2SA4954	159
2SA4964	185
2SA6661QRS	159
2SA7190	288
2SA7200	159
2SA73301	294
2SA73302	294
2SA-NJ101	159
2SANJ101	159
2SB-2C	506
2SB16A	105
2SB17A	105
2SB18A	105
2SB19	104
2SB20	104
2SB21	104
2SB22	102A
2SB22A	102A
2SB22B	102A
2SB22H	102A
2SB22I	102A
2SB22-0	102A
2SB22R	102A
2SB22Y	102A
2SB23	102A
2SB24	102A
2SB25	121
2SB25B	121
2SB26	104
2SB26A	104
2SB27	104
2SB28	104
2SB29	104
2SB30	104
2SB31	104
2SB32	102A
2SB32-0	102A
2SB32-1	102A
2SB32-2	102A
2SB32-4	102A
2SB32N	102A
2SB33	102A
2SB33-4	102A
2SB33C	102A
2SB33D	102A
2SB33E	102A
2SB33F	102A
2SB34	102
2SB34N	102
2SB37	102A
2SB37A	102A
2SB37B	102A
2SB37C	102A
2SB37E	102A
2SB37F	102A
2SB38	102
2SB39	102A
2SB40	102A
2SB41	104
2SB42	104
2SB43	102A
2SB43A	102A
2SB44	102A
2SB46	102A
2SB47	102A
2SB48	102
2SB49	102
2SB50	102
2SB51	102
2SB52	102
2SB53	102
2SB54	102A
2SB54B	102A
2SB54E	102A
2SB54F	102A
2SB54Y	102A
2SB55	102A
2SB56	102A
2SB56A	102A
2SB56B	102A
2SB56C	102A
2SB57	102A
2SB58	158
2SB59	102A
2SB60	102A
2SB60A	102A
2SB61	102A
2SB62	104
2SB63	131
2SB64	121
2SB65	102A
2SB66	102A
2SB66H	102A
2SB67	102A
2SB67A	102A
2SB69	121
2SB71	102
2SB72	102
2SB73	102A

To Be Replaced	ECG Replacement
2SB73A	102A
2SB73B	102A
2SB73C	102A
2SB73GR	102A
2SB73S	102A
2SB74	160
2SB75	102A
2SB75A	102A
2SB75AH	102A
2SB75B	102A
2SB75C	102A
2SB75F	102A
2SB75H	102A
2SB75LB	102A
2SB76	102A
2SB77	102A
2SB77A	102A
2SB77AA	102A
2SB77AB	102A
2SB77AC	102A
2SB77AD	102A
2SB77AH	102A
2SB77AP	102A
2SB77B	102A
2SB77(B)	102A
2SB77B-11	102A
2SB77C	102A
2SB77D	102A
2SB77H	102A
2SB77V	102A
2SB77VRED	102A
2SB78	102A
2SB79	102A
2SB80	121
2SB81	121
2SB82	121
2SB83	104
2SB84	121
2SB85	102
2SB87	102
2SB89	102A
2SB89A	102A
2SB89AH	102A
2SB89H	102A
2SB90	102A
2SB91	102A
2SB92	102
2SB94	102A
2SB94Z6	102A
2SB95	102
2SB97	102A
2SB98	102
2SB100	102
2SB101	102
2SB102	102
2SB103	100
2SB104	100
2SB105	158
2SB106	158
2SB107	121
2SB107A	121
2SB108	158
2SB108A	158
2SB108B	158
2SB109	158
2SB110	102A
2SB111	102A
2SB111K	102A
2SB112	102A
2SB113	102A
2SB114	102A
2SB115	102A
2SB116	102A
2SB117	102A
2SB117K	102A
2SB119	121
2SB119A	121
2SB120	102A
2SB122	121
2SB123	104
2SB123A	104
2SB124	121
2SB126	121
2SB126A	121
2SB126F	121
2SB126V	121
2SB127	121
2SB127A	121
2SB128	121
2SB128A	121
2SB128V	121
2SB129	121
2SB130	131
2SB130A	131
2SB131	121
2SB131A	121
2SB132	121
2SB132A	121
2SB134	102A
2SB134-D	102A
2SB134E	102A
2SB134-E	102A
2SB135	102A
2SB135B	102A
2SB135C	102A
2SB135E	102A
2SB136	102A
2SB136-2	102A
2SB136-3	102A
2SB136A	102A
2SB136B	102A
2SB136C	102A
2SB136U	102A
2SB137	121
2SB138	121

To Be Replaced	ECG Replacement
2SB140	104
2SB141	104
2SB142	104
2SB142B	104
2SB142C	104
2SB143	104
2SB143P	104
2SB144	104
2SB144P	104
2SB145	104
2SB146	104
2SB147	104
2SB149	104
2SB151	104
2SB152	104
2SB153	102
2SB154	102
2SB155	102A
2SB155A	102A
2SB155B	102A
2SB156	102A
2SB156/7825B	102A
2SB156A	102A
2SB156AA	102A
2SB156AB	102A
2SB156AC	102A
2SB156B	102A
2SB156BC	102A
2SB156C	102A
2SB156D	102A
2SB156P	102A
2SB157	102A
2SB158	102A
2SB159	102A
2SB160	102A
2SB161	102
2SB162	102
2SB163	102
2SB164	102
2SB165	102
2SB166	102
2SB167	158
2SB168	102A
2SB169	102A
2SB170	102A
2SB171	158
2SB171A	158
2SB171B	158
2SB172	158
2SB172A	158
2SB172AF	158
2SB172B	158
2SB172C	158
2SB172D	158
2SB172E	158
2SB172F	158
2SB172H	158
2SB172P	158
2SB172R	158
2SB173	102A
2SB173A	102A
2SB173B	102A
2SB173C	102A
2SB173L	102A
2SB174	102A
2SB175	158
2SB175A	158
2SB175B	158
2SB175C	158
2SB175E	158
2SB176	102A
2SB176B	102A
2SB176M	102A
2SB176-0	102A
2SB176-P	102A
2SB176P	102A
2SB176-PR	102A
2SB176PRC	102A
2SB176R	102A
2SB177	102A
2SB178	102A
2SB178A	102A
2SB178C	102A
2SB178D	102A
2SB178M	102A
2SB178N	102A
2SB178-0	102A
2SB178-S	102A
2SB178S	102A
2SB178T	102A
2SB178U	102A
2SB178V	102A
2SB178X	102A
2SB178Y	102A
2SB180	158
2SB180A	158
2SB181	158
2SB181A	158
2SB183	102A
2SB184	102A
2SB185	102A
2SB185(0)	102A
2SB185AA	102A
2SB185F	102A
2SB185P	102A
2SB186	102A
2SB186(0)	102A
2SB186-1	102A
2SB186A	102A
2SB186AG	102A
2SB186B	102A
2SB186BY	102A
2SB186C	102A
2SB186G	102A
2SB186H	102A

To Be Replaced	ECG Replacement
2SB186-K	102A
2SB186L	102A
2SB186O	102A
2SB186Y	102A
2SB187	102A
2SB187(1)	102A
2SB187AA	102A
2SB187B	102A
2SB187C	102A
2SB187D	102A
2SB187G	102A
2SB187H	102A
2SB187K	102A
2SB187R	102A
2SB187RED	102A
2SB187S	102A
2SB187Y	102A
2SB187YEL	102A
2SB188	102A
2SB189	102A & 410
2SB199	102
2SB200	102
2SB200A	102
2SB201	102A
2SB202	102
2SB203AA	102
2SB204	179
2SB205	179
2SB206	179
2SB215	121
2SB216	121
2SB216A	121
2SB217	121
2SB217A	121
2SB217G	121
2SB217U	121
2SB218	102
2SB219	102
2SB220	102
2SB220A	102
2SB221	102
2SB221A	102
2SB222	102
2SB223	102
2SB224	102
2SB225	102
2SB226	102
2SB227	102
2SB228	104
2SB229	121
2SB230	104
2SB231	127
2SB232	127
2SB233	104
2SB234	127
2SB234N	127
2SB235	105
2SB235A	105
2SB236	105
2SB237	105
2SB237-12A	105
2SB237-12B	105
2SB238	158
2SB238-12A	158
2SB238-12B	158
2SB238-12C	158
2SB239	121
2SB239A	121
2SB240	160
2SB240A	160
2SB241	102
2SB246	104
2SB247	121
2SB248	121
2SB248A	121
2SB249	104
2SB249A	104
2SB250	104
2SB250A	104
2SB251	127
2SB251A	127
2SB252	127
2SB252A	127
2SB253	127
2SB253A	127
2SB254	104
2SB255	104
2SB256	104
2SB257	102
2SB258	105
2SB259	105
2SB260	105
2SB261	102A
2SB262	102A
2SB263	102A
2SB264	102A
2SB265	102A
2SB266	102A
2SB266P	102A
2SB266Q	102A
2SB267	102A
2SB268	102A
2SB269	102A
2SB270	102A
2SB270A	102A
2SB270B	102A
2SB270C	102A
2SB270D	102A
2SB270E	102A
2SB271	102A
2SB272	102A
2SB273	102A
2SB274	127
2SB275	127
2SB276	127

To Be Replaced	ECG Replacement
2SB282	121
2SB283	121
2SB284	121
2SB285	121
2SB290	100
2SB291	100
2SB292	100
2SB292A	100
2SB293	102A
2SB294	102A
2SB295	121
2SB296	127
2SB299	102A
2SB300	127
2SB301	127
2SB302	102A
2SB303	102A
2SB303-0	102A
2SB303A	102A
2SB303B	102A
2SB303C	102A
2SB303H	102A
2SB303K	102A
2SB304	158
2SB304A	158
2SB309	127
2SB310	127
2SB311	127
2SB312	127
2SB313	127
2SB314	100
2SB315	102A
2SB316	102A
2SB317	102A
2SB318	127
2SB319	127
2SB320	127
2SB321	102A
2SB322	102A
2SB323	102A
2SB324	158
2SB324/4454C	158
2SB324A	158
2SB324B	158
2SB324D	158
2SB324E	158
2SB324E-1	158
2SB324F	158
2SB324G	158
2SB324GHI	102A
2SB324H	158
2SB324I	158
2SB324J	158
2SB324K	158
2SB324L	158
2SB324N	158
2SB324P	158
2SB324R	158
2SB324S	158
2SB324V	158
2SB326	102
2SB327	102
2SB328	102
2SB329	102A
2SB329K	102A
2SB331	213
2SB331H	213
2SB331HA	213
2SB331HB	213
2SB331HC	213
2SB332	213
2SB332H	213
2SB332HA	213
2SB332HB	213
2SB332HC	213
2SB333	213
2SB335	102
2SB336	102A
2SB337	121
2SB337A	121
2SB337B	121
2SB337BK	121
2SB337H	121
2SB337HA	121
2SB337HB	121
2SB338	121
2SB338H	121
2SB338HA	121
2SB338HB	121
2SB339	179
2SB339H	179
2SB340	179
2SB340H	179
2SB341	127
2SB341H	127
2SB341S	127
2SB341V	127
2SB342	127
2SB343	127
2SB345	102A
2SB346	102A
2SB346K	102A
2SB346Q	102A
2SB347	102
2SB348	102A
2SB348Q	102A
2SB348R	102A
2SB349	102A
2SB350	102
2SB351	105
2SB352	294
2SB352D	294
2SB353	105
2SB354	105
2SB355	104

To Be Replaced	ECG Replacement
2SB356	104
2SB357	127
2SB358	127
2SB359	127
2SB360	127
2SB361	127
2SB362	127
2SB364	102A & 410
2SB365	158
2SB365B	158
2SB366	102A
2SB367	131
2SB367A	131
2SB367(A)	131
2SB367B	131
2SB367C	131
2SB367H	131
2SB368	131
2SB368A	131
2SB368B	131
2SB368H	131
2SB370	102A
2SB370A	102A
2SB370AA	102A
2SB370AB	102A
2SB370AC	102A
2SB370AHA	102A
2SB370AHB	102A
2SB370B	102A
2SB370C	102A
2SB370D	102A
2SB370P	102A
2SB370PB	102A
2SB370V	102A
2SB371	102A
2SB371D	102A
2SB372	158
2SB373	158
2SB375	127
2SB375-2B	127
2SB375-5B	127
2SB375A	127
2SB375A-2B	127
2SB375A-5B	127
2SB375A-NB	127
2SB375TV	127
2SB376	102A
2SB376G	102A
2SB377	102A
2SB377B	102A
2SB378	102A
2SB378A	102
2SB379	102
2SB379-2	102
2SB379A	102
2SB379B	102
2SB380	102
2SB380A	102
2SB381	102A
2SB382	102A
2SB383	102A
2SB383-1	102A
2SB383-2	102A
2SB384	126
2SB385	126
2SB386	102A
2SB387	100
2SB387A	102A
2SB389	102A
2SB390	127
2SB391	121
2SB392	100
2SB393	100
2SB394	100
2SB395	100
2SB396	100
2SB400	102A
2SB400A	102A
2SB400B	102A
2SB400BL	102A
2SB400K	102A
2SB401	100
2SB402	100
2SB403	100
2SB405	158
2SB405-2C	158
2SB405-3C	158
2SB405-4C	158
2SB405A	158
2SB405B	158
2SB405BR	158
2SB405C	158
2SB405D	158
2SB405E	158
2SB405G	158
2SB405H	158
2SB405K	158
2SB405P	158
2SB405R	158
2SB405RE	158
2SB407	121
2SB407-0	121
2SB407TV	121
2SB408	100
2SB410	127
2SB411	127
2SB413	104
2SB414	104
2SB415	158
2SB415A	158
2SB415B	158
2SB415MP	158(2)
2SB416	100
2SB417	100
2SB422	102

To Be Replaced	ECG Replacement
2SB423	102
2SB424	121
2SB425	127
2SB425Y	127
2SB426	121
2SB426BL	121
2SB426R	121
2SB426Y	121
2SB427	102A
2SB428	102A
2SB430	105
2SB431	158
2SB432	127
2SB433	105
2SB434	153
2SB434-O	153
2SB434-R	153
2SB434-Y	153
2SB435	153
2SB435-0	153
2SB435-O	153
2SB435-R	153
2SB435-Y	153
2SB435Y	153
2SB439	102A
2SB439A	102A
2SB440	102A
2SB443	102A
2SB443A	102A
2SB443B	102A
2SB444	126
2SB444A	126
2SB444B	126
2SB445	121
2SB446	121
2SB447	127
2SB448	131
2SB449	121
2SB449F	121
2SB449P	121
2SB450	158
2SB450A	158
2SB451	158
2SB452	158
2SB452A	158
2SB453	158
2SB454	158
2SB455	158
2SB457	158
2SB457A	158
2SB457AC	158
2SB457-C	158
2SB458	131
2SB458A	131
2SB459	102A
2SB459A	102A
2SB459B	102A
2SB459C	102A
2SB459D	102A
2SB459-O	102A
2SB460	102A
2SB460A	102A
2SB460B	102A
2SB461	176
2SB462	131
2SB463	131
2SB463BL	131
2SB463E	131
2SB463R	131
2SB463Y	131
2SB463(Y)	131
2SB464	127
2SB465	127
2SB466	131
2SB467	131
2SB468	127
2SB468A	127
2SB468B	127
2SB468C	127
2SB468D	127
2SB470	102
2SB471	121
2SB471-2	121
2SB471A	121
2SB471B	121
2SB472	121
2SB472A	121
2SB472B	121
2SB473	131
2SB473D	131
2SB473F	131
2SB473H	131
2SB474	226
2SB474-2	226
2SB474-3	226
2SB474-4	226
2SB474-6D	226
2SB474MP	226
2SB474S	226
2SB474V4	226
2SB474V10	226
2SB474Y	226
2SB475	158
2SB475A	158
2SB475B	158
2SB475C	158
2SB475D	158
2SB475E	158
2SB475F	158
2SB475G	158
2SB475P	158
2SB475Q	158
2SB476	158
2SB481	131
2SB481D	131

To Be Replaced	ECG Replacement
2SB481E	131
2SB482	102A
2SB483	179
2SB484	179
2SB485	179
2SB486	102
2SB492	176
2SB492B	176
2SB494	158
2SB495	158
2SB495A	158
2SB495C	158
2SB495D	158
2SB495T	158
2SB496	102A
2SB497	102
2SB498	102A
2SB502	197
2SB503	197
2SB506	281
2SB506A	281
2SB506B	281
2SB506C	281
2SB506D	281
2SB507	153
2SB508	153
2SB509	153
2SB510	129
2SB510S	129
2SB511	153
2SB511C	153
2SB511D	153
2SB511E	187A
2SB512	153
2SB512A	153
2SB512-0	153
2SB512P	153
2SB512Q	153
2SB513	153
2SB513A	153
2SB513P	153
2SB513Q	153
2SB513R	153
2SB514	153
2SB515	153
2SB516	102A
2SB516C	102A
2SB516CD	102A
2SB516D	102A
2SB516P	102A
2SB520	281
2SB522	197
2SB522-1	197
2SB523	187A
2SB525	298
2SB525C	298
2SB525D	298
2SB525E	298
2SB526	292
2SB526C	292
2SB528	292
2SB528C	292
2SB528D	292
2SB530	281
2SB532	285
2SB532P	285
2SB532Q	285
2SB532R	285
2SB532S	285
2SB534	102A
2SB534A	102A
2SB535	158
2SB536	292
2SB536K	292
2SB536L	292
2SB536M	292
2SB537	153
2SB537K	292
2SB537L	292
2SB537LM	153
2SB539	285
2SB541	281
2SB542D	290
2SB544	294
2SB544D	294
2SB544E	294
2SB544F	294
2SB544P1	294
2SB544P1D	294
2SB544P1E	294
2SB544P1F	294
2SB546	292
2SB546AK	292
2SB546AL	292
2SB546EK	292
2SB546EX	292
2SB546I	292
2SB546K	292
2SB546L	292
2SB546M	292
2SB550	197
2SB554	285
2SB554-0	285
2SB554-R	285
2SB555	281
2SB555-O	281
2SB556	281
2SB556O	281
2SB556R	281
2SB557	281
2SB560	102A
2SB561	298
2SB561A	298
2SB561B	298
2SB561C	298

To Be Replaced	ECG Replacement
2SB561D	298
2SB562	288
2SB562A	298
2SB562B	288
2SB562C	288
2SB562-C	294
2SB562D	288
2SB564	294
2SB564K	294
2SB564L	294
2SB564M	294
2SB568	292
2SB568B	292
2SB568C	292
2SB568D	292
2SB568WT	292
2SB569	197
2SB595	197
2SB595-O	197
2SB595R	197
2SB596	197
2SB596-0	197
2SB598	129
2SB598E	129
2SB598F	129
2SB605	294
2SB611	281
2SB611A	281
2SB618	381
2SB641	290
2SB641Q	290
2SB641R	290
2SB641S	290
2SB641.5	290
2SB642	234
2SB642Q	234
2SB642R	234
2SB643	290
2SB643Q	290
2SB643R	290
2SB643S	290
2SB646	383
2SB646B	383
2SB647	383
2SB647A	383
2SB648	374
2SB648A	374
2SB649	374
2SB649A	374
2SB684	294
2SB742Q	234
2SB1851	102A
2SB3030	102A
2SB3244H	158
2SB5642	294
2SB-C731	116
2SB-F1A	102A
2SB-S851	166
2SBF1	102A
2SBF1A	102A
2SBF2	102A
2SBF5	121
2SBF-QRM	955M
2SC1B07I	236
2SC-2C	506
2SC3T2Y	123A
2SC6	195A
2SC7	130
2SC9	236
2SC11	101
2SC12	128
2SC13	101
2SC14	101
2SC15	123A
2SC15-1	123A
2SC15-2	123A
2SC15-3	123A
2SC16	123A
2SC16A	123A
2SC17	108
2SC17A	108
2SC18	123A
2SC19	128
2SC20	128
2SC21	130
2SC22	128
2SC23	128
2SC24	128
2SC26	123A
2SC27	128
2SC28	123
2SC29	123
2SC30	128
2SC31	128
2SC32	128
2SC32A	128
2SC33	123A
2SC34	103A
2SC35	103A
2SC36	101
2SC37	123A
2SC37O	123A
2SC38	123A
2SC39	108
2SC39A	108
2SC40	108
2SC41	163A
2SC41TV	163A
2SC42	162
2SC42A	162
2SC43	162
2SC44	162
2SC45	123A
2SC46	128
2SC47	123A

To Be Replaced	ECG Replacement
2SC48	123
2SC48C	123A
2SC49	128
2SC49Y	130
2SC50	101
2SC50A	101
2SC51	128
2SC52	123A
2SC53	123A
2SC54	123A
2SC55	123A
2SC56	107
2SC58	154
2SC58A	154
2SC59	128
2SC60	101
2SC61	128
2SC62	123A
2SC63	108
2SC64	154
2SC65	154
2SC65B	154
2SC65N	154
2SC65Y	154
2SC65YA	154
2SC65YB	154
2SC65YTV	154
2SC66	154
2SC67	123A
2SC68	123A
2SC69	128
2SC70	154
2SC71	101
2SC72	101
2SC73	101
2SC74	108
2SC75	101
2SC76	101
2SC77	101
2SC77C	101
2SC78	101
2SC79	108
2SC80	108
2SC82BN	107
2SC82R	107
2SC87	123A
2SC88	154
2SC88A	154
2SC89	101
2SC90	101
2SC91	101
2SC95	154
2SC97	128
2SC97A	128
2SC98	108
2SC99	108
2SC100	123A
2SC100-OY	123A
2SC101	124
2SC101A	124
2SC101B	299
2SC101X	124
2SC102	105
2SC103	123A
2SC103A	123A
2SC104	123A
2SC104A	123A
2SC105	123A
2SC106	282
2SC108	128
2SC109	128
2SC109A	128
2SC110	123A
2SC111	123A
2SC111D	291
2SC112	128
2SC113	128
2SC114	128
2SC115	128
2SC116	195A
2SC116T	195A
2SC117	128
2SC118	128
2SC119	128
2SC120	128
2SC121	128
2SC122	128
2SC123	128
2SC124	128
2SC127	108
2SC128	101
2SC129	101
2SC130	128
2SC130L	236
2SC131	123A
2SC132	123A
2SC133	123A
2SC134	123A
2SC134B	123A
2SC135	123A
2SC136	123A
2SC137	123A
2SC138	123A
2SC138A	123A
2SC138S	123A
2SC139	123A
2SC140	128
2SC147	128
2SC147-3	293
2SC147-4	293
2SC148	108
2SC150	128
2SC150T	128
2SC151	123A
2SC152	128

To Be Replaced	ECG Replacement
2SC154	152
2SC154B	152
2SC154C	152
2SC154H	152
2SC155	108
2SC156	108
2SC157	123
2SC158	123
2SC159	123A
2SC160	123A
2SC163	195A
2SC166	123A
2SC167	123A
2SC170	108
2SC170R	123A
2SC171	107
2SC172	108
2SC172A	108
2SC173	101
2SC174	107
2SC174A	107
2SC175	101
2SC175B	101
2SC176	101
2SC177	101
2SC178	101
2SC179	103A
2SC180	103A
2SC181	103A
2SC182	313
2SC182Q	313
2SC183	313
2SC183E	313
2SC183J	313
2SC183K	313
2SC183L	313
2SC183M	313
2SC183P	313
2SC183Q	313
2SC183R	313
2SC183W	313
2SC184	313
2SC184H	313
2SC184J	313
2SC184L	313
2SC184R	313
2SC185	313
2SC185A	313
2SC185J	313
2SC185M	313
2SC185Q	313
2SC185R	313
2SC185V	313
2SC186	107
2SC187	107
2SC187R	103A
2SC187Y	103A
2SC188	128
2SC188A	128
2SC188AB	128
2SC189	128
2SC189D	194
2SC189E	194
2SC189F	194
2SC190	128
2SC191	123A
2SC192	123A
2SC193	123A
2SC194	123A
2SC195	123A
2SC196	123A
2SC197	123A
2SC198	162
2SC199	108
2SC200	123A
2SC201	123A
2SC202	123A
2SC203	123A
2SC204	123A
2SC205	123A
2SC206	108
2SC208	128
2SC210	128
2SC211	128
2SC212	194
2SC213	128
2SC214	128
2SC215	128
2SC216	128
2SC217	128
2SC218	123A
2SC218A	123A
2SC220	128
2SC221	128
2SC222	128
2SC223	128
2SC224	128
2SC225	128
2SC226	128
2SC227	128
2SC228	128
2SC229	128
2SC230	123A
2SC231	128
2SC232	128
2SC233	128
2SC234	128
2SC235	293
2SC235-O	293
2SC235(O)	190
2SC235Y	152
2SC236	128
2SC237	123A
2SC238	128
2SC239	123A

To Be Replaced	ECG Replacement
2SC240	162
2SC241	162
2SC242	162
2SC243	162
2SC244	130
2SC245	162
2SC246	162
2SC247	128
2SC248	128
2SC249	128
2SC250	161
2SC251	161
2SC251A	161
2SC252	161
2SC253	161
2SC254	175
2SC261	128
2SC263	108
2SC266	107
2SC267	123A
2SC267A	123A
2SC268	128
2SC268A	128
2SC269	108
2SC270	162
2SC271	108
2SC272	108
2SC273	154
2SC277C	103A
2SC281	123A
2SC281A	123A
2SC281B	123A
2SC281C	123A
2SC281C-EP	123A
2SC281D	123A
2SC281EP	123A
2SC281H	123A
2SC281HA	123A
2SC281HB	123A
2SC281HC	123A
2SC282	123A
2SC282H	123A
2SC282HA	123A
2SC282HB	123A
2SC282HC	123A
2SC283	123A
2SC284	123A
2SC284H	123A
2SC284HA	123A
2SC284HB	123A
2SC284HC	123A
2SC285	123A
2SC285A	123A
2SC286	108
2SC287	313
2SC287A	313
2SC288	313
2SC288A	313
2SC289	108
2SC290	195A
2SC291	128
2SC292	128
2SC293	195A
2SC296	108
2SC298-4	128
2SC299	225
2SC300	123A
2SC301	123A
2SC302	123A
2SC306	128
2SC307	128
2SC307(CB Final)	195A
2SC307T	195A
2SC308	128
2SC309	128
2SC310	128
2SC311	195A
2SC312	224
2SC313	161
2SC313C	161
2SC313H	161
2SC315	123A
2SC316	108
2SC317	123A
2SC317C	123A
2SC318	123A
2SC318A	123A
2SC320	123A
2SC321	123A
2SC321H	123A
2SC321HA	123A
2SC321HB	123A
2SC321HC	123A
2SC323	123A
2SC324	123A
2SC324A	123A
2SC324H	123A
2SC324HA	123A
2SC325	152
2SC325A	152
2SC325C	152
2SC325E	152
2SC328A	123A
2SC329	107
2SC329B	107
2SC329C	107
2SC333H	213
2SC333HA	213
2SC333HB	213
2SC333HC	213
2SC335	199
2SC337B	121
2SC338	291
2SC341V	127
2SC348	161

To Be Replaced	ECG Replacement
2SC350	123A
2SC350H	123A
2SC351	107
2SC351(FA)	107
2SC352	128
2SC352A	128
2SC353	128
2SC353A	128
2SC356	123A
2SC360	123A
2SC360B	233
2SC360D	123A
2SC361	107
2SC362	107
2SC363	123A
2SC366	123A
2SC367	123A
2SC368	199
2SC368BL	199
2SC368GR	199
2SC368V	199
2SC369	123A
2SC369BL	123A
2SC369G	123A
2SC369G-BL	123A
2SC369G-GR	123A
2SC369G-V	199
2SC369GBL	123A
2SC369GGR	123A
2SC369GR	123A
2SC369V	123A
2SC370	108
2SC370F	108
2SC370G	108
2SC370H	108
2SC370J	108
2SC370K	108
2SC371	123A
2SC371(0)	123A
2SC371-0	123A
2SC371(0)	123A
2SC371B	123A
2SC371G	123A
2SC371O	123A
2SC371-O	123A
2SC371-R	123A
2SC371R	123A
2SC371-R-1	123A
2SC372	123A
2SC372-0	123A
2SC372-1	123A
2SC372-2	123A
2SC372/4454C	123A
2SC372BL	123A
2SC372GR	123A
2SC372H	123A
2SC372-O	123A
2SC372(O)	123A
2SC372-R	123A
2SC372-Y	123A
2SC372Y	123A
2SC372-Y	123A
2SC372Y(3rd IF)	233
2SC372-Z	123A
2SC373	199
2SC373-0	199
2SC373BL	199
2SC373G	199
2SC373GR	199
2SC373-O	199
2SC373S	199
2SC373W	199
2SC374	199
2SC374-BL	199
2SC374JA	199
2SC374-V	199
2SC375	311
2SC375-0	311
2SC375-Y	311
2SC376	128
2SC377	123A
2SC377A	316
2SC378	123A
2SC379	123A
2SC380	229
2SC380-0	229
2SC380-0/4454C	229
2SC380-1	229
2SC380/4454C	229
2SC380A	229
2SC380A-0(TV)	229
2SC380A-C	229
2SC380A-O	229
2SC380A(O)	229
2SC380A-O(TV)	229
2SC380A-R	229
2SC380A-R(TV)	229
2SC380AO	229
2SC380ATV	229
2SC380AY	229
2SC380D	229
2SC380-0	229
2SC380-0/4454C	229
2SC380R	229
2SC380R/4454C	229
2SC380TV	229
2SC380Y	229
2SC380-Y	229
2SC381	107
2SC381-0	107
2SC381BN	107
2SC381-O	107
2SC381-R	107
2SC381R	107
2SC382	319

To Be Replaced	ECG Replacement
2SC382BK	319
2SC382-BK(1)	319
2SC382-BK(2)	319
2SC382BL	319
2SC382BN	319
2SC382BR	319
2SC382G	319
2SC382-GR	319
2SC382GR	319
2SC382-GY	319
2SC382R	319
2SC382V	319
2SC382W	319
2SC383	199
2SC383F	199
2SC383(Final IF)	233
2SC383G	199
2SC383T	199
2SC383T(Last IF)	233
2SC383W	199
2SC383Y	199
2SC384	108
2SC384-O	108
2SC384Y	108
2SC385	107
2SC385A	107
2SC386	108
2SC386A-0(TV)	108
2SC387	316
2SC387A	316
2SC387A(FA-3)	316
2SC387G	316
2SC388	233
2SC388A	233
2SC388A(3rd IF)	233
2SC388ATV	283
2SC389	161
2SC389-0	161
2SC389R	161
2SC390	161
2SC392	108
2SC394	229
2SC394-0	229
2SC394GR	229
2SC394-O	229
2SC394R	229
2SC394W	229
2SC394X	229
2SC394Y	229
2SC395	123A
2SC395A	123A
2SC395R	123A
2SC396	123A
2SC397	108
2SC398	161
2SC398(FA-1)	108
2SC399	161
2SC400	123A
2SC400-0	123A
2SC400-GR	199
2SC400-R	123A
2SC400-Y	123A
2SC401	123A
2SC401A	291
2SC401AK	291
2SC401AL	291
2SC402	123A
2SC402A	123A
2SC403	289
2SC403A	289
2SC403B(Sony)	289
2SC403C	289
2SC403C(3rd IF)	233
2SC403C(Sony)	289
2SC403(C)	123A
2SC403C(SONY)	128
2SC404	123A
2SC405	108
2SC406	108
2SC407	162
2SC408	163A
2SC409	163A
2SC410	163A
2SC411	163A
2SC412	163A
2SC423	123A
2SC423B	123A
2SC423C	123A
2SC423D	123A
2SC423E	123A
2SC423F	123A
2SC424	123A
2SC424D	123A
2SC425	123A
2SC425B	123A
2SC425C	123A
2SC425D	123A
2SC425E	123A
2SC425F	123A
2SC429	108
2SC429J	108
2SC429X	108
2SC430	108
2SC430H	108
2SC430W	108
2SC433	123A
2SC434B	108
2SC440	123
2SC441	123
2SC442	123
2SC443	128
2SC454	289
2SC454A	289
2SC454(A)	289
2SC454B	289
2SC454C	289
2SC454D	289
2SC454L	289
2SC454LA	289
2SC455	289
2SC456	195A
2SC456A	195A
2SC456D	195A
2SC456-O	195A
2SC458	289
2SC458A	289
2SC458AD	289
2SC458B	289
2SC458B-D	289
2SC458BC	289
2SC458BK	289
2SC458BL	289
2SC458BLG	289
2SC458C	289
2SC458(C)	289
2SC458CLG	289
2SC458CM	289
2SC458D	289
2SC458G	289
2SC458GLB	289
2SC458K	289
2SC458KA	289
2SC458KB	289
2SC458KC	289
2SC458KD	289
2SC458L	289
2SC458LB	289
2SC458LC	289
2SC458LG	289
2SC458LG(B)	123A
2SC458LGA	289
2SC458LGB	289
2SC458LGBM	289
2SC458LGC	289
2SC458LGD	289
2SC458LGO	289
2SC458LGS	289
2SC458M	289
2SC458P	289
2SC458RGS	289
2SC458TOK	289
2SC458V	289
2SC458VC	289
2SC459	128
2SC459B	128
2SC459C	123A
2SC459D	123A
2SC460	233
2SC460A	233
2SC460(A)	233
2SC460B	233
2SC460(B)	233
2SC460C	233
2SC460D	233
2SC460F	107
2SC460G	233
2SC460GB	233
2SC460H	233
2SC460K	233
2SC460L	233
2SC461	229
2SC461A	229
2SC461B	229
2SC461C	229
2SC461E	229
2SC461L	229
2SC461R	108
2SC463	319
2SC463H	319
2SC464	161
2SC464C	161
2SC465	161
2SC466	161
2SC466H	161
2SC467B	287
2SC468	123A
2SC468A	123A
2SC468B	287
2SC468C	287
2SC468(LGR)	289
2SC469	313
2SC469A	313
2SC469F	313
2SC469K	313
2SC469Q	313
2SC469R	313
2SC470	154
2SC472Y	154
2SC474	123A
2SC475	123A
2SC475K	123A
2SC476	123A
2SC477	108
2SC478	195A
2SC478-4	195A
2SC478D	195A
2SC478(D)	195A
2SC478YL	291
2SC479	128
2SC481	195A
2SC481X	195A
2SC482	195A
2SC482-0	195A
2SC482-GR	195A
2SC482GR	195A
2SC482X	195A
2SC482-Y	195A
2SC482Y	195A
2SC484	282
2SC484BL	282
2SC484R	282
2SC484Y	282
2SC485	282
2SC485BL	282
2SC485C	282
2SC485Y	282
2SC486	282
2SC486BL	282
2SC486Y	282
2SC487	175
2SC488	175
2SC489	175
2SC489Y	175
2SC490	175
2SC491	175
2SC491BL	175
2SC491R	175
2SC491Y	175
2SC492	162
2SC493	223
2SC493-BL	223
2SC493-R	223
2SC493-Y	223
2SC494	223
2SC494-BL	223
2SC494BL	223
2SC494-R	223
2SC494-Y	223
2SC495	295
2SC495-0	295
2SC495AQ	199
2SC495(C.B.)	295
2SC495(CB)	295
2SC495-O	184
2SC495-R	295
2SC495(RF PWR)	295
2SC495T	295
2SC495-Y	184
2SC495Y	295
2SC496	295
2SC496-0	295
2SC496-O	295
2SC496(O)	295
2SC496-R	295
2SC496-Y	295
2SC496Y	295
2SC497	128
2SC497-0	128
2SC497-R	128
2SC497-Y	128
2SC498	128
2SC498-0	128
2SC498-R	128
2SC498-Y	128
2SC499	194
2SC499R	194
2SC499-R(FA-1)	194
2SC499-RY	194
2SC499Y	194
2SC499-Y(FA-1)	194
2SC500	154
2SC500R	154
2SC500Y	154
2SC501	128
2SC502	195A
2SC503	128
2SC503GR	128
2SC503-O	128
2SC503-Y	128
2SC504	128
2SC504GR	128
2SC504-O	128
2SC504-Y	128
2SC505	154
2SC505-O	154
2SC505-R	154
2SC506	154
2SC506-O	154
2SC506-R	154
2SC507	154
2SC507-0	154
2SC507-R	154
2SC507-Y	154
2SC508	286
2SC509	289
2SC509(0)	289
2SC509G	289
2SC509-O	289
2SC509Q	289
2SC509Y	289
2SC512	128
2SC512-0	128
2SC512-R	128
2SC513	128
2SC513-O	128
2SC513R	128
2SC514	124
2SC515	124
2SC515A	124
2SC515A(BK)	124
2SC515AM	124
2SC515AX	124
2SC515BK	124
2SC515Y	124
2SC516	128
2SC517	237
2SC517C	237
2SC519	162
2SC519A	162
2SC520	130
2SC520A	130
2SC521	130
2SC521A	130
2SC522	225
2SC522-0	225
2SC522-R	225
2SC523	225
2SC523-0	225
2SC523-R	225
2SC524	225
2SC524-0	225
2SC524-R	225
2SC525	225
2SC525-0	225
2SC525-R	225
2SC526	154
2SC529	123A
2SC529A	123A
2SC535	229
2SC535A	229
2SC535B	229
2SC535(B)	229
2SC535C	229
2SC535G	229
2SC536	199
2SC536A	199
2SC536A(3rd IF)	233
2SC536AG	199
2SC536B	199
2SC536C	199
2SC536D	199
2SC536DK	199
2SC536E	199
2SC536ED	199
2SC536EH	199
2SC536EJ	199
2SC536EN	199
2SC536EP	199
2SC536ER	199
2SC536ET	199
2SC536EZ	199
2SC536F	199
2SC536F1	199
2SC536F2	199
2SC536F-FP	199
2SC536FC	199
2SC536FP	199
2SC536FS	199
2SC536FS6	199
2SC536FZ	199
2SC536G	199
2SC536G2	199
2SC536GF	199
2SC536GK	199
2SC536GT	199
2SC536GV	199
2SC536GY	199
2SC536H	199
2SC536K	199
2SC536NP	199
2SC536Q	199
2SC536W	199
2SC536YE	199
2SC536YF	199
2SC536YG	199
2SC537	123A
2SC537-01	123A
2SC537C	123A
2SC537D	123A
2SC537D2	123A
2SC537E	123A
2SC537EF	123A
2SC537EH	123A
2SC537EJ	123A
2SC537EK	123A
2SC537F	123A
2SC537(F)	123A
2SC537F1	123A
2SC537F2	123A
2SC537F-C7	123A
2SC537FC	123A
2SC537FV	123A
2SC537G	123A
2SC537(G)	123A
2SC537G2	123A
2SC537GF	123A
2SC537GI	123A
2SC537H	123A
2SC537HT	123A
2SC537W	123A
2SC538	123A
2SC538A	123A
2SC538AQ	123A
2SC538P	123A
2SC538Q	123A
2SC538R	123A
2SC538S	123A
2SC538T	123A
2SC539	123A
2SC539K	123A
2SC539L	123A
2SC539R	123A
2SC539S	123A
2SC540	123A
2SC544	108
2SC544C	108
2SC544D	108
2SC544E	108
2SC545	107
2SC545A	107
2SC545B	107
2SC545C	107
2SC545D	107
2SC545E	107
2SC558	389
2SC560	128
2SC561	108
2SC562	161
2SC562-0	161
2SC562Y	161
2SC563	161
2SC563(3rdIF)	233
2SC563A	161
2SC563A(3rdIF)	233
2SC564	159
2SC564A	159
2SC564P	159
2SC564Q	159
2SC564R	159
2SC564S	159
2SC564T	159
2SC566	123A
2SC567	161
2SC568	108
2SC580	195A
2SC582	124
2SC582A	124
2SC582B	124
2SC582BC	124
2SC582BX	124
2SC582BY	124
2SC582C	124
2SC582EA	124
2SC583	278
2SC583C	278
2SC586	162
2SC587	123AP
2SC587A	123AP
2SC587B	123AP
2SC587C	123AP
2SC588	123A
2SC589	154
2SC590	289
2SC590Y	289
2SC593	123A
2SC594	128
2SC595	123A
2SC596	123A
2SC601	311
2SC605	313
2SC605K	313
2SC605L	313
2SC605M	313
2SC605Q	313
2SC605(Q)	313
2SC606	313
2SC608	237
2SC608E	237
2SC608T	237
2SC609	237
2SC609F	237
2SC609T	237
2SC609Y	237
2SC611	108
2SC612	108
2SC613	108
2SC614	195A
2SC614C	195A
2SC614D	195A
2SC614E	195A
2SC614F	195A
2SC614G	195A
2SC615	195A
2SC615A	195A
2SC615B	195A
2SC615C	195A
2SC615D	195A
2SC615E	195A
2SC615F	195A
2SC615G	195A
2SC619	123A
2SC619B	123A
2SC619C	123A
2SC619D	123A
2SC620	123A
2SC620B	123A
2SC620C	123A
2SC620CD	123A
2SC620D	123A
2SC620DE	123A
2SC620E	123A
2SC621	123A
2SC622	123A
2SC626	123A
2SC627	154
2SC628	128
2SC629	107
2SC631	123A
2SC631A	123A
2SC632	123A
2SC632A	123A
2SC633	123A
2SC633-7	123A
2SC633A	123A
2SC633G	123A
2SC633H	123A
2SC634	123A
2SC634A	123A
2SC640	123A
2SC640B	123A
2SC641	108
2SC641B	108
2SC642	389
2SC642A	389
2SC643	389
2SC643A	389
2SC644	199
2SC644C	199
2SC644F	199
2SC644FR	199
2SC644FS	199
2SC644H	199
2SC644HR	199
2SC644HS	293
2SC644P	199
2SC644PJ	199
2SC644Q	199
2SC644QRS	199
2SC644R	199
2SC644RF	199
2SC644RST	199
2SC644S	199
2SC644T	199
2SC645	107
2SC645A	107
2SC645B	107
2SC645C	107
2SC645G	107
2SC645N	107
2SC646	223
2SC647	280
2SC647P	280
2SC647Q	280
2SC647R	280
2SC648	199
2SC648H	199
2SC649	108
2SC650	199
2SC650B	199
2SC651	311
2SC652	311
2SC653	316
2SC654	311
2SC655	123A
2SC656	107
2SC657	107
2SC658	108
2SC658A	108
2SC659	108
2SC662	108
2SC663	161
2SC664	130
2SC664B	130
2SC664C	130
2SC665	280
2SC665H	280
2SC665HA	280
2SC665HB	280
2SC668	229
2SC668-0	229
2SC668A	229
2SC668B	229
2SC668B1	229
2SC668BC2	229
2SC668C	229
2SC668C1	229
2SC668CD	229
2SC668CE	199
2SC668D	229
2SC668D0	229
2SC668D1	229
2SC668DE	229
2SC668DO	229
2SC668DV	229
2SC668DX	229
2SC668DZ	229
2SC668E	229
2SC668E1	229
2SC668E2	229
2SC668EP	229
2SC668EV	229
2SC668EX	229
2SC668F	229
2SC670	124
2SC674	161
2SC674B	161
2SC674C	161
2SC674CK	161
2SC674CL	161
2SC674CV	161
2SC674CZ	161
2SC674D	161
2SC674E	161
2SC674F	161
2SC674G	161
2SC674V	161
2SC675	283
2SC677	159
2SC680	175
2SC680A	175
2SC680R	175
2SC681	163A
2SC681A	163A
2SC681B	163A
2SC681YL	163A
2SC682	161
2SC682A	161
2SC682B	161
2SC682E	161
2SC683	161
2SC683A	161
2SC683B	161
2SC683P	108
2SC683Q	108
2SC683R	108
2SC683V	161
2SC684	229
2SC684A	108
2SC684B	108
2SC684BK	108
2SC684F	108
2SC684R	229
2SC685	124
2SC685(0)	124
2SC685A	124
2SC685B	124
2SC685BK	124
2SC685GU	124
2SC685P	124
2SC685S	124
2SC685Y	124
2SC686	154
2SC687	162
2SC688	108
2SC688E	199
2SC688EL	199
2SC689	123A
2SC689H	123A
2SC693	199
2SC693E	199
2SC693EB	199
2SC693ET	199
2SC693F	199
2SC693FC	199
2SC693FL	199
2SC693FU	199
2SC693G	199
2SC693GL	199
2SC693GS	199
2SC693GU	199
2SC693GZ	199
2SC693H	199
2SC694	199
2SC694E	199
2SC694F	199
2SC694G	199
2SC694Z	199
2SC695	107
2SC696	195A
2SC696A	195A
2SC696B	195A
2SC696D	195A
2SC696(D)	195A
2SC696E	195A
2SC696F	195A
2SC696G	195A
2SC696H	195A
2SC696I	195A
2SC697	237
2SC697A	237
2SC697D	237
2SC697F	237
2SC701	311
2SC702	123
2SC705	107
2SC705B	107
2SC705C	107
2SC705D	107
2SC705E	107
2SC705F	107
2SC705TV	107
2SC705TV(3rd IF)	233
2SC707	107
2SC707H	107
2SC708	128
2SC708A	128
2SC708AA	128
2SC708AB	128
2SC708AC	128
2SC708AH	128
2SC708AHA	128
2SC708AHB	128
2SC708AHC	128
2SC708B	128
2SC708C	128
2SC709	123A
2SC709B	123A
2SC709C	123A
2SC709CD	123A
2SC709D	123A
2SC710	123AP
2SC710-0	123AP
2SC710-1	123AP
2SC710-2	123AP
2SC710-4	123AP
2SC710B	123AP
2SC710B2	123AP
2SC710(B)	123AP
2SC710BC	123AP
2SC710C	123AP
2SC710(C)	123AP
2SC710CD	123AP
2SC710D	123AP
2SC710(D)	123AP
2SC710DE	123AP
2SC710E	123AP
2SC710F	123AP
2SC710P	123A
2SC711	199
2SC711A	199
2SC711,A,F,G	199
2SC711AE	199
2SC711AF	199
2SC711AG	199
2SC711D	199
2SC711E	199
2SC711(E)	199
2SC711F	199
2SC711FG	199
2SC711G	199
2SC712	123A
2SC712A	123A
2SC712B	123A
2SC712BC	123A
2SC712C	123A
2SC712-CD	123A
2SC712D	123A
2SC712DE	123A
2SC712E	123A
2SC712-O	123A
2SC712W	123A
2SC713	123A
2SC714	123A
2SC715	123A

To Be Replaced	ECG Replacement
2SC715A	123A
2SC715B	123A
2SC715C	123A
2SC715D	123A
2SC715E	123A
2SC715EJ	123A
2SC715EV	123A
2SC715F	123A
2SC715XL	123A
2SC716	123A
2SC716B	123A
2SC716C	123A
2SC716D	123A
2SC716E	123A
2SC716F	123A
2SC716G	123A
2SC717	161
2SC717(3rd IF)	233
2SC717B	161
2SC717BK	161
2SC717BLK	161
2SC717C	161
2SC717E	161
2SC717(Last IF)	233
2SC722	229
2SC723	108
2SC725	123A
2SC725-0	123A
2SC727	154
2SC728	154
2SC730	278
2SC731	278
2SC732	199
2SC732-0	199
2SC732B	199
2SC732BL	199
2SC732GR	199
2SC732GR/4454C	199
2SC732S	199
2SC732V	199
2SC732Y	199
2SC733	199
2SC733-0	199
2SC733B	199
2SC733BL	199
2SC733GR	199
2SC733(GR)	199
2SC733-O	199
2SC733Q	199
2SC733R	199
2SC733V	199
2SC733Y	199
2SC733-Y	199
2SC734	128
2SC734-0	128
2SC734GR	128
2SC734-O	128
2SC734O	128
2SC734-R	128
2SC734-Y	128
2SC734Y	128
2SC735	289
2SC735-0	289
2SC735/4454C	289
2SC735B	289
2SC735F	289
2SC735(FA-3)	289
2SC735G	289
2SC735GR	289
2SC735H	289
2SC735J	289
2SC735K	289
2SC735L	289
2SC735-O	289
2SC735(O)	289
2SC735ORN	289
2SC735R	289
2SC735Y	289
2SC735-Y	289
2SC735Y/4454C	289
2SC736	130
2SC737	123A
2SC737Y	123A
2SC738	107
2SC738B	107
2SC738C	107
2SC738D	107
2SC739	107
2SC739C	107
2SC740	108
2SC741	278
2SC743A	154
2SC745Q	199
2SC746A	154
2SC748	108
2SC752	123A
2SC752G	123A
2SC756	282
2SC756-1	282
2SC756-1-1	282
2SC756-1-2	282
2SC756-1-3	282
2SC756-1-4	282
2SC756-2	282
2SC756-2-1	282
2SC756-2-2	282
2SC756-2-3	282
2SC756-2-4	282
2SC756-2-5	282
2SC756-3	282
2SC756-3-1	282
2SC756-3-2	282
2SC756-3-3	282
2SC756-3-4	282
2SC756-4	282

To Be Replaced	ECG Replacement
2SC756-4-1	282
2SC756-4-2	282
2SC756-4-3	282
2SC756-4-4	282
2SC756-5	282
2SC756A	282
2SC756A-1	282
2SC756A-2	282
2SC756A-3	282
2SC756A-4	282
2SC756C	282
2SC756D	282
2SC756E	282
2SC756H	282
2SC756S	282
2SC756S-2	282
2SC756S-2-1	282
2SC756S-2-2	282
2SC756S-2-3	282
2SC756S-2-4	282
2SC756S-3	282
2SC756S-3-1	282
2SC756S-3-2	282
2SC756S-3-3	282
2SC756S-4	282
2SC756S-4-1	282
2SC756S-4-2	282
2SC757	313
2SC761	161
2SC761Y	161
2SC761Z	161
2SC762	161
2SC762P	108
2SC763	229
2SC763-0	229
2SC763B	229
2SC763C	229
2SC763(C)	107
2SC763CD	229
2SC763D	229
2SC763-O	229
2SC765	130
2SC768	130
2SC772	229
2SC772B	229
2SC772BG	229
2SC772BH	229
2SC772BV	229
2SC772BX	229
2SC772BY	229
2SC772C	229
2SC772C1	229
2SC772C2	229
2SC772CA	107
2SC772CK	229
2SC772CL	229
2SC772CU	229
2SC772CV	229
2SC772CX	229
2SC772D	229
2SC772DJ	229
2SC772DU	229
2SC772DV	229
2SC772DX	229
2SC772DY	229
2SC772E	229
2SC772F	229
2SC772K	229
2SC772KB	229
2SC772KC	229
2SC772KD	229
2SC772KD1	229
2SC772KD2	229
2SC772R	229
2SC772RB-D	229
2SC772RD	229
2SC773	123A
2SC773C	123A
2SC773D	123A
2SC773E	123A
2SC774	195A
2SC775	195A
2SC776	195A
2SC776Y	195A
2SC776(Y)	237
2SC777	237
2SC778	237
2SC778B	237
2SC778D	229
2SC779	286
2SC779-0	286
2SC779O	286
2SC779-R	286
2SC779R	286
2SC779-Y	286
2SC779Y	286
2SC780	287
2SC780AG	287
2SC780AG-0	287
2SC780AG-O	287
2SC780AG-R	287
2SC780AG-Y	287
2SC780G	287
2SC781	195A
2SC782	286
2SC783	286
2SC783Y	286
2SC784	229
2SC784-0	229
2SC784A	229
2SC784BN	229
2SC784-O	229
2SC784O	229
2SC784-O	229
2SC784R	229

To Be Replaced	ECG Replacement
2SC784R/4454C	229
2SC784Y	229
2SC785	229
2SC785BN	229
2SC785D	229
2SC785E	229
2SC785-O	229
2SC785R	229
2SC786	229
2SC786-0	161
2SC786-O	161
2SC786R	229
2SC787	161
2SC787A	161
2SC788	154
2SC789	152
2SC789-0	152
2SC789-O	152
2SC789-R	152
2SC789R	152
2SC789-Y	152
2SC789Y	152
2SC790	152
2SC790-0	152
2SC790-O	291
2SC790Y	152
2SC791	175
2SC792	162
2SC792/FA-3	162
2SC793	130
2SC793BL	130
2SC793R	130
2SC793Y	130
2SC794R	130
2SC795	124
2SC795A	124
2SC796	123A
2SC797	128
2SC798	128
2SC799	237
2SC799K	237
2SC800	313
2SC803	128
2SC804H	196
2SC805	154
2SC806	283
2SC806A	283
2SC807	163A
2SC807A	163A
2SC814	192A
2SC814-0	292
2SC814-Y	292
2SC815	123AP
2SC815A	123A
2SC815B	123A
2SC815C	123A
2SC815F	123A
2SC815K	123A
2SC815L	123A
2SC815M	123A
2SC815(M)	123A
2SC815-O	292
2SC815P	123A
2SC815S	123A
2SC815SA	123A
2SC815SC	123A
2SC815-Y	292
2SC816	128
2SC816K	128
2SC818	154
2SC821	346
2SC822	346
2SC823	278
2SC826	128
2SC827	128
2SC828	199
2SC828A	199
2SC828AF	199
2SC828AP	199
2SC828AQ	199
2SC828AR	199
2SC828AS	199
2SC828AT	199
2SC828B	199
2SC828C	199
2SC828E	199
2SC828F	199
2SC828FR	199
2SC828H	199
2SC828HR	199
2SC828K	199
2SC828LR	199
2SC828LS	199
2SC828N	199
2SC828-O	199
2SC828O	199
2SC828-OP	199
2SC828P	199
2SC828-P	199
2SC828PQ	199
2SC828Q	199
2SC828-Q	199
2SC828QRS	199
2SC828R	199
2SC828-R	199
2SC828RS	199
2SC828RST	199
2SC828RT	199
2SC828S	199
2SC828ST	199
2SC828T	199
2SC828W	199
2SC828Y	199
2SC829	123A
2SC829A	123A

To Be Replaced	ECG Replacement
2SC829B	123A
2SC829B/4454C	123A
2SC829BC	123A
2SC829BY	123A
2SC829C	123A
2SC829D	123A
2SC829F	123A
2SC829P	123A
2SC829Q	123A
2SC829R	123A
2SC829S	123A
2SC829X	123A
2SC829Y	123A
2SC830	175
2SC830-0	175
2SC830A	175
2SC830B	175
2SC830BKB	175
2SC830C	175
2SC831	123A
2SC833BL	199
2SC835	107
2SC836M	123A
2SC837	107
2SC837F	107
2SC837H	107
2SC837K	107
2SC837L	107
2SC837WF	107
2SC838	123A
2SC838A	123A
2SC838B	123A
2SC838C	123A
2SC838D	123A
2SC838E	123A
2SC838F	123A
2SC838H	123A
2SC838(H)	199
2SC838J	123A
2SC838(J)	199
2SC838K	123A
2SC838(K)	199
2SC838L	123A
2SC838(L)	199
2SC838M	123A
2SC838(M)	199
2SC838S	123A
2SC838W	123A
2SC839	123A
2SC839A	123A
2SC839B	123A
2SC839C	123A
2SC839D	123A
2SC839E	123A
2SC839F	123A
2SC839H	123A
2SC839(H)	123A
2SC839J	123A
2SC839(J)	123A
2SC839JI	123A
2SC839K	123A
2SC839L	123A
2SC839(L)	123A
2SC839M	123A
2SC839(M)	123A
2SC839N	123A
2SC839Q	123A
2SC839R	123A
2SC839S	123A
2SC839Y	123A
2SC840	175
2SC840A	175
2SC840AC	175
2SC840H	175
2SC840HP	175
2SC840P	175
2SC840PQ	175
2SC844	123A
2SC845	195A
2SC847	123A
2SC848	123A
2SC849	123A
2SC850	123A
2SC851	130
2SC853	192A
2SC853A	192A
2SC853B	192A
2SC853C	192A
2SC853K	192A
2SC853KLM	192A
2SC853L	192A
2SC856	154
2SC856-02	154
2SC856C	154
2SC857	154
2SC857H	154
2SC858E	199
2SC858F	199
2SC858FG	199
2SC858G	199
2SC859	199
2SC859E	199
2SC859F	199
2SC859FG	199
2SC859G	199
2SC859GK	199
2SC860	161
2SC860C	161
2SC860D	161
2SC860E	161
2SC863	161
2SC863D	108
2SC864	161
2SC866	237
2SC867	277

To Be Replaced	ECG Replacement
2SC867A	277
2SC868	154
2SC869	154
2SC870	123A
2SC870BL	123A
2SC870C	123A
2SC870E	123A
2SC870F	123A
2SC871	123A
2SC871BL	123A
2SC871D	123A
2SC871E	123A
2SC871F	123A
2SC871G	123A
2SC875	128
2SC875-1	128
2SC875-1C	128
2SC875-1D	128
2SC875-1E	128
2SC875-1F	128
2SC875-2	128
2SC875-2C	128
2SC875-2D	128
2SC875-2E	128
2SC875-2F	128
2SC875-3	128
2SC875-3C	128
2SC875-3D	128
2SC875-3E	128
2SC875-3F	128
2SC875BR	128
2SC875C	128
2SC875D	128
2SC875E	128
2SC875F	128
2SC876	128
2SC876C	128
2SC876D	128
2SC876E	128
2SC876F	128
2SC876TV	128
2SC876TVD	128
2SC876TVE	128
2SC876TVEF	128
2SC881	192A
2SC881A	192A
2SC881B	192A
2SC881C	192A
2SC881D	192A
2SC881K	192A
2SC881L	192A
2SC889	162
2SC890	311
2SC894	123A
2SC895	175
2SC896	123A
2SC897	280
2SC897A	280
2SC897B	280
2SC897C	280
2SC898	280
2SC898A	280
2SC898B	280
2SC898C	280
2SC899	123A
2SC899K	123A
2SC900	199
2SC900A	199
2SC900AF	199
2SC900B	199
2SC900C	199
2SC900D	199
2SC900E	199
2SC900EF	199
2SC900EU	199
2SC900F	199
2SC900(F)	199
2SC900L	199
2SC900(L)	199
2SC900M	199
2SC900U	199
2SC900U/E	199
2SC900UE	199
2SC900V	199
2SC900VE	199
2SC901	163A
2SC901A	163A
2SC903	287
2SC906	123A
2SC906F	123A
2SC907	199
2SC907A	199
2SC907AC	199
2SC907AD	199
2SC907AH	199
2SC907C	199
2SC907D	199
2SC907H	199
2SC907HA	199
2SC908	278
2SC912	108
2SC913	123A
2SC915	199
2SC915A	199
2SC915AQ	199
2SC915Q	199
2SC915R	199
2SC917	229
2SC917K	229
2SC918	161
2SC920	229
2SC920E	107
2SC920Q	229
2SC920R	229
2SC921	107

To Be Replaced	ECG Replacement
2SC921C1	107
2SC921K	107
2SC921L	107
2SC921M	107
2SC922	107
2SC922A	107
2SC922B	107
2SC922C	107
2SC922K	107
2SC922L	107
2SC922M	107
2SC923	199
2SC923A	199
2SC923B	199
2SC923C	199
2SC923D	199
2SC923E	199
2SC923F	199
2SC923Q	199
2SC923U	199
2SC924	108
2SC924E	108
2SC924F	108
2SC924M	108
2SC925	123A
2SC926	154
2SC926A	154
2SC926AE	154
2SC927	319
2SC927A	319
2SC927B	319
2SC927C	319
2SC927CJ	319
2SC927CT	319
2SC927CU	319
2SC927CW	319
2SC927D	319
2SC927DD	161
2SC927E	319
2SC928	161
2SC928B	161
2SC928C	161
2SC928D	161
2SC928E	161
2SC929	229
2SC929-0	229
2SC929B	229
2SC929C	229
2SC929C1	229
2SC929D	229
2SC929D1	229
2SC929DE	229
2SC929DP	229
2SC929DU	229
2SC929DV	229
2SC929E	229
2SC929ED	229
2SC929F	229
2SC929FK	229
2SC929H	229
2SC930	229
2SC930B	229
2SC930BB	229
2SC930BK	229
2SC930BV	229
2SC930C	229
2SC930CD	229
2SC930CK	229
2SC930CL	229
2SC930CS	229
2SC930D	229
2SC930D1	229
2SC930D2	229
2SC930DE	229
2SC930DH	229
2SC930DS	229
2SC930DT	229
2SC930DT-2	229
2SC930DX	229
2SC930DZ	229
2SC930E	229
2SC930EP	229
2SC930ET	229
2SC930EV	229
2SC930EX	229
2SC930F	229
2SC930J	229
2SC930L	229
2SC931	186A
2SC931C	186A
2SC931D	186A
2SC931E	186A
2SC932	152
2SC932E	152
2SC933	123A
2SC933BB	123A
2SC933C	123A
2SC933D	123A
2SC933E	123A
2SC933F	123A
2SC933FP	123A
2SC933FPC	123A
2SC933FPD	123A
2SC933FPE	123A
2SC933FPF	123A
2SC933FPG	123A
2SC933G	123A
2SC934	123A
2SC934C	123A
2SC934D	123A
2SC934E	123A
2SC934F	123A
2SC934G	123A
2SC934P	123A
2SC935	162

To Be Replaced	ECG Replacement
2SC936	164
2SC936BK	164
2SC937	165
2SC937-01	165
2SC937A	165
2SC937B	165
2SC937(BK)	165
2SC937YL	165
2SC937(YL)	165
2SC938	123A
2SC938A	123A
2SC938B	123A
2SC938C	123A
2SC939	163A
2SC939D	289
2SC939L	163A
2SC940	283
2SC940L	283
2SC940M	283
2SC940P	283
2SC940Q	283
2SC940R	283
2SC941	123A
2SC941-0	123A
2SC941-0Y	199
2SC941-Q	123A
2SC941-R	123A
2SC941R	123A
2SC941TM	123A
2SC941TM-0	123A
2SC941-Y	123A
2SC941Y	123A
2SC941-Y	123A
2SC941YO	123A
2SC943	123A
2SC943A	123A
2SC943B	123A
2SC943C	123A
2SC944	123A
2SC944K	123A
2SC945	199
2SC945A	199
2SC945A/D	199
2SC945A/P	199
2SC945AK	199
2SC945AO	199
2SC945AP	199
2SC945AQ	199
2SC945AR	199
2SC945B	199
2SC945C	199
2SC945CK	199
2SC945D	199
2SC945E	199
2SC945F	199
2SC945 G	199
2SC945G	199
2SC945K	199
2SC945L	199
2SC945LK	199
2SC945LP	199
2SC945LPQ	199
2SC945LQ	199
2SC945M	199
2SC945-O	199
2SC945O	199
2SC945P	199
2SC945P1	199
2SC945P2	199
2SC945P/Q	199
2SC945PO	199
2SC945PQ	199
2SC945Q	199
2SC945-Q	199
2SC945QL	199
2SC945QP	199
2SC945QR	199
2SC945R	199
2SC945-R	199
2SC945(R)	199
2SC945RQ	199
2SC945S	199
2SC945T	199
2SC945TK	199
2SC945TP	199
2SC945TQ	199
2SC945TR	199
2SC945U	199
2SC945X	199
2SC945Y	199
2SC945Z	199
2SC947	161
2SC948	161
2SC948E	161
2SC953K	199
2SC957	161
2SC959	128
2SC959A	128
2SC959B	128
2SC959C	128
2SC959D	128
2SC959M	128
2SC959S	128
2SC959SA	128
2SC959SB	128
2SC959SC	128
2SC959SD	128
2SC960	128/400
2SC960A	128/400
2SC960B	128/400
2SC960C	128/400
2SC960D	128/400
2SC960K	128/400
2SC960L	128/400
2SC960M	128/400

To Be Replaced	ECG Replacement
2SC960N	128/400
2SC960S	128/400
2SC960SA	128/400
2SC960SB	128/400
2SC960SC	128/400
2SC960SD	128/400
2SC966	123A
2SC967	123A
2SC968	123A
2SC968P	123A
2SC971	123A
2SC972	128
2SC972C	128
2SC972D	128
2SC972E	128
2SC973	283
2SC982	172A
2SC983	287
2SC983A	287
2SC983C	287
2SC983FA-1	287
2SC983O	287
2SC983-O	287
2SC983S	287
2SC983-Y	287
2SC984	123A
2SC984A	123A
2SC984B	123A
2SC984C	123A
2SC991	123A
2SC992	123A
2SC993	128
2SC993D	128
2SC995	154
2SC996	225
2SC997	161
2SC998	278
2SC999	165
2SC999A	165
2SC1000	199
2SC1000-BL	199
2SC1000BL	199
2SC1000-GR	199
2SC1000GR	199
2SC1000SR	199
2SC1000Y	199
2SC1000-Y	123A
2SC1000Y	123A
2SC1001	278
2SC1004	164
2SC1004A	164
2SC1005	165
2SC1005A	165
2SC1006	199
2SC1006A	199
2SC1006B	199
2SC1006C	199
2SC1007	123A
2SC1008	128
2SC1010	199
2SC1010A	199
2SC1010B	199
2SC1010C	199
2SC1012	154
2SC1012A	154
2SC1012E	154
2SC1013	300
2SC1013C	300
2SC1013D	300
2SC1014	300
2SC1014B	300
2SC1014C	300
2SC1014C1	300
2SC1014CD	300
2SC1014D	300
2SC1014D1	300
2SC1017	299
2SC1017-05	299
2SC1018	299
2SC1018-05	299
2SC1018B	299
2SC1023	107
2SC1023G	107
2SC1023-O	107
2SC1023-Y	107
2SC1023Y	123A
2SC1024	175
2SC1024B	175
2SC1024C	175
2SC1024D	175
2SC1024-D2	175
2SC1024E	175
2SC1024F	175
2SC1025	175
2SC1025CTV	175
2SC1025D	175
2SC1025E	175
2SC1025J	175
2SC1025MT	175
2SC1026	107
2SC1026G	107
2SC1026Y	107
2SC1027	163A
2SC1030	280
2SC1030A	280
2SC1030B	280
2SC1030C	280
2SC1030D	280
2SC1032	107
2SC1032G	107
2SC1032Y	107
2SC1033	123A
2SC1033A	123A
2SC1034	277
2SC1035	161

To Be Replaced	ECG Replacement
2SC1035C	161
2SC1035D	161
2SC1035E	161
2SC1036	161
2SC1042	295
2SC1044	161
2SC1045	164
2SC1045B	164
2SC1045C	164
2SC1045D	164
2SC1045E	164
2SC1045R	164
2SC1046	165
2SC1046K	165
2SC1046N	165
2SC1047	229
2SC1047B	229
2SC1047BC	229
2SC1047BCD	229
2SC1047BD	229
2SC1047C	229
2SC1047CD	229
2SC1047D	229
2SC1047E	229
2SC1048	154
2SC1048B	154
2SC1048C	154
2SC1048D	154
2SC1048E	154
2SC1048F	154
2SC1048N	154
2SC1050	162
2SC1050C	162
2SC1050D	162
2SC1050E	162
2SC1050F	162
2SC1051	280
2SC1051C	280
2SC1051D	280
2SC1051E	280
2SC1051F	280
2SC1051LC	280
2SC1051LD	280
2SC1051LE	280
2SC1051LF	280
2SC1056	154
2SC1057K	198
2SC1057L	198
2SC1057M	198
2SC1059	124
2SC1060	152
2SC1060A	152
2SC1060B	152
2SC1060BM	152
2SC1060C	152
2SC1060D	152
2SC1061	152
2SC1061A	152
2SC1061B	152
2SC1061BT	152
2SC1061C	152
2SC1061D	152
2SC1061T	152
2SC1061T-B	152
2SC1061TB	152
2SC1070	161
2SC1071	123A
2SC1072	128
2SC1072A	128
2SC1078	124
2SC1079	280
2SC1079R	280
2SC1079Y	280
2SC1080	280
2SC1080R	280
2SC1080Y	280
2SC1086	165
2SC1086M	165
2SC1089	154
2SC1089B	154
2SC1089BD	171
2SC1089C	154
2SC1089D	154
2SC1090	154
2SC1090D	154
2SC1093/3ZL	165
2SC1095	186A
2SC1095(6)	186A
2SC1095L	186A
2SC1095M	186A
2SC1096	186A
2SC1096-3SL	186A
2SC1096-3ZL	186A
2SC1096/3ZL	186A
2SC1096(3ZL)	186A
2SC1096-3ZM	186A
2SC1096-4ZL	186A
2SC1096A	186A
2SC1096B	186A
2SC1096C	186A
2SC1096D	186A
2SC1096E	186A
2SC1096K	186A
2SC1096L	186A
2SC1096LM	186A
2SC1096M	186A
2SC1096(M)	186A
2SC1096N	186A
2SC1096S	186A
2SC1096W	186A
2SC1096ZL	186A
2SC1098	186A
2SC1098(4)K	186
2SC1098(4)L	186
2SC1098A	186A

To Be Replaced	ECG Replacement
2SC1098B	186A
2SC1098C	186A
2SC1098D	186A
2SC1098K	186A
2SC1098L	186A
2SC1098M	186A
2SC1099	165
2SC1099K	165
2SC1100	165
2SC1101	164
2SC1101A	164
2SC1101B	164
2SC1101C	164
2SC1101D	164
2SC1101E	164
2SC1101F	164
2SC1101L	164
2SC1102	124
2SC1102A	124
2SC1102B	124
2SC1102C	124
2SC1102K	124
2SC1102L	124
2SC1102M	124
2SC1102(M)	124
2SC1103	154
2SC1103A	154
2SC1103(A)	154
2SC1103B	154
2SC1103C	154
2SC1103L	154
2SC1104	124
2SC1104A	124
2SC1104B	124
2SC1104C	124
2SC1104K	286
2SC1104L	286
2SC1105	124
2SC1105A	124
2SC1105B	124
2SC1105C	124
2SC1105K	124
2SC1105L	124
2SC1105M	124
2SC1106	162
2SC1106A	162
2SC1106B	162
2SC1106C	162
2SC1106K	162
2SC1106L	162
2SC1106M	162
2SC1106P	162
2SC1106Q	162
2SC1107	291
2SC1107Q	196
2SC1108	291
2SC1109	291
2SC1111	280
2SC1112	284
2SC1114	283
2SC1115	280
2SC1116	284
2SC1116-0	154
2SC1117	161
2SC1123	107
2SC1124	198
2SC1124E	171
2SC1124JA	171
2SC1124JD	171
2SC1126	107
2SC1127	190
2SC1127E	171
2SC1127H	171
2SC1127HE	171
2SC1127JR	171
2SC1128	161
2SC1128(3rd IF)	233
2SC1128D	123A
2SC1128(Final IF)	233
2SC1128H	161
2SC1128(M)	161
2SC1128S(3rdIF)	233
2SC1128(S)	161
2SC1129	161
2SC1129(M)	161
2SC1129R	161
2SC1129(R)	161
2SC1141	283
2SC1142	283
2SC1143	283
2SC1151	164
2SC1151A	164
2SC1152	162
2SC1152F	162
2SC1152G	162
2SC1153	165
2SC1154	163A
2SC1155	190
2SC1156	190
2SC1157	190
2SC1158	108
2SC1159	107
2SC1160	175
2SC1160K	175
2SC1160L	175
2SC1161	175
2SC1162	184
2SC1162-0	184
2SC1162A	184
2SC1162B	184
2SC1162C	184
2SC1162C(RF PWR)	299
2SC1162CP	184
2SC1162D	184
2SC1162MP	184

To Be Replaced	ECG Replacement
2SC1162-0	184
2SC1162(RF PWR)	299
2SC1162WB	184
2SC1162WBP	184
2SC1162WT	184
2SC1162WTA	184
2SC1162WTB	184
2SC1162WTC	184
2SC1162WTD	184
2SC1166	297
2SC1166-0	297
2SC1166D	297
2SC1166GR	297
2SC1166O	297
2SC1166-O	297
2SC1166-O	297
2SC1166R	297
2SC1166X	297
2SC1166Y	297
2SC1166-Y	297
2SC1167	238
2SC1168	124
2SC1168X	124
2SC1170	238
2SC1170A	238
2SC1170B	389
2SC1170B/FA-2	238
2SC1171	165
2SC1172	238
2SC1172A	238
2SC1172B	238
2SC1173	152
2SC1173-0	152
2SC1173A	152
2SC1173C	152
2SC1173-GR	152
2SC1173L	152
2SC1173M	152
2SC1173-O	152
2SC1173-R	152
2SC1173R	152
2SC1173(RF PWR)	236
2SC1173X	152
2SC1173X0	152
2SC1173X(RF PWR)	236
2SC1173XO	152
2SC1173-Y	152
2SC1173Y	152
2SC1173Y(Audio)	152
2SC1174	238
2SC1175	123AP
2SC1175C	123A
2SC1175D	123A
2SC1175E	123A
2SC1175F	123A
2SC1180	229
2SC1182B	161
2SC1182C	161
2SC1182D	161
2SC1184	164
2SC1184A	164
2SC1184B	164
2SC1184C	164
2SC1184D	164
2SC1184E	164
2SC1185	162
2SC1185A	162
2SC1185B	162
2SC1185C	162
2SC1185K	162
2SC1185 L	162
2SC1185L	162
2SC1185M	162
2SC1187	229
2SC1189K	229
2SC1189L	229
2SC1189M	229
2SC1195	162
2SC1195FA-1	162
2SC1195/FA-1	162
2SC1196	186A
2SC1204	199
2SC1204B	199
2SC1204C	199
2SC1204D	199
2SC1205	108
2SC1205A	108
2SC1205B	108
2SC1205C	108
2SC1209	297
2SC1209C	297
2SC1209D	297
2SC1209E	297
2SC1210	287
2SC1210C	287
2SC1210D	287
2SC1210E	287
2SC1211	293
2SC1211C	293
2SC1211D	293
2SC1211E	293
2SC1212	184
2SC1212A	184
2SC1212AA	184
2SC1212AB	184
2SC1212ABWT	184
2SC1212AC	184
2SC1212ACWT	184
2SC1212AD	184
2SC1212AWT	184
2SC1212AWTA	184
2SC1212AWTB	184

To Be Replaced	ECG Replacement
2SC1212AWTC	184
2SC1212AWTD	184
2SC1212B	184
2SC1212C	184
2SC1212D	184
2SC1212WT	184
2SC1212WTA	184
2SC1212WTB	184
2SC1212WTC	184
2SC1212WTD	184
2SC1213	289
2SC1213A	289
2SC1213AA	289
2SC1213AB	289
2SC1213AC	289
2SC1213AD	289
2SC1213AK	289
2SC1213AKA	289
2SC1213AKB	289
2SC1213AKC	289
2SC1213AKD	289
2SC1213B	289
2SC1213BC	289
2SC1213C	289
2SC1213CD	289
2SC1213D	289
2SC1214	289
2SC1214A	289
2SC1214B	289
2SC1214C	289
2SC1214D	289
2SC1215	107
2SC1216	278
2SC1217	171
2SC1218	128
2SC1220-003	128
2SC1220E	128
2SC1222	199
2SC1222A	199
2SC1222B	199
2SC1222C	199
2SC1222D	199
2SC1222E	199
2SC1222U	199
2SC1226	186A
2SC1226-0	186A
2SC1226A	186A
2SC1226AC	186A
2SC1226AP	186A
2SC1226AQ	186A
2SC1226AR	186A
2SC1226B	186A
2SC1226C	186A
2SC1226CF	186A
2SC1226D	186A
2SC1226F	186A
2SC1226L	186A
2SC1226O	186A
2SC1226P	186A
2SC1226Q	186A
2SC1226QR	186A
2SC1226R	186A
2SC1226RL	186A
2SC1226RLP	186A
2SC1226RLQ	186A
2SC1226RLR	186A
2SC1226SC	186A
2SC1232	289
2SC1235	124
2SC1235AL	124
2SC1235AM	124
2SC1237	235
2SC1237E	235
2SC1237H	235
2SC1237K	235
2SC1239	237
2SC1241	284
2SC1241A	284
2SC1243	300
2SC1243-24	300
2SC1243C	300
2SC1243C1	300
2SC1243C2	300
2SC1243D	300
2SC1243D1	300
2SC1243D2	300
2SC1243E	300
2SC1244	123A
2SC1247	128
2SC1247A	128
2SC1257	349
2SC1258	350
2SC1260	316
2SC1273	289
2SC1275	316
2SC1278	194
2SC1278S	194
2SC1279	287
2SC1279S	287
2SC1280	172A
2SC1280A	172A
2SC1280AS	172A
2SC1280S	172A
2SC1293	233
2SC1293A	233
2SC1293A(Last IF)	233
2SC1293B	233
2SC1293B(Last IF)	233
2SC1293C	233
2SC1293C(3rd IF)	233
2SC1293D	233
2SC1295	165
2SC1295A	165
2SC1295-O	165
2SC1296	163A

To Be Replaced	ECG Replacement
2SC1303	346
2SC1304	124
2SC1304BK	124
2SC1306	235
2SC1306/1	235
2SC1306-1	235
2SC1306I	235
2SC1306K	235
2SC1307	236
2SC1307-1	236
2SC1307K	236
2SC1308	238
2SC1308K	238
2SC1308N	238
2SC1309	165
2SC1312	199
2SC1312E	199
2SC1312F	199
2SC1312G	199
2SC1312H	199
2SC1312R	199
2SC1312Y	199
2SC1312YF	199
2SC1312YG	199
2SC1312YH	199
2SC1313	199
2SC1313F	199
2SC1313G	199
2SC1313H	199
2SC1313Y	199
2SC1313YE	199
2SC1313YG	199
2SC1313YH	199
2SC1316	277
2SC1317	289
2SC1317B	289
2SC1317D	289
2SC1317P	289
2SC1317Q	289
2SC1317R	289
2SC1317S	289
2SC1317T	289
2SC1318	297
2SC1318P	297
2SC1318PQR	297
2SC1318Q	297
2SC1318QR	297
2SC1318R	297
2SC1318S	297
2SC1318T	297
2SC1318X	297
2SC1320K	107
2SC1324	278
2SC1325	165
2SC1325A	165
2SC1325AK	165
2SC1325AL	165
2SC1326	278
2SC1327	199
2SC1327FS	199
2SC1327R	199
2SC1327S	199
2SC1327T	199
2SC1327T/U	199
2SC1327TU	199
2SC1327TV	199
2SC1327U	199
2SC1327XAN	199
2SC1327Y	199
2SC1328	199
2SC1328T	199
2SC1328U	199
2SC1330	192A
2SC1330A	192A
2SC1330B	192A
2SC1330C	192A
2SC1330D	192A
2SC1330L	192A
2SC1330R	192A
2SC1335	199
2SC1335A	199
2SC1335B	199
2SC1335C	199
2SC1335D	199
2SC1335E	199
2SC1335F	199
2SC1336Q	186A
2SC1342	229
2SC1342A	229
2SC1342B	229
2SC1342C	229
2SC1343	280
2SC1343A	280
2SC1343B	280
2SC1343C	280
2SC1343H	280
2SC1343HA	280
2SC1343HB	280
2SC1344	199
2SC1344C	199
2SC1344D	199
2SC1344E	199
2SC1344F	199
2SC1345	199
2SC1345C	199
2SC1345D	199
2SC1345E	199
2SC1345F	199
2SC1346	192A
2SC1346Q	192A
2SC1346R	192A
2SC1346S	192A
2SC1347	192A
2SC1347Q	192A
2SC1347R	192A

To Be Replaced	ECG Replacement
2SC1347S	192A
2SC1348	163A
2SC1358	165
2SC1358A	165
2SC1358K	165
2SC1358K1	165
2SC1358K2	165
2SC1358K3	165
2SC1358L	238
2SC1358M	238
2SC1358P	165
2SC1358Q	165
2SC1358R	165
2SC1359	229
2SC1359A	229
2SC1359B	229
2SC1359b	199
2SC1359BC	229
2SC1359C	229
2SC1359D	229
2SC1359Q	229
2SC1360	107
2SC1360I	107
2SC1361	123A
2SC1362	199
2SC1363	123A
2SC1364	123A
2SC1364-4	123A
2SC1364-6	123A
2SC1364A	123A
2SC1364P	123A
2SC1367	164
2SC1367A	164
2SC1368	184
2SC1368B	184
2SC1368C	184
2SC1368D	184
2SC1368P	184
2SC1369	199
2SC1372Y	123A
2SC1377	236
2SC1382	157
2SC1382-0	157
2SC1382-O	157
2SC1382Y	157
2SC1383	293
2SC1383B	293
2SC1383C	293
2SC1383P	293
2SC1383PQR	293
2SC1383Q	293
2SC1383R	293
2SC1383RS	293
2SC1383S	293
2SC1383X	293
2SC1384	293
2SC1384Q	293
2SC1384R	293
2SC1384S	293
2SC1390	123A
2SC1390F	123A
2SC1390H	123A
2SC1390I	123A
2SC1390J	123A
2SC1390K	123A
2SC1390L	123A
2SC1390V	123A
2SC1390W	123A
2SC1390WH	123A
2SC1390WI	123A
2SC1390WX	123A
2SC1390X	123A
2SC1390XJ	123A
2SC1390XK	123A
2SC1390Y	123A
2SC1390YM	123A
2SC1391	124
2SC1391VL	124
2SC1393	229
2SC1393K	229
2SC1393L	229
2SC1393M	229
2SC1394	107
2SC1394L	107
2SC1395	107
2SC1396	316
2SC1396M	316
2SC1398	152
2SC1398P	152
2SC1398Q	152
2SC1399E	199
2SC1402	280
2SC1406	192A
2SC1406P	192A
2SC1407	192A
2SC1407P	192A
2SC1407Q	192A
2SC1407R	192A
2SC1407S	192A
2SC1407X	192A
2SC1409	291
2SC1409A	291
2SC1409AA	291
2SC1409AB	291
2SC1409AC	291
2SC1409B	291
2SC1409C	291
2SC1410	291
2SC1410A	291
2SC1410AA	291
2SC1410AB	291
2SC1410AC	291
2SC1410B	291
2SC1410C	291
2SC1413	165

To Be Replaced	ECG Replacement
2SC1413A	165
2SC1416	199
2SC1416BL	199
2SC1417	107
2SC1417C	107
2SC1417D	107
2SC1417D(U)	107
2SC1417DU	107
2SC1417F	107
2SC1417G	107
2SC1417H	107
2SC1417U	107
2SC1417V	107
2SC1417VW	107
2SC1417W	107
2SC1418	152
2SC1418A	152
2SC1418B	152
2SC1418C	152
2SC1418D	152
2SC1419	152
2SC1419A	152
2SC1419B	152
2SC1419C	152
2SC1419D	152
2SC1424	316
2SC1429	128
2SC1429-1	128
2SC1429-2	128
2SC1433	283
2SC1436	283
2SC1440	283
2SC1441	283
2SC1444	291
2SC1446	198
2SC1446B	198
2SC1446C	198
2SC1446L	198
2SC1446LB	198
2SC1446LL	198
2SC1446P	198
2SC1446PQ	198
2SC1446Q	198
2SC1446R	198
2SC1447-0	198
2SC1447A	198
2SC1447BK	198
2SC1447/FA-2	198
2SC1447GL3	198
2SC1447LB	198
2SC1447-O	198
2SC1447R	198
2SC1448	291
2SC1448A	291
2SC1448LB	291
2SC1448P	291
2SC1448Q	291
2SC1448R	291
2SC1448S	291
2SC1449	295
2SC1449(CB)	295
2SC1449L	295
2SC1449M	295
2SC1450	152
2SC1450S	152
2SC1454	162
2SC1456	124
2SC1456K	124
2SC1456L	124
2SC1456LM	124
2SC1456M	124
2SC1467	199
2SC1472K	172A
2SC1473P	287
2SC1473Q	287
2SC1473R	287
2SC1474	293
2SC1474-3	282
2SC1474-4	282
2SC1474HK	293
2SC1474J	293
2SC1474KD	293
2SC1474S	282
2SC1475	315
2SC1475-1	315
2SC1475-3	315
2SC1475-4	315
2SC1475A	315
2SC1475D	315
2SC1475E	315
2SC1475H	315
2SC1475HE	315
2SC1475J	315
2SC1477	283
2SC1501	157
2SC1501P	157
2SC1501Q	157
2SC1501R	157
2SC1505	198
2SC1505-1	198
2SC1505A	198
2SC1505I	198
2SC1505K	198
2SC1505L	198
2SC1505LA	198
2SC1505M	198
2SC1506	198
2SC1506K	198
2SC1506L	198
2SC1506M	198
2SC1507	198
2SC1507A	198
2SC1507H	198
2SC1507I	198

To Be Replaced	ECG Replacement
2SC1507K	198
2SC1507L	198
2SC1507LK	198
2SC1507LM	198
2SC1507M	198
2SC1507R	198
2SC1509	297
2SC1509P	297
2SC1509Q	297
2SC1509R	297
2SC1509S	297
2SC1514	198
2SC1514B	198
2SC1514BK	198
2SC1514BVC	198
2SC1514CVC	198
2SC1515	287
2SC1515C	287
2SC1515K	287
2SC1518	293
2SC1518R	293
2SC1518S	293
2SC1519	198
2SC1520	198
2SC1520-1	198
2SC1520-1A	198
2SC1520-3A	198
2SC1520EK	198
2SC1520EX	198
2SC1520I	198
2SC1520K	198
2SC1520K-1	198
2SC1520KL	198
2SC1520KLE	198
2SC1520L	198
2SC1520L-1	198
2SC1520M	198
2SC1520M-1	198
2SC1521K	198
2SC1521L	198
2SC1521LM	198
2SC1521M	198
2SC1537	199
2SC1537B	199
2SC1537-O	199
2SC1537S	199
2SC1538	199
2SC1538A	199
2SC1538S	199
2SC1538SA	199
2SC1541E	123A
2SC1542	123A
2SC1546	154
2SC1547	316
2SC1550	154
2SC1556	195A
2SC1566	157
2SC1566F	157
2SC1567	295
2SC1567P	295
2SC1567R	295
2SC1568	184
2SC1568R	184
2SC1568S	184
2SC1569	198
2SC1569BK	198
2SC1569/FA-1	198
2SC1569-FA3	198
2SC1569/FA-3	198
2SC1569-FA4	198
2SC1569/FA-5	198
2SC1569K	198
2SC1569LB	198
2SC1569LBO	198
2SC1569LBQ	198
2SC1569LBR	198
2SC1569LBY	198
2SC1569-O	198
2SC1569Q	198
2SC1569R	198
2SC1569-R	198
2SC1569Y	198
2SC1569-Y	198
2SC1570	123A
2SC1570G	123A
2SC1570LG	123A
2SC1570LH	123A
2SC1571	123A
2SC1571G	123A
2SC1573	287
2SC1573P	287
2SC1573PQ	287
2SC1573Q	287
2SC1573R	287
2SC1576	283
2SC1578	283
2SC1585F	107
2SC1585H	107
2SC1586	327
2SC1588	278
2SC1589	299
2SC1603	362
2SC1617	283
2SC1618	130
2SC1618B	130
2SC1618G	130
2SC1619	280
2SC1620-Y	190
2SC1624	291
2SC1624-O	291
2SC1624-Y	291
2SC1625	291
2SC1625-O	198
2SC1625-LBGL1	198

To Be Replaced	ECG Replacement
2SC1625-O	291
2SC1625YLBGL1	198
2SC1627-O	128
2SC1627-Y	128
2SC1627Y	128
2SC1628	190
2SC1628-O	190
2SC1629A	238
2SC1629M	181
2SC1632	199
2SC1633	199
2SC1634	123A
2SC1634HC	123A
2SC1634P	123A
2SC1634Y	123A
2SC1636	108
2SC1636E	108
2SC1636H	108
2SC1636Ja	108
2SC1636JA	108
2SC1636JG	108
2SC1636JK	108
2SC1639	123A
2SC1641	123A
2SC1641D	123A
2SC1641Q	123A
2SC1641R	123A
2SC1647	199
2SC1647Q	199
2SC1647R	199
2SC1647RY	199
2SC1648	199
2SC1648E	199
2SC1648EF	199
2SC1648EY	199
2SC1648RT	199
2SC1648S	199
2SC1648SE	199
2SC1648SH	199
2SC1658Q	194
2SC1663	188
2SC1663A	188
2SC1663H	188
2SC1664	274
2SC1664A	274
2SC1664O	274
2SC1664-OR	274
2SC1664OR	274
2SC1664R	274
2SC1667	284
2SC1669	198
2SC1670	293
2SC1670E	190
2SC1670H	190
2SC1670Ha	190
2SC1670HM	190
2SC1670J	190
2SC1670JA	190
2SC1670JC	190
2SC1670JD	190
2SC1670JE	190
2SC1670JW	293
2SC1672	229
2SC1673	229
2SC1673L	229
2SC1674	107
2SC1674K	107
2SC1674L	107
2SC1674M	107
2SC1674-M	107
2SC1675	229
2SC1675B	229
2SC1675K	229
2SC1675K2	229
2SC1675KZ	229
2SC1675L	229
2SC1675(L)	229
2SC1675M	229
2SC1675Z	229
2SC1676	320
2SC1678	235
2SC1678B	235
2SC1678b	235
2SC1678D	235
2SC1678E	235
2SC1678H	235
2SC1678I	235
2SC1678J	235
2SC1678L	235
2SC1678N	235
2SC1678-O	235
2SC1678T	235
2SC1679	235
2SC1681	199
2SC1681B	199
2SC1681BL	199
2SC1681GR	199
2SC1681V	199
2SC1682V	199
2SC1683A	198
2SC1683LA	198
2SC1683P	198
2SC1683Q	198
2SC1683R	198
2SC1684	199
2SC1684BL	199
2SC1684-O	199
2SC1684P	199
2SC1684Q	199
2SC1684R	199
2SC1684RST	199
2SC1684S	199
2SC1684T	199
2SC1685	199
2SC1685-O	199

To Be Replaced	ECG Replacement
2SC1685P	199
2SC1685Q	199
2SC1685R	199
2SC1685S	199
2SC1685ST	194
2SC1685T	194
2SC1686	229
2SC1686B	229
2SC1686C	229
2SC1686V	229
2SC1687	123A
2SC1687C	123A
2SC1687(Last IF)	233
2SC1687Q	123A
2SC1688	123A
2SC1689	360
2SC1695	229
2SC1722	198
2SC1722BK	198
2SC1722BKS	198
2SC1722S	198
2SC1723	198
2SC1723-02	198
2SC1728	302
2SC1728-3	302
2SC1728D	302
2SC1728H	302
2SC1729	344
2SC1730	316
2SC1730L	316
2SC1730(L)	107
2SC1738	316
2SC1739	123A
2SC1740	123AP
2SC1740C	123AP
2SC1740D	123AP
2SC1740L	123AP
2SC1740LN	123AP
2SC1740LNS	123AP
2SC1740P	123AP
2SC1740Q	123AP
2SC1740R	123AP
2SC1740RL	123AP
2SC1740RM	123AP
2SC1740S	123AP
2SC1741	293
2SC1741Q	128
2SC1749	198
2SC1749XD	198
2SC1752	287
2SC1753	287
2SC1755	198
2SC1755A	198
2SC1755C	198
2SC1756	198
2SC1756A	198
2SC1756B	198
2SC1756C	198
2SC1756D	198
2SC1756E	198
2SC1756K	198
2SC1756M	198
2SC1756MC	198
2SC1756N	198
2SC1756-O	198
2SC1757	198
2SC1760	306
2SC1760/2	306
2SC1760-2	306
2SC1760-3	306
2SC1760/4	306
2SC1760-4	306
2SC1760E	306
2SC1760H	306
2SC1760HY	306
2SC1761	306
2SC1766C	199
2SC1766D	199
2SC1773	123AP
2SC1774	123AP
2SC1775AE	123AP
2SC1775AF	123AP
2SC1775E	123AP
2SC1775F	123AP
2SC1777	130
2SC1788	128
2SC1788R	128
2SC1815	123AP
2SC1815-O	123AP
2SC1815G	123AP
2SC1815GR	123AP
2SC1815O	123AP
2SC1815Y	123AP
2SC1816	236
2SC1816E	236
2SC1816H	236
2SC1816HM	236
2SC1817	236
2SC1819	198
2SC1819RL	198
2SC1821	154
2SC1826-O	196
2SC1826F	196
2SC1826P	196
2SC1826Q	196
2SC1826R	196
2SC1826Y	196
2SC1827	291
2SC1828	369
2SC1828B	369
2SC1828R	369
2SC1829	162
2SC1829C	229
2SC1845Q	306
2SC1845R	306

To Be Replaced	ECG Replacement
2SC1845S	306
2SC1846	295
2SC1846-7	295
2SC1846B	295
2SC1846P	295
2SC1846Q	295
2SC1846-Q	295
2SC1846QRS	295
2SC1846R	295
2SC1846S	295
2SC1846-Y	295
2SC1847	295
2SC1847-0	295
2SC1847Q	295
2SC1847QR	295
2SC1847R	295
2SC1847V	295
2SC1847VQ	295
2SC1848	186A
2SC1848Q	186A
2SC1848R	186A
2SC1851	128
2SC1853B	123A
2SC1853C	123A
2SC1854	199
2SC1854C	199
2SC1854R	199
2SC1854S	199
2SC1855	108
2SC1856	123A
2SC1856M	123A
2SC1866	328
2SC1867	283
2SC1869	284
2SC1870	283
2SC1875	165
2SC1875K	165
2SC1875L	165
2SC1890A	375
2SC1890AD	375
2SC1890AE	375
2SC1890AF	375
2SC1890E	375
2SC1890F	375
2SC1891	165
2SC1893	165
2SC1893FA-1	165
2SC1894	238
2SC1894K	238
2SC1894N	238
2SC1900	108
2SC1903	306
2SC1905	198
2SC1905(LB)	198
2SC1906	108
2SC1906A	108
2SC1906B	108
2SC1906K	108
2SC1908	229
2SC1908E	229
2SC1908H	229
2SC1909	235
2SC1909K	235
2SC1909R	235
2SC1909S	235
2SC1921	191
2SC1922	238
2SC1923	229
2SC1923-0	229
2SC1923A	229
2SC1923BN	229
2SC1923R	229
2SC1929	198
2SC1929Q	198
2SC1929R	198
2SC1941	287
2SC1942	165
2SC1944	236
2SC1945	236
2SC1945A	236
2SC1946	344
2SC1952	295
2SC1957	295
2SC1957B	295
2SC1957K	295
2SC1959	123AP
2SC1959-0	123AP
2SC1959-Y	123AP
2SC1962	302
2SC1962-0	302
2SC1962H	302
2SC1962-O	302
2SC1964	236
2SC1964D	235
2SC1969	236
2SC1969B	236
2SC1969H	236
2SC1971	342
2SC1974	235
2SC1974-5	235
2SC1974C	235
2SC1975	235
2SC1975Q	235
2SC1976	340
2SC1978	342
2SC1983	152
2SC1990B	229
2SC2000	123A
2SC2001K	123A
2SC2001L	297
2SC2009	161
2SC2009J	161
2SC2012	107
2SC2018	283
2SC2019	283

To Be Replaced	ECG Replacement
2SC2020	235
2SC2021	123A
2SC2028	295
2SC2028/1	295
2SC2028/2	295
2SC2028-2	295
2SC2028/2	295
2SC2028A	295
2SC2028A/20	295
2SC2028B	295
2SC2028B/20	295
2SC2028-B/20	295
2SC2028-B/B/20	295
2SC2029	235
2SC2029/1	235
2SC2029-1	235
2SC2029/2	235
2SC2029/3	235
2SC2029-3	235
2SC2029B	235
2SC2029B/10	235
2SC2029-B/10	235
2SC2029B/B/10	235
2SC2029C	235
2SC2034	282
2SC2036	373
2SC2043	236
2SC2056	346
2SC2057	319
2SC2057C	319
2SC2057D	319
2SC2057F	161
2SC2060	293
2SC2060Q	293
2SC2068	198
2SC2068FA-1	198
2SC2068LB	198
2SC2073	375
2SC2073A	375
2SC2073Y	375
2SC2074	322
2SC2074C	322
2SC2074Y	322
2SC2075	235
2SC2075J	235
2SC2075K	235
2SC2076	123AP
2SC2076B	123AP
2SC2076B(CB)	295
2SC2076BC	123AP
2SC2076BC(CB)	295
2SC2076C	123AP
2SC2076C(CB)	295
2SC2076CB	123AP
2SC2076(CB)	295
2SC2076CB(CB)	295
2SC2076CD	123AP
2SC2076CD(CB)	295
2SC2076D	123AP
2SC2076D(CB)	295
2SC2078	235
2SC2078E	236
2SC2079	295
2SC2079E	295
2SC2081	293
2SC2085P	198
2SC2085PQ	198
2SC2085Q	198
2SC2086	293
2SC2086D	293
2SC2091	295
2SC2091D	295
2SC2092	235
2SC2092D	235
2SC2094	344
2SC2098	236
2SC2120	128
2SC2120-0	128
2SC2120-Y	128
2SC2120Y	297
2SC2132	366
2SC2146	235
2SC2166	235
2SC2166D	235
2SC2184	235
2SC2194	188
2SC2195	236
2SC2228	287
2SC2228C	287
2SC2228D	287
2SC2229-0	297
2SC2229-O	287
2SC2229O	287
2SC2229Y	287
2SC2236	295
2SC2236-0	295
2SC2236Y	295
2SC2237	344
2SC2242	198
2SC2258	198
2SC2314	295
2SC3068FA-1	198
2SC3721	199
2SC3721GR	199
2SC3724	123A
2SC3800	107
2SC5359	108
2SC6939GK	199
2SC7108B	123A
2SC7128D	302
2SC7160	306
2SC7335-BL	123A
2SC7336R	199
2SC7354	123A
2SC7840	229

To Be Replaced	ECG Replacement
2SC8380	108
2SC10898	171
2SC10963ZM	186A
2SC10964ZL	186A
2SC13838	128
2SC13901	123A
2SC14070	192
2SC15694	198
2SC-F8	237
2SC-NJ100	199
2SC-NJ107	128
2SCF1	108
2SCF2	123A
2SCF-2	123A
2SCF5	123A
2SCF6	195A
2SCF8	237
2SCF11	313
2SCF14	233
2SCI090B	154
2SCI520K	198
2SCNJ100	199
2SCS183E	123
2SCS184E	123
2SCS184J	108
2SCS429J	108
2SCS430H	108
2SCS461F	108
2SCS469F	108
2SD11	103
2SD12	130
2SD15	130
2SD16	130
2SD17	130
2SD18	162
2SD18(Rectifier)	116(2)
2SD19	103
2SD20	103
2SD21	103
2SD22	103
2SD23	103
2SD24	124
2SD24B	124
2SD24C	124
2SD24CK	124
2SD24D	124
2SD24E	124
2SD24F	124
2SD24K	124
2SD24KC	124
2SD24KD	124
2SD24KE	124
2SD24Y	124
2SD24Y-K	124
2SD24YB	124
2SD24YD	124
2SD24YE	124
2SD24YF	124
2SD24YK	124
2SD24YL	124
2SD24YLC	124
2SD24YLD	124
2SD24YLE	124
2SD24YM	124
2SD24YS	124
2SD25	103A
2SD26A	130
2SD26B	130
2SD26C	130
2SD28	175
2SD29	175
2SD30	103A
2SD30-0	103A
2SD30G	103A
2SD30-N	103A
2SD31	103A
2SD31D	103A
2SD32	103A
2SD33	103A
2SD33C	103A
2SD34	103A
2SD35	103A
2SD36	101
2SD37	103A
2SD37A	103A
2SD37B	103A
2SD37C	103A
2SD38	103A
2SD41	130
2SD43	101
2SD43A	101
2SD44	101
2SD45	162
2SD46	162
2SD47	328
2SD49	175
2SD50	130
2SD51	130
2SD51A	328
2SD53	130
2SD55	181
2SD55A	181
2SD56	175
2SD57	175
2SD58	175
2SD59	162
2SD60	162
2SD61	103A
2SD62	103A
2SD63	103A
2SD64	103A
2SD65	103A
2SD65-1	103A

To Be Replaced	ECG Replacement
2SD66	103A
2SD67	162
2SD67B	162
2SD67C	162
2SD67D	162
2SD67E	162
2SD68	223
2SD68B	223
2SD68C	223
2SD68D	223
2SD68E	223
2SD69	130
2SD70	175
2SD71	175
2SD71L	289
2SD72	103A
2SD72-2C	103A
2SD72-3C	103A
2SD72-4C	103A
2SD72A	103A
2SD72B	103A
2SD72BR	103A
2SD72C	103A
2SD72K	103A
2SD72P	103A
2SD72RE	103A
2SD73	280
2SD73A	280
2SD73B	280
2SD73C	280
2SD73E	280
2SD74	280
2SD74A	280
2SD74B	280
2SD74C	280
2SD74D	280
2SD74E	280
2SD75	103A
2SD75A	103A
2SD75AH	103A
2SD75B	103A
2SD75C	103A
2SD75H	103A
2SD77	103A
2SD77A	103A
2SD77AH	103A
2SD77B	103A
2SD77C	103A
2SD77D	103A
2SD77H	103A
2SD77P	103A
2SD78	282
2SD78A	282
2SD78B	282
2SD78C	282
2SD78D	282
2SD79	225
2SD79A	225
2SD79B	225
2SD79C	225
2SD79D	225
2SD80	130
2SD81	130
2SD82	130
2SD82A	130
2SD83	162
2SD84	162
2SD88	162
2SD88A	162
2SD90	152
2SD91	152
2SD91F	152
2SD92	175
2SD92D	175
2SD94	124
2SD96	103A
2SD100	103A
2SD100A	103A
2SD101	101
2SD102	175
2SD102-O	175
2SD102-R	175
2SD102-Y	175
2SD103	175
2SD103-O	175
2SD103-R	175
2SD103-Y	175
2SD104	103A
2SD105	103A
2SD110	162
2SD110-O	162
2SD110-R	162
2SD110-Y	162
2SD111	162
2SD111-O	162
2SD111-R	162
2SD111-Y	162
2SD113	181
2SD113-O	181
2SD113-R	181
2SD113-Y	181
2SD114	181
2SD114-O	181
2SD114-R	181
2SD114-Y	181
2SD118	280
2SD118BL	280
2SD118R	280
2SD118Y	280
2SD119	280
2SD119BL	280
2SD119R	280
2SD119Y	280
2SD120	282
2SD120A	282

To Be Replaced	ECG Replacement
2SD120B	282
2SD120C	282
2SD120H	282
2SD120HA	282
2SD120HB	282
2SD120HC	282
2SD121	282
2SD121A	282
2SD121B	282
2SD121H	282
2SD121HA	282
2SD121HB	282
2SD124	280
2SD124A	280
2SD124AH	280
2SD124AHA	280
2SD124AHB	280
2SD125	280
2SD125A	280
2SD125AH	280
2SD125AHA	280
2SD125AHB	280
2SD126	280
2SD126A	280
2SD126AH	280
2SD126AHA	280
2SD126AHB	280
2SD126H	280
2SD126HA	280
2SD126HB	280
2SD127	103A
2SD127A	103A
2SD128	103A
2SD128A	103A
2SD129	175
2SD129-BL	175
2SD129-R	175
2SD129-Y	175
2SD130	175
2SD130BL	175
2SD130-R	175
2SD130-Y	175
2SD130Y	175
2SD132	181
2SD134	123
2SD136	124
2SD137	124
2SD141	152
2SD141H01	152
2SD141H9Z	152
2SD142	175
2SD142M	175
2SD142(M)	175
2SD143	175
2SD144	175
2SD145	175
2SD146	130
2SD147	130
2SD150	175
2SD151	130
2SD152	164
2SD154	152
2SD155	175
2SD155H	175
2SD155K	175
2SD155L	175
2SD156	124
2SD157	124
2SD157B	124
2SD158	124
2SD159	124
2SD161	101
2SD162	101
2SD163	130
2SD164	130
2SD165	162
2SD166	162
2SD167	101
2SD170	103A
2SD170A	103A
2SD170AA	103A
2SD170AB	103A
2SD170AC	103A
2SD170B	103A
2SD170BC	103A
2SD170C	103A
2SD170PB	103A
2SD171	283
2SD173	130
2SD174	130
2SD175	130
2SD175B	130
2SD176	130
2SD177	162
2SD178	103A
2SD178A	103A
2SD178Q	103A
2SD178T	103A
2SD180	223
2SD180A	223
2SD180B	223
2SD180C	223
2SD180D	223
2SD180K	219
2SD180L	223
2SD180M	223
2SD180N	219
2SD181	162
2SD182	128
2SD183	128
2SD184	152
2SD186	103A
2SD186A	103A
2SD186B	103A
2SD187	103A

To Be Replaced	ECG Replacement
2SD187A	103A
2SD187R	103A
2SD187Y	103A
2SD188	130
2SD188A	130
2SD188B	130
2SD188C	130
2SD188M	130
2SD189	162
2SD189A	162
2SD190	124
2SD191	103A
2SD192	103A
2SD193	103A
2SD194	103A
2SD195	101
2SD195A	101
2SD198	162
2SD198AP	162
2SD198AQ	162
2SD198AR	162
2SD198H	162
2SD198HQ	162
2SD198HR	162
2SD198P	162
2SD198Q	162
2SD198R	162
2SD198S	162
2SD198V	162
2SD199	162
2SD200	165
2SD200A	165
2SD201	130
2SD201(0)	130
2SD201M	130
2SD201M0	130
2SD201M-0	130
2SD201M-Y	130
2SD201MV	130
2SD201MY	130
2SD201O	130
2SD201Q	130
2SD201Y	130
2SD202	162
2SD203	162
2SD204	128
2SD204L	128
2SD205	225
2SD211	130
2SD211-0	130
2SD211M	130
2SD211-O	130
2SD211Y	130
2SD212	130
2SD213	284
2SD214	284
2SD215	103
2SD217	162
2SD218	284
2SD218(Audio)	280
2SD218(Inverter)	162
2SD219	128
2SD220	128
2SD221	128
2SD223	224
2SD226	175
2SD226-0	175
2SD226A	175
2SD226AP	175
2SD226B	175
2SD226BP	175
2SD226O	175
2SD226P	175
2SD226Q	175
2SD227	123A
2SD227A	123A
2SD227B	123A
2SD227C	123A
2SD227D	123A
2SD227E	123A
2SD227F	123A
2SD227L	123A
2SD227MP	123A
2SD227R	123A
2SD227S	123A
2SD227V	123A
2SD227W	123A
2SD228	192
2SD231	283
2SD234	152
2SD234-0	152
2SD234-O	152
2SD234-R	152
2SD234R	152
2SD234-Y	152
2SD235	152
2SD235-0	152
2SD235D	152
2SD235G	152
2SD235GR	152
2SD235LB	152
2SD235LBY	152
2SD235-O	152
2SD235-R	152
2SD235R	152
2SD235T	152
2SD235-Y	152
2SD235Y	152
2SD236	175
2SD238	175
2SD238F	175
2SD241H	130
2SD246	165
2SD249	181
2SD251	286

To Be Replaced	ECG Replacement
2SD254	175
2SD255	175
2SD257	175
2SD258	124
2SD-258	124
2SD261	192A
2SD261A	192A
2SD261B	192A
2SD261C	192A
2SD261D	192A
2SD261E	192A
2SD261F	192A
2SD261L	192A
2SD261O	192A
2SD261P	192A
2SD261Q	192A
2SD261R	192A
2SD261(R)	192A
2SD261(U)	192A
2SD261V	192A
2SD261W	192A
2SD283	162
2SD284	162
2SD285	162
2SD287	284
2SD287A	284
2SD287B	284
2SD287C	284
2SD288	152
2SD288A	152
2SD288B	152
2SD288C	152
2SD288K	152
2SD288L	152
2SD289	152
2SD289A	152
2SD289B	152
2SD289C	152
2SD290	175
2SD290L	175
2SD291	175
2SD291A	175
2SD291(R)	175
2SD292	175
2SD297	175
2SD299	238
2SD299SL	238
2SD299V	238
2SD300	165
2SD300B	165
2SD312	164
2SD313	196
2SD313C	196
2SD313D	196
2SD313E	196
2SD313F	196
2SD313K	196
2SD314E	196
2SD315	175
2SD315D	175
2SD315F	175
2SD316	284
2SD317	152
2SD317A	152
2SD317F	152
2SD317P	152
2SD318	152
2SD318(0)	152
2SD318A	152
2SD318B	152
2SD318P	152
2SD319	181
2SD320	162
2SD321	283
2SD322	280
2SD322A	280
2SD322B	280
2SD322C	280
2SD323	280
2SD323A	280
2SD323B	280
2SD323C	280
2SD324	124
2SD325	152
2SD325C	152
2SD325D	152
2SD325E	152
2SD325E1	186
2SD325(E2)	186
2SD325EZ	152
2SD325F	152
2SD326	124
2SD327	123A
2SD327A	123A
2SD327B	123A
2SD327C	123A
2SD327D	123A
2SD327E	123A
2SD327F	123A
2SD327V	123A
2SD327Y	123A
2SD328S	210
2SD330	152
2SD330D	152
2SD330E	152
2SD330F	152
2SD334	162
2SD334A	162
2SD334R	162
2SD336	123AP
2SD336R	123AP
2SD336Y	123AP
2SD339	280
2SD340	280
2SD341	180

To Be Replaced	ECG Replacement
2SD341H	180
2SD343	152
2SD348	238
2SD350	238
2SD350Q	238
2SD351	283
2SD352	103A
2SD352D	103A
2SD352E	103A
2SD352F	103A
2SD352S	103A
2SD353	164
2SD355	297
2SD355C	297
2SD355D	297
2SD355E	297
2SD356	291
2SD356C	291
2SD356D	291
2SD356E	291
2SD357	291
2SD357C	291
2SD357D	291
2SD357E	291
2SD358	291
2SD358C	291
2SD358D	291
2SD358E	291
2SD359	152
2SD359C	152
2SD359C2	152
2SD359D	152
2SD359D1	152
2SD359D2	152
2SD359E	152
2SD360	152
2SD360C	152
2SD360D	152
2SD360E	152
2SD365	152
2SD365A	152
2SD365B	152
2SD365H	152
2SD365-0	152
2SD365P	152
2SD365Q	152
2SD366	152
2SD366-0	152
2SD366P	152
2SD366Q	152
2SD367	103A
2SD367A	103A
2SD367B	103A
2SD367C	103A
2SD367D	103A
2SD367E	103A
2SD367F	103A
2SD367P	103A
2SD370	280
2SD371	181
2SD375	328
2SD376	283
2SD376A	283
2SD379	284
2SD379P	284
2SD379Q	284
2SD379R	284
2SD379S	284
2SD380	165
2SD381	291
2SD381L	291
2SD381M	291
2SD382	152
2SD382LM	152
2SD383	283
2SD386A	375
2SD386AC	375
2SD386AD	375
2SD386AE	375
2SD386AY	375
2SD386D	375
2SD386E	375
2SD386Y	375
2SD386Y-D	375
2SD386Y-E	375
2SD387AD	375
2SD387AE	375
2SD387AF	375
2SD387AS	375
2SD387D	375
2SD387E	375
2SD387F	375
2SD388	280
2SD389	152
2SD389A	152
2SD389AF	152
2SD389AF0	152
2SD389AF-0	152
2SD389AF-P	152
2SD389AFO	152
2SD389AFP	152
2SD389AO	152
2SD389AP	152
2SD389B	152
2SD389BL	152
2SD389BLB	152
2SD389BLB-0	152
2SD389BLB-O	152
2SD389BLB-OP	152
2SD389BLB-P	152
2SD389BP	152
2SD389BQ	152
2SD389LB	152
2SD389LBQ	152
2SD389LP	152

To Be Replaced	ECG Replacement
2SD389(LP)	152
2SD389-0	152
2SD389(0)	152
2SD389-OP	152
2SD389P	152
2SD389(P)	152
2SD389Q	152
2SD390	152
2SD390(0)	152
2SD390P	152
2SD400	293
2SD400D	293
2SD400E	293
2SD400F	293
2SD400P1	293
2SD400P1D	293
2SD400P1E	293
2SD400P1F	293
2SD401	291
2SD401A	291
2SD401AK	291
2SD401AL	291
2SD401EK	291
2SD401EX	291
2SD401H	291
2SD401I	291
2SD401K	291
2SD401L	291
2SD401LA	291
2SD401M	291
2SD402	375
2SD402A	375
2SD402AK	198
2SD402AL	198
2SD402AM	198
2SD418	165
2SD423	384
2SD424	284
2SD424-0	284
2SD424-R	284
2SD425	280
2SD425O	280
2SD426	280
2SD426O	280
2SD426R	280
2SD427	280
2SD427O	280
2SD427R	280
2SD428	130
2SD438D	293
2SD438E	293
2SD458	163A
2SD461	283
2SD467	297
2SD467A	297
2SD467AC	297
2SD467B	297
2SD467-C	297
2SD467C	297
2SD467D	297
2SD468	297
2SD468A	287
2SD468B	287
2SD468C	287
2SD468D	287
2SD470	321
2SD470A	321
2SD470(Rect)	116
2SD471	293
2SD471K	293
2SD471L	293
2SD471M	293
2SD471S	293
2SD476A	196
2SD476B	196
2SD476C	196
2SD476D	196
2SD476YL	196
2SD477	152
2SD478	291
2SD478B	291
2SD478C	291
2SD478WT	291
2SD478Y	291
2SD478YL	291
2SD517	165
2SD525	196
2SD525-0	152
2SD525-O	196
2SD525R	196
2SD525Y	152
2SD526	196
2SD526-0	196
2SD526Y	196
2SD533	283
2SD541	306
2SD545	128
2SD545E	128
2SD545F	128
2SD546	175
2SD562	108
2SD570	196
2SD571	306
2SD571K	306
2SD575	165
2SD575L	165
2SD577	165
2SD581	280
2SD581A	280
2SD582	284
2SD582A	284
2SD588	380

To Be Replaced	ECG Replacement
2SD591	199
2SD591R	199
2SD591S	199
2SD599	199
2SD599E	199
2SD604	162
2SD610	286
2SD611	384
2SD612	186A
2SD612K	186A
2SD618	130
2SD625	228
2SD632P	162
2SD632Q	162
2SD632R	162
2SD636	123A
2SD636-0	123A
2SD636P	123A
2SD636Q	123A
2SD636R	123A
2SD637	194
2SD637P	194
2SD637Q	194
2SD637R	194
2SD637S	194
2SD637T	194
2SD639	128
2SD639P	128
2SD639Q	128
2SD639R	128
2SD649	165
2SD656	175
2SD666	382
2SD666A	382
2SD666C	194
2SD667	382
2SD667A	382
2SD668	373
2SD668A	373
2SD669	373
2SD669A	373
2SD692	247
2SD692P	247
2SD692Q	247
2SD704	377
2SD704D	377
2SD704E	377
2SD704F	377
2SD720D	103A
2SD720E	103A
2SD735	103
2SD829	107
2SD1318	128
2SD1449	192
2SD1569K	198
2SD3601	235
2SD3890	152
2SD-F1	101
2SD-F1A	102A
2SDF1	101
2SDF45	219
2SE629	108
2SE4002	199
2SF8	282
2SF11	5481
2SF12	5482
2SF14	5483
2SF16	5484
2SF17	5485
2SF18	5485
2SF19	5486
2SF20	5480
2SF21	5501
2SF22	5502
2SF23	5503
2SF24	5504
2SF25	5505
2SF26	5506
2SF27	5507
2SF28	5507
2SF29	5508
2SF30	5500
2SF31	5541
2SF31A	5541
2SF32	5542
2SF32A	5542
2SF33	5543
2SF33A	5543
2SF34	5543
2SF34A	5543
2SF35	5544
2SF35A	5544
2SF36	5544
2SF36A	5544
2SF37	5545
2SF37A	5545
2SF38	5545
2SF38A	5545
2SF39	5546
2SF39A	5546
2SF40	5540
2SF40A	5540
2SF55	5520
2SF56	5521
2SF57	5522
2SF58	5523
2SF59	5524
2SF60	5525
2SF61	5526
2SF62	5527
2SF63	5500
2SF64	5501
2SF65	5502
2SF66	5503
2SF67	5504

To Be Replaced	ECG Replacement
2SF68	5505
2SF69	5506
2SF70	5507
2SF71	5520
2SF72	5521
2SF73	5522
2SF74	5523
2SF75	5524
2SF76	5526
2SF77	5527
2SF78	5501
2SF79	5502
2SF80	5504
2SF81	5506
2SF82	5507
2SF83	5508
2SF84	5541
2SF84A	5541
2SF85	5542
2SF85A	5542
2SF86	5543
2SF86A	5543
2SF87	5544
2SF87A	5544
2SF88	5545
2SF88A	5545
2SF89	5546
2SF89A	5546
2SF98	5523
2SF99	5525
2SF100	5483
2SF101	5401
2SF102	5402
2SF102A	5402
2SF103	5403
2SF104	5404
2SF105	5405
2SF106	5405
2SF107	5405
2SF108	5405
2SF109	5406
2SF110	5406
2SF110O	5455
2SF131	5540
2SF132	5541
2SF133	5542
2SF134	5543
2SF135	5543
2SF136	5544
2SF137	5545
2SF138	5546
2SF139	5528
2SF140	5500
2SF141	5501
2SF142	5502
2SF143	5503
2SF144	5504
2SF145	5505
2SF146	5506
2SF147	5507
2SF148	5508
2SF149	5529
2SF200	5486
2SF201	5487
2SF205	5508
2SF206	5529
2SF207	5530
2SF208	5531
2SF210	5546
2SF210A	5546
2SF211	5547
2SF211A	5547
2SF215	5528
2SF216	5529
2SF217	5546
2SF218	5547
2SF221	5480
2SF222	5481
2SF223	5482
2SF224	5483
2SF225	5483
2SF226	5484
2SF227	5485
2SF228	5486
2SF229	5403
2SF230	5520
2SF231	5521
2SF232	5522
2SF233	5523
2SF234	5524
2SF235	5525
2SF236	5526
2SF237	5527
2SF238	5540
2SF239	5541
2SF240	5542
2SF241	5543
2SF242	5543
2SF243	5544
2SF244	5544
2SF245	5545
2SF248	314
2SF248A	314
2SF250	5480
2SF251	5481
2SF252	5482
2SF253	5483
2SF254	5483
2SF255	5484
2SF256	5484
2SF257	5485
2SF258	5485
2SF259	5486
2SF260	5480
2SF261	5481

To Be Replaced	ECG Replacement
2SF262	5482
2SF263	5483
2SF264	5483
2SF265	5484
2SF266	5484
2SF267	5485
2SF268	5485
2SF269	5486
2SF280	5520
2SF281	5521
2SF282	5522
2SF283	5523
2SF284	5524
2SF285	5525
2SF286	5526
2SF287	5527
2SF288	5527
2SF289	5528
2SF290	5540
2SF291	5541
2SF292	5542
2SF293	5543
2SF294	5543
2SF295	5544
2SF296	5544
2SF297	5545
2SF298	5545
2SF299	5546
2SF321A	5480
2SF322A	5481
2SF323A	5482
2SF324A	5483
2SF325A	5483
2SF326A	5484
2SF327A	5484
2SF328A	5485
2SF329A	5486
2SF330A	5487
2SF380	5491
2SF381	5491
2SF382	5492
2SF382A	5492
2SF383	5494
2SF383A	5494
2SF384	5494
2SF384A	5494
2SF385	5496
2SF385A	5496
2SF386	5496
2SF388	5547
2SF388A	5547
2SF431	5528
2SF432	5529
2SF433	5530
2SF434	5531
2SF438	5530
2SF439	5531
2SF501	5504
2SF502	5506
2SF503	5507
2SF504	5508
2SF505	5501
2SF506	5502
2SF507	5504
2SF508	5506
2SF509	5507
2SF521	5401
2SF522	5402
2SF523	5404
2SF524	5405
2SF525	5405
2SF526	5406
2SF527	5406
2SF545	5482
2SF546	5483
2SF547	5486
2SF567	5492
2SF572	5404
2SF609	5514
2SF610	5515
2SF611	5515
2SF613	5504
2SF614	5506
2SF615	5507
2SF616	5508
2SF618	5543
2SF619	5544
2SF620	5545
2SF623	5517
2SF624	5518
2SF625	5518
2SF627	5543
2SF628	5544
2SF629	5545
2SF630	5546
2SF631	5547
2SF656	5402
2SF657	5402
2SF658	5404
2SF659(GAK)	5405
2SF664S	5402
2SF665	5481
2SF666	5482
2SF667	5483
2SF668	5485
2SF674S	5402
2SF676S	5402
2SF752	5524
2SF753	5526
2SF754	5527
2SF755	5528
2SF756	5529
2SF941	5454
2SF942	5455
2SF944(GAK)	5402

To Be Replaced	ECG Replacement
2SF945(GAK)	5404
2SF946(KAG)	5402
2SF947(KAG)	5404
2SF948(KAG)	5405
2SF949(KAG)	5405
2SF1089	5483
2SF1090	5484
2SF1091	5485
2SF1092	5486
2SF1094	5472
2SF1095	5473
2SF1096	5474
2SF1097	5475
2SF1099	5454
2SF1100	5455
2SF1110	5401
2SF1111(GAK)	5402
2SF1112	5404
2SF1113(GAK)	5405
2SF1114(GAK)	5405
2SF1139	5456
2SF1140	5457
2SF1169	5402
2SF1170	5404
2SF1171	5405
2SF1172	5405
2SF1177	5402
2SF1178	5404
2SF1179	5530
2SF1180	5531
2SF1188	230
2SF1188A	230
2SF1188B	230
2SF1188C	230
2SF1188D	230
2SF1188E	230
2SF1188F	230
2SF1188G	230
2SF1188H	230
2SF1188K	230
2SF1188L	230
2SF1188M	230
2SF1188N	230
2SF1188R	230
2SF1188Y	230
2SF1189	231
2SF1189A	231
2SF1189C	231
2SF1189D	231
2SF1189E	231
2SF1189F	231
2SF1189G	231
2SF1189H	231
2SF1189K	231
2SF1189L	231
2SF1189M	231
2SF1189N	231
2SF1189R	231
2SF1189Y	231
2SF1271	5400
2SF1422	230
2SF1422A	230
2SF1422B	230
2SF1422C	230
2SF1422D	230
2SFT212	121
2SG536GN	123A
2SH11	6401
2SH12	6400
2SH18	6401
2SH18K	6401
2SH18L	6401
2SH18M	6401
2SH18N	6401
2SH19	6401
2SH19K	6401
2SH19L	6401
2SH19M	6401
2SH19N	6401
2SH20	6401
2SH21	6400
2SH22	6409
2SH203	100
2SH643	193
2SJ2A	116
2SJ4A	116
2SJ8A	125
2SJ11	133
2SJ12	133
2SJ60A	116
2SK11	132
2SK11-0	132
2SK11-R	132
2SK11-Y	132
2SK12	132
2SK12-GR	132
2SK12-O	132
2SK12-R	132
2SK12-Y	132
2SK13	132
2SK15-GR	132
2SK15-O	132
2SK15-R	132
2SK15-Y	132
2SK16	312
2SK16H	312
2SK16HB	312
2SK16HC	312
2SK16S	312
2SK17	132
2SK17-0	457
2SK17A	132
2SK17B	132
2SK17BL	132
2SK17GR	456

To Be Replaced	ECG Replacement
2SK17R	132
2SK17Y	457
2SK19	453
2SK19BL	453
2SK19GB	453
2SK19GC	453
2SK19GE	453
2SK19-GR	453
2SK19GR	453
2SK19(GR)	453
2SK19H	453
2SK19K	453
2SK19V	453
2SK19Y	453
2SK22Y	132
2SK23	132
2SK23A	312
2SK23A-540	312
2SK23A540	312
2SK24	133
2SK24C	133
2SK24D	133
2SK24DR	133
2SK24E	133
2SK24F	133
2SK24G	133
2SK25	132
2SK25C	132
2SK25D	132
2SK25E	132
2SK25ET	132
2SK25F	132
2SK25G	132
2SK30	132
2SK30-0	132
2SK30A	132
2SK30A-O	132
2SK30A-Y	132
2SK30AD	132
2SK30AGR	132
2SK30AY	132
2SK30D	132
2SK30-GR	132
2SK30GR	132
2SK30-O	132
2SK30-R	132
2SK30Y	132
2SK30-Y	132
2SK30(Y)	132
2SK31	132
2SK31C	132
2SK32B	132
2SK33	312
2SK33B	312
2SK33D	312
2SK33E	312
2SK33(E)	312
2SK33F	312
2SK33GR	312
2SK33H	132
2SK33R	312
2SK34	132
2SK34B	132
2SK34C	132
2SK34D	132
2SK34E	132
2SK34(E)	132
2SK34GR	132
2SK35	451
2SK35-0	133
2SK35-1	133
2SK35-2	133
2SK35A	133
2SK35BL	133
2SK35C	133
2SK35GN	133
2SK35R	133
2SK35Y	133
2SK37	132
2SK37H	132
2SK37K	132
2SK37L	132
2SK39	132
2SK39P	221
2SK40	133
2SK40-3	133
2SK40A	133
2SK40B	133
2SK40C	133
2SK40D	133
2SK40-OR	133
2SK41	312
2SK41C	312
2SK41D	312
2SK41E	312
2SK41E2	312
2SK41F	312
2SK42	132
2SK42-CM1	132
2SK42CM1	132
2SK43	133
2SK44	133
2SK44C	133
2SK44D	133
2SK45B	220
2SK45B-09	222
2SK47	312
2SK47M	312
2SK49	312
2SK49E	312
2SK49E2	312
2SK49F	312
2SK49H	312
2SK49H1	312
2SK49H2	132

To Be Replaced	ECG Replacement
2SK49HI	132
2SK49HK	312
2SK49I	312
2SK49M	312
2SK49-OF	312
2SK49Q	132
2SK54	312
2SK54B	312
2SK55	312
2SK55C	312
2SK55D	312
2SK55-DE	312
2SK55DE	312
2SK55E	312
2SK55R	312
2SK61	312
2SK61GR	312
2SK61Y	312
2SK66	312
2SK66Q	312
2SK68	312
2SK68-1	133
2SK68A	312
2SK68A-M	312
2SK68A(M)	312
2SK68AL	133
2SK68AM	312
2SK68L	133
2SK68-L	133
2SK68M	312
2SK68Y	312
2SK69	312
2SK69A	133
2SK69M	133
2SK79BL	312
2SK83	312
2SK84	312
2SK104	312
2SK104H	312
2SK106	133
2SK170	132
2SK170R	132
2SK304	132
2SK550	312
2SK1033B	312
2SM14	5662
2SM15	5663
2SM16	5666
2SM24	5662
2SM25	5663
2SM26	5666
2SM71	5662
2SM72	5663
2SM73	5675
2SM74	5675
2SM85	5673
2SM86	5675
2SM87	5675
2SM92	5673
2SM93	5675
2SM94	5675
2SM98	5683
2SM99	5684
2SM100	5685
2SM104	5683
2SM105	5684
2SM106	5685
2SM112	5641
2SM113	5642
2SM114	5683
2SM115	5684
2SM116	5685
2SM117	5686
2SM610B	159
2SQ371	108
2SR05K	116
2SR1K	116
2SV341V	127
2SVC10	116
2T3	102A
2T11	158
2T12	158
2T13	158
2T14	158
2T14A	126
2T15	158
2T16	158
2T17	158
2T20	160
2T21	158
2T22	158
2T23	158
2T24	158
2T25	158
2T26	158
2T40	123A
2T41	123A
2T42	123A
2T43	123A
2T44	123A
2T51	103
2T52	101
2T53	101
2T54	101
2T55	101
2T56	101
2T57	101
2T58	101
2T61	103
2T62	103
2T63	103
2T64	103
2T64R	103
2T65	103
2T65R	103

To Be Replaced	ECG Replacement
2T66	103
2T66R	103
2T67	101
2T69	103
2T71	101
2T72	101
2T73	101
2T73R	101
2T74	101
2T75	101
2T75R	101
2T76	101
2T76R	101
2T77	101
2T77R	101
2T78	101
2T78R	101
2T82	101
2T83	101
2T84	103
2T85	103
2T85A	103
2T86	103
2T89	103
2T172	123A
2T201	160
2T202	123A
2T203	160
2T204	160
2T204A	160
2T205	160
2T205A	160
2T230	102
2T231	102
2T311	158
2T312	158
2T313	158
2T314	158
2T315	158
2T321	158
2T322	158
2T323	158
2T324	158
2T383	158
2T402	123
2T403	123A
2T404	123A
2T501	116
2T502	116
2T503	116
2T504	116
2T505	116
2T506	116
2T507	125
2T508	125
2T509	125
2T510	125
2T513	101
2T520	101
2T521	101
2T522	103
2T523	103
2T524	101
2T551	101
2T552	103
2T650	101
2T681	103
2T682	103
2T918	123A
2T919	107
2T2001	102
2T2708	123A
2T2785	123A
2T2857	123A
2T3011	121
2T3021	121
2T3022	121
2T3030	121
2T3031	121
2T3032	121
2T3033	121
2T3041	121
2T3042	121
2T3043	121
2TN15	100
2TN32	100
2TN45A	102
2TN48	100
2TN49	100
2TN52	100
2TN53	100
2TN56	102
2TN95	102
2TN95A	102
2V362	102
2V363	102
2V464	100
2V465	100
2V466	100
2V467	100
2V482	100
2V483	100
2V484	100
2V485	160
2V486	100
2V559	160
2V560	160
2V561	160
2V562	160
2V563	160
2V631	100
2V632	100
2V633	100
2VR5.6	5117A
2VR5.6A	5117A

To Be Replaced	ECG Replacement
2VR5.6B	5117A
2VR6	5118A
2VR6A	5118A
2VR6B	5118A
2VR6.2	5118A
2VR6.2A	5118A
2VR6.2B	5119A
2VR6.8	5120A
2VR6.8A	5120A
2VR6.8B	5120A
2VR7.5	5121A
2VR7.5A	5121A
2VR7.5B	5121A
2VR8.2	5122A
2VR8.2A	5122A
2VR8.2B	5122A
2VR8.5	5123A
2VR8.5A	5123A
2VR8.5B	5123A
2VR9.1	5124A
2VR9.1A	5124A
2VR9.1B	5124A
2VR10	5125A
2VR10A	5125A
2VR10B	5125A
2VR11	5126A
2VR11A	5126A
2VR11B	5126A
2VR12	5127A
2VR12A	5127A
2VR12B	5127A
2VR13	5128A
2VR13A	5128A
2VR13B	5128A
2VR13R	5128A
2VR14	5129A
2VR14A	5129A
2VR14B	5129A
2VR15	5130A
2VR15A	5130A
2VR15B	5130A
2VR16	5131A
2VR16A	5131A
2VR16B	5131A
2VR18	5133A
2VR18A	5133A
2VR18B	5133A
2VR20	5135A
2VR20A	5135A
2VR20B	5135A
2VR22	5136A
2VR22A	5136A
2VR22B	5136A
2VR24	5137A
2VR24A	5137A
2VR24B	5137A
2VR27	5139A
2VR27A	5139A
2VR27B	5139A
2VR28	5140A
2VR28A	5140A
2VR28B	5140A
2VR30	5141A
2VR30A	5141A
2VR30B	5141A
2VR33	5142A
2VR33A	5142A
2VR33B	5142A
2VR36	5143A
2VR36A	5143A
2VR36B	5143A
2VR39	5144A
2VR39A	5144A
2VR39B	5144A
2VR43	5145A
2VR43A	5145A
2VR43B	5145A
2VR47	5146A
2VR47A	5146A
2VR47B	5146A
2VR51	5147A
2VR51A	5147A
2VR51B	5147A
2VR56	5148A
2VR56A	5148A
2VR56B	5148A
2VR62	5150A
2VR62A	5150A
2VR62B	5150A
2VR67	5151A
2VR67A	5151A
2VR67B	5151A
2VR68	5151A
2VR68A	5151A
2VR68B	5151A
2VR75	5152A
2VR75A	5152A
2VR75B	5152A
2VR80	5153A
2VR80A	5153A
2VR80B	5153A
2VR82	5153A
2VR82A	5153A
2VR82B	5153A
2VR90	5155A
2VR90A	5155A
2VR90B	5155A
2VR91	5155A
2VR91A	5155A
2VR91B	5155A
2VR100	5156A
2VR100A	5156A
2VR100B	5156A
2VR110	5157A
2VR110A	5157A

To Be Replaced	ECG Replacement
2VR110B	5157A
2VR120	5158A
2VR120A	5158A
2VR120B	5158A
2VR130	5159A
2VR130A	5159A
2VR130B	5159A
2VR150	5161A
2VR150A	5161A
2VR150B	5161A
2VR160	5162A
2VR160A	5162A
2VR160B	5162A
2VR180	5164A
2VR180A	5164A
2VR180B	5164A
2VR200	5166A
2VR200A	5166A
2VR200B	5166A
2W3A	116
2W4A	116
2W5A	116
2W6A	125
2W7A	125
2W9A	125
2WMT1	5942
2WMT2	5945
2WMT4	5948
2WMT6	5952
2WMT8	5998
2WMT10	6002
2X9A116	116
2XAA111	109
2XAA112	109
2XAA113	109
2.01.03.02	159
3-0033	123A
3-041	129
3-7	129
3-19	124
3-20	127
3-215	129
3-233	197
3-1477	5804
3-30173	181
3A1	156
3A15	5800
3A30	5800
3A90	109
3A100	156
3A152	116
3A154	116
3A156	116
3A158	125
3A200	116
3A252	116
3A254	116
3A256	116
3A258	125
3A300	5803
3A500	5805
3A1510	125
3A2510	125
3AF2	156
3AF4	5803
3AF6	5806
3AF8	5808
3AS1	116
3AS2	116
3B15	102
3B15-1	102
3BB-20B01	166
3BF1	156
3BF2	156
3BF4	156
3BF6	156
3BF8	156
3BF10	156
3BS1	116
3BS2	116
3BZ61	156
3C05	5830
3C05R	5831
3C1	5982
3C2	5986
3C4	5990
3C6	5994
3C8	5998
3C10	6002
3C10R	5833
3C15	5834
3C15R	5835
3C20	5834
3C20R	5835
3C30	5836
3C30R	5837
3C38(Transistor)	108
3C40	5838
3C40R	5839
3C50	5840
3C50R	5841
3C60	5842
3C60R	5843
3C70	5846
3C70R	5847
3C80	5846
3C80R	5847
3C90	5848
3C90R	5849
3C100	5848
3C100R	5849
3C6030	5400
3C6100	5454
3CS1	116
3CS2	116

To Be Replaced	ECG Replacement
3D-702	5081A
3DS1	116
3DS2	116
3DS3	156
3E05	5800
3E-1	123A
3E2	5802
3E-2	123A
3E-3	123A
3E-4	109
3E6	5806
3E8	5808
3E10	5809
3E-27	102A
3E-28	158
3E-29	158
3E-64	116
3E-65	116
3ES1	116
3ES2	116
3EZ3.9D5	5113A
3EZ4.3D5	5114A
3EZ4.7D5	5115A
3EZ5.1D5	5116A
3EZ5.6D5	5117A
3EZ6.2D5	5119A
3EZ6.8D5	5120A
3EZ7.5D5	5121A
3EZ8.2D5	5122A
3EZ9.1D5	5124A
3EZ10D5	5125A
3EZ11D5	5126A
3EZ12D5	5127A
3EZ13D5	5128A
3EZ14D5	5129A
3EZ15D5	5130A
3EZ16D5	5131A
3EZ17D5	5132A
3EZ18D5	5133A
3EZ19D5	5134A
3EZ20D5	5135A
3EZ22D5	5136A
3EZ24D5	5137A
3EZ27D5	5139A
3EZ30D5	5141A
3EZ33D5	5142A
3EZ36D5	5143A
3EZ39D5	5144A
3EZ43D5	5145A
3EZ47D5	5146A
3EZ51D5	5147A
3EZ56D5	5148A
3EZ62D5	5150A
3EZ68D5	5151A
3EZ75D5	5152A
3EZ82D5	5153A
3EZ91D5	5155A
3EZ100D5	5156A
3EZ110D5	5157A
3EZ120D5	5158A
3EZ130D5	5159A
3EZ140D5	5160A
3EZ150D5	5161A
3EZ160D5	5162A
3EZ170D5	5163A
3EZ180D5	5164A
3EZ200D5	5166A
3F5	5830
3F5-D	5830
3F10	5832
3F10D	5832
3F10D-C	5832
3F15	5834
3F20	5834
3F20D	5834
3F20D-C	5834
3F30	5836
3F30D	5836
3F30(SCR)	5400
3F40	5835
3F40D	5838
3F40D-C	5838
3F50	5840
3F50D	5840
3F60	5842
3F60D	5842
3F60(SCR)	5401
3F80	5846
3F80D	5846
3F100	5848
3F100D	5848
3F100(SCR)	5402
3F150(SCR)	5403
3F200(SCR)	5404
3FR5	5831
3FR10	5833
3FR15	5835
3FR20	5835
3FR30	5837
3FR40	5839
3FR50	5841
3FR60	5843
3FR80	5847
3FR100	5849
3FS1	116
3FS2	116
3G2	457
3G8	116
3G152	116
3G154	116
3G156	116
3G158	125
3G252	116
3G254	116
3G256	116

To Be Replaced	ECG Replacement
3G258	125
3G1510	125
3G2510	125
3GA	116
3GC12	5838
3GS1	116
3GS2	116
3HS1	116
3HS2	116
3J15	5400
3J30	5400
3J60	5401
3J100	5402
3JC12	5842
3K15	5400
3L4-60II-9	153
3L4-2001-1	109
3L4-2001-1A	109
3L4-2001-3	177
3L4-2001-4	177
3L4-2003-1	109
3L4-2003-3	109
3L4-2003-4	109
3L4-2003-7	109
3L4-2003-10	177
3L4-3001-1	177
3L4-3001-5	116
3L4-3001-7	177
3L4-3001-8	116
3L4-3002-01	519
3L4-3002-4	177
3L4-3002-5	177
3L4-3002-7	177
3L4-3002-7(Silicon)	177
3L4-3002-10	177
3L4-3002-20	177
3L4-3002-22	177
3L4-3002-25	177
3L4-3002-28	177
3L4-3002-31	177
3L4-3002-32	177
3L4-3002-33	177
3L4-3503-5	614
3L4-3503-6	614
3L4-3503-7	614
3L4-3505-1	5072A
3L4-3505-2	5071A
3L4-3505-3	138A
3L4-3505-4	5074A
3L4-3506-2	5071A
3L4-3506-3	138A
3L4-3506-7	5072A
3L4-3506-12	5071A
3L4-3506-21	136A
3L4-3506-29	145A
3L4-3506-31	136A
3L4-3506-40	5075A
3L4-3506-43	5071A
3L4-3506-49	146A
3L4-6001-01	130
3L4-6004	175
3L4-6005-1	152
3L4-6005-2	184
3L4-6005-3	184
3L4-6005-5	152
3L4-6005-55	152
3L4-6006-1	124
3L4-6007-02	123A
3L4-6007-03	123A
3L4-6007-04	123A
3L4-6007-08	123A
3L4-6007-09	123A
3L4-6007-1	123A
3L4-6007-2	123A
3L4-6007-3	123A
3L4-6007-4	128
3L4-6007-10	161
3L4-6007-11	161
3L4-6007-12	161
3L4-6007-13	161
3L4-6007-14	161
3L4-6007-15	199
3L4-6007-16	199
3L4-6007-17	107
3L4-6007-19	161
3L4-6007-20	161
3L4-6007-21	107
3L4-6007-22	161
3L4-6007-23	107
3L4-6007-34	159
3L4-6007-35	107
3L4-6007-37	123A
3L4-6007-38	123A
3L4-6007-41	229
3L4-6007-42	128
3L4-6007-51	108
3L4-6007-i7	107
3L4-6010-03	123A
3L4-6010-4	129
3L4-6010-6	123A
3L4-6010-8	129
3L4-6010-13	153
3L4-6011-02	129
3L4-6011-1	196
3L4-6011-2	211
3L4-6011-3	211
3L4-6011-9	153
3L4-6011-9(Transistor)	153
3L4-6011-11	153
3L4-6011-12	153
3L4-6011-14	153
3L4-6011-52	211
3L4-6011-53	211
3L4-6012-02	152
3L4-6012-06	196

To Be Replaced	ECG Replacement
3L4-6012-2	152
3L4-6012-3	152
3L4-6012-4	182
3L4-6012-5	196
3L4-6012-6	196
3L4-6012-8	196
3L4-6012-55	196
3L4-6012-56	196
3L4-6012-58	196
3L4-6013-02	153
3L4-6013-2	153
3L4-6013-3	153
3L4-6013-4	183
3L4-6013-5	153
3L4-6013-6	197
3L4-6013-8	197
3L4-6013-13	153
3L4-6013-15	153
3L4-6013-55	153
3L4-6013-56	153
3L4-6013-58	153
3L4-6015-01	123A
3L4-6017-01	159
3L4-6020-01	238
3L4-6021-01	247
3L4-6024-1	269
3L4-6503-1	222
3L4-6503-2	222
3L4-7004-1	6402
3L4-9002-01	786
3L4-9002-1	786
3L4-9004-01	743
3L4-9004-1	743
3L4-9004-3	743
3L4-9004-4	743
3L4-9004-6	743
3L4-9004-51	743
3L4-9006-01	726
3L4-9006-1	726
3L4-9006-51	726
3L4-9007-01	737
3L4-9007-1	737
3L4-9007-51	737
3L4-9008-01	789
3L4-9008-1	789
3L4-9008-51	789
3L4-9013-01	9946
3L4-9014-01	788
3L4-9014-02	788
3L4-9020	1232
3L4-9020-1	1232
3L 4.3503-5	112
3L1030	5400
3L2015	5400
3L49007-51	737
3LB-0650(Transistor)	152
3LC12	5846
3MA	118
3MC	160
3MS5	116
3MS10	116
3MS20	116
3MS30	116
3MS40	116
3MS50	116
3N22	101
3N23	101
3N23A	101
3N23B	101
3N23C	101
3N29	101
3N30	101
3N31	101
3N34	160
3N35	123A
3N35A	160
3N36	101
3N37	101
3N49	105
3N50	105
3N51	105
3N52	105
3N71	107
3N72	107
3N73	107
3N90	159
3N91	159
3N92	159
3N93	159
3N94	159
3N95	159
3N112	106
3N113	106
3N128	220
3N140	221
3N142	220
3N143	220
3N152	220
3N159	454
3N175	465
3N176	465
3N177	465
3N187	222
3N200	454
3N201	454
3N201A	222
3N202	454
3N203	454
3N204	454
3N205	454
3N206	454
3N207	463
3N208	463
3N213	222
3NC12	5848

To Be Replaced	ECG Replacement
3NV15	525
3R7.5	5121A
3R7.5A	5121A
3R7.5B	5121A
3R8.2	5122A
3R8.2A	5122A
3R8.2B	5122A
3R9.1	5124A
3R9.1A	5124A
3R9.1B	5124A
3R10	5125A
3R10A	5125A
3R10B	5125A
3R11	5126A
3R11A	5126A
3R11B	5126A
3R12	5127A
3R12A	5127A
3R12B	5127A
3R13	5128A
3R13A	5128A
3R13B	5128A
3R15	5130A
3R15A	5130A
3R15B	5130A
3R16	5131A
3R16A	5131A
3R16B	5131A
3R18	5133A
3R18A	5133A
3R18B	5133A
3R20	5135A
3R20A	5135A
3R20B	5135A
3R22	5136A
3R22A	5136A
3R22B	5136A
3R24	5137A
3R24A	5137A
3R24B	5137A
3R27	5139A
3R27A	5139A
3R27B	5139A
3R30	5141A
3R30A	5141A
3R30B	5141A
3R33	5142A
3R33A	5142A
3R33B	5142A
3R35	5143A
3R35A	5143A
3R35B	5143A
3R36	5143A
3R39A	5144A
3R39B	5144A
3R43	5145A
3R43A	5145A
3R43B	5145A
3R47	5146A
3R47A	5146A
3R47B	5146A
3R51	5147A
3R51A	5147A
3R51B	5147A
3R56	5148A
3R56A	5148A
3R56B	5148A
3R62	5150A
3R62A	5150A
3R62B	5150A
3R68	5151A
3R68A	5151A
3R68B	5151A
3R75	5152A
3R75A	5152A
3R75B	5152A
3R82	5153A
3R82A	5153A
3R82B	5153A
3R91	5155A
3R91A	5155A
3R91B	5155A
3R100	5156A
3R100A	5156A
3R100B	5156A
3R110	5157A
3R110A	5157A
3R110B	5157A
3R120	5158A
3R120A	5158A
3R120B	5158A
3R130	5159A
3R130A	5159A
3R130B	5159A
3R140	5160A
3R140A	5160A
3R140B	5160A
3R150	5161A
3R150A	5161A
3R150B	5161A
3R160	5162A
3R160A	5162A
3R160B	5162A
3R180	5164A
3R180A	5164A
3R180AB	5164A
3R180B	5164A
3R200	5166A
3R200A	5166A
3R200B	5166A
3RC2	5470
3RC5	5470
3RC5A	5470
3RC10	5471

To Be Replaced	ECG Replacement
3RC10A	5471
3RC15	5472
3RC15A	5472
3RC20	5472
3RC20A	5472
3RC25	5473
3RC30	5473
3RC30A	5473
3RC40	5474
3RC40A	5474
3RC50	5475
3RC50A	5475
3RC60	5476
3RC60A	5476
3RL5A	5470
3RL10A	5471
3RL20A	5472
3RL30A	5473
3RL40A	5474
3RL50A	5475
3RL60A	5476
3S004	123A
3S05E	5800
3S1E	5801
3S2E	5802
3S3E	5803
3S4E	5804
3S5E	5805
3S6E	5806
3S30B	132
3SA324	160
3SB347	102A
3SB629	116
3SB-B732	116
3SD313	196
3SD313C	196
3SF11	239
3SF11P	239
3SF11Q	239
3SK14	220
3SK20	221
3SK20H	457
3SK20HW	221
3SK20HY	221
3SK21	222
3SK21H	457
3SK22	451
3SK22-Y	221
3SK22-Y	222
3SK22Y	222
3SK23	451
3SK28	451
3SK29	220
3SK30	132
3SK30A	132
3SK30B	132
3SK30C	132
3SK32	221
3SK32A	221
3SK32B	221
3SK32B-6	221
3SK32C	221
3SK32D	221
3SK32E	221
3SK32E-4	221
3SK33	220
3SK34	222
3SK35	221
3SK35-BL	221
3SK35G	221
3SK35-GR	221
3SK35-Y	221
3SK37	222
3SK39	222
3SK39E	222
3SK39P	222
3SK39P2	222
3SK39Q	222
3SK39R	222
3SK40	221
3SK40I	221
3SK40K	222
3SK40L	221
3SK40M	221
3SK40ML	222
3SK41	221
3SK41C	221
3SK41L	221
3SK41(L)	221
3SK41M	221
3SK44	222
3SK44W	222
3SK45	222
3SK45B	222
3SK45-B	222
3SK45-B-0	222
3SK45B09	222
3SK45B-09	222
3SK45-B-09	222
3SK45-B09	222
3SK45B(09)	222
3SK49	222
3SK49Q	222
3SK51	222
3SK53	222
3SK59	222
3SK59BL	222
3SK59GR	222
3SK59GR1	222
3SK59GR2	222
3SK59Y	222
3SK60	222
3SK390	221
3SM4	5804
3SM5	6400

To Be Replaced	ECG Replacement
3T6.2	5180A
3T6.2A	5180A
3T6.2B	5180A
3T7.5	5182A
3T7.5A	5182A
3T7.5B	5182A
3T9.1	5185A
3T9.1A	5185A
3T9.1B	5185A
3T11	5187A
3T11A	5187A
3T11B	5187A
3T12	5188A
3T12A	5188A
3T12B	5188A
3T13	5189A
3T13B	5189A
3T16	5192A
3T16A	5192A
3T16B	5192A
3T20	5196A
3T20A	5196A
3T20B	5196A
3T24	5198A
3T24A	5198A
3T24B	5198A
3T30	5202A
3T30A	5202A
3T30B	5141A
3T33	5203A
3T33A	5203A
3T33B	5203A
3T36	5204A
3T36A	5204A
3T36B	5204A
3T39	5205A
3T39A	5205A
3T39B	5205A
3T43	5206A
3T43A	5206A
3T43B	5206A
3T47	5208A
3T47A	5208A
3T47B	5208A
3T51	5210A
3T51A	5210A
3T51B	5210A
3T56	5212A
3T56A	5212A
3T56B	5212A
3T62A	5214A
3T62B	5214A
3T68	5215A
3T68B	5215A
3T75	5216A
3T75A	5216A
3T75B	5216A
3T82	5217A
3T82A	5217A
3T82B	5217A
3T91	5219A
3T100	5220A
3T100A	5220A
3T100B	5220A
3T110	5222A
3T110A	5222A
3T110B	5222A
3T120	5223A
3T120A	5223A
3T120B	5223A
3T130	5224A
3T130A	5224A
3T130B	5224A
3T150	5226A
3T150A	5226A
3T150B	5226A
3T160	5227A
3T160A	5227A
3T160B	5227A
3T180	5230A
3T180A	5230A
3T180B	5230A
3T200	5232A
3T200A	5232A
3T200B	5232A
3T201	101
3T202	101
3T203	101
3T501	116
3T502	116
3T503	116
3T504	116
3T505	116
3T506	116
3T507	125
3T508	125
3T509	125
3T510	125
3TCRA	5470
3TCRB	5470
3TCRC	5471
3TCRD	5472
3TCRE	5472
3TCRF	5473
3TCRG	5473
3TCRH	5474
3TCRI	5475
3TE120	130
3TE140	130
3TE230	130
3TE240	130
3TX003	130
3TX004	130
3TX620	362
3TX621	362

To Be Replaced	ECG Replacement
3TX622	363
3TX820	362
3TX822	363
3TZ3.6	5112A
3TZ3.6A	5112A
3TZ3.6B	5112A
3TZ3.6C	5112A
3TZ3.6D	5112A
3TZ3.9	5113A
3TZ3.9A	5113A
3TZ3.9B	5113A
3TZ3.9C	5113A
3TZ3.9D	5113A
3TZ4.3	5114A
3TZ4.3A	5114A
3TZ4.3B	5114A
3TZ4.3C	5114A
3TZ4.3D	5114A
3TZ4.7	5115A
3TZ4.7A	5115A
3TZ4.7B	5115A
3TZ4.7C	5115A
3TZ4.7D	5115A
3TZ5.1	5116A
3TZ5.1A	5116A
3TZ5.1B	5116A
3TZ5.1C	5116A
3TZ5.1D	5116A
3TZ5.6	5117A
3TZ5.6A	5117A
3TZ5.6B	5117A
3TZ5.6C	5117A
3TZ5.6D	5117A
3TZ6.2	5119A
3TZ6.2A	5119A
3TZ6.2B	5119A
3TZ6.2C	5119A
3TZ6.2D	5119A
3TZ6.8	5120A
3TZ6.8A	5120A
3TZ6.8B	5120A
3TZ6.8C	5120A
3TZ6.8D	5120A
3TZ7.5	5121A
3TZ7.5A	5121A
3TZ7.5B	5121A
3TZ7.5C	5121A
3TZ7.5D	5121A
3TZ8.2	5122A
3TZ8.2A	5122A
3TZ8.2B	5122A
3TZ8.2C	5122A
3TZ8.2D	5122A
3TZ9.1	5124A
3TZ9.1A	5124A
3TZ9.1B	5124A
3TZ9.1C	5124A
3TZ9.1D	5124A
3TZ10	5125A
3TZ10A	5125A
3TZ10B	5125A
3TZ10C	5125A
3TZ10D	5125A
3TZ11	5126A
3TZ11A	5126A
3TZ11B	5126A
3TZ11C	5126A
3TZ11D	5126A
3TZ12	5127A
3TZ12A	5127A
3TZ12B	5127A
3TZ12C	5127A
3TZ12D	5127A
3TZ13	5128A
3TZ13A	5128A
3TZ13B	5128A
3TZ13C	5128A
3TZ13D	5128A
3TZ14	5129A
3TZ14A	5129A
3TZ14B	5129A
3TZ14C	5129A
3TZ14D	5129A
3TZ15	5130A
3TZ15A	5130A
3TZ15B	5130A
3TZ15C	5130A
3TZ15D	5130A
3TZ16	5131A
3TZ16A	5131A
3TZ16B	5131A
3TZ16C	5131A
3TZ16D	5131A
3TZ17	5132A
3TZ17A	5132A
3TZ17B	5132A
3TZ17C	5132A
3TZ17D	5132A
3TZ18	5133A
3TZ18A	5133A
3TZ18B	5133A
3TZ18C	5133A
3TZ18D	5133A
3TZ19	5134A
3TZ19A	5134A
3TZ19B	5134A
3TZ19C	5134A
3TZ19D	5134A
3TZ20	5135A
3TZ20A	5135A
3TZ20B	5135A
3TZ20C	5135A
3TZ20D	5135A
3TZ22	5136A
3TZ22A	5136A

To Be Replaced	ECG Replacement
3TZ22B	5136A
3TZ22C	5136A
3TZ22D	5136A
3TZ24	5137A
3TZ24A	5137A
3TZ24B	5137A
3TZ24C	5137A
3TZ24D	5137A
3TZ27	5139A
3TZ27A	5139A
3TZ27B	5139A
3TZ27C	5139A
3TZ27D	5139A
3TZ30	5141A
3TZ30A	5141A
3TZ30B	5141A
3TZ30C	5141A
3TZ30D	5141A
3TZ33	5142A
3TZ33A	5142A
3TZ33B	5142A
3TZ33C	5142A
3TZ33D	5142A
3TZ36	5143A
3TZ36A	5143A
3TZ36B	5143A
3TZ36C	5143A
3TZ36D	5143A
3TZ39	5144A
3TZ39A	5144A
3TZ39B	5144A
3TZ39C	5144A
3TZ39D	5144A
3TZ43	5145A
3TZ43A	5145A
3TZ43B	5145A
3TZ43C	5145A
3TZ43D	5145A
3TZ47	5146A
3TZ47A	5146A
3TZ47B	5146A
3TZ47C	5146A
3TZ47D	5146A
3TZ50	5147A
3TZ50A	5147A
3TZ50B	5147A
3TZ50C	5147A
3TZ50D	5147A
3TZ51	5147A
3TZ51A	5147A
3TZ51B	5147A
3TZ51C	5147A
3TZ51D	5147A
3TZ56	5148A
3TZ56A	5148A
3TZ56B	5148A
3TZ56C	5148A
3TZ56D	5148A
3TZ62	5150A
3TZ62A	5150A
3TZ62B	5150A
3TZ62C	5150A
3TZ62D	5150A
3TZ68	5151A
3TZ68A	5151A
3TZ68B	5151A
3TZ68C	5151A
3TZ68D	5151A
3TZ75	5152A
3TZ75A	5152A
3TZ75B	5152A
3TZ75C	5152A
3TZ75D	5152A
3TZ82	5153A
3TZ82A	5153A
3TZ82B	5153A
3TZ82C	5153A
3TZ82D	5153A
3TZ91	5155A
3TZ91A	5155A
3TZ91B	5155A
3TZ91C	5155A
3TZ91D	5155A
3TZ100	5156A
3TZ100A	5156A
3TZ100B	5156A
3TZ100C	5156A
3TZ100D	5156A
3TZ110	5157A
3TZ110A	5157A
3TZ110B	5157A
3TZ110C	5157A
3TZ110D	5157A
3TZ120	5158A
3TZ120A	5158A
3TZ120B	5158A
3TZ120C	5158A
3TZ120D	5158A
3TZ130	5159A
3TZ130A	5159A
3TZ130B	5159A
3TZ130C	5159A
3TZ130D	5159A
3TZ140	5160A
3TZ140A	5160A
3TZ140B	5160A
3TZ140C	5160A
3TZ140D	5160A
3TZ150	5161A
3TZ150A	5161A
3TZ150B	5161A
3TZ150C	5161A
3TZ150D	5161A
3TZ160	5162A
3TZ160A	5162A

To Be Replaced	ECG Replacement
3TZ160B	5162A
3TZ160C	5162A
3TZ160D	5162A
3TZ180	5164A
3TZ180A	5164A
3TZ180B	5164A
3TZ180C	5164A
3TZ180D	5164A
3TZ200	5166A
3TZ200A	5166A
3TZ200B	5166A
3TZ200C	5166A
3TZ200D	5166A
3V160B	5162A
3VR5.6	5117A
3VR5.6A	5117A
3VR5.6B	5117A
3VR6	5118A
3VR6A	5118A
3VR6B	5118A
3VR6.2	5119A
3VR6.2A	5119A
3VR6.2B	5119A
3VR6.8	5120A
3VR6.8A	5120A
3VR6.8B	5120A
3VR7.5	5121A
3VR7.5A	5121A
3VR7.5B	5121A
3VR8.2	5122A
3VR8.2A	5122A
3VR8.2B	5122A
3VR8.5	5123A
3VR8.5A	5123A
3VR8.5B	5123A
3VR9.1	5124A
3VR9.1A	5124A
3VR9.1B	5124A
3VR10	5125A
3VR10A	5125A
3VR10B	5125A
3VR11	5126A
3VR11A	5126A
3VR11B	5126A
3VR12	5127A
3VR12A	5127A
3VR12B	5127A
3VR13	5128A
3VR13A	5128A
3VR13B	5128A
3VR15	5130A
3VR15A	5130A
3VR15B	5130A
3VR16	5131A
3VR16A	5131A
3VR16B	5131A
3VR18	5133A
3VR18A	5133A
3VR18B	5133A
3VR20	5135A
3VR20A	5135A
3VR20B	5135A
3VR22	5136A
3VR22A	5136A
3VR22B	5136A
3VR24	5137A
3VR24A	5137A
3VR24B	5137A
3VR27	5139A
3VR27A	5139A
3VR27B	5139A
3VR30	5141A
3VR30A	5141A
3VR30B	5141A
3VR33	5142A
3VR33A	5142A
3VR33B	5142A
3VR36	5143A
3VR36A	5143A
3VR36B	5143A
3VR39	5144A
3VR39A	5144A
3VR39B	5144A
3VR43	5145A
3VR43A	5145A
3VR43B	5145A
3VR47	5146A
3VR47A	5146A
3VR47B	5146A
3VR51	5147A
3VR51A	5147A
3VR51B	5147A
3VR56	5148A
3VR56A	5148A
3VR56B	5148A
3VR62	5150A
3VR62A	5150A
3VR62B	5150A
3VR67	5151A
3VR67A	5151A
3VR67B	5151A
3VR68	5151A
3VR68A	5151A
3VR68B	5151A
3VR75	5152A
3VR75A	5152A
3VR75B	5152A
3VR82	5153A
3VR82A	5153A
3VR82B	5153A
3VR90	5155A
3VR90A	5155A
3VR90B	5155A
3VR91	5155A
3VR91A	5155A

To Be Replaced	ECG Replacement
3VR91B	5155A
3VR100	5156A
3VR100A	5156A
3VR100B	5156A
3VR110	5157A
3VR110A	5157A
3VR110B	5157A
3VR120	5158A
3VR120A	5158A
3VR120B	5158A
3VR130	5159A
3VR130A	5159A
3VR130B	5159A
3VR150	5161A
3VR150A	5161A
3VR150B	5161A
3VR160	5162A
3VR160A	5162A
3VR160B	5162A
3VR180	5164A
3VR180A	5164A
3VR180B	5164A
3VR200	5166A
3VR200A	5166A
3VR200B	5166A
3Z3.3T5	5111A
3Z3.6T5	5112A
3Z3.9T5	5174A
3Z3.9T10	5174AK
3Z3.9T20	5174AK
3Z4.3T5	5114A
3Z4.3T10	5175A
3Z4.3T20	5175A
3Z4.7T5	5176A
3Z4.7T10	5176AK
3Z4.7T20	5176AK
3Z5.1T5	5116A
3Z5.1T10	5177A
3Z5.1T20	5177A
3Z5.6T5	5178A
3Z5.6T10	5178A
3Z5.6T20	5178A
3Z6.2T5	5180A
3Z6.2T10	5180A
3Z6.2T20	5180A
3Z6.8	5120A
3Z6.8A	5120A
3Z6.8B	5120A
3Z6.8T5	5181A
3Z6.8T10	5181A
3Z6.8T20	5181A
3Z7.5T5	5182A
3Z7.5T10	5182A
3Z7.5T20	5182A
3Z8.2T5	5183A
3Z8.2T10	5183A
3Z8.2T20	5183A
3Z9.0	5124A
3Z9.0A	5124A
3Z9.0B	5124A
3Z9.1T5	5185A
3Z9.1T10	5185A
3Z9.1T20	5185A
3Z10T5	5186A
3Z10T10	5186A
3Z10T20	5186A
3Z11T5	5187A
3Z11T10	5187A
3Z11T20	5187A
3Z12	5127A
3Z12A	5127A
3Z12B	5127A
3Z12T5	5188A
3Z12T10	5188A
3Z12T20	5188A
3Z13T5	5189A
3Z13T10	5189AK
3Z13T20	5189AK
3Z15	5130A
3Z15A	5130A
3Z15B	5130A
3Z15T5	5191A
3Z15T10	5191A
3Z15T20	5191A
3Z16T5	5192A
3Z16T10	5192A
3Z16T20	5192A
3Z18	5133A
3Z18A	5133A
3Z18B	5133A
3Z18T5	5133A
3Z18T10	5194A
3Z20T5	5196A
3Z20T10	5196AK
3Z20T20	5196AK
3Z21	5135A
3Z21A	5135A
3Z21B	5135A
3Z22T5	5197A
3Z22T10	5197A
3Z22T20	5197A
3Z24	5137A
3Z24A	5137A
3Z24B	5137A
3Z24T5	5198A
3Z24T10	5198A
3Z24T20	5198A
3Z27	5139A
3Z27A	5139A
3Z27B	5139A
3Z27T5	5200A
3Z27T10	5200A
3Z27T20	5200A
3Z30	5141A
3Z30A	5141A

To Be Replaced	ECG Replacement
3Z30B	5141A
3Z30T5	5202A
3Z30T10	5202A
3Z30T20	5202A
3Z33	5142A
3Z33A	5142A
3Z33B	5142A
3Z33T5	5203A
3Z33T10	5203A
3Z36	5143A
3Z36A	5143A
3Z36B	5143A
3ZZ16	5181A
33.58MC	358
4-005	725
4-006	725
4-007	703A
4-008	703A
4-009	720
4-003721-00	175
4-082-664-0001	704
4-0294	130
4-0485	108
4-0498	128
4-0563	130
4-08018-667	9910
4-4A-1A7-1	121
4-6B-3A7-1	121MP
4-8P-2A7-1	102A
4-9L-4A7-1	102A
4-12-1A7-1	123A
4-14A17-1	121
4-44-0012-PT2	160
4-46	199
4-47(Sears)	123A
4-48	226MP
4-48(Sears)	226MP
4-50(Sears)	116
4-65-1A7-1	160
4-65-2A7-1	103A
4-65-4A7-1	101
4-65A17-1	160
4-65B17-1	160
4-65C17-1	121
4-66-1A7-1	102A
4-66-2A7-1	102A
4-66-3A7-1	102A
4-74-3A7-1	100
4-77A17-1	105
4-77B17-1	121MP
4-77C17-1	121
4-88A17-1	121
4-88B17-1	160
4-88C17-1	100
4-92-1A7-1	105
4-142	131
4-142-1(Sears)	176
4-202A16	109
4-202R101	116
4-245	181
4-265	175
4-274	128
4-279	126
4-280	126
4-282	109
4-283	185
4-288	128
4-324	133
4-397	128
4-398	128
4-399	108
4-400	108
4-432	160
4-433	108
4-434	108
4-435	104
4-436(Sears)	136A
4-438	124
4-443	108
4-458	181
4-464	152
4-490	181
4-850	107
4-851	123A
4-852	109
4-853	109
4-854	109
4-855	109
4-856	5072A
4-857	109
4-1000-08444	129
4-1001	128
4-1002-04603	233
4-1002-04613	229
4-1002-09005	199
4-1002-09452	199
4-1002-13422	229
4-1004-00553	312
4-1201-20760	177
4-1204-27909	613
4-1205-01200	142A
4-1301-04002	116
4-1520-00150	1027
4-1540-011560	801
4-1540-11370	788
4-1540-11510	1237
4-1544	199
4-1545	123A
4-1546	176
4-1723	5067A
4-1724	177
4-1726	177
4-1790	123A
4-1791	199
4-1792	192

To Be Replaced	ECG Replacement
4-1807	116
4-1848	131MP
4-2020	109
4-2020-03-700	506
4-2020-0500	113A
4-2020-03173	116
4-2020-03200	116
4-2020-03500	109
4-2020-03600	109
4-2020-03700	506
4-2020-03800	506
4-2020-03900	113A
4-2020-05000	113A
4-2020-05200	116
4-2020-05400	113A
4-2020-05600	110
4-2020-05800	177
4-2020-06100	177
4-2020-06200	177
4-2020-06300	119
4-2020-06400	177
4-2020-06500	506
4-2020-06600	5022A
4-2020-06700	506
4-2020-07300	116
4-2020-07500	137A
4-2020-07600	116
4-2020-07700	116
4-2020-07800	506
4-2020-07801	506
4-2020-08000	506
4-2020-08500	116
4-2020-08600	110
4-2020-09200	5077A
4-2020-09400	119
4-2020-8000	125
4-2020-8700	125
4-2020-10100	177
4-2020-11300	5071A
4-2020-11400	5071A
4-2020-11500	5074A
4-2020-11900	5077A
4-2020-12000	5077A
4-2020-12300	5074A
4-2020-12400	142A
4-2020-12501	5074A
4-2020-12700	145A
4-2020-13300	5085A
4-2020-13600	519
4-2020-14000	151A
4-2020-14100	5096A
4-2020-14400	506
4-2020-14500	116
4-2020-14600	506
4-2020-15100	506
4-2020-15600	177
4-2020-16200	177
4-2020-17200	125
4-2020-17600	116
4-2020-18500	116
4-2020-18700	177
4-2020-19400	5143A
4-2020-19500	5085A
4-2020-20100	5070A
4-2020-20500	506
4-2020-20900	506
4-2020-21000	116
4-2020-21100	156
4-2020-21700	137A
4-2020-21900	177
4-2020-22300	506
4-2020-22500	177
4-2020-22700	177
4-2020-22900	525
4-2020-23000	506
4-2020-23100	116
4-2020-23200	506
4-2020-23300	525
4-2020-23400	116
4-2020-24200	138A
4-2020-24300	5071A
4-2021	174
4-2021-04170	166
4-2021-04470	125
4-2021-04570	506
4-2021-04770	125
4-2021-04870	506
4-2021-04970	116
4-2021-05000	178MP
4-2021-05070	516
4-2021-05170	112
4-2021-05470	138A
4-2021-05870	109
4-2021-06970	506
4-2021-07370	503
4-2021-07470	177
4-2021-07570	505
4-2021-07670	177
4-2021-07970	506
4-2021-08070	505
4-2021-09370	116
4-2021-7370	503
4-2021-10470	506
4-2021-10870	5074A
4-2021-14970	506
4-2021-15770	506
4-2021-15990	116
4-2021-16670	5074A
4-2060-02300	1004
4-2060-02400	1004
4-2060-02600	1080
4-2060-02900	1080
4-2060-03900	1080
4-2060-04000	712
4-2060-04200	1094

To Be Replaced	ECG Replacement
4-2060-04300	1121
4-2060-04400	1004
4-2060-04600	712
4-2060-04700	1122
4-2060-04800	1122
4-2060-04900	1122
4-2060-05200	1159
4-2060-07200	1094
4-2060-07300	1121
4-2060-07500	1158
4-2060-09100	1183
4-2060-09200	738
4-2060-09700	738
4-2060-09800	1178
4-2060-2300	1004
4-2060-2400	1004
4-2060-12500	1216
4-2061-04970	712
4-2061-05170	749
4-2061-05370	1109
4-2061-05470	712
4-2061-05470(IC)	712
4-2061-05770	712
4-2061-05870	712
4-2073	160
4-3033	116
4-3034	177
4-3036	1029
4-5145	123A
4-68681-2	102A
4-68681-3	102A
4-68682-3	123A
4-68687-3	117
4-68689-3	125
4-68695-3	108
4-68697-3	125
4-684120-3	108
4-685285-3	108
4-686105-3	125
4-686106-3	125
4-686107-3	108
4-686108-3	108
4-686112-3	108
4-686114-3	108
4-686116-3	117
4-686118-3	108
4-686119-3	108
4-686120-3	108
4-686126-3	108
4-686127-3	108
4-686130-3	175
4-686131-3	108
4-686132-3	123A
4-686139-3	125
4-686140-3	108
4-686143-3	123A
4-686144-3	123A
4-686145-3	154
4-686147-3	117
4-686148-3	117
4-686149-3	116
4-686150-3	117
4-686151-3	117
4-686163-3	102A
4-686169-3	108
4-686170-3	129
4-686171-3	108
4-686172-3	108
4-686173-3	123A
4-686177-3	117
4-686179-3	125
4-686182-3	128
4-686183-3	123A
4-686184-3	125
4-686186-3	125
4-686189-3	125
4-686195-3	102A
4-686196-3	102A
4-686199-3	125
4-686201-3	125
4-686207-3	108
4-686208-3	108
4-686209-3	108
4-686212-3	125
4-686213-3	121
4-686224-3	108
4-686226-3	175
4-686227-3	502
4-686228-3	108
4-686229-3	129
4-686230-3	129
4-686231-3	123A
4-686232-3	154
4-686234-3	196
4-686235-3	129
4-686238-3	129
4-686244-3	108
4-686251-3	108
4-686252-3	191
4-686256-1	126
4-686256-2	126
4-686256-3	126
4-686257-3	123A
4-3022861	108
4-3023190	181
4-3023212	123A
4-3023221	123A
4-3023222	129
4-3023223	128
4-3023843	130
4-3023844	128
4-3025763	108
4-3025764	108
4-3025765	108
4-3025766	123A

To Be Replaced	ECG Replacement
4-3025767	108
4-3540012	116
4-8134842	191
4-30203845	129
4-202003571	109
4-202012000	5077A
4-202104170	116
4-202104570	506
4-202104770	158
4-202104870	506
4-202104970	177
4-202105070	174
4-202105470	138A
4-2020035000	109
4A-1	121
4A-1-70	121
4A-1-70-12	121
4A-1-70-12-7	121
4A-1A	121
4A-1A0	121
4A-1A0R	121
4A-1A1	121
4A-1A2	121
4A-1A3	121
4A-1A3P	121
4A-1A4	121
4A-1A4-7	121
4A-1A5	121
4A-1A5L	121
4A-1A6	121
4A-1A6-4	121
4A-1A7	121
4A-1A7-1	121
4A-1-A-7B	121
4A-1A8	121
4A-1A9	121
4A-1A9G	121
4A-1A19	121
4A-1A21	121
4A-1A82	121
4A8-1A5	160
4A8-1A7-1	160
4A-10	121
4A-11	121
4A-12	121
4A-13	121
4A-14	121
4A-15	121
4A-16	121
4A-17	121
4A-18	121
4A-19	121
4A132	5944
4A162	5994
4A232	5994
4A262	5994
4A1122	5994
4A2122	5994
4AJ4DX52D	116
4AJ4DX520	116
4C1	5982
4C2	5986
4C4	5990
4C6	5994
4C8	5998
4C10	6002
4C28	123A
4C29	123A
4C30	123A
4C31	123A
4D4	116
4D6	116
4D8	116
4D20	123A
4D21	123A
4D22	123A
4D24	123A
4D25	123A
4D26	123A
4G2	451
4G8	125
4G132	5994
4G162	5994
4G232	5994
4G262	5994
4G1122	5994
4G2122	5994
4GA	116
4GZ10A	5186A
4GZ10B	5186A
4GZ12A	5188A
4GZ12B	5223A
4GZ15A	5191A
4GZ15B	5226A
4GZ18A	5194A
4GZ18B	5230A
4GZ22A	5197A
4GZ27A	5200A
4GZ33A	5203A
4GZ39A	5205A
4GZ47A	5208A
4GZ56A	5212A
4GZ68A	5215A
4GZ82A	5217A
4i29200602	110
4i39104002	116
4IC-402	1095
4IC-407	1003
4IC-409	1110
4JA2FX355	116
4JA2X355	116
4JA4DR700	116
4JA4DX520	116
4JA6MR700	116
4JA10DX3	116

To Be Replaced	ECG Replacement
4JA10DX32	116
4JA10EX3	116
4JA11BX4	5874
4JA16MR700M	125
4JA27DR700	5878
4JA38DR700	5998
4JA70MR700	6156
4JA211A	116
4JB2C6	112
4JBC12	112
4-JBD1	108
4JD1A17	100
4JD1A73	102
4JD3B1	101
4JD5E29	6400
4JX1A520	102
4JX1A520B	102
4JX1A520C	102
4JX1A520D	100
4JX1A520E	100
4JX1A813	160
4JX1C707	160
4JX1C850	102
4JX1C850A	100
4JX1C1224	102
4JX1D925	102A
4JX1E596	123A
4JX1E821	100
4JX1E850	103
4JX2A60	100
4JX2A601	103
4JX2A616	103A
4JX2A801	101
4JX2A816	103
4JX2A822	103
4JX5E670	6400
4JX7A972	123A
4JX8D404	121
4JX8P404	121
4JX8P409	121
4JX11C2848	128
4JX16A567	123A
4JX16A667	123A
4JX16A667G	123A
4JX16A667O	123A
4JX16A667R	123A
4JX16A667Y	123A
4JX16A668	123A
4JX16A668G	123A
4JX16A668O	123A
4JX16A668Y	123A
4JX16A669	123A
4JX16A669G	123A
4JX16A669Y	123A
4JX16A670	123A
4JX16A670G	123A
4JX16B670B	123A
4JX16B670G	123A
4JX16B670R	123A
4JX16B670Y	123A
4JX16E3860	123A
4JX16E3890	123A
4JX16E3960	123A
4JX24X539	142A
4JX29A826	159
4JX29A829	159
4JX2816	103
4JX2825	103
4JZ4X539	142A
4JZ4XL12	142A
4K30	5400
4K60	5401
4K100	5402
4L30	5400
4L100	5402
4N25	3040
4N26	3040
4N27	3040
4N28	3040
4N35	3041
4N36	3041
4N37	3041
4RCM5	5481
4RCM30	5484
4SD46-2	109
4T6.2	137A
4T6.2A	137A
4T6.2B	137A
4T501	116
4T502	116
4T503	116
4T504	116
4T505	116
4T506	116
4T507	125
4T508	125
4T509	125
4T510	125
4W01-13	142A
4ZL	186A
5-8	23A
5-26-27	165
5-30082.1003	117
5-30082.3	125
5-30082.4	125
5-30086.1	116
5-30088.1	116
5-30088.1002	125
5-30088.1003	125
5-30088.1004	125
5-30088.2	117
5-30088.3	125
5-30094.1	116
5-30095.1	116
5-30098.1	116

To Be Replaced	ECG Replacement
5-30099.1	116
5-30099.3	116
5-30099.4	116
5-30106.1	116
5-30106.1001	125
5-30109.1	116
5-30111.1	117
5-30111.1001	125
5-30113.1	116
5-30119.1	503
5-30120.1	116
5-30122.1	117
5-30132.1	118
5-30136.T	125
5-113641	9946
5-70004503	123A
5-70005452	123A
5-70005503	123A
5-7000901504	123A
5A1	116
5A2	116
5A3	116
5A4	116
5A4D	116
5A4D-C	116
5A5	116
5A5D	116
5A6	116
5A6D	116
5A6D-C	116
5A8	125
5A8D	125
5A8DC	125
5A10	125
5A10C	125
5A10D	125
5A10D-C	125
5A15	5400
5A-D	116
5AA5-1	105
5AD8	156
5AD8DC	156
5AD10	156
5AD10C	156
5AD10D	156
5B1	116(4)
5B-1	116(4)
5B-2	116
5B2	156
5B-2-H5W	116
5B-2-H5W(Sharp)	506
5B3	116
5B4	169
5B-15H	116
5B-15H(Sharp)	506
5D1	116
5D2	116
5D-5A-L	5068A
5D8	125
5D10	125
5D46	109
5E1	116
5E2	116
5E4	116
5E5	116
5E6	125
5E8	125
5E4850/56-0002	128
5F1	5830
5F5	5850
5F15	5994
5F20	5994
5G2	451
5G8	125
5GA	116
5GB	116
5GD	116
5GF	125
5GFH	116
5GJ	125
5GJFR1N	116
5GL	116
5H	116
5H3P	5850
5H3PN	5851
5H4D1	116
5H750M	116
5J3P	5870
5J-F1	116
5K10	125
5L15	525
5L1626	7447
5M3.3ZS5	5111A
5M3.6ZS5	5112A
5M3.9ZS5	5113A
5M4.3ZS5	5114A
5M4.7ZS5	5115A
5M5.1ZS5	5116A
5M5.6ZS5	5117A
5M6.0ZS5	5118A
5M6.2ZS5	5119A
5M6.8ZS5	5120A
5M7.5ZS5	5121A
5M8.2ZS5	5122A
5M8.7Z5	5183A
5M9.1ZS5	5124A
5M10ZS5	5125A
5M11ZS5	5126A
5M12ZS5	5127A
5M13ZS5	5128A
5M14ZS5	5129A
5M15ZS5	5130A
5M16ZS5	5131A
5M17ZS5	5132A
5M18ZS5	5133A

To Be Replaced	ECG Replacement
5M19ZS5	5134A
5M20ZS5	5135A
5M22ZS5	5136A
5M24ZS5	5137A
5M25ZS5	5138A
5M27ZS5	5139A
5M28ZS5	5140A
5M30ZS5	5141A
5M33ZS5	5142A
5M36ZS5	5143A
5M39ZS5	5144A
5M40	5900
5M43ZS5	5145A
5M47ZS5	5146A
5M50	5902
5M51ZS5	5147A
5M56ZS5	5148A
5M60	5904
5M60ZS5	5149A
5M62ZS5	5150A
5M68ZS5	5151A
5M75ZS5	5152A
5M80	5908
5M82ZS5	5153A
5M87ZS5	5154A
5M91ZS5	5155A
5M100	5910
5M100ZS5	5156A
5M110ZS5	5157A
5M120ZS5	5158A
5M130ZS5	5159A
5M140ZS5	5160A
5M150ZS5	5161A
5M160ZS5	5162A
5M170ZS5	5163A
5M190ZS5	5165A
5M200ZS5	5166A
5MA2	116
5MA4	116
5MA5	116
5MA6	116
5MA8	125
5MA10	125
5MF1	116
5MS5	116
5MS10	116
5MS20	116
5MS30	116
5MS40	116
5MS50	116
5N1	116
5N2	5874
5N3	5874
5P05M	5461
5P-05M	5461
5P1M	5462
5P2	5874
5P2M	5463
5P3	5874
5P4M	5465
5Q3	5981
5RC2	5480
5RC5	5481
5RC5A	5481
5RC10	5482
5RC10A	5482
5RC10G	5483
5RC15	5483
5RC15A	5483
5RC20	5483
5RC20A	5483
5RC25	5484
5RC30	5484
5RC30A	5484
5RC40	5485
5RC40A	5485
5RC50	5486
5RC50A	5486
5RC50B	5486
5RC60	5487
5RC60A	5487
5RCL2	5480
5RCL5	5481
5RCL10	5482
5RCL15	5483
5RCL20	5483
5TB1	5482
5TB2	5483
5TB3	5484
5TB4	5485
5TB5	5486
5TB6	5487
5TCRA	5480
5Z82B	5153A
5ZS3.3	5111A
5ZS3.3A	5111A
5ZS3.3B	5111A
5ZS3.6	5112A
5ZS3.6A	5112A
5ZS3.6B	5112A
5ZS3.9	5113A
5ZS3.9A	5113A
5ZS3.9B	5113A
5ZS4.3	5114A
5ZS4.3A	5114A
5ZS4.3B	5114A
5ZS4.7B	5115A
5ZS5.1	5116A
5ZS5.1A	5116A
5ZS5.1B	5116A
5ZS5.6	5117A
5ZS5.6A	5117A
5ZS5.6B	5117A
5ZS6.0A	5118A
5ZS6.0B	5118A

To Be Replaced	ECG Replacement
5ZS6.2	5119A
5ZS6.2A	5119A
5ZS6.2B	5119A
5ZS6.8B	5120A
5ZS7.5	5121A
5ZS7.5A	5121A
5ZS7.5B	5121A
5ZS8.2	5122A
5ZS8.2A	5122A
5ZS8.2B	5122A
5ZS8.7	5123A
5ZS8.7A	5123A
5ZS8.7B	5183A
5ZS9.1	5124A
5ZS9.1A	5124A
5ZS9.1B	5124A
5ZS10	5125A
5ZS10A	5125A
5ZS10B	5125A
5ZS11	5126A
5ZS11A	5126A
5ZS11B	5126A
5ZS12	5127A
5ZS12A	5127A
5ZS12B	5127A
5ZS13	5128A
5ZS13A	5128A
5ZS13B	5128A
5ZS14	5129A
5ZS14A	5129A
5ZS14B	5129A
5ZS15	5130A
5ZS15A	5130A
5ZS15B	5130A
5ZS16	5131A
5ZS16A	5131A
5ZS16B	5131A
5ZS17	5132A
5ZS17A	5132A
5ZS17B	5132A
5ZS18	5133A
5ZS18A	5133A
5ZS18B	5133A
5ZS19	5134A
5ZS19A	5134A
5ZS19B	5134A
5ZS20	5135A
5ZS20A	5135A
5ZS20B	5135A
5ZS22	5136A
5ZS22A	5136A
5ZS22B	5136A
5ZS24	5137A
5ZS24A	5137A
5ZS24B	5137A
5ZS25	5138A
5ZS25A	5138A
5ZS25B	5138A
5ZS27	5139A
5ZS27A	5139A
5ZS27B	5139A
5ZS28	5140A
5ZS28A	5140A
5ZS28B	5140A
5ZS30	5141A
5ZS30A	5141A
5ZS30B	5141A
5ZS33	5142A
5ZS33A	5142A
5ZS33B	5142A
5ZS36	5143A
5ZS36A	5143A
5ZS36B	5143A
5ZS39	5144A
5ZS39A	5144A
5ZS39B	5144A
5ZS43	5145A
5ZS43A	5145A
5ZS43B	5145A
5ZS47	5146A
5ZS47A	5146A
5ZS47B	5146A
5ZS51	5147A
5ZS51A	5147A
5ZS51B	5147A
5ZS56B	5148A
5ZS60	5043A
5ZS60A	5043A
5ZS60B	5149A
5ZS62B	5150A
5ZS68	5151A
5ZS68A	5151A
5ZS68B	5151A
5ZS75	5152A
5ZS75A	5152A
5ZS75B	5152A
5ZS82	5153A
5ZS82A	5153A
5ZS82B	5153A
5ZS87	5153A
5ZS87A	5153A
5ZS87B	5154A
5ZS91	5155A
5ZS91A	5155A
5ZS91B	5155A
5ZS100	5156A
5ZS100A	5156A
5ZS100B	5156A
6-0000139	128
6-0000155A	102
6-0000158	121
6-000105	102
6-000140	175
6-000555-2	175
6-0004799	5635

To Be Replaced	ECG Replacement
6-0005193	152
6-007-3	708
6-04	123A
6-04GRN	123A
6-04ORN	123A
6-04S1	123A
6-04S2	123A
6-05	123A
6-05F	123A
6-05YEL	123A
6-0451	123A
6-0452	123A
6-4	123A
6-11	123A
6-13	102A
6-19	123A
6-24	175
6-30	123A
6-31	159
6-31A	159
6-38	159
6-38A	159
6-49	234
6-50	126
6-53	102A
6-53A	102A
6-53F	102A
6-60	102A
6-60A	160
6-60B	102A
6-60C	160
6-60D	102A
6-60E	160
6-60F	160
6-60P	102A
6-60T	160
6-60X	160
6-61	102A
6-61A	160
6-61B	102A
6-61D	102A
6-61E	160
6-61F	160
6-61P	102A
6-61T	160
6-61X	160
6-62	102A
6-62A	102A
6-62B	102A
6-62C	160
6-62D	102A
6-62E	160
6-62F	126
6-62P	126
6-62X	126
6-63	102A
6-63A	102A
6-63T	102A
6-65	102A
6-65T	102A
6-66	102A
6-66T	102A
6-67	102A
6-67T	102A
6-69	160
6-69X	160
6-70	126
6-71	126
6-72	126
6-84F	160
6-85F	160
6-87	102A
6-88	102A
6-88(Automatic)	131
6-89	126
6-89X	101
6-90	123A
6-93	123A
6-137	130
6-138	234
6-138(pwr)	130
6-139	128
6-140	175
6-155	102
6-158	121
6-223-636	222
6-856	128
6-2708	123A
6-4799	5635
6-5193	152
6-5363	102A
6-5552	175
6-9029-15D	123A
6-9029-15E	123A
6-9029-20J	129
6-59010	116
6-490001	175
6-1260039	160
6-1260039A	160
6-6450036	123A
6-6490001	175
6-6490004	130
6A8-1A5L	160
6A15	5850
6A30	5850
6A50	5850
6A100	5852
6A200	5854
6A300	5856
6A400	5858
6A500	5860
6A600	5862
6A700	5866
6A800	5866
6A900	5868

To Be Replaced	ECG Replacement
6A1000	5868
6A10227	123A
6A10228	128
6A10229	131
6A10422	123A
6A10423	123A
6A10520	123A
6A10622	158
6A10624	102A
6A10851	123A
6A10855	123A
6A11180	123A
6A11223	161
6A11301	158
6A11665	102A
6A11668	102A
6A12515	158
6A12516	102A
6A12517	158
6A12677	108
6A12678	100
6A12679	108
6A12680	126
6A12681	123A
6A12682	123A
6A12683	123A
6A12684	102A
6A12685	102A
6A12725	123A
6A12788	123A
6A12789	123A
6A12889	160
6A12988	154
6A12989	102A
6A12990	102A
6A12992	103A
6A12993	103
6A16399	123A
6A7741393	941D
6B-3	121MP
6B-3-70	121MP
6B-3-70-12	121MP
6B-3A	121MP
6B-3A0	121MP
6B-3A1	121MP
6B-3A2	121MP
6B-3A3	121MP
6B-3A3P	121MP
6B-3A4	121MP
6B-3A4-7	121MP
6B-3A4-7B	121MP
6B-3A5	121MP
6B-3A5L	121MP
6B-3A6	121MP
6B-3A7	121MP
6B-3A7-1	121MP
6B-3A8	121MP
6B-3A9	121MP
6B-3A9G	121MP
6B-3A19	121MP
6B-3A21	121MP
6B-3A82	121MP
6B-3AOR	121MP
6B-30	121MP
6B-31	121MP
6B-32	121MP
6B-33	121MP
6B-34	121MP
6B-35	121MP
6B-36	121MP
6B-37	121MP
6B-38	121MP
6B-39	121MP
6C05	5850
6C05R	5851
6C10	5852
6C10R	5853
6C15	5854
6C15R	5855
6C20	5854
6C20R	5855
6C30	5856
6C30R	5857
6C40	5858
6C40R	5859
6C50	5860
6C50R	5861
6C60	5862
6C60R	5863
6C70	5866
6C70R	5867
6C80	5866
6C80R	5867
6C90	5868
6C90R	5869
6C100	5868
6C100R	5869
6CC11	5944
6D0000105	102
6D122	102A
6D122R	102A
6D122T	102A
6D122TC	102A
6D122TH	102A
6D122U	102A
6D122V	102A
6D122W	102A
6D122Y	102A
6DC11	5994
6E4850/56-0001	123A
6E4850/56-0002	128
6F5	5850
6F5A	5850
6F5B	5850
6F5-D	5850

To Be Replaced	ECG Replacement
6F10	5852
6F10A	5852
6F10B	5852
6F10-D	5852
6F15	5854
6F15A	5854
6F15B	5854
6F15-D	5854
6F20	5854
6F20A	5854
6F20B	5854
6F20-D	5854
6F30	5856
6F30A	5856
6F30B	5856
6F30-D	5856
6F40	5858
6F40A	5858
6F40B	5858
6F40-D	5858
6F50	5860
6F50A	5860
6F50B	5860
6F50-D	5860
6F60	5862
6F60A	5862
6F60B	5862
6F60-D	5862
6F70	5866
6F70A	5866
6F70B	5866
6F80	5866
6F80A	5866
6F80B	5866
6F80-D	5866
6F90	5868
6F90A	5868
6F90B	5868
6F100	5868
6F100A	5868
6F100B	5868
6F100-D	5868
6FR5	5851
6FR5A	5851
6FR5-D	5851
6FR10	5853
6FR10A	5853
6FR10B	5853
6FR10-D	5853
6FR15	5855
6FR15A	5855
6FR15B	5855
6FR20	5855
6FR20A	5855
6FR20B	5855
6FR20-D	5855
6FR30	5857
6FR30A	5857
6FR30B	5857
6FR40	5859
6FR40A	5859
6FR40B	5859
6FR40-D	5859
6FR50	5861
6FR50A	5861
6FR50B	5861
6FR58	5851
6FR60	5863
6FR60A	5863
6FR60B	5863
6FR60-D	5863
6FR70	5867
6FR70A	5867
6FR70B	5867
6FR80	5867
6FR80A	5867
6FR80B	5867
6FR80-D	5867
6FR90	5869
6FR90A	5869
6FR90B	5869
6FR100	5869
6FR100A	5869
6FR100B	5869
6G4	113
6G8	116
6GA175D	116
6GA1750	116
6GC1	113
6GC1BY1	113
6GC12	5858
6GD1	114
6GX1	115
6GX1BY1	115
6i0148-1	128
6JC12	5862
6L122	102A
6LC12	5866
6M4	116
6M404-1	116
6M404-2	116
6M404-3	116
6M404-4	116
6M404-5	116
6M404-6	116
6M404-7	116
6MC	160
6NC12	5868
6PPL5	5312
6PPL10	5312
6PPL20	5313
6PPL40	5314
6PPL60	5315
6PPL80	5316
6R522PC7BAD1	116

To Be Replaced	ECG Replacement
6RS5SP5B5	524
6RS6PH13BCJ1	119
6RS6PH13BJJ1	119
6RS6PH13BKJ1	119
6RS6PH13BLJ1	119
6RS6PH13BMJ1	119
6RS7PH30BCB1	118
6RS7PH120BFB1	118
6RS7PH130BCB1	118
6RS7PH136AB1	119
6RS18PH10BNB1	118
6RS18PH110BEB1	118
6RS18PH110BHB1	118
6RS18PH110BMB1	118
6RS20SP5B5	524
6RS21SA6D6	524
6RS36PH13BJJ1	119
6RS36PH13BJK1	119
6RS36PH13BKJ1	119
6RS36PH13BLJ1	119
6RS51GX12	120
6RS56PHL3BKJ1	119
6RW62HY	116
6S1376A01	524
6SB5	5312
6SB10	5312
6SB20	5313
6SB40	5314
6SB50	5312
6SB60	5315
6SB80	5316
6SB100	5312
6SB200	5313
6SB400	5314
6SB600	5315
6SB800	5316
6V-200	136A
6X97047A01	123A
6X97047A02	102A
6X97174A01	177
6X97174XA08	177
6.2SR1	137A
6.2SR1A	137A
6.2SR2	137A
6.2SR2A	137A
6.2SR3	137A
6.2SR3A	137A
6.2SR4	137A
6.2SR4A	137A
7-0002	116
7-0002-00	128
7-0003	166
7-0004	116
7-0005	109
7-0006	109
7-0007	5226A
7-0008	116
7-0009	5220A
7-0011-00	128
7-0012-00	129
7-0013	177
7-0014	159
7-0015	123A
7-0030-00	175
7-0051-00	128
7-0112-00	152
7-0112-03	152
7-0112-04	152
7-0112-05	152
7-0115	223
7-0115-000	223
7-0197	223
7-0197-00	223
7-1(Sarkes)	123A
7-1(Standel)	121
7-2(Sarkes)	123A
7-2(Standel)	104MP
7-3(Sarkes)	123A
7-3(Standel)	129
7-4	108
7-4(Sarkes)	123A
7-4(Standel)	129
7-5	123A
7-5(Sarkes)	123A
7-6	108
7-6(Sarkes)	123A
7-7	108
7-7(Sarkes)	123A
7-8	108
7-8(Sarkes)	123A
7-8(Standel)	168
7-9	161
7-9(Sarkes)	161
7-10	161
7-10(Sarkes)	161
7-11(Sarkes)	161
7-11(Standel)	125(4)
7-12(Standel)	130
7-13(Standel)	130
7-14A	129
7-15(Sarkes)	123A
7-15(Standel)	125(4)
7-16	107
7-16(Sarkes)	123A
7-17	123A
7-17(Sarkes)	123A
7-18(Sarkes)	123A
7-19(Sarkes)	123A
7-19(Standel)	124
7-20(Sarkes)	123A
7-21(Sarkes)	161
7-22(Sarkes)	161
7-23(Sarkes)	161
7-24(Sarkes)	161
7-25(Sarkes)	161

To Be Replaced	ECG Replacement
7-26	107
7-28(Standel)	218
7-29(Standel)	175
7-39	107
7-40	222
7-44	108
7-59-0013477	109
7-59-0053477	166
7-59-068	123A
7-59-0103477	158
7-59-0193477	108
7-59-0203477	108
7-59-0213477	108
7-59-0223477	108
7-59-0233477	108
7-59-0243477	123A
7-59-0293477	102A
7-59-0603477	102A
7-117-02	221
7-3401A	126
7-5806	5547
7-5851	5675
7-5851-02	5675
7-5851V	5675
7-5853	5651
7-5853A	5642
7-5853B	5642
7-6006-00	5801
7-25806-01	5547
7-73004-02	176
7-73004-03	176
7-73004-04	176
7-73004-1	176
7-1585122	5675
7-2580504	5494
7-2585301-01	5651
7-2585301-02	5642
7-2585303	5642
7-7340102	126
7-7466201	181
7A30	107
7A30(GE)	128
7A30(Sherwood)	123A
7A31	107
7A31(GE)	128
7A31(Sherwood)	123A
7A32	107
7A32(GE)	128
7A32(Sherwood)	128
7A35(GE)	128
7A995(GE)	128
7A995(Sherwood)	128
7A1011(GE)	128
7A1011(Sherwood)	128
7B1	124
7B2	124
7B-3B1	169
7B13	124
7C1	124
7C2	124
7C3	124
7C4011BP	4011B
7D	116
7D1	124
7D2	124
7D3	124
7D210	125
7D210A	125
7E1	124
7E2	124
7E3	124
7G1	124
7G2	124
7G3	124
7G4	124
7K705M	113
7L6-0105	175
7L6-0444-1	196 & 197
7L6-0531-1	196 & 197
7L6-0531-2	196 & 197
7L6-0592-1	196 & 197
7MA60	116
7TB1	5491
7TB2	5483
7TB3	5484
7TB4	5507
7TB5	5528
7TB6	5496
7TB8	5531
7VM705M	113
7X070	138A
7.Z17B	5076A
8-0001300	125
8-0001400	125
8-0024-1	108
8-0024-2	108
8-0024-3	123
8-0060	100
8-0062	102
8-00243	123A
8-005202	123A
8-0050100	123A
8-0050300	103A
8-0050400	160
8-0050500	160
8-0050600	103A
8-0050700	121
8-0051500	123A
8-0051600	129
8-0052102	123A
8-0052302	123A
8-0052402	130
8-0052600	123A
8-0052700	129
8-0052800	103A

To Be Replaced	ECG Replacement
8-0053001	123A
8-0053300	128
8-0053400	123A
8-0053600	108
8-0053702	130MP
8-0104900	160
8-0105200	160
8-0105300	160
8-0205400	102A
8-0205600	102A
8-0222631U	102A
8-0236400	102A
8-0236430	102A
8-0243900	102A
8-0318250	123A
8-0337390	123A
8-0338030	108
8-0338040	108
8-0339430	108
8-0339440	108
8-0383840	108
8-0383930	108
8-0383940	123A
8-0389910	123A
8-0389930	123A
8-0414120	130
8-0414130	130
8-0421980	123A
8-1	175
8-1(Bendix)	175
8-4-081	312
8-4(Bendix)	123A
8-6-007	109
8-9-089	199
8-9-177	229
8-9V	5072A
8-10-019	159
8-10-109	177
8-11-053	222
8-22	116
8-25	116
8-28-043	7493A
8-28-044	74145
8-28-045	601
8-28-048	116
8-28-187	7405
8-28-188	1244
8-28-206	123A
8-28-217	290
8-28-254	161
8-28-267	519
8-38	116
8-38-002	974
8-40-001	197
8-40-002	5070A
8-40-003	5074A
8-40-011	7490
8-40-015	7476
8-40-016	7420
8-40-021	5010A
8-40-027	316
8-40-109	177
8-40-132	229
8-619-030-007	102A
8-619-030-008	102A
8-619-030-009	102A
8-619-030-011	109
8-619-030-012	116
8-619-030-014	102A
8-619-030-015	131
8-619-030-016	102A
8-619-030-017	102A
8-639-001-095	116
8-697-020-567	102A
8-697-020-568	102A
8-697-020-569	102A
8-697-020-570	123A
8-697-020-571	109
8-710-222-21	116
8-719-122-00	605
8-719-200-02	116
8-719-205-10	116
8-719-713-93	612
8-719-815-55	177
8-721-323-00	158
8-722-923-00	107
8-723-650	103
8-724-034-00	107
8-724-733-30	123A
8-726-357-10	123A
8-726-377-31	123A
8-727-788-00	159
8-729-447-53	158
8-729-468-43	294
8-729-663-47	123A
8-729-803-04	229
8-750-105-11	1096
8-759-101-60	1045
8-759-424-00	712
8-759-425-00	712
8-759-425-00	712
8-759-651-34	1096
8-759-812-01	1003
8-760-343-10	124
8-769-335-10	293
8-902-0706-071	123A
8-905-013-752	116
8-905-013-759	116
8-905-013-760	116
8-905-014-008	118
8-905-014-017	123A
8-905-198-001	116
8-905-198-004	116
8-905-198-005	116
8-905-198-007	116

To Be Replaced	ECG Replacement
8-905-198-008	116
8-905-198-010	116
8-905-198-034	116
8-905-305-004	110MP
8-905-305-007	109
8-905-305-020	109
8-905-305-023	110MP
8-905-305-055	109
8-905-305-318	109
8-905-305-327	109
8-905-305-330	109
8-905-305-336	109
8-905-305-338	109
8-905-305-339	109
8-905-305-342	109
8-905-305-348	109
8-905-305-400	116
8-905-305-405	109
8-905-305-555	109
8-905-305-561	109
8-905-305-580	109
8-905-305-635	109
8-905-313-007	110MP
8-905-313-008	110MP
8-905-313-010	109
8-905-313-011	109
8-905-313-017	109
8-905-313-018	110MP
8-905-313-100	109
8-905-313-101	109
8-905-313-120	109
8-905-405-002	116
8-905-405-026	116
8-905-405-069	116
8-905-405-077	109
8-905-405-098	177
8-905-405-105	125
8-905-405-134	116
8-905-405-146	116
8-905-405-160	125
8-905-405-170	125
8-905-405-206	116
8-905-405-819	116
8-905-405-822	519
8-905-405-838	109
8-905-406-020	177
8-905-413-092	116
8-905-421-109	136A
8-905-421-118	139A
8-905-421-128	145A
8-905-421-215	5069A
8-905-421-228	139A
8-905-421-234	142A
8-905-421-239	145A
8-905-421-277	139A
8-905-421-300	177
8-905-421-315	150A
8-905-421-319	142A
8-905-421-715	145A
8-905-421-1851	177
8-905-605-016	102A
8-905-605-030	102A
8-905-605-032	102A
8-905-605-050	102A
8-905-605-051	102A
8-905-605-075	102A
8-905-605-090	102A
8-905-605-091	102A
8-905-605-105	103A
8-905-605-108	103A
8-905-605-109	103A
8-905-605-110	103A
8-905-605-111	103A
8-905-605-112	103A
8-905-605-113	103A
8-905-605-120	158
8-905-605-123	158
8-905-605-124	158
8-905-605-125	158
8-905-605-126	158
8-905-605-127	158
8-905-605-128	158
8-905-605-129	158
8-905-605-230	102A
8-905-605-232	102A
8-905-605-234	102A
8-905-605-250	158
8-905-605-255	158
8-905-605-260	158
8-905-605-264	158
8-905-605-266	158
8-905-605-268	158
8-905-605-269	158
8-905-605-292	102A
8-905-605-305	102A
8-905-605-320	160
8-905-605-365	103A
8-905-605-384	103A
8-905-605-390	103A
8-905-605-607	131
8-905-605-624	121
8-905-605-635	121
8-905-605-636	121
8-905-605-637	121
8-905-605-644	161
8-905-605-650	131
8-905-605-775	127
8-905-605-908	127
8-905-606-001	160
8-905-606-003	160
8-905-606-007	160
8-905-606-008	160
8-905-606-010	160
8-905-606-016	160
8-905-606-051	160

To Be Replaced	ECG Replacement
8-905-606-075	160
8-905-606-077	160
8-905-606-090	160
8-905-606-105	160
8-905-606-106	160
8-905-606-120	160
8-905-606-142	160
8-905-606-152	160
8-905-606-153	160
8-905-606-154	160
8-905-606-155	160
8-905-606-158	160
8-905-606-165	160
8-905-606-168	160
8-905-606-180	160
8-905-606-211	160
8-905-606-225	160
8-905-606-241	160
8-905-606-255	160
8-905-606-256	160
8-905-606-349	160
8-905-606-350	160
8-905-606-351	160
8-905-606-352	160
8-905-606-360	160
8-905-606-375	160
8-905-606-390	160
8-905-606-391	160
8-905-606-392	160
8-905-606-405	160
8-905-606-419	160
8-905-606-420	160
8-905-606-423	160
8-905-606-720	121
8-905-606-750	102A
8-905-606-800	102A
8-905-606-815	102A
8-905-606-817	102A
8-905-606-885	102A
8-905-613-010	102A
8-905-613-015	103A
8-905-613-062	103A
8-905-613-070	158
8-905-613-071	158
8-905-613-131	158
8-905-613-132	158
8-905-613-133	158
8-905-613-150	103&158
8-905-613-160	158
8-905-613-210	121
8-905-613-215	121
8-905-613-232	127
8-905-613-240	131
8-905-613-241	131
8-905-613-242	131
8-905-613-245	131
8-905-613-250	121
8-905-613-265	131
8-905-613-266	131
8-905-613-277	131
8-905-613-282	131
8-905-613-283	131
8-905-613-284	131
8-905-613-295	127
8-905-613-555	131
8-905-613-640	102A
8-905-613-710	102A
8-905-613-955	102A
8-905-615-156	102A
8-905-705-112	123A
8-905-705-403	123A
8-905-705-405	123A
8-905-705-410	128
8-905-706-010	171
8-905-706-044	161
8-905-706-055	161
8-905-706-060	161
8-905-706-067	171
8-905-706-068	171
8-905-706-070	161
8-905-706-071	161
8-905-706-075	161
8-905-706-076	107
8-905-706-077	107
8-905-706-080	161
8-905-706-101	161
8-905-706-104	123A
8-905-706-110	161
8-905-706-137	159
8-905-706-165	106
8-905-706-201	123A
8-905-706-202	123A
8-905-706-203	123A
8-905-706-206	123A
8-905-706-208	123A
8-905-706-211	123A
8-905-706-215	123A
8-905-706-235	123A
8-905-706-236	123A
8-905-706-238	123A
8-905-706-239	123A
8-905-706-240	123A
8-905-706-242	123A
8-905-706-244	123A
8-905-706-245	123A
8-905-706-246	123A
8-905-706-247	159
8-905-706-250	123A
8-905-706-251	159
8-905-706-253	159
8-905-706-254	159
8-905-706-255	159
8-905-706-256	159
8-905-706-257	123A
8-905-706-260	123A

To Be Replaced	ECG Replacement
8-905-706-263	123A
8-905-706-280	159
8-905-706-286	159
8-905-706-287	159
8-905-706-288	159
8-905-706-289	159
8-905-706-290	159
8-905-706-336	123A
8-905-706-545	129
8-905-706-555	130
8-905-706-556	130
8-905-706-557	130
8-905-706-606	123A
8-905-706-730	161
8-905-706-790	160
8-905-706-801	184
8-905-706-894	222
8-905-706-901	133
8-905-707-254	123A
8-905-707-265	123A
8-905-707-313	123A
8-905-707-314	199
8-905-707-317B	199
8-905-707-327	159
8-905-707-338	298
8-905-707-416	199
8-905-713-058	159
8-905-713-101	130
8-905-713-110	184
8-905-713-124	152 & 153
8-905-713-556	130
8-905-713-810	129
8-905-955-029	801
8-906-706-112	161
8-1074	152
8-1075	223
8-2409501	123A
8-2410300	129
8-81250108	199
8-81250109	123A
8A01	109
8A1002	172A
8A1003	172A
8A10521	131
8A10625	131
8A11083	131
8A11667	116
8A11721	131
8A12359	131
8A12789	123A
8A12991	104
8A13164	131
8A13718	158
8AN10	5994
8AN20	5994
8AN30	5878
8AN40	5900
8AN100	5910
8C91	139A
8C145-01	218
8C200	159
8C201	159
8C202	159
8C203	159
8C204	159
8C205	159
8C206	159
8C207	159
8C430	159
8C430K	159
8C440	159
8C440K	159
8C443	159
8C443K	159
8C445	159
8C445K	159
8C449	159
8C449K	159
8C450	159
8C460	159
8C460K	159
8C463	159
8C463K	159
8C465	159
8C465K	159
8C466	159
8C466K	159
8C467	159
8C467K	159
8C468	159
8C468K	159
8C469	159
8C469K	159
8C470	159
8C470K	159
8C700	159
8C700A	159
8C700B	159
8C702	159
8C702A	159
8C702B	159
8C704	159
8C740	159
8C740G	159
8C740M	159
8C742	159
8C742G	159
8C742M	159
8C7400	159
8C7420	159
8CG15	116
8CG15RE	116
8D	160
8D4	116
8D6	116

To Be Replaced	ECG Replacement
8D8	125
8D10	125
8E	160
8E(Automatic)	126
8F	160
8F(Automatic)	126
8G7	125
8GA	125
8H303	121
8L	160
8L201	121
8L201B	121
8L201C	121
8L201R	121
8L201V	121
8L301V	104
8L404	121
8M-26102	358
8P	160
8P-2	102A
8P-2-70	102A
8P-2-70-12	102A
8P-2-70-12-7	102A
8P-2A	102A
8P-2A0	102A
8P-2A0R	102A
8P-2A1	102A
8P-2A2	102A
8P-2A3	102A
8P-2A3P	102A
8P-2A4	102A
8P-2A4-7	102A
8P-2A4-7B	102A
8P-2A5	102A
8P-2A5L	102A
8P-2A6	102A
8P-2A6-2	102A
8P-2A7	102A
8P-2A7-1	102A
8P-2A8	102A
8P-2A9	102A
8P-2A9G	102A
8P-2A19	102A
8P-2A21	102A
8P-2A82	102A
8P-20	102A
8P-21	102A
8P-22	102A
8P-23	102A
8P-24	102A
8P-25	102A
8P-26	102A
8P-27	102A
8P-28	102A
8P-29	102A
8P40	104
8P50S	131
8P73BLU	152
8P73GRN	152
8P73YEL	152
8P111	133
8P202	131
8P345	152
8P404	104
8P404B	121
8P404F	104
8P404M	121
8P404N	121
8P404ORN	104
8P404R	121
8P404T	131
8P404V	121
8P415C	121
8P416C	121
8P445	153
8P505	131
8P880	105
8P880B	105
8P1555	179
8P9253	151A
8PC60	121
8PS60	121
8Q-000003-11	234
8Q-3-04	103A
8Q-3-10	199
8Q-3-11	159
8Q-3-13	128
8Q-3-14	159
8Q-3-23	155
8RCM5	5501
8RCM20	5504
8RCV5	5501
8RCV20	5504
9-003	107
9-006	123A
9-5108	160
9-5110	160
9-5111	160
9-5112	101
9-5113	101
9-5114	101
9-5116	160
9-5117	160
9-5118	160
9-5119	160
9-5120	160
9-5120A	100
9-5121	160
9-5122	160
9-5123	160
9-5124	160
9-5125	108
9-5126	108
9-5127	108
9-5128	108

To Be Replaced	ECG Replacement
9-5129	108
9-5130	108
9-5131	108
9-5201	102A
9-5202	103A
9-5203	102A
9-5204	102A
9-5208	102A
9-5209	102A
9-5212	102A
9-5213	102A
9-5214	102A
9-5216	123A
9-5217	102A
9-5218	102A
9-5220	128
9-5221	123A
9-5222-1	102A
9-5222-2	103A
9-5223	108
9-5224-1	102A
9-5224-2	103A
9-5225	123A
9-5226-003	129
9-5226-004	128
9-5226-1	129
9-5226-2	123A
9-5226-3	129
9-5226-4	128
9-5227	123A
9-5250	121
9-5250-1	121MP
9-5251	121
9-5252	124
9-5252-1	124
9-5252-2	124
9-5252-3	124
9-5252-4	124
9-5257	121MP
9-5296	123A
9-9101	126
9-9102	126
9-9103	126
9-9104	102A
9-9105	160
9-9106	160
9-9107	160
9-9108	160
9-9109-1	123A
9-9109-2	123A
9-9120	160
9-9121	160
9-9201	102A
9-9202	102A
9-9203	102A
9-511141400	121
9-511410100	102A
9-511410200	102A
9-511410900	102A
9-511413500	102A
9-511511500	125
9A1	358
9A8-1A64	160
9D11	177
9D12	109
9D13	116
9D14	177
9D15	139A
9D16	109
9D141003-12	139A
9DI	177
9DI2	109
9DI3	177
9DT1100310	109
9GR2	123A
9H00DC	74H00
9H00PC	74H00
9H01DC	74H01
9H01PC	74H01
9H04DC	74H04
9H04PC	74H04
9H05DC	74H05
9H05PC	74H05
9H08DC	74H08
9H08PC	74H08
9H10DC	74H10
9H10PC	74H10
9H11DC	74H11
9H11PC	74H11
9H20DC	74H20
9H20PC	74H20
9H21DC	74H21
9H21PC	74H21
9H22	74H22
9H22DC	74H22
9H22PC	74H22
9H30DC	74H30
9H30PC	74H30
9H40DC	74H40
9H40PC	74H40
9H50DC	74H50
9H50PC	74H50
9H51DC	74H51
9H51PC	74H51
9H52DC	74H52
9H52PC	74H52
9H53DC	74H53
9H53PC	74H53
9H54DC	74H54
9H54PC	74H54
9H55DC	74H55
9H55PC	74H55
9H60DC	74H60
9H60PC	74H60
9H61DC	74H61

To Be Replaced	ECG Replacement
9H61PC	74H61
9H62DC	74H62
9H62PC	74H62
9H71DC	74H71
9H71PC	74H71
9H72DC	74H72
9H72PC	74H72
9H73DC	74H73
9H73PC	74H73
9H74DC	74H74
9H74PC	74H74
9H76DC	74H76
9H76PC	74H76
9H78DC	74H78
9H78PC	74H78
9H101DC	74H101
9H101PC	74H101
9H102DC	74H102
9H102PC	74H102
9H103DC	74H103
9H103PC	74H103
9H106DC	74H106
9H106PC	74H106
9H108DC	74H108
9H108PC	74H108
9L-4	102A
9L-4-70	102A
9L-4-70-12	102A
9L-4-70-12-7	102A
9L-4A	102A
9L-4A0	102A
9L-4A0R	102A
9L-4A1	102A
9L-4A2	102A
9L-4A3	102A
9L-4A3P	102A
9L-4A4	102A
9L-4A4-7	102A
9L-4A4-7B	102A
9L-4A5	102A
9L-4A5L	102A
9L-4A6	102A
9L-4A6-1	102A
9L-4A7	102A
9L-4A7-1	102A
9L-4A8	102A
9L-4A9	102A
9L-4A9G	102A
9L-4A19	102A
9L-4A21	102A
9L-4A82	102A
9L-40	102A
9L-41	102A
9L-42	102A
9L-43	102A
9L-44	102A
9L-45	102A
9L-46	102A
9L-47	102A
9L-48	102A
9L-49	102A
9LR2	113
9LR2-1	113
9LR2-2	114
9LR2-3	113
9LR2-4	115
9LR2-24	113
9LR2-S	113
9LR2-S1	113
9LR21	113
9LS00	74LS00
9LS00CDC	74LS00
9LS00PC	74LS00
9LS02	74LS02
9LS02PC	74LS02
9LS03	74LS03
9LS03CDC	74LS03
9LS03PC	74LS03
9LS04	74LS04
9LS04CDC	74LS04
9LS04PC	74LS04
9LS05	74LS05
9LS05CDC	74LS05
9LS05PC	74LS05
9LS08	74LS08
9LS08CDC	74LS08
9LS08PC	74LS08
9LS10	74LS10
9LS10CDC	74LS10
9LS10PC	74LS10
9LS11	74LS11
9LS11CDC	74LS11
9LS11PC	74LS11
9LS14	74LS14
9LS14CDC	74LS14
9LS14PC	74LS14
9LS20	74LS20
9LS20CDC	74LS20
9LS20PC	74LS20
9LS27	74LS27
9LS27CDC	74LS27
9LS27PC	74LS27
9LS30	74LS30
9LS30CDC	74LS30
9LS30PC	74LS30
9LS32	74LS32
9LS32CDC	74LS32
9LS32PC	74LS32
9LS38	74LS38
9LS38CDC	74LS38
9LS38PC	74LS38
9LS42	74LS42
9LS42CDD	74LS42
9LS42PC	74LS42

To Be Replaced	ECG Replacement
9LS51	74LS51
9LS51CDC	74LS51
9LS51PC	74LS51
9LS73	74LS73
9LS73CDC	74LS73
9LS73PC	74LS73
9LS74	74LS74A
9LS74CDC	74LS74A
9LS74PC	74LS74A
9LS75	74LS75
9LS75CDC	74LS75
9LS75PC	74LS75
9LS83	74LS83A
9LS83A	74LS83A
9LS83ACDD	74LS83A
9LS83PC	74LS83A
9LS85	74LS85
9LS85CDD	74LS85
9LS86	74LS86
9LS86CDC	74LS86
9LS86PC	74LS86
9LS93	74LS93
9LS93CDC	74LS93
9LS93PC	74LS93
9LS107	74LS107
9LS107CDC	74LS107
9LS109	74LS109A
9LS109CDD	74LS109A
9LS109PC	74LS109A
9LS136	74LS136
9LS136CDC	74LS136
9LS136PC	74LS136
9LS138	74LS138
9LS138CDD	74LS138
9LS138PC	74LS138
9LS151	74LS151
9LS151CDD	74LS151
9LS151PC	74LS151
9LS153	74LS153
9LS153CDD	74LS153
9LS153PC	74LS153
9LS157	74LS157
9LS157CDD	74LS157
9LS157PC	74LS157
9LS161	74LS161A
9LS161CDD	74LS161A
9LS161PC	74LS161A
9LS163	74LS163A
9LS163CDD	74LS163A
9LS163PC	74LS163A
9LS164	74LS164
9LS164CDC	74LS164
9LS164PC	74LS164
9LS174	74LS174
9LS174CDD	74LS174
9LS174PC	74LS174
9LS175	74LS175
9LS175CDD	74LS175
9LS175PC	74LS175
9LS191	74LS191
9LS191CDD	74LS191
9LS191PC	74LS191
9LS193	74LS193
9LS193CDD	74LS193
9LS193PC	74LS193
9LS195	74LS195A
9LS195A	74LS195A
9LS195ACDD	74LS195A
9LS195PC	74LS195A
9LS253	74LS253
9LS253CDD	74LS253
9LS253PC	74LS253
9LS257	74LS257
9LS257CDD	74LS257
9LS257PC	74LS257
9LS266	74LS266
9LS266CDC	74LS266
9LS266PC	74LS266
9LS298	74LS298
9LS298CDD	74LS298
9LS298PC	74LS298
9N00	7400
9N00DC	7400
9N00PC	7400
9N01DC	7401
9N01PC	7401
9N02DC	7402
9N02PC	7402
9N03DC	7403
9N03PC	7403
9N04DC	7404
9N04PC	7404
9N05DC	7405
9N05PC	7405
9N06DC	7406
9N06PC	7406
9N07DC	7407
9N07PC	7407
9N08DC	7408
9N08PC	7408
9N09DC	7409
9N09PC	7409
9N10DC	7410
9N10PC	7410
9N11DC	7411
9N11PC	7411
9N12DC	7412
9N12PC	7412
9N13DC	7413
9N13PC	7413
9N14DC	7414
9N14PC	7414
9N16DC	7416
9N16PC	7416
9N17DC	7417

To Be Replaced	ECG Replacement
9N17PC	7417
9N20/7420	7420
9N20DC	7420
9N20PC	7420
9N21DC	7421
9N21PC	7421
9N23DC	7423
9N23PC	7423
9N25DC	7425
9N25PC	7425
9N26DC	7426
9N26PC	7426
9N27DC	7427
9N27PC	7427
9N30DC	7430
9N30PC	7430
9N32DC	7432
9N32PC	7432
9N37DC	7437
9N37PC	7437
9N38DC	7438
9N39DC	7439
9N39PC	7439
9N40DC	7440
9N40PC	7440
9N50DC	7450
9N50PC	7450
9N51DC	7451
9N51PC	7451
9N53DC	7453
9N53PC	7453
9N54DC	7454
9N54PC	7454
9N60DC	7460
9N60PC	7460
9N70DC	7470
9N70PC	7470
9N72DC	7472
9N72PC	7472
9N73DC	7473
9N73PC	7473
9N74	7474
9N74DC	7474
9N74PC	7474
9N76DC	7476
9N76PC	7476
9N86DC	7486
9N86PC	7486
9N107DC	74107
9N107PC	74107
9N122DC	74122
9N122PC	74122
9N123DC	74123
9N123PC	74123
9N132DC	74132
9N132PC	74132
9RE1	116
9S00DC	74S00
9S00PC	74S00
9S03DC	74S03
9S03PC	74S03
9S04DC	74S04
9S04PC	74S04
9S05DC	74S05
9S05PC	74S05
9S011	102A
9S037	123A
9S10DC	74S10
9S10PC	74S10
9S11DC	74S11
9S11PC	74S11
9S15DC	74S15
9S15PC	74S15
9S20DC	74S20
9S20PC	74S20
9S22DC	74S22
9S22PC	74S22
9S40DC	74S40
9S40PC	74S40
9S64DC	74S64
9S64PC	74S64
9S65DC	74S65
9S65PC	74S65
9S74DC	74S74
9S74PC	74S74
9S112DC	74S112
9S112PC	74S112
9S113DC	74S113
9S113PC	74S113
9S114DC	74S114
9S114PC	74S114
9S133DC	74S133
9S133PC	74S133
9S134DC	74S134
9S134PC	74S134
9S140DC	74S140
9S140PC	74S140
9TR1	107
9TR2	123A
9TR3	199
9TR4	195A
9TR5	237
9TR6	195A
9TR7	123A
9TR8	152
9TR9	289
9TR10	123A
9TR11	195A
9TR11001-01	107
9TR21001-02	123A
9TR31001-03	123A
9TR61001-07	128
9TR91001-09	130
9TRZ1001-02	123A
10-001	1254

To Be Replaced	ECG Replacement
10-002	229
10-003	199
10-004	312
10-005	132
10-006	295
10-007	235
10-008	289
10-009	186A
10-010	177
10-011	519
10-012	116
10-013	139A
10-014	229
10-015	614
10-016	136A
10-017	138A
10-018	139A
10-080009	108
10-080010	123A
10-085001	109
10-085004	110MP
10-085005	177
10-085006	116
10-085009	116
10-085010	116
10-085025	109
10-085026	116
10-085027	135A
10-1(RECT)	116
10-1(TRANSISTOR)	161
10-2	161
10-2SA49	126
10-2SB54	102A
10-2SB56	102A
10-2SC80	108
10-2SC94	108
10-2SC380	107
10-7	116
10-12	116
10-13-002-003	130
10-13-002-004	130
10-13-002-3	130
10-13-002-4	130
10-13i59-002	175
10-26-123-313	152
10-42	116
10-3159-002	175
10-10112	177
10-13002-003	130
10-13002-004	130
10-13030-004	181
10-13030-005	181
10-13159-002	175
10-47674-01	722
10-102005	125
10-374101	130
10A	160
10A590B	116
10AG2	116
10AG4	116
10AG6	116
10AG8	125
10AG10	125
10AL2	116
10AL6	116
10AS	116
10AT2	116
10AT4	116
10AT6	116
10AT8	125
10AT10	125
10B	160
10B1	116
10B-2	116
10B2	116
10B2-B1W	166
10B-2-N1W	116(2)
10B3	116
10B-4	120
10B4	116
10B-4-C4	120
10B5	116
10B6	116
10B8	125
10B10	125
10B62	140A
10B551	108
10B553	108
10B555	108
10B556	108
10B1051	108
10B1055	108
10B-Y	116
10C	116
10C05	116
10C1	116
10C2	116
10C3	116
10C4	116
10C4D	116
10C5	116
10C6	116
10C8	125
10C10	125
10C573	108
10C574	108
10D	116
10D-02	116
10D-05	116
10D05	116
10D-05	116
10D-06	116
10D08	5072A
10D1	116
10D-1	116

To Be Replaced	ECG Replacement
10-D1	116
10D1	116
10D-1	116
10D1	116
10D-1	116
10D2	116
10D-2	506
10D-2B	116
10D-2B-4	506
10D-2B(-4)	116
10D2(Crown)	506
10D-2(Crown)	506
10D2(Damper)	506
10D2L	116
10D3	116
10D3G	116
10D4	116
10D-4	116
10D4C	116
10D4D	116
10D4E	116
10D4L	116
10D5	116
10D5A	506
10D5C	116
10D5D	506
10D5E	116
10D5F	116
10D6	116
10D-6	116
10D6B	116
10D6D	116
10D6E	116
10D6F	116
10D6K	116
10D7	125
10D7E	125
10D7F	125
10D-7K	125
10D8	125
10D-8E	125
10D10	125
10D-V	116
10DB	116(4)
10DB05P	5304
10DB1	166
10DB1P	5304
10DB2A	167
10DB2P	5304
10DB4A	168
10DB4P	5304
10DB6A	168
10DB6A-C	168
10DB6P	5305
10DB8P	5306
10DBF	116
10DC	116
10DC05	116(2)
10DC05N	113
10DC05R	116
10DC05R(Boost)	115
10DC05(Red)	116
10DC-1	116(2)
10DC1	116
10DC1 Black	116
10DC-1N	113
10DC1R	116
10DC-1R	116
10DC1 Red	116
10DC-1(SANYO)	135A
10DC-2	156(2)
10DC-2B	116(2)
10DC-2C	116
10DC-2F	116(2)
10DC2F	116
10DC-2J	116
10DC-4	116
10DC4	116
10DC4R	116
10DC8	125
10DCIN	116(2)
10DCIR	116
10DCO.5	116(2)
10DCO5R	116
10DCOB	116
10DCOH	116
10DCTR	116
10DG	116
10DO.5	116
10DRV	116
10DV	116
10DX2	116
10DZ	116
10E1	116
10E-1	116
10E1LF	116
10E2	116
10E-2	116
10E2	116
10E-4D	116
10E4L	116
10E6	116
10EB1	140A
10EI	116
10F5	5852
10G4	125
10G1051	108
10G1052	108
10GA	125
10H	116
10H3	5874
10H3P	5852
10H3PN	5853
10H551	108
10H553	108

To Be Replaced	ECG Replacement
10H1051	108
10H1053	108
10I10	125
10-i3002-004	130
10J2	116
10J2F	116
10J3P	5872
10JH3	6050
10K	116
10K-1	116
10K80	505
10L15	525
10M	116
10M3.9AZ5	5174A
10M4.3AZ5	5175A
10M4.7AZ5	5176A
10M5.1AZ5	5177A
10M5.6AZ5	5178A
10M6.2AZ5	5180A
10M6.8AZ5	5181A
10M6.8Z5	5181A
10M7.5AZ5	5182A
10M7.5Z5	5182A
10M8.2Z5	5183A
10M9.1Z5	5185A
10M10	5982
10M10Z5	5186A
10M11Z5	5187A
10M12Z5	5188A
10M13Z5	5189A
10M14Z5	5190A
10M15Z5	5191A
10M16Z5	5192A
10M17Z	5193A
10M17Z5	5193A
10M17Z10	5193A
10M18Z5	5194A
10M19Z5	5195A
10M20	5986
10M20T5	5196A
10M22Z5	5197A
10M24Z5	5198A
10M25Z	5199A
10M25Z5	5199A
10M25Z10	5199A
10M30	5988
10M30Z5	5202A
10M33Z5	5203A
10M36Z5	5204A
10M39Z5	5205A
10M40	5990
10M43Z5	5206A
10M47Z5	5208A
10M50	5992
10M50Z5	5209A
10M51Z5	5210A
10M56Z5	5212A
10M60	5994
10M62Z5	5214A
10M68Z5	5215A
10M75Z5	5216A
10M80	5998
10M82Z5	5217A
10M91Z5	5219A
10M100	6002
10M100Z5	5220A
10M105Z5	5221A
10M110Z5	5222A
10M120Z5	5223A
10M130Z5	5224A
10M140Z5	5225A
10M150Z5	5226A
10M160Z5	5227A
10M275	5200A
10MZ200Z5	5232A
10N1	116
10N2	5874
10N3	5874
10P1	159
10P1A	159
10P1S	5522
10P2	5874
10P2S	5524
10P3	5874
10P3S	5526
10P4S	5527
10P5S	5528
10P6S	5529
10P8S	5531
10PZ6.8	5181A
10PZ6.8A	5181A
10PZ6.8B	5181A
10PZ6.8C	5181A
10PZ6.8D	5181A
10PZ7.5	5182A
10PZ7.5A	5182A
10PZ7.5B	5182A
10PZ7.5C	5182A
10PZ7.5D	5182A
10PZ8.2	5183A
10PZ8.2A	5183A
10PZ8.2B	5183A
10PZ8.2C	5183A
10PZ8.2D	5183A
10PZ9.1	5185A
10PZ9.1A	5185A
10PZ9.1B	5185A
10PZ9.1C	5185A
10PZ9.1D	5185A
10PZ10	5186A
10PZ10A	5186A
10PZ10B	5186A
10PZ10C	5186A
10PZ10D	5186A
10PZ11	5187A

To Be Replaced	ECG Replacement
10PZ11A	5187A
10PZ11B	5187A
10PZ11C	5187A
10PZ11D	5187A
10PZ12	5188A
10PZ12A	5188A
10PZ12B	5188A
10PZ12C	5188A
10PZ12D	5188A
10PZ13	5189A
10PZ13A	5189A
10PZ13B	5189A
10PZ13C	5189A
10PZ13D	5189A
10PZ14	5190A
10PZ14A	5190A
10PZ14B	5190A
10PZ14C	5190A
10PZ14D	5190A
10PZ15	5191A
10PZ15A	5191A
10PZ15B	5191A
10PZ15C	5191A
10PZ15D	5191A
10PZ16	5192A
10PZ16A	5192A
10PZ16B	5192A
10PZ16C	5192A
10PZ16D	5192A
10PZ18	5194A
10PZ18A	5194A
10PZ18B	5194A
10PZ18C	5194A
10PZ18D	5194A
10PZ20	5196A
10PZ20A	5196A
10PZ20B	5196A
10PZ20C	5196A
10PZ20D	5196A
10PZ22	5197A
10PZ22A	5197A
10PZ22B	5197A
10PZ22C	5197A
10PZ22D	5197A
10PZ24	5198A
10PZ24A	5198A
10PZ24B	5198A
10PZ24C	5198A
10PZ24D	5198A
10PZ27	5200A
10PZ27A	5200A
10PZ27B	5200A
10PZ27C	5200A
10PZ27D	5200A
10PZ30	5202A
10PZ30A	5202A
10PZ30B	5202A
10PZ30C	5202A
10PZ30D	5202A
10PZ33	5203A
10PZ33A	5203A
10PZ33B	5203A
10PZ33C	5203A
10PZ33D	5203A
10PZ36	5204A
10PZ36A	5204A
10PZ36B	5204A
10PZ36C	5204A
10PZ36D	5204A
10PZ39	5205A
10PZ39A	5205A
10PZ39B	5205A
10PZ39C	5205A
10PZ39D	5205A
10PZ43	5206A
10PZ43A	5206A
10PZ43B	5206A
10PZ43C	5206A
10PZ43D	5206A
10PZ47	5208A
10PZ47A	5208A
10PZ47B	5208A
10PZ47C	5208A
10PZ47D	5208A
10PZ51	5210A
10PZ51A	5210A
10PZ51B	5210A
10PZ51C	5210A
10PZ51D	5210A
10PZ56	5212A
10PZ56A	5212A
10PZ56B	5212A
10PZ56C	5212A
10PZ56D	5212A
10PZ68	5215A
10PZ68A	5215A
10PZ68B	5215A
10PZ68C	5215A
10PZ68D	5215A
10PZ75	5216A
10PZ75A	5216A
10PZ75B	5216A
10PZ75C	5216A
10PZ75D	5217A
10PZ82	5217A
10PZ82A	5217A
10PZ82B	5217A
10PZ82C	5217A
10PZ82D	5217A
10PZ91	5219A
10PZ91A	5219A
10PZ91B	5219A
10PZ91C	5219A
10PZ91D	5219A
10PZ100	5220A

To Be Replaced	ECG Replacement
10PZ100A	5220A
10PZ100B	5220A
10PZ100C	5220A
10PZ100D	5220A
10PZ110	5222A
10PZ110A	5222A
10PZ110B	5222A
10PZ110C	5222A
10PZ110D	5222A
10PZ120	5223A
10PZ120A	5223A
10PZ120B	5223A
10PZ120C	5223A
10PZ120D	5223A
10PZ130	5224A
10PZ130A	5224A
10PZ130B	5224A
10PZ130C	5224A
10PZ130D	5224A
10PZ150	5226A
10PZ150A	5226A
10PZ150B	5226A
10PZ150C	5226A
10PZ150D	5226A
10PZ160	5227A
10PZ160A	5227A
10PZ160B	5227A
10PZ160C	5227A
10PZ160D	5227A
10PZ180	5230A
10PZ180A	5230A
10PZ180B	5230A
10PZ180C	5230A
10PZ180D	5230A
10PZ200	5232A
10PZ200A	5232A
10PZ200B	5232A
10PZ200C	5232A
10PZ200D	5232A
10PZ977C	7489
10Q3	5942
10R1B	116
10R2	5913
10R2B	116
10R3B	116
10R4B	116
10R5B	116
10R6B	116
10R7B	125
10R8B	125
10R9B	125
10R10B	125
10R11B	506
10R12B	506
10R13B	506
10R14B	506
10R15B	525
10RC2	5520
10RC2A	5520
10RC5	5521
10RC5A	5521
10RC10	5522
10RC10A	5522
10RC15	5523
10RC15A	5523
10RC20	5524
10RC20A	5524
10RC25	5525
10RC25A	5544
10RC30	5526
10RC30A	5526
10RC40	5527
10RC40A	5527
10RC50	5528
10RC50A	5528
10RC60	5529
10RC60A	5529
10RC70	5530
10RC70A	5530
10RC80	5531
10RC80A	5531
10RZ6.8	5181A
10RZ6.8A	5181A
10RZ6.8B	5181A
10RZ6.8C	5181A
10RZ6.8D	5181A
10RZ7.5	5182A
10RZ7.5A	5182A
10RZ7.5B	5182A
10RZ7.5C	5182A
10RZ7.5D	5182A
10RZ8.2	5183A
10RZ8.2A	5183A
10RZ8.2B	5183A
10RZ8.2C	5183A
10RZ8.2D	5183A
10RZ9.1	5185A
10RZ9.1A	5185A
10RZ9.1B	5185A
10RZ9.1C	5185A
10RZ9.1D	5185A
10RZ10	5186A
10RZ10A	5186A
10RZ10B	5186A
10RZ10C	5186A
10RZ10D	5186A
10RZ11	5187A
10RZ11A	5187A
10RZ11B	5187A
10RZ11C	5187A
10RZ11D	5187A
10RZ12	5188A
10RZ12A	5188A
10RZ12B	5188A
10RZ12C	5188A
10RZ12D	5188A

To Be Replaced	ECG Replacement
10RZ13	5189A
10RZ13A	5189A
10RZ13B	5189A
10RZ13C	5189A
10RZ13D	5189A
10RZ15	5191A
10RZ15A	5191A
10RZ15B	5191A
10RZ15C	5191A
10RZ15D	5191A
10RZ16	5192A
10RZ16A	5192A
10RZ16B	5192A
10RZ16C	5192A
10RZ16D	5192A
10RZ18	5194A
10RZ18A	5194A
10RZ18B	5194A
10RZ18C	5194A
10RZ18D	5194A
10RZ20	5196A
10RZ20A	5196A
10RZ20B	5196A
10RZ20C	5196A
10RZ20D	5196A
10RZ22	5197A
10RZ22A	5197A
10RZ22B	5197A
10RZ22C	5197A
10RZ22D	5197A
10RZ24	5198A
10RZ24A	5198A
10RZ24B	5198A
10RZ24C	5198A
10RZ24D	5198A
10RZ27	5200A
10RZ27A	5200A
10RZ27B	5200A
10RZ27C	5200A
10RZ27D	5200A
10RZ30	5202A
10RZ30A	5202A
10RZ30B	5202A
10RZ30C	5202A
10RZ30D	5202A
10RZ33	5203A
10RZ33A	5203A
10RZ33B	5203A
10RZ33C	5203A
10RZ33D	5203A
10RZ36	5204A
10RZ36A	5204A
10RZ36B	5204A
10RZ36C	5204A
10RZ36D	5204A
10RZ39	5205A
10RZ39A	5205A
10RZ39B	5205A
10RZ39C	5205A
10RZ39D	5205A
10RZ47	5208A
10RZ47A	5208A
10RZ47B	5208A
10RZ47C	5208A
10RZ47D	5208A
10RZ51	5210A
10RZ51A	5210A
10RZ51B	5210A
10RZ51C	5210A
10RZ51D	5210A
10RZ56	5212A
10RZ56A	5212A
10RZ56B	5212A
10RZ56C	5212A
10RZ56D	5212A
10RZ68	5215A
10RZ68A	5215A
10RZ68B	5215A
10RZ68C	5215A
10RZ68D	5215A
10RZ75	5216A
10RZ75A	5216A
10RZ75B	5216A
10RZ75C	5216A
10RZ75D	5216A
10RZ82	5217A
10RZ82A	5217A
10RZ82B	5217A
10RZ82C	5217A
10RZ82D	5217A
10RZ91	5219A
10RZ91A	5219A
10RZ91B	5219A
10RZ91C	5219A
10RZ91D	5219A
10RZ100	5220A
10RZ100A	5220A
10RZ100B	5220A
10RZ100C	5220A
10RZ100D	5220A
10RZ110	5222A
10RZ110A	5222A
10RZ110B	5222A
10RZ110C	5222A
10RZ110D	5222A
10RZ120	5223A
10RZ120A	5223A
10RZ120B	5223A
10RZ120C	5223A
10RZ120D	5223A
10RZ130	5224A
10RZ130A	5224A
10RZ130B	5224A
10RZ130C	5224A
10RZ130D	5224A

To Be Replaced	ECG Replacement
10RZ150	5226A
10RZ150A	5226A
10RZ150B	5226A
10RZ150C	5226A
10RZ150D	5226A
10RZ160	5227A
10RZ160A	5227A
10RZ160B	5227A
10RZ160C	5227A
10RZ160D	5227A
10RZ180	5230A
10RZ180A	5230A
10RZ180B	5230A
10RZ180C	5230A
10RZ180D	5230A
10RZ200	5232A
10RZ200A	5232A
10RZ200B	5232A
10RZ200C	5232A
10RZ200D	5232A
10TB1	5502
10TB2	5504
10TB3	5506
10TB4	5507
10TB5	5528
10TB6	5529
10TB7	5530
10TB8	5531
10V	140A
10V(2 watt)	5125A
10V200	116
10V200P	116
10VJ	140A
10Z3.3T	5172A
10Z3.3T5	5111A
10Z3.3T10	5172A
10Z3.6T	5173A
10Z3.6T5	5173A
10Z3.6T10	5173A
10Z3.9T5	5174A
10Z3.9T10	5174A
10Z3.9T20	5174A
10Z4.3T5	5175A
10Z4.3T10	5175A
10Z4.3T20	5175A
10Z4.7T5	5176A
10Z4.7T10	5176A
10Z4.7T20	5176A
10Z5.1T5	5177A
10Z5.1T10	5177A
10Z5.1T20	5177A
10Z5.6T5	5178A
10Z5.6T10	5178A
10Z5.6T20	5178A
10Z6.2T5	5180A
10Z6.2T10	5180A
10Z6.2T20	5180A
10Z6.8T5	5181A
10Z6.8T10	5181A
10Z6.8T20	5181A
10Z7.5T5	5182A
10Z7.5T10	5182A
10Z7.5T20	5182A
10Z8.2T5	5183A
10Z8.2T10	5183A
10Z8.2T20	5183A
10Z9.1T5	5185A
10Z9.1T10	5185A
10Z9.1T20	5185A
10Z10	5186A
10Z10T5	5186A
10Z10T10	5186A
10Z10T20	5186A
10Z11T5	5187A
10Z11T10	5187A
10Z11T20	5187A
10Z12	5188A
10Z12T5	5188A
10Z12T10	5188A
10Z12T20	5188A
10Z13T5	5189A
10Z13T10	5189A
10Z13T20	5189A
10Z15T5	5191A
10Z15T10	5191A
10Z15T20	5191A
10Z16T5	5192A
10Z16T10	5192A
10Z16T20	5192A
10Z18T5	5194A
10Z18T10	5194A
10Z18T20	5194A
10Z20T5	5196A
10Z20T10	5196A
10Z20T20	5196A
10Z22T5	5197A
10Z22T10	5197A
10Z22T20	5197A
10Z24T5	5198A
10Z24T10	5198A
10Z24T20	5198A
10Z27T5	5200A
10Z27T10	5200A
10Z27T20	5200A
10Z30T5	5202A
10Z30T20	5202A
10Z33T5	5203A
10Z33T10	5203A
11-0399	121
11-0400	121
11-0422	123A
11-0423	172A
11-0429	116
11-0430	177

To Be Replaced	ECG Replacement
11-0769	116
11-0770	185
11-0771	116
11-0772	184
11-0773	185
11-0774	123A
11-0775	172A
11-0778	123A
11-0781	177
11-085001	109
11-085003	116
11-085004	109
11-085005	109
11-085007	109
11-085008	109
11-085010	123A
11-085012	177
11-085013	116
11-085014	109,110MP
11-085015	109
11-085022	109
11-085024	116
11/1 12/1	177(3)
11-9-156438	519
11/10	506
11/15	116
11/15-92	119
11/15(Boost)	119
11-102-001	166
11-113	1192
11-1592	116
11-11911-1	181
11-27070	199
11-102001	116
11-102003	166
11-108002	166
11-120007	116
11-691501	234
11-691502	234
11-691504	159
11B551	108
11B552	108
11B554	108
11B555	108
11B1052	108
11B1055	108
11C1B1	124
11C3B1	124
11C3B3	124
11C5B1	124
11C7B1	124
11C10B1	124
11C11B1	124
11C44	974
11C55	974
11C551	108
11C553	108
11C557	108
11C1051	108
11C1053	108
11C1057	108
11C1536	128
11J2	116
11J2F	116
11R05S	5870
11R1S	5872
11R2S	5874
11R3S	5876
11R4S	5878
11R5S	5880
11R6S	5882
11R8S	5886
11R10S	5890
11RC10	5522
11RC20	5524
11RC30	5526
11RC40	5527
11RC50	5528
11RC60	5529
11RC80	5531
11T4	5453
11T4S	5453
11Z6AF	5066A
11Z6F	5066A
11ZC11T5	5074A
11ZM11T5	5074A
12-085005	109
12-085006	109
12-085009	109
12-085029	109
12-085031	116
12-085034	109
12-085035	109
12-085038	109
12-085040	116
12-085041	110
12-087003	109
12-087004	177
12-1	154
12-1-70	123A
12-1-70-12	123A
12-1-70-12-7	123A
12-1-73	100
12-1-74	100
12-1-75	100
12-1-76	100
12-1-78	100
12-1-83	100
12-1-91	100
12-1-92	100
12-1-93	100
12-1-95	102A
12-1-96	102A
12-1-100	100
12-1-102	100

To Be Replaced	ECG Replacement
12-1-103	100
12-1-104	100
12-1-105	100
12-1-106	102A
12-1-107	102A
12-1-120	102A
12-1-128	100
12-1-135	160
12-1-137	160
12-1-138	160
12-1-139	160
12-1-148	102A
12-1-150	160
12-1-157	160
12-1-161	100
12-1-162	100
12-1-164	102A
12-1-179	100
12-1-180	100
12-1-184	102A
12-1-186	100
12-1-189	126
12-1-190	160
12-1-191	102A
12-1-226	102A
12-1-227	102A
12-1-228	160
12-1-229	160
12-1-230	160
12-1-231	160
12-1-232	102A
12-1-233	160
12-1-234	100
12-1-235	100
12-1-236	100
12-1-240	100
12-1-241	100
12-1-242	126
12-1-243	126
12-1-244	126
12-1-246	102A
12-1-254	100
12-1-256	160
12-1-257	126
12-1-258	160
12-1-259	160
12-1-260	160
12-1-266	102A
12-1-267	102A
12-1-270	121
12-1-271	121
12-1-272	102A
12-1-273	100
12-1-274	102A
12-1-275	100
12-1-276	123A
12-1-277	123A
12-1-278	123A
12-1-279	123A
12-1-289	100
12-1A	123A
12-1A0	123A
12-1A0R	123A
12-1A1	123A
12-1A2	123A
12-1A3	123A
12-1A3P	123A
12-1A4	123A
12-1A4-7	123A
12-1A4-7B	123A
12-1A5	123A
12-1A5L	123A
12-1A6	123A
12-1A6A	123A
12-1A7	123A
12-1A7-1	123A
12-1A8	123A
12-1A9	123A
12-1A9G	123A
12-1A19	123A
12-1A21	123A
12-1A82	123A
12/1N	115
12/1N10	178MP
12-2	225
12/3	113
12/3-04	113
12-4	123A
12-10	123A
12-11	123A
12-12	123A
12-13	123A
12-14	123A
12-15	123A
12-16	123A
12-17	123A
12-18	123A
12-19	123A
12-21-050	234
12/100	113
12-23163-3	107
12-28471-1(Plastic)	188
12-100001	116
12-100003	116
12-100008	116
12-100027	129
12-100047	130
12-101001	123A
12-102001	116
12-200009	177
12-679115-01	5547
12-680701-05	5547
12A700	5886
12A800	5886
12A900	5890

To Be Replaced	ECG Replacement
12A1000	5890
12A1027-P5	177
12A6240	100
12A7239P1	102
12A9244-1	160
12A9244-P2	160
12A9275	102
12A9275-1	102
12AA2	101
12B-2	116
12B-2B1P-M	116
12C05	5870
12C05R	5871
12C2	116
12C2P-114	166
12C5Y	142A
12C10	5872
12C10R	5873
12C15	5874
12C15R	5875
12C20	5874
12C20R	5875
12C30	5876
12C30R	5877
12C40	5876
12C40R	5879
12C50	5880
12C50R	5881
12C60	5882
12C60R	5883
12C70	5886
12C70R	5887
12C80	5886
12C80R	5887
12C90	5890
12C90R	5891
12C100	5890
12C100R	5891
12-CAM	159
12CF11	5887
12CLN	123A
12CZP-114	116(4)
12F5	5870
12F5A	5870
12F5B	5870
12F10	5872
12F10A	5872
12F10B	5872
12F15	5874
12F15A	5874
12F15B	5874
12F20	5874
12F20A	5874
12F20B	5874
12F30	5876
12F30A	5876
12F30B	5876
12F40	5878
12F40A	5878
12F40B	5878
12F50	5880
12F50A	5880
12F50B	5880
12F60	5882
12F60A	5882
12F60B	5882
12F70B	5886
12F80	5886
12F80A	5886
12F80B	5886
12F90	5890
12F90A	5890
12F90B	5890
12F100	5890
12F100A	5890
12F100B	5890
12FR5	5871
12FR5A	5871
12FR5B	5871
12FR10	5873
12FR10A	5873
12FR10B	5873
12FR15	5875
12FR15A	5875
12FR15B	5875
12FR20	5875
12FR20A	5875
12FR20B	5875
12FR30	5877
12FR30A	5877
12FR30B	5877
12FR40	5879
12FR40A	5879
12FR40B	5879
12FR50	5881
12FR50A	5881
12FR50B	5881
12FR60	5883
12FR60A	5883
12FR60B	5883
12FR70B	5887
12FR80	5887
12FR80A	5887
12FR80B	5887
12FR90	5891
12FR90A	5891
12FR90B	5891
12FR100	5891
12FR100A	5891
12FR100B	5891
12G4	506
12GC11	5878
12J2	116
12J2F	116
12JC11	5882

To Be Replaced	ECG Replacement
12LC11	5886
12LF11	5887
12M2	121
12M12T5	142A
12MC	160
12MZ	160
12NC11	5890
12NF11	5891
12P2	177
12-PG 01	234
12RCM5	5521
12RCM10	5522
12V	142A
12X047	123A
12Z6F	134A
13-0002	140A
13-0003	519
13-0003(Pace)	519
13-0004	109
13-0006	159
13-0006A	159
13-0009	229
13-004	109
13-006	159
13-0010	229
13-0014	175
13-0015	116
13-0017	5085A
13-0020	229
13-0021	123A
13-0022	123A
13-0024	123A
13-0028	195A
13-0032	130
13-0035	195A
13-0040	229
13-0041	123A
13-0043	159
13-0043A	159
13-0044	159
13-0044A	159
13-0048	123A
13-0049	184
13-0050	125
13-0058	123A
13-0061	159
13-0061A	159
13-0062	229
13-0062-1	229
13-0063	229
13-0064	311
13-0065	229
13-0078	5130A
13-0079	195A
13-0082	229
13-0084	159
13-0089	708
13-0091	816
13-0092	123A
13-0093	159
13-0094	184
13-0095	316
13-0097	182
13-0098	756
13-0099	5800
13-0026666-001	128
13-0-84	159
13-0100	135A
13-0101	312
13-0102	133
13-0103	7490
13-0104	74145
13-0106	5092A
13-0109	128
13-0114	312
13-0115	153
13-0117	614
13-0118	222
13-0123	923D
13-0126	107
13-0130	235
13-0135	724
13-0136	941M
13-0139	7474
13-0140	74S74
13-0142	74H08
13-0143	7400
13-0161	981
13-0164	5069A
13-0165	222
13-0178	293
13-0321-5	123A
13-0321-6	123A
13-0321-7	123A
13-0321-8	123A
13-0321-9	123A
13-0321-10	123A
13-0321-11	123A
13-0321-12	123A
13-0321-14	108
13-0321-15	108
13-0321-16	108
13-0321-17	108
13-0321-21	108
13-0321-81	123A
13-076001	724
13-076002	703A
13-085012	109
13-085015	177
13-085022	177
13-085023	177
13-085024	125
13-085026	177
13-085027	125
13-085028	139A

To Be Replaced	ECG Replacement
13-085029	110
13-085039	116
13-085042	139A
13-087005	102A
13-087005(Diode)	177
13-087027	116
13-0161882-101	254
13-0162399-102	123AP
13-1-6	703A
13-2P64	152
13-2P64-1	152
13-3-6	726
13-4P63	152
13-4P63-1	152
13-4P63-i	152
13-9-4	HiDiv-2
13-9-6	703A
13-10-4	HiDiv-2
13-10-6	703A
13-10-6(Fleetwood)	703A
13-11-6	703A
13-11-6(SEARS)	703A
13-12-4	HiDiv-2
13-17-6	123A*
13-17-6(Sears)*	123A
13-18-4	HiDiv-2
13-19-4	HiDiv-2
13-20-4	HiDiv-2
13-21-4	HiDiv-2
13-26-6	718
13-27-6	711
13-27-6(Sears)	711
13-28-6	706
13-28-6(Sears)	706
13-29-6	712
13-29-6(Sears)	712
13-30-6	780
13-38-6	906
13-40-6	715
13-41-6	790
13-42-6	714
13-50-6	767
13-52-6	722
13-52-G	722
13-53-6	909
13-56-6	738
13-57-6	739
13-58-6	733
13-59-6	804
13-60-6	722
13-61-6	804
13-64-6	712
13-67-6	739
13-74-6	5081A
13-1023-1	278
13-1025-1	283
13-1032-5	108
13-1037-1	257
13-1836-1	123A
13-1847-1	196
13-2033-3	199
13-2323-4	289
13-2324-6	123A
13-2338-4	199
13-2339-3	199
13-2384-2	161
13-3684	5314
13-3686-1	287
13-3789	238
13-4085-41	199
13-4085-121	199
13-4085-122	199
13-4377-1	116
13-5018-6	941M
13-5020-6	923D
13-10102-1	116
13-10320-14	161
13-10321-1	108
13-10321-2	108
13-10321-3	116
13-10321-5	108
13-10321-6	108
13-10321-7	108
13-10321-8	108
13-10321-9	108
13-10321-10	108
13-10321-11	108
13-10321-12	108
13-10321-14	108
13-10321-15	108
13-10321-16	108
13-10321-17	108
13-10321-20	108
13-10321-21	108
13-10321-26	108
13-10321-29	107
13-10321-30	108
13-10321-31	107
13-10321-32	107
13-10321-37	222
13-10321-41	108
13-10321-43	108
13-10321-46	229
13-10321-47	161
13-10321-51	108
13-10321-54	177
13-10321-55	177
13-10321-62	229
13-10321-73	229
13-10321-75	108
13-10321-76	161
13-10321-77	108
13-10321-78	161
13-10321-79	161

To Be Replaced	ECG Replacement
13-10321-81	229
13-10321-82	229
13-12001-0	109
13-12001-0/3626	109
13-12002-0	109
13-12003-0	109
13-12003-0/3626	109
13-13002-0/3626	109
13-13532-1	159
13-14085-1	108
13-14085-2	108
13-14085-3	107
13-14085-4	107
13-14085-6	123A
13-14085-7	123A
13-14085-9	102A
13-14085-10	102A
13-14085-11	158
13-14085-12	158
13-14085-13	159
13-14085-14	172A
13-14085-15	123A
13-14085-15A	128
13-14085-16	107
13-14085-17	107
13-14085-18	102A
13-14085-23	102A
13-14085-24	108
13-14085-25	158
13-14085-26	229
13-14085-27	108
13-14085-28	160
13-14085-29	124
13-14085-30	160
13-14085-31	126
13-14085-32	126
13-14085-33	126
13-14085-34	123A
13-14085-35	102A
13-14085-39	199
13-14085-41	199
13-14085-42	229
13-14085-49	199
13-14085-50	123A
13-14085-54	289
13-14085-60	102A
13-14085-71	102A
13-14085-72	123A
13-14085-74	108
13-14085-75	108
13-14085-76	108
13-14085-77	108
13-14085-83	123A
13-14085-84	123A
13-14085-85	123A
13-14085-86	187
13-14085-87	159
13-14085-88	152
13-14085-89	123A
13-14085-91	128
13-14085-91	128
13-14085-92	129
13-14085-93	126
13-14085-95	199
13-14085-96	199
13-14085-97	199
13-14085-119	289
13-14085-123	184
13-14085-124	185
13-14085-125	199
13-14085-126	184
13-14094-1	109
13-14094-2	109
13-14094-3	109
13-14094-5	109
13-14094-6	125
13-14094-8	110
13-14094-9	109
13-14094-11	109
13-14094-12	116
13-14094-15	109
13-14094-16	116
13-14094-17	116
13-14094-24	116
13-14094-33	177
13-14094-36	601
13-14094-38	116
13-14094-39	116
13-14094-42	116
13-14094-52	116
13-14094-53	519
13-14094-54	116
13-14097-7	177
13-14261-1	116
13-14261-3	116
13-14278-1	614
13-14278-2	614
13-14279-1	103A
13-14604-1	121MP
13-14604-1A	121MP
13-14604-1B	121MP
13-14604-1C	121MP
13-14604-1D	121MP
13-14604-1E	121MP
13-14605-1	128
13-14606-1	123A
13-14627-1	116
13-14627-4	116
13-14735	121
13-14735-1	121
13-14735A	121
13-14777-1	121MP
13-14777-1A	121MP
13-14777-1B	121MP
13-14777-1C	121MP

To Be Replaced	ECG Replacement
13-14777-1D	121MP
13-14778-1	121MP
13-14778-1A	121MP
13-14778-1B	121MP
13-14778-1C	121MP
13-14778-1D	121MP
13-14879-1	145A
13-14879-2	142A
13-14879-3	145A
13-14879-4	138A
13-14879-6	5079A
13-14879-7	5079A
13-14886-1	126
13-14887-1	126
13-14888-3	102
13-14889-1	126
13-14890-1	109
13-15465-1	178MP
13-15804-1	123A
13-15805-1	102
13-15806-1	121
13-15808-1	161
13-15808-2	161
13-15809-1	154
13-15810-1	108
13-15833-1	128
13-15835-1	161
13-15836-1	102
13-15840-1	123A
13-15840-2	123A
13-15841-1	108
13-15842-1	123A
13-15865-1	123A
13-16104-8	116
13-16104-9	116
13-16105-3	119
13-16106-1	118
13-16106-3	503
13-16106-4	504
13-16106-5	504
13-16106-6	504
13-16106-7	504
13-16219-7	113
13-16235-8	109
13-16247-3	116
13-16570-1	159
13-16570-1A	159
13-16570-2	159
13-16570-2A	159
13-16592-1	127
13-16607-1	127
13-16608-1	127
13-16744-1	108
13-16769-1	123A
13-17174-1	125
13-17174-2	125
13-17174-3	125
13-17174-4	156
13-17174-5	125
13-17204-1	177
13-17557-1	116
13-17569-1	177
13-17569-2	177
13-17596-1	120
13-17596-2	519
13-17596-3	519
13-17596-4	519
13-17596-5	519
13-17596-6	519
13-17596-7	519
13-17596-8	519
13-17596-9	519
13-17596-10	519
13-17597-4	177
13-17607-1	127
13-17607B	127
13-17608-1	127
13-17608-2	127
13-17608B	127
13-17608C	127
13-17609-1	127
13-17825-1	116
13-17917-1	552
13-17917-2	552
13-17918-1	130
13-18032-1	102A
13-18033-1	102A
13-18034	121
13-18034-1	121
13-18034A	121
13-18087-1	123A
13-18087-2	123A
13-18158-1	123A
13-18198-1	179
13-18282	124
13-18282-1	124
13-18304-1	102A
13-18359	124
13-18359-1	124
13-18359-3	124
13-18359A	124
13-18363	123
13-18363-1	123A
13-18363-1A	123
13-18364-1	123A
13-18365-1	199
13-18458-1	116
13-18481-1	5802
13-18481-2	5800
13-18481-3	5802
13-18642-1	179
13-18642-2	179
13-18642-2D	179
13-18642-2E	179
13-18642-2F	179

To Be Replaced	ECG Replacement
13-18642-3	179
13-18642-3A	179
13-18642-3B	179
13-18642-20	179(2)
13-18642-21	179(2)
13-18654-1	103A
13-18671-1	102A
13-18671-1A	102A
13-18671-1B	102A
13-18671-1C	102A
13-18924-1(large case)	5452
13-18924-1(small case)	5400
13-18924-2	5401
13-18924-3	5400
13-18924-4	5400
13-18924-5	5400
13-18924-6	5403
13-18927-1	123A
13-18927-1A	128
13-18944-1	100
13-18944-2	100
13-18946-1	160
13-18946-2	160
13-18947-1	160
13-18948-1	160
13-18948-2	160
13-18949-1	108
13-18950-1	108
13-18951-1	126
13-18951-2	126
13-19776-1	159
13-21606-1	127
13-22017-0	177
13-22017-0/3626	177
13-22154-0/3626	614
13-22154-500	610
13-22319-0	5074A
13-22319-500	5074A
13-22452-0	116
13-22463-0	116
13-22463-1	116
13-22463-1/3626	116
13-22463-2	116
13-22581	123A
13-22581-1	123A
13-22582-1	159
13-22582-1A	159
13-22606-0	177
13-22606-0/3626	519
13-22609-0	177
13-22690-1	132
13-22692-1	132
13-22692-2	132
13-22739-1	121MP
13-22739-Blue	121MP
13-22739-Br	121MP
13-22739-Gr	121MP
13-22739-OR	121MP
13-22739-Red	121MP
13-22739-Yel	121MP
13-22741	121
13-22741-1	121MP
13-22741-2	121MP
13-22741-Blue	121MP
13-22741 Br	121MP
13-22741-GR	121MP
13-22741-OR	121MP
13-22741-Red	121MP
13-22741-YEL	121MP
13-23001-2	229
13-23002-2	229
13-23013-2	229
13-23160-2	233
13-23160-2/3626	229
13-23160-3	319
13-23160-3/3626	229
13-23160-4	123A
13-23160-4/3626	229
13-23160-5	229
13-23160-5/3626	229
13-23163-2	107
13-23163-3	107
13-23309-3/3626	123A
13-23309-4/3624	123A
13-23309-5	123A
13-23323-4	289
13-23323-5	289
13-23323-6	108
13-23324-6	123A
13-23325-5	159
13-23326-6	299
13-23327-4	192
13-23329-5	159
13-23338-3	199
13-23338-4	199
13-23339-2	199
13-23339-3	199
13-23342-2	199
13-23351-2	159
13-23424-1	319
13-23505-2	297
13-23506-2	298
13-23507-0	184
13-23508-0	185
13-23510-3	297
13-23510-4	287
13-23516-2	295
13-23517-2	152
13-23518-2	153
13-23543-1	124
13-23543-3	124
13-23594-1	130
13-23708-4/3624	159
13-23785-1	102A
13-23822	319

To Be Replaced	ECG Replacement
13-23822-1	319
13-23824-1	319
13-23824-1(3rdIF)	233
13-23824-1(Last IF)	233
13-23824-2	319
13-23824-3	319
13-23824-3(LAST IF)	233
13-23825-1	154
13-23826-1	159
13-23826-1A	159
13-23826-2	159
13-23826-2A	159
13-23826-3	159
13-23826-3A	159
13-23840-1	128
13-23916-1	123A
13-23917-1	177
13-23924-1	233
13-25343-1	124
13-26009-1	161
13-26377-1	131
13-26377-2	155
13-26386-1	159
13-26386-1A	159
13-26386-2	159
13-26386-2A	159
13-26386-3	159
13-26386-4	159
13-26576-1	161
13-26576-2	161
13-26577-1	161
13-26577-2	161
13-26577-3	161
13-26614-1	156
13-26666	128
13-26666-1	128
13-27050-1	103
13-27404-1	123AP
13-27404-2	123A
13-27432-1	194
13-27433-1	123A
13-27443-1	128
13-27532-2	128
13-27974-1	157
13-28222-1	183
13-28222-2	182
13-28222-3	182
13-28222-4	182
13-28336-1	185
13-28336-2	184
13-28336-20	184&185
13-28386-1	129
13-28391-1	159
13-28391-1A	159
13-28391-2	159
13-28391-2A	159
13-28392-1	123AP
13-28392-1!	192
13-28392-2	123AP
13-28392-2!	192
13-28392-3	192
13-28392-3!	194
13-28392-5	192
13-28393-1	159
13-28393-1A	159
13-28393-2	159
13-28393-2A	159
13-28393-3	159
13-28394-1	128
13-28394-2	128
13-28394-3	128
13-28394-4	129
13-28394-4A	129
13-28394-5	129
13-28394-5A	129
13-28394-6	129
13-28396-1	223
13-28432-1	194
13-28432-2	154
13-28469-2	152
13-28471-1(Metal)	128
13-28471-1(PLASTIC)	188
13-28532-1	182
13-28583-1	222
13-28584	108
13-28584-1	108
13-28654-1	312
13-28654-2	312
13-28654-3	452
13-28654-4	452
13-29023-3	199
13-29033-1	123A
13-29033-2	199
13-29033-3	199
13-29033-4	199
13-29033-6	199
13-29165-1	156
13-29165-2	156
13-29392-2	108
13-29432-1	123A
13-29437-1	191
13-29600-1	5014A
13-29600-2	5018A
13-29656-1	118
13-29663-1	506
13-29687-2	177
13-29775-1	172A
13-29775-2	172A/410
13-29775-3	172A/410
13-29776-1	159
13-29776-1A	159
13-29776-2	159
13-29776-3	159
13-29861-1	177
13-29867-1	177

To Be Replaced	ECG Replacement
13-29867-2	177
13-29868-1	177
13-29947-1	123AP
13-29974-4	157
13-30281	109
13-31013-1	123
13-31013-1/2	159
13-31013-1(Sylv.)	159
13-31013-3	113
13-31013-4	108
13-31013-5	161
13-31013-6	116
13-31014-1	116
13-31014-2	113
13-31014-3	116
13-31014-4	112
13-31014-6	116
13-32362-1	123AP
13-32364-1	159
13-32366-1	229
13-32366-2	108
13-32630-1	123AP
13-32630-2	192
13-32630-3	123AP
13-32630-4	192
13-32631-1	159
13-32631-2	193
13-32631-3	159
13-32631-4	193
13-32632-1	188or210
13-32634-1	186
13-32635-1	187
13-32636-1	152
13-32638-1	184
13-32640-1	152
13-32642-1	184
13-33172-1	551
13-33172-2	551
13-33173-1	220
13-33174-1	171
13-33174-2	171
13-33175-1	172A
13-33175-3	172A
13-33176-1	171
13-33177-1	613
13-33178-1	193
13-33179-1	5099A
13-33179-2	145A
13-33179-4	140A
13-33179-5	5079A
13-33179-6	142A
13-33179-7	5097A
13-33179-8	5082A
13-33179-10	5096A
13-33179-11	143A
13-33180-1	188
13-33181-1	389
13-33181-2	389
13-33182-1	162
13-33182-2	162
13-33183-0	5452
13-33183-1	5421
13-33184-1	6402
13-33185-1	210
13-33186-1	147A
13-33187-1	5047A
13-33187-2	5050A
13-33187-3	5029A
13-33187-4	5031A
13-33187-5	5048A
13-33187-6	5019A
13-33187-7	5019A
13-33187-10	5055A
13-33187-11	5021A
13-33187-12	5011A
13-33187-13	5052A
13-33187-14	5006A
13-33187-15	5032A
13-33187-16	5033A
13-33187-17	5007A
13-33187-18	5024A
13-33187-19	5008A
13-33187-21	5022A
13-33187-23	5030A
13-33187-24	5020A
13-33187-26	5015A
13-33188-1	182
13-33188-2	130
13-33189-1	507
13-33190-1(ROUND)	5304
13-33190-1(SQUARE)	5314
13-33350-1	123A
13-33376-1	116
13-33595-1	123A
13-33595-2	123A
13-33595-3	123A
13-33742-1Metal	128/401
13-33742-1Plastic	188
13-33925-1	184
13-33959-1	5400
13-34002-1	196
13-34002-2	196
13-34002-3	241
13-34002-4	196
13-34002-5	241
13-34003-1	192A
13-34003-1(METAL)	128
13-34004-1	189
13-34004-1(H SINK)	193A
13-34004-1(Metal)	129
13-34045-1	108
13-34045-2	108
13-34046-1	186
13-34046-2	186

To Be Replaced	ECG Replacement
13-34046-3	186
13-34046-4	186
13-34046-5	291
13-34047-1	187
13-34047-2	187
13-34047-3	187
13-34047-4	292
13-34056-1	177
13-34057-1	116
13-34089-2	228A
13-34089-4	157
13-34367-1	159
13-34367-3	159
13-34368-1	5802
13-34369-1	106
13-34371-1	128
13-34372-1	190
13-34372-2	186
13-34372-3	186
13-34373-1	189
13-34373-2	187
13-34373-3	187
13-34374-1	181
13-34375-1	132
13-34375-2	312
13-34378-1	132
13-34378-2	312
13-34378-3	312
13-34381-1	199
13-34381-2	199
13-34684-1	181
13-34838-1	196
13-34839-1	197
13-34901-1	5814
13-34940-1	159
13-35059-1	712
13-35089-1	228
13-35089-2	228
13-35089-3	228
13-35089-4	228
13-35226-1	123AP
13-35257-1	157
13-35324-1	265
13-35472-1	198
13-35550	108
13-35550-1	194
13-35621-1	109
13-35792-1	102A
13-35807-1	194
13-35807-2	123A
13-36314-1	241
13-36386-1	159
13-36440-1	284
13-36440-2	284
13-36441-2	285
13-36442-1	331
13-36442-2	331
13-36443-1	332
13-36443-2	332
13-36508-1	188
13-36508-2	188
13-36509-1	189
13-36509-2	189
13-37526-1	188
13-37527-1	189
13-37708-1	284
13-37867-1	287
13-37868-1	506
13-37869-1	287
13-37870-1	165
13-37870-2	165
13-37870-3	165
13-37900-1	220
13-37905-1	147A
13-37933-2	504
13-39003-0	5400
13-39003-500	5400
13-39004-1	152
13-39004-2	152
13-39044-2	152
13-39046-3	186
13-39047-3	187
13-39072-1	552
13-39072-2	552
13-39072-7	552
13-39073-1	506
13-39074-1	291
13-39074-2	291
13-39099-1	152
13-39099-2	291
13-39100-1	153
13-39100-2	197
13-39114-1	287
13-39114-2	192
13-39114-3	192
13-39115-1	288
13-39115-2	192
13-39115-3	193
13-39145-1	191
13-39146-2	191
13-39174-1	191
13-39678-1	5604
13-39678-3	5604
13-39678-4	5604
13-39696-3	152
13-39819-1	153
13-39819-2	153
13-39851-1	194
13-39860-1	116
13-39884-1	152
13-39884-2	152
13-39953-1	198
13-39970-1	159
13-40083-1	159
13-40083-2	159

To Be Replaced	ECG Replacement
13-40083-3	159
13-40142-1	125
13-40142-2	125
13-40142-3	125
13-40312-1	199
13-40338-1	331
13-40339-1	332
13-40342-1	327
13-40344-1	373
13-40345-1	374
13-40346-1	181
13-40347-1	180
13-41122-1	125
13-41122-2	116
13-41122-3	116
13-41123-1	125
13-41123-2	125
13-41123-3	125
13-41123-4	125
13-41542-1	5602
13-41542-2	5605
13-41628-1	186
13-41628-2	186
13-41628-3	186
13-41628-5	291
13-41629-2	187
13-41629-4	292
13-41738-1	280
13-43005	291
13-43005-1	291
13-43250-1	600
13-43382-1	503
13-43463-1	238
13-43463-2	165
13-43633-1	283
13-43634-1	159
13-43635-1	196
13-43766-1	116
13-43773-1	123AP
13-43777-1	552
13-43790-1	186
13-43791-1	187
13-43955-1	519
13-43956-1	515
13-44290	133
13-44291	133
13-45016-1	389
13-45016-2	389
13-45017-1	5137A
13-45018-1	228A
13-45321-1	228A
13-45321-2	228A
13-45539-1	238
13-46044-1	377
13-46045-1	378
13-50484-1	100
13-50486-1	100
13-50631-1	100
13-50944-1	100
13-55009-1	127
13-55009-2	127
13-55010-1	503
13-55018-4	128
13-55020-1	108
13-55029-1	116
13-55030-1	506
13-55031-1	506
13-55031-2	506
13-55031-3	506
13-55046-1	109
13-55061-1	123A
13-55061-2	123A
13-55062-1	154
13-55063-1	108
13-55064-1	128
13-55065-1	108
13-55066-1	123A
13-55066-2	123A
13-55067-1	123A
13-55068-1	123A
13-55069-1	159
13-55069-1A	159
13-55078-1	506
13-55166-1	109
13-55166-1/2439-2	109
13-55166-1/3464	109
13-55332-1	142A
13-55333-1	178
13-67539-1	166
13-67539-1/3464	166
13-67539-1(Motorola)	116
13-67544-1	136A
13-67544-1/3464	136A
13-67583-5	108
13-67583-6	123A
13-67583-6/3464	107
13-67585-4	123A
13-67585-4/3464	107
13-67585-5	123A
13-67585-5/2439-2	108
13-67585-5/3464	123A
13-67585-6/2439-2	108
13-67585-7/2439-2	123A
13-67586-3	123A
13-67586-3/3464	123A
13-67590-1	177
13-67590-1/2439-2	109
13-67590-1/3464	177
13-67599-3	102A
13-67599-3/2439-2	102A
13-67599-3/3464	158
13-68617-1	123A
13-85943-1	113
13-85943-2	113
13-85943-3	113

To Be Replaced	ECG Replacement
13-85962-1	109
13-86416-1	103
13-86420-1	101
13-87433-1	101
13-87539-4(Realtone)	166
13-88302	117
13-94096-2	102A
13-100000	804
13-105698-1	128
13-283361-1	197
13-331182-1	162
13-547604	519
13-1000000	804
13-1000001	804
13-1032176	161
13-1261355-101	129
13-3014132-1	382
13-3015121-1	238
13-3015122-1	123AP
13-3015123-1	159
13-3015124-1	397
13-3015125-1	386
13-3015126-1	156
13-3015127-1	5314
13-3015128-1	287
13-3015132-1	382
13-3404704	292
13-4800869-145	129
13-4800869-256	6401
13-4800869-525	123AP
13-4882256-303	5069A
13-4882256-312	5011A
13-4882256-314	145A
13-4882256-318	5018A
13-4882256-320	146A
13-4882256-333	5002A
13-4882256-359	145A
13-4882256-361	5075A
13-4882525-707	5800
13-4882732-304	5944
13-4883461-512	146A
13-4883461-518	5077A
13-4883461-535	5137A
13-4800869145	129
13-B022222-000	123A
13-B023584-000	286
13-B025656-000	157
13-B026304-000	316
13BKJ1(GE)	119
13D4	116
13DD02F	140A
13J2	116
13J2F	116
13P1	116
13P2	177
13P2(Rectifier)	125
13RC2	5540
13RC5	5541
13RC10	5542
13RC15	5543
13RC20	5543
13RC25	5544
13RC30	5544
13RC40	5545
13S	502
13Z6AF	5067A
13Z6F	5067A
13Z-1005	109
14-0072-1(Philco)	116
14-0072-2 (Philco)	116
14-0072-3(Philco)	116
14-0086-1	129
14-0104-1	152
14-0104-2	153
14-0104-3	129
14-0104-4	128
14-0104-5	172A
14-0104-6	5066A
14-0104-7	123A
14-1	123A
14-2	123A
14-3	123A
14-10	109
14-19-273	541
14-19-275	548
14-19-723	541
14-19-725	548
14-201i-02	779-1*
14-501-01	113
14-501-02	113
14-503-01	114
14-503-02	114
14-503-03	114
14-503-04	114
14-503-08	114
14-504-01	109
14-504-04	114
14-507-01	177
14-509-01	142A
14-509-02	135A
14-510-01	109
14-511-01	109
14-512-01	109
14-513-01	109
14-514-01	109
14-514-01/51	109
14-514-02	177
14-514-03	506
14-514-03/53	506
14-514-04	110MP
14-514-04/64	110MP
14-514-05	109
14-514-05/55	109
14-514-06	109
14-514-07	506

To Be Replaced	ECG Replacement
14-514-07/57	506
14-514-08	109
14-514-08/58	109
14-514-09	109
14-514-10	109
14-514-10/60	109
14-514-11	110MP
14-514-11/61	110MP
14-514-12	519
14/514-12/62	506
14-514-13	110
14-514-13/63	110
14-514-14	506
14/514-14/64	506
14-514-15	177(2)
14-514-16	110MP
14-514-16/66	110MP
14-514-17	177
14-514-17/67	506
14-514-18	506
14-514-18/68	506
14-514-19	177
14/514-19/69	506
14-514-20	178MP
14-514-20/70	506
14-514-21	109
14-514-22	109
14-514-22/72	109
14-514-23	506
14-514-23/73	506
14-514-55	109
14-514-61	109
14-514-62	519
14-514-64	519
14-514-65	178MP
14 514 66	506
14-514-70	177
14-514-72	109
14 514 74	506
14 514 75	116
14-515-01	142A
14-515-02	135A
14-515-03	142A
14-515-04	138A
14-515-05	5077A
14-515-06	5186A
14-515-06/66	109
14-515-07	145A
14-515-08	5188A
14-515-09	145A
14-515-11	145A
14-515-13	138A
14-515-15	135A
14-515-18	141A
14-515-23	5024A
14-515-25	142A
14-515-26	138A
14-515-27	5071A
14 515 28	5082A
14-515-29	151A
14 515 29	151A
14-515-30	5071A
14-515-73	145A
14-557-10	102A
14-569-09	160
14-573-10	121
14-574-10	121
14-575-10	123A
14-577-10	102A
14-578-10	121
14-579-10	121
14-580-01	160
14-581-01	160
14-582-01	126
14-583-01	123A
14-584-01	102A
14-585-01	160
14-586-01	104
14-587-01	160
14-588-01	160
14-589-01	121
14-590-01	121
14-591-01	160
14-593-01	6400
14-593-03	6400
14-600-01	160
14-600-02	160
14-600-04	160
14-600-11	160
14-600-13	160
14-600-16	160
14-600-19	160
14-600-20	160
14-600-22	160
14-601-01	121
14-601-02	179
14-601-03	121
14-601-04	121
14-601-05	121
14-601-06	121
14-601-07	121
14-601-08	104
14-601-09	121
14-601-10	130
14-601-11	121
14-601-12	130
14-601-13	130
14-601-14	162
14-601-15	130
14-601-15A	130
14-601-16	130
14-601-16A	130
14-601-17	184
14-601-18	223
14-601-20	223

To Be Replaced	ECG Replacement
14-601-23	223
14-601-24	223
14-601-26	181
14-601-27	165
14-601-28	123A
14 601 28	123A
14 601 29	123A
14-602-01	123A
14-602-02	123A
14-602-03	123A
14-602-04	102A
14-602-05	102A
14-602-05A	102A
14-602-06	158
14-602-07	158
14-602-08	158
14-602-09	158
14-602-3	103A&158(CP)
14-602-10	102A
14-602-11	159
14-602-11A	159
14-602-12	123A
14-602-13	123A
14-602-14	123A
14-602-15	102A
14-602-16	123A
14-602-17	123A
14-602-18	128
14-602-19	154
14-602-20	159
14-602-20A	159
14-602-21	103A
14-602-22	123A
14-602-23	123A
14-602-24	128
14-602-26	123A
14-602-27	103A&158CP
14-602-28	129
14-602-28A	129
14-602-29	128
14-602-30	128
14-602-31	161
14-602-32	159
14-602-32A	159
14-602-33	103A&158(CP)
14-602-34	161
14-602-35	123A
14-602-36	154
14-602-37	154
14-602-38	103A&158CP
14-602-39	103A&158CP
14-602-40	103A&158CP
14-602-41	108
14-602-42	159
14-602-42A	159
14-602-43	128
14-602-44	159
14-602-44A	159
14-602-46	199
14-602-46A	199
14-602-47	159
14-602-47A	159
14-602-48	123A
14-602-49	128
14-602-50	123A
14-602-51	158
14-602-52	103A
14-602-54	193
14-602-54A	159
14-602-55	192
14-602-55A	123A
14-602-56	159
14-602-56A	159
14-602-57	128&129
14-602-58	159
14-602-58A	159
14-602-59	128
14-602-60	129
14-602-61	123A
14-602-62	123A
14-602-63	199
14-602-64	234
14-602-65	128
14-602-66	129
14-602-67	175
14-602-68	159
14-602-69	123A
14-602-70	192
14-602-71	193
14-602-72	128
14-602-73	129
14-602-74	192
14-602-75	193
14-602-76	198
14-602-77	107
14-602-77B	107
14-602-78	123A
14-602-79	129
14-602-79A	129
14-602-80	123A
14-602-81	123A
14-602-85	129
14-602-87	123A
14-602-88	159
14-602-89	123A
14-602-90	159
14-602-580	159
14-602-600	159
14-603-01	128
14-603-02	161
14-603-02A	128
14-603-03	123A
14-603-04	123A
14-603-05	107
14-603-05-2	107

To Be Replaced	ECG Replacement
14-603-06	107
14-603-07	128
14-603-08	161
14-603-09	161
14-603-10	123A
14-603-11	123A
14-603-12	108
14-603-13	161
14-604-01	155&131CP
14-604-02	155&131CP
14-604-03	131&155
14-604-07	121
14-604-08	121
14-607-29	129
14-607-29A	129
14-608-01	184
14-608-02	184
14-608-02A	196
14-608-03	184
14-608-04	184
14-609-00	152
14-609-01	191
14-609-01A	191
14-609-02	171
14-609-02A	191
14-609-03	152
14-609-03A	196
14-609-04	152
14-609-05	191
14-609-06	152
14-609-08	152
14-609-09	196
14-609-49A	108
14 651 12	123A
14-651-12	123A
14-652-12	161
14-653-21	161
14-654-21	128
14-655-13	123A
14-656-21	123A
14-659-12	123A
14-660-12	123A
14-661-21	161
14-700-01	132
14-700-02	133
14-700-03	132
14-700-04	132
14-700-05	132
14-700-06	132
14-710-21	132
14-713-31	132
14-713-32	132
14-714-13	132
14-800-32	123A
14 801 12	123A
14-801-23	199
14 801 23	123A
14-802-12	123A
14-803-12	159
14-803 12	159
14-803-32	234
14-804-12	159
14 805 12	123A
14-805-12	123A
14 806 12	123A
14-806-12	123A
14-806-23	123A
14 807 12	106
14-807-12	106
14 807 23	123A
14 808 12	159
14-808-12	159
14 809 23	123A
14-809-23	123A
14-809-32	123A
14-811-12	194
14-850-12	161
14-851-12	161
14-851-32	123A
14-853-23	123A
14-854-12	123A
14 854 12	123A
14-855-32	159
14-856-23	159
14 857 12	159
14-857-12	159
14 857 32	129
14-857-79	159
14-858-12	123A
14-861-12	106
14 861 12	106
14-862-23	123A
14 862 32	123A
14-862-32	123A
14-863-23	159
14-864-12	123A
14-864-23	159
14 865 12	123A
14-865-12	123A
14-866-32	123A
14 866 32	123A
14-867-32	159
14-900-12	191
14-901-12	171
14-902-23	152
14-903-23	152
14 904 12	191
14-904-12	191
14-905-23	152
14-906-13	184
14-907-13	184
14-908-23	152
14 909 23	152
14 910 13	158
14-910-13	184

@, * — See special notes on inside back cover.

To Be Replaced	ECG Replacement
14-911-13	184
14-1007-00	705A
14-2000-01	172A
14-2000-02	172A
14-2000-03	172A
14-2000-04	172A
14-2000-05	172A
14-2000-23	172A
14-2002-01	133
14-2007-00	705A
14-2007-00B	707
14-2007-01	707
14-2007-02	705A
14-2007-03	707
14-2007-04	705A
14-2008-01	708
14-2009-01	814
14-2010-01	790
14-2010-02	790
14 2010 02	172A
14-2011-01	779-1*
14-2012-01	801
14-2014-01	815
14-2052-23	172A
14-2053-23	172A
14-2054-01	731
14-2056-01	1114
14-32430	108
14-40325A	130
14-40363A	130
14-40369A	130
14-40421A	130
14-40464A	130
14-40465A	130
14-40466A	130
14-40471	130
14-40934-1	130
14 90412	191
14-4882466-813	116
14A	121
14A0	121
14A1	121
14A1-A82	121
14A2	121
14A3	121
14A4	121
14A5	121
14A6	121
14A7	121
14A8	121
14A8-1	160
14A8-1-12	160
14A9	121
14A10	121
14A10R	121
14A11	121
14A11	121
14A12	121
14A13	121
14A13P	121
14A14	121
14A14-7	121
14A14-7B	121
14A15	121
14A15L	121
14A16	121
14A16-5	121
14A17	121
14A17-1	121
14A18	121
14A19	121
14A19G	121
14B348-003	523
14B348-1	523
14B348-2	523
14B348-3	523
14B348-4	523
14B348-5	523
14i4-180	175
14J2	116
14J2F	116
14LN033	1060
14LN034	1181
14LQ007	1003
14MW69	102A
14P2	116
14Z6AF	5068A
14Z6F	5068A
15-0009-05	196
15-008-1	106
15-01742	159
15-01913-00	159
15-01999	123A
15-02155	128
15-02757-00	199
15-02762-00	159
15-02762-1	159
15-02762-2	159
15-02979	159
15-03014-00	123A
15-03014-00	123A
15-03051-00	107
15-03068	130
15-03099	159
15-03100	123A
15-03409-0	159
15-03409-02	159
15-03409-1	159
15-05302	123A
15-05369	123A
15-05415	218
15-05650	123A
15-08800U	108
15-09090-01	159
15-09338	123A

To Be Replaced	ECG Replacement
15-09587	199
15-09650	128
15-09980	123A
15-082019	123A
15-085002	109
15-085003	109
15-085004	113
15-085005	177
15-085006	116
15-085007	116
15-085008	177
15-085008(Midland)	506
15-085009	109
15-085018	112
15-085027	109
15-085032	109
15-085033	125
15-085037	109
15-085038	113
15-085039	113
15-085040	116
15-085041	125
15-085042	174
15-085043	116
15-085047	113
15-085061	109
15-088002	159
15-088002A	159
15-088003	107
15-088004	108
15-1	123A
15-2	123A
15-3	159
15-4	159
15-5	159
15-19CC19	5100A
15-20A70	110
15-20A90	110
15-20A-90M	109
15-30	159
15-40	159
15-50	159
15-166N	107
15-875-075-001	159
15-875-075-003	123A
15-1231-4	503
15-3793	797
15-3795	740A
15-7142C-1	722
15-10062-0	128
15-14471-1	1085
15-14504-1	794
15-26587	703A
15-26587-1	703A
15-31015-1	1022
15-33201	712
15-33201-1	712
15-33201-2	712
15-34005-1	727
15-34048-1	708
15-34048-2	708
15-34049	722
15-34049-1	722
15-34049-3	722
15-34202-1	727
15-34379-1	720
15-34401-1	762
15-34408-2	708
15-34452	709
15-34452-1	709
15-34502-1	778
15-34502-2	778
15-34502-3	778
15-34503	722
15-34503-1	722
15-34503-2	722
15-34906-1	799
15-35059-1	712
15-35059-2	712
15-36446-1	743
15-36647-1	813
15-36995-1	744
15-37534-1	794
15-37534-2	794
15-37700-1	792
15-37701-02	793
15-37701-1	793
15-37701-2	793
15-37702-1	714
15-37703-1	715
15-37704-1	790
15-37833-1	909D
15-37833-2	909D
15-39060-1	747
15-39060-2	747
15-39061-1	795
15-39075-1	738
15-39207-1	808
15-39208-1	809
15-39209-1	791
15-39600-1	794
15-39600-2	794
15-39600-3	794
15-40140-2	966
15-40183-1	801
15-41545-1	794
15-41545-2	794
15-41545-3	794
15-41627-1	821
15-41627-2	821
15-41764	822
15-41764-1	822
15-41856-1	795
15-43098-1	819
15-43251-1*	747

To Be Replaced	ECG Replacement
15-43251-2	747
15-43312-1	820
15-43636	1231
15-43636-1	1231
15-43703	738
15-43703-1	738
15-43706-1	4093B
15-45141-1	4011B
15-45184-1	4024B
15-45185-1	4016B
15-45186-1	987*
15-45300	712
15-71420-1	722
15-81994-1	912
15-100001	116
15-100002	116
15-100003	178MP
15-100004	116
15-108001	178MP
15-108002	113
15-108003	116
15-108004	116
15-108005	116
15-108006	116
15-108007	120
15-108008	177
15-108008(Midland)	506
15-108009	113
15-108010	116
15-108011	116
15-108012	118
15-108013	506
15-108014	120
15-108015	116(3)
15-108016	116
15-108017	118
15-108020	116
15-108021	116
15-108022	116
15-108025	177
15-108026	506
15-108030	502
15-108035	506
15-108036	116
15-108037	116
15-108038	120
15-108040	506
15-108041	506
15-108042	177
15-108043	506
15-108044	506
15-108045	502
15-108046	125
15-108047	506
15-108048	506
15-108049	116
15-108050	116
15-123065	152
15-123100	283
15-123101	177
15-123102	506
15-123103	506
15-123104	503
15-123105	116
15-123106	138A
15-123230	165
15-123231	503
15-123242	506
15-123243	125
15-123296	177
15-123297	506
15-123298	503
15-123299	116
15-123300	116
15-123301	138A
15-123302	186A
15-123303	187A
15-160007	5071A
15-377700-1	792
15-392007-1	808
15-505753-2	911
15-505753-3	911D
15-714201	722
15-2221011	102A
15-3015129-1	797
15-3015130-1	740A
15-22210111	102A
15-22210131	160
15-22210300	160
15-22210921	160
15-22211021	160
15-22211200	102A
15-22211328	102A
15-22211921	160
15-22214400	160
15-22214411	160
15-22214435	160
15-22214821	160
15-22214831	160
15-22216500	102A
15-22216600	160
15-22217400	160
15-22223720	123A
15B2	116
15B6	5806
15B8	5808
15B10	5809
15C05	5800
15C1	5801
15C2	5802
15C2	5802
15C2D	5802
15C4	5804
15C6	5806
15C8	5808

To Be Replaced	ECG Replacement
15C10	5809
15E6	5806
15E7	5808
15E8	5808
15E10	5809
15F6	5806
15F8	5808
15F10	5809
15H3P	5854
15H3PN	5855
15J2	116
15J2F	116
15N1	116
15N2(Power)	5874
15N3(Power)	5874
15P2	177
15P2(Power)	5874
15P3(Power)	5874
15Q3	5944
15S05	5800
15S1	5801
15S2	5802
15S4	5804
15S6	5806
15X364	123A
15X380	306
15X383	295
15Z3	159
15Z6AF	5069A
15Z6F	5069A
15Z10B	5125A
16-2	116
16-19(Symphonic)	129
16-20 (Symphonic)	128
16-736	108
16-21426	161
16-147191229	123A
16-171191368	123A
16-207190405	102A
16-501190016	125
16A1	103
16A1 (Fleetwood)	123A
16A2	103
16A2 (Fleetwood)	123A
16A545-7	123A
16A787	102
16A1938	123A
16A(IC)	1045
16B-3A82	121MP
16C025B	5520
16C025C	5520
16C050B	5521
16C050C	5521
16C4	116
16C-4	116
16C4B1P	166
16C-4P	166
16C10B	5522
16C10C	5522
16C15B	5523
16C15C	5523
16C20B	5524
16C20C	5524
16C25B	5525
16C25C	5525
16C30B	5526
16C30C	5526
16C35B	5527
16C35C	5527
16C40B	5527
16C40C	5527
16C45B	5528
16C45C	5528
16C50B	5528
16C50C	5528
16C60B	5529
16C60C	5529
16C70B	5530
16C70C	5530
16C80B	5531
16C80C	5531
16C(IC)	1045
16E1330(GE)	123A
16F5	5892
16F10	5894
16F15	5896
16F20	5896
16F30	5898
16F40	5900
16F50	5902
16F60	5904
16F80	5908
16F100	5910
16G2	123A
16G5	116
16G27	133
16G28	177
16G28A	177
16GN	107
16(IC)	1045
16J1	108
16J2	108
16J2(Diode)	116
16J2F	116
16K1	108
16K2	108
16K3	108
16L2	108
16L3	108
16L5	108
16L22	108
16L23	108
16L42	123A
16L43	123A
16L44	123A

To Be Replaced	ECG Replacement
16L62	123A
16L63	123A
16L64	107
16P2	178
16P2881	172A
16P3367	172A
16RC2A	5540
16RC5A	5541
16RC10A	5542
16RC15A	5543
16RC20A	5543
16RC25A	5544
16RC30A	5544
16RC40A	5545
16RC50A	5546
16RC60	5547
16RC60A	5547
16U1(Heath Kit)	123A
16X1	123A
16X2	123A
16X10	116
16X39	177
16Z4	142A
16Z6	135A
16Z6A	135A
16Z6AF	135A
16Z6F	135A
17-1	151A
17-10	116
17-50(Fisher)	130
17-410	116
17-443	128
17-451	123A
17-457	123A
17-458	129
17-459	159
17-459A	159
17-1179-045	1087
17-1179-051	1006
17-12054-1	9930
17-12056-1	9932
17-12057-1	9933
17-12058-1	9946
17-12064-1	9962
17-12065-1	9945
17-12089-1	9951
17-12096-1	909
17-12097-1	910
17A4422-1	121
17C/D368(IC)	1047
17C(IC)	1047
17P2	177
17-RLB	234
17S08	6358
17S08R	6359
17S10	6358
17S10R	6359
17TB1	5522
17TB2	5524
17TB3	5526
17TB4	5527
17TB5	5528
17TB6	5529
17TB7	5530
17TB8	5531
17Z6	136A
17Z6A	136A
17Z6AF	136A
17Z6F	136A
18-085001	116
18-085002	142A
18-22-17	116
18-148A	123A
18-177-1	175
18-198-2	124
18-605	912
18-605-R0	912
18-606	724
18-3539-1	128
18A8-1	160
18A8-1-12	160
18A8-1-127	160
18A8-1L	160
18A8-1L8	160
18AA-1-82	121
18DB2A	167
18DB2A-C	167
18DB4A	168
18DB4A-C	168
18DB6A	169
18DB6A-C	170
18DB8A	170
18DB8A-C	170
18DB10A	170
18DB10A-C	170
18J2	125
18J2F	125
18P2	116
18P-2A82	102A
18RC2	5540
18RC5	5541
18RC10	5542
18RC20	5543
18RC25	5544
18RC30	5544
18RC40	5545
18RC50	5546
18RC60	5547
18Z6	137A
18Z6A	137A
18Z6AF	137A
18Z6F	137A
19-00-3485	175
19-020-001	126
19-020-002	126

To Be Replaced	ECG Replacement
19-020-003	102A
19-020-005	126
19-020-007	102A
19-020-015	102
19-020-019	213
19-020-030	104
19-020-031	160
19-020-031	160
19-020-032	160
19-020-033	100
19-020-034	102A
19-020-035	102A
19-020-036	102A
19-020-037	108
19-020-038	128
19-020-043	123A
19-020-043A	123A
19-020-044	161
19-020-045	175
19-020-046	154
19-020-048	161
19-020-050	128/401
19-020-052	108
19-020-056	152
19-020-058	123A
19-020-066	152
19-020-067	123A
19-020-070	229
19-020-071	107
19-020-072	311
19-020-073	123A
19-020-074	123A
19-020-075	128
19-020-076	195A
19-020-077	195A
19-020-078	237
19-020-079	703A
19-020-44	108
19-020-100	129
19-020-101	186
19-020-102	187
19-020-111	349
19-020-112	351
19-020-114	290
19-020-115	312
19-040-002	116
19-040-003	116
19-040-004	116
19-050-004	109
19-080-001	177
19-080-002	116
19-080-008	177
19-080-009	109
19-080-014	5010A
19-090-007	5063A
19-090-008	5074A
19-090-008A	140A
19-090-014	5010A
19-090-015	134A
19-05589	7470
19-09234	941
19-09973-0	7401
19-09981-0	923
19-020071	123A
19-076001	1003
19-085005	109
19-085010	116
19-085017	138A
19-085018	109
19-085022	116
19-1	159
19-2	159
19-2-02616	123A
19-3	159
19-10	159
19-20	159
19-30	159
19-120-001	177
19-130-001	781
19-130-001(Diode)	177
19-130-004	74145
19-130-005	7490
19-3349	128
19-3415	158
19-3416	158
19-3692	128
19-3934-643	128
19-3935-641	190
19-10298-00	941M
19-10415-00	923D
19-10476-0	74H01
19-15840	128
19-19420	108
19-100001	125
19A13-4339	1115
19A11552b-P1	137A
19A11644P1	708
19A11695-P2	339
19A115024-P4	116
19A115024-P6	125
19A115056-P1	127
19A115061-P1	123A
19A115061-P2	123A
19A115077-P1	102
19A115077-P2	102
19A115086-P1	109
19A115087-P1	126
19A115089	5874
19A115094-P1	105
19A115098	126
19A115098-P1	126
19A115099-P1	126
19A115100-P1	116
19A115101	121
19A115101-P1	121

To Be Replaced	ECG Replacement
19A115102-P1	123A
19A115103-P1	101
19A115108-P1	123A
19A115108-P2	123A
19A115123-2	123A
19A115123-P1	123A
19A115123-P2	123A
19A115129-2	103
19A115129-P1	103
19A115140-P1	160
19A115140-P2	160
19A115142-P1	123A
19A115142-P2	123A
19A115145-P3	116
19A115145-P4	116
19A115157-1	123A
19A115167-2	123A
19A115178-P1	159
19A115178-P2	159
19A115180-2	129
19A115184-P1	121
19A115192-P1	160
19A115192-P2	160
19A115200-P1	152
19A115201-P1	101
19A115201-P2	101
19A115208	100
19A115208-P1	100
19A115208-P2	100
19A115238-2	128
19A115238-P1	128
19A115245-P1	123A
19A115245-P2	123A
19A115249-1	108
19A115249P1	316
19A115250	519
19A115253-P1	123A
19A115253-P2	123A
19A115267P1	121
19A115268	121
19A115281-P1	102
19A115300	128
19A115300-1	128
19A115300-2	128
19A115300-P1	186
19A115300-P2	186
19A115300-P3	186
19A115301-P1	100
19A115301-P2	100
19A115304-2	128
19A115315-P1	123A
19A115315-P2	123A
19A115322	112
19A115322-P1	112
19A115328-1	123A
19A115330	123A
19A115341P1	121
19A115342-1	108
19A115342-2	161
19A115342-P1	123A
19A115342P1	316
19A115342-P2	123A
19A115359-P1	123A
19A115359-P2	123A
19A115361-P1	121
19A115362-P1	123A
19A115362-P2	123A
19A115371-1	177
19A115376	121
19A115385-P1	121
19A115410-P1	123A
19A115410-P2	123A
19A115440-1	108
19A115440-2	108
19A115441-1	108
19A115458-P1	159
19A115458-P2	159
19A115460-P1	5545
19A115487-P1	105
19A115527	175
19A115527-1	175
19A115527-P1	175
19A115528-P3	139A
19A115531-P1	127
19A115540-P1	105
19A115546-P1	101
19A115546-P2	101
19A115552P1	123A
19A115552P2	123A
19A115561	121
19A115561-1	121
19A115562P2	159
19A115569-P2	116
19A115591P1	123A
19A115591P2	123A
19A115623-P1	124
19A115623-P2	124
19A115628-P1	160
19A115628-P2	160
19A115635-1	160
19A115636-P1	160
19A115653-P1	159
19A115653-P2	159
19A115654-P1	159
19A115654-P2	159
19A115661P1	519
19A115665-P1	160
19A115665-P2	160
19A115666-1	108
19A115673-P1	101
19A115673-P2	101
19A115674-P1	102A
19A115674-P2	102A
19A115683-P1	5545
19A115683-P2	5545

@, * — See special notes on inside back cover.

To Be Replaced	ECG Replacement
19A115688-P1	159
19A115688-P2	159
19A115706-1	159
19A115706-2	159
19A115706-P1	159
19A115706-P2	159
19A115720-1	123A
19A115720-2	123A
19A115728-1	123A
19A115728-2	123A
19A115747-P1	5545
19A115768-1	159
19A115768-2	159
19A115768-3	159
19A115768-P1	159
19A115768-P2	159
19A115779P1	159
19A115783-1	124
19A115786	123A
19A115786A	123A
19A115810P1	311
19A115817P1	124
19A115818	181
19A115852P1	159
19A115889-P1	128
19A115889-P2	128
19A115889-P3	128
19A115910P1	123A
19A115913-1	9930
19A115913-2	9951
19A115913-3	9932
19A115913-4	9933
19A115913-10	9093
19A115913-19	9946
19A115913-20	9962
19A115913P2	9951
19A115913P14	9936
19A115925-1	108
19A115944P1	123A
19A115944P2	123A
19A115976P1	129
19A116081	177
19A116118-1	152
19A116118-2	152
19A116118-i	152
19A116118P1	152
19A116118P2	152
19A116180-7	7440
19A116180-8	7450
19A116180-11	7454
19A116180-18	7486
19A116180-22	7405
19A116180-24	7490
19A116180-25	7491
19A116180-27	7492
19A116180-29	7495
19A116180P1	7400
19A116180P2	7401
19A116180P3	7402
19A116180P4	7410
19A116180P5	7420
19A116180P7	7440
19A116180P8	7450
19A116180P11	7454
19A116180-P13	7470
19A116180P15	7473
19A116180P16	7474
19A116180P18	7486
19A116180P20	7404
19A116223P1	159
19A116297P3	941
19A116297P3-9	941
19A116297P3-10	941
19A116375	153
19A116375P1	153
19A116408-1	159
19A116445	709
19A115549P1	909
19A116623	912
19A116631P1	123A
19A116753P1	181
19A116755P1	123A
19A116761P1	130
19A116774-P1	123A
19A116796-1	704
19A116797-1	710
19A116839-P3	339
19A116841P1	923
19A116865	123A
19A123160-1	108
19A123160-2	108
19A126265-1	160
19A126265-2	160
19A126813	130
19A126813A	130
19A126826-P2	181
19A129181-P1	349
19A129181-P2	350
19A129181-P3	351
19A129181-P4	320
19A129207P1	123A
19A134060-P1	349
19A134060-P2	350
19A134104-P1	339
19A134164-P1	363
19A134164-P2	363
19A134171-P1	367
19A134171-P2	367
19A134239	366
19AR2	116
19AR3	109
19AR4	114
19AR4-1	114
19AR5	116

To Be Replaced	ECG Replacement
19AR6-1	103A
19AR6-2	103A
19AR6-3	103A
19AR7-1	102A
19AR7-2	102A
19AR8	110MP
19AR11	116
19AR12	116
19AR13-1	160
19AR13-2	160
19AR13-3	160
19AR13-4	160
19AR14-1	102A
19AR14-2	102A
19AR16-1	102A
19AR16-2	102A
19AR17	116
19AR18	160
19AR19-1	102A
19AR19-2	102A
19AR20	123A
19AR21	106(4)
19AR22	110MP
19AR24	160
19AR25	102A
19AR26	102A
19AR27	102A
19AR29	113
19AR29-1	113
19AR30	118
19AR31	121
19AR32	102A
19AR34	116
19AR35	124
19AR36	123A
19B200011-P1	5874
19B200011-P2	5874
19B200011-P3	5874
19B200011-P4	5874
19B200011-P5	116
19B200054-P1	102A
19B200061-P1	102A
19B200061-P2	102A
19B200061-P3	102A
19B200061-P4	102A
19B200063-P1	102A
19B200065-P1	101
19B200065-P2	101
19B200210-P1	102A
19B200210-P2	102A
19B200210-P3	102A
19B200248-P1	5455
19B200248-P2	5455
19B200248-P3	5455
19B200249-P1	177
19B200249-P2	177
19B200379-P1	139A
19B2000129-P1	100
19B2000130-P1	160
19B2000130-P2	160
19B2000132-P1	102A
19B2000132-P2	102A
19B2000132-P3	102A
19B2000132-P4	102A
19-C	119
19C300II5-1	128
19C300073-P1	102
19C300073-P2	102
19C300073-P3	102
19C300073-P4	102
19C300073-P5	102
19C300073-P6	102
19C300074-P2	102
19C300076-P1	116
19C300076-P2	116
19C300076-P3	116
19C300076-P4	116
19C300076-P5	116
19C300076-P6	116
19C300113-P1	121
19C300114-P1	123A
19C300114P1	123A
19C300114-P2	123A
19C300114P2	123A
19C300114P3	123A
19C300115-1	128
19C300115-P1	128
19C300128-P1	102
19C300128-P2	102
19C300128-P3	102
19C300128-P4	102
19C300128-P5	102
19C300128-P6	102
19C300128-P7	102
19C300128-P8	102
19C300138-P4	102
19C300138-P8	102
19C300216-P1	160
19C300216-P2	160
19E15-1	9905
19E18-1	9904
19E19-2	9903
19L-4A82	102A
19P1	177
19P2	116
19Q820	519
19QC17	107
19QC19	234
19Z6AF	5071A
19Z6F	5071A
20-00229-001	108
20-00444-001	108
20-0352	904
20-1	108
20-22-08	116

To Be Replaced	ECG Replacement
20-1111-002	130
20-1111-003	130
20-1680-143	116
20-1680-174	128
20-1680-175	109
20-1680-189	158
20-161002	177
20A0007	102A
20A0009	102A
20A0015	102A
20A0017	121
20A0041	121
20A0042	121
20A0053	123A
20A0054	116
20A0055	128
20A0059	189
20A0060	189
20A0073	123A
20A0074	121
20A0075	129
20A0076	128
20A1	5801
20A2	5802
20A3	5803
20A4	5804
20A5	5805
20A6	5806
20A8	5808
20A9M	109
20A10	5809
20A11	177
20A13	177
20A70	109
20A-70	109
20A79	109
20A90	109
20A-90	109
20A-90H	109
20A90LF	109
20A-90M	109
20A90M	109
20A90MLF	110
20A90MP	110(6)
20A90P	110
20A90Z	110
20A10849	123A
20AS	116
20B1M	703A
20B2M	703A
20B3AH	703A
20B409	135A
20B410	135A
20BS	116
20C	116
20C1	5801
20C1(IC)	1075A
20C2	5802
20C2(IC)	1075A
20C3	5803
20C4	5804
20C5	5805
20C6	5806
20C9	5808
20C10	5808
20C71	102A
20C72	102A
20C(IC)	1075A
20E-54-5411	5695
20E1114	358
20F1	5834
20F5	5912
20F10	5914
20F20	5916
20F30	5918
20F40	5920
20F60	5924
20F80	5928
20F100	5932
20FR5	5913
20FR10	5915
20FR20	5917
20FR30	5919
20FR40	5921
20FR50	5923
20FR60	5925
20FR80	5929
20FR100	5933
20H	116
20H3	5874
20H3P	5854
20H3PN	5855
20HA3	5994
20J2	5874
20J3P	5874
20JH3	6026
20-JLM	159
20K	116
20M	116
20M10	6022
20M20	6026
20M30	6030
20M40	6034
20M50	6038
20M60	6040
20M80	6042
20M100	6044
20MC	160
20N1	116
20N2	5874
20N3	5874
20P1S	5542
20P2	5874
20P2S	5543
20P3	5874

To Be Replaced	ECG Replacement
20P3S	5544
20P4S	5545
20P5S	5546
20P6S	5547
20Q3	5897
20R2	5980
20R3	5990
20S3	5990
20S4	5990
20S5	5834
20TB1	5542
20TB2	5543
20TB3	5544
20TB4	5545
20TB5	5546
20TB6	5547
20V-HG	102A
20Z6AF	138A
20Z6F	138A
21-0101	192
21-1	123A
21-1AA(Magnavox)	6402
21-1L	123A
21/3	114
21/33.92	114
21-28	121
21-32	126
21-33	126
21-34	102
21-35	124
21-36	102
21-37	102
21-606-0001	177
21-606-0001-00H	177
21-608-4148-006	519
21-609-3595-009	177
21-810	116
21-810-2	116
21A001-000	116(3)
21A002	113
21A002-000	113
21A004-000	506
21A005	120
21A005-000	102A
21A006-000	116
21A007-000	116
21A008-000	116
21A008-001	116
21A008-003	116
21A008-008	177
21A008-016	120
21A009	177
21A009-000	109
21A009-002	110,109
21A009-008	177
21A009-009	177
21A015-001	102A
21A015-002	155
21A015-003	131
21A015-004	108
21A015-005	103A
21A015-006	102A
21A015-008	159
21A015-008A	159
21A015-009	159
21A015-009A	159
21A015-011	159
21A015-011A	159
21A015-012	159
21A015-012A	159
21A015-013	123A
21A015-014	108
21A015-016	108
21A015-018	128
21A015-019	128
21A015-020	123A
21A015-021	155
21A015-022	131
21A015-025	159
21A015-026	128
21A015-027	123A
21A020-001	116
21A020-005	109
21A020-006	116
21A037-001	5021A
21A037-003	142A
21A037-006	5100A
21A037-008	142A
21A037 -009	5079A
21A037-012	5072A
21A037-016	5096A
21A037-017	5076A
21A037-018	143A
21A037-020	5074A
21A037-021	5098A
21A038-000	102A
21A039-000	102A
21A040-000	102A
21A040-001	109
21A040-003	108
21A040-004	108
21A040-005	102A
21A040-007	108
21A040-010	108
21A040-014	102A
21A040-015	132
21A040-016	108
21A040-017	108
21A040-019	108
21A040-020	123A
21A040-021	102A
21A040-022	102A
21A040-023	107
21A040-024	107
21A040-025	107

To Be Replaced	ECG Replacement
21A040-031	126
21A040-032	123A
21A040-033	123A
21A040-033A	123A
21A040-034	123A
21A040-035	176
21A040-036	158
21A040-037	123A
21A040-045	229
21A040-046	233
21A040-047	233
21A040-049	129
21A040-050	129
21A040-051	128
21A040-052	152
21A040-053	229
21A040-054	107
21A040-055	107
21A040-056	123A
21A040-057	102A
21A040-058	102A
21A040-059	159
21A040-060	158
21A040-061	158
21A040-063	107
21A040-064	199
21A040-065	199
21A040-066	199
21A040-067	199
21A040-068	1075A
21A040-077	123A
21A040-078	123A
21A040-079	102A
21A040-081	158
21A040-082	199
21A040-083	199
21A040-091	229
21A040-092	123A
21A040-36	102A
21A040-37	123A
21A040-44	116
21A040-54	229
21A045-000	160
21A048-000	160
21A049-000	160
21A050-000	160
21A050-001	160
21A050-004	108
21A051-000	100
21A053-000	102A
21A054-000	102A
21A055-000	102A
21A062-000	106
21A064-000	121
21A074-000	102A
21A079-000	116
21A097-000	121
21A2	113
21A3	118
21A4	119
21A6	116
21A7	116
21A11-002	601
21A11-062	199
21A12-062	199
21A101-001	706
21A101-002	711
21A101-002(Blanker)	177
21A101-004	1047
21A101-005	1046
21A101-006	1089*
21A101-007	1048
21A101-008	1077
21A101-009	1076
21A101-010	1091*
21A101-011	1084
21A101-012	1086A
21A101-013	1034
21A101-014	749
21A101-015	747
21A101-016	715
21A101-017	714
21A101-018	1050
21A101-1	706
21A101-2	711
21A102-001	116
21A102-002	170
21A103-006	110
21A103-007	116
21A103-010	109
21A103-011	109
21A103-012	125
21A103-013	125
21A103-015	125
21A103-016	110MP
21A103-017	109
21A103-018	116
21A103-019	109
21A103-021	116
21A103-022	109
21A103-044	116
21A103-045	5074A
21A103-046	109
21A103-048	110
21A103-049	138A
21A103-050	116
21A103-052	109
21A103-055	109
21A103-058	116
21A103-064	139A
21A103-065	177
21A103-070	116
21A103-104	125
21A105-001	108
21A105-004	128

To Be Replaced	ECG Replacement
21A105-006	128
21A108-001	177
21A108-002	139A
21A108-003	177
21A108-004	177
21A109-001	109
21A109-002	109
21A109-003	110
21A109-022	109
21A110-001	116
21A110-002	116
21A110-003	116
21A110-004	125
21A110-005	506
21A110-006	116
21A110-007	116
21A110-008	506
21A110-009	506
21A110-010	116
21A110-012	125
21A110-013	116
21A110-014	506
21A110-071	525
21A110-072	116
21A110-12	116
21A111-001	177
21A111-002	601
21A112-001	159
21A112-002	129
21A112-003	159
21A112-004	193
21A112-006	161
21A112-007	107
21A112-008	313
21A112-010	161
21A112-013	123A
21A112-015	123A
21A112-017	123A
21A112-018	123A
21A112-019	199
21A112-020	123A
21A112-023	164
21A112-025	124
21A112-029	124
21A112-031	162
21A112-033	124
21A112-036	165
21A112-045	199
21A112-046	199
21A112-047	159
21A112-048	187
21A112-049	186
21A112-050	123A
21A112-058	199
21A112-062	123A
21A112-063	123A
21A112-065	159
21A112-070	198
21A112-071	198
21A112-074	194
21A112-075	159
21A112-084	229
21A112-085	123A
21A112-086	108
21A112-087	108
21A112-088	123A
21A112-089	123A
21A112-090	123A
21A112-091	123A
21A112-092	123A
21A112-093	159
21A112-094	153
21A112-095	152
21A112-096	124
21A112-098	198
21A112-099	198
21A112-100	159
21A112-101	123A
21A112-102	123A
21A112-103	165
21A112-104	123A
21A112-107	162
21A112-124	283
21A112-125	292
21A112-126	292
21A113-002	132
21A118-008	198
21A118-029	152
21A118-030	229
21A118-031	289
21A118-032	193
21A118-033	297
21A118-034	283
21A118-049	152
21A119-005	109
21A119-008	143A
21A119-009	116
21A119-011	5071A
21A119-013	116
21A119-029	502
21A119-030	125
21A119-040	605
21A119-041	136A
21A119-046	116
21A119-068	506
21A119-073	5072A
21A120-001	749
21A120-002	1109
21A120-008	712
21A120-009	1258
21A120-016	7400
21A120-017	7408
21A120-018	74154
21A120-045	1257
21A122-062	199

To Be Replaced	ECG Replacement
21A404-066	199
21A500	120
21A500-000	120
21-B1	718
21B1M	718
21B1Z	718
21B2Z	718
21B-14	116
21B-17	116
21K60	109
21M006	126
21M007	100
21M022	159
21M025	187
21M026	187
21M027	193
21M028	187
21M084	123A
21M085	123A
21M086	123A
21M087	199
21M091	199
21M093	229
21M094	107
21M095	199
21M096	199
21M099	229
21M37	199
21M60	123A
21M122	123A
21M123	123A
21M124	199
21M125	123A
21M137	199
21M138	199
21M139	123A
21M140	107
21M146	123A
21M149	123A
21M150	123A
21M151	107
21M152	107
21M153	107
21M154	107
21M160	199
21M161	199
21M170	199
21M174	199
21M178	107
21M179	107
21M180	186
21M181	186
21M182	107
21M183	186
21M184	186
21M185	128
21M186	123A
21M188	107
21M192	192
21M193	192
21M196	132
21M200	123A
21M205	123A
21M214	139A
21M224	132
21M248	116
21M283	116
21M286	186
21M288	109
21M288(Diode)	109
21M288(Transistor)	123A
21M289	110
21M302	116
21M307	139A
21M312	116
21M315	116
21M317	116
21M323	109
21M325	110
21M330	177
21M345	187
21M355	159
21M366	123A
21M367	186
21M369	186
21M386	116
21M386(pwr)	116
21M387	128
21M395	187
21M408	199
21M412	132
21M415	177
21M416	116
21M417	116
21M419	116
21M432	109
21M432(REG)	143A
21M433	116
21M434	116
21M435	116
21M436	116
21M437	116
21M443	187
21M446	199
21M448	128
21M455	128
21M459	193
21M465	185
21M466	184
21M469	116
21M476	108
21M481	108
21M485	1142
21M487	116
21M488	123A

@, * — See special notes on inside back cover.

To Be Replaced	ECG Replacement
21M493	140A
21M506	799
21M519	116
21M520	123A
21M532	1006
21M534	132
21M541	297
21M545	116
21M550	199
21M556	186
21M562	177
21M562(Diode)	177
21M562(Transistor)	123A
21M563	123A
21M568	110
21M577	229
21M578	123A
21M579	123A
21M581	159
21M582	1124
21M584	139A
21M585	139A
21M586	178MP
21M588	722
21M589	812
21M590	116
21M594	109
21M599	722
21M600	722
21M603	199
21M604	234
21M605	123A
21M606	192
21M623	199
21M028	187
21R05S	5980
21R1S	5982
21R2S	5986
21R3S	5988
21R4S	5990
21R5S	5992
21R6S	5994
21R8S	5998
21R10S	6002
21RC10	5522
21RC20	5524
21RC30	5526
21RC40	5527
21RC50	5528
21RC60	5529
21RC80	5531
21Z6AF	5072A
21Z6F	5072A
22-001001	123A
22-001002	108
22-001003	108
22-001004	108
22-001005	108
22-001006	123A
22-001007	123A
22-001008	175
22-001009	175
22-001010	159
22-002001	131
22-002006	102
22-002007	102A
22-002008	131
22-002009	131
22-004003	109
22-004004	125
22-1	107
22-1-63	109
22-1-123	177
22-1-143	109
22-1-145	116
22-1-147	138A
22-1-151	613
22-1-152	138A
22-1-222	519
22A001-17	116
22B1B	739
22C(IC)	1078
22E89	176
22R2	5916
22R22	5986
22RC2	5540
22RC5	5541
22RC10	5542
22RC15	5543
22RC20	5543
22RC25	5544
22RC30	5544
22RC40	5545
22RC50	5546
22RC60	5547
22Z6AF	139A
22Z6F	139A
23	123A
23-0003	116
23-0004	116
23-001R03A10	519
23-001R03AA10	519
23-0010	116
23-0017	116
23-0018	125
23-1	159
23-2	159
23-3	159
23-10	159
23-20	159
23-30	159
23-5009	121
23-5014	158
23-5017	102A
23-5020	123A

To Be Replaced	ECG Replacement
23-5021	123A
23-5022	123A
23-5023	123A
23-5024	123A
23-5025	123A
23-5026	123A
23-5027	123A
23-5029	123A
23-5031	175
23-5032	131&155
23-5033	123A
23-5034	176
23-5035	130
23-5037	128/401
23-5038	130
23-5039	128
23-5041	130
23-5042	121
23-5044	172A
23-5045	159
23-5048	103A&158
23-5051	128/401
23-5052	123A
23B-210-025	121
23B-210-230-2	127
23B114044	123A
23B114053	128
23B114054	128
23B-210067-001	358A
23B-210067-002	358A
23B210679-1	118
23BSC101	116
23C	1046
23C025B	5540
23C025C	5540
23C050B	5541
23C050C	5541
23C10B	5542
23C10C	5542
23C15B	5543
23C15C	5543
23C20B	5543
23C20C	5543
23C25B	5544
23C25C	5544
23C30B	5544
23C30C	5544
23C35B	5545
23C35C	5545
23C40B	5545
23C40C	5545
23C45B	5546
23C45C	5546
23C50B	5546
23C50C	5546
23C60B	5547
23C60C	5547
23C(IC)	1046
23E001-1	123A
23J2	177
23-LLB	159
23-PT274-120	161
23-PT274-121	123A
23-PT274-122	159
23-PT274-123	161
23-PT274-125	177
23-PT275-121	161
23-PT275-122	108
23-PT275-124	112
23-PT283-122	161
23-PT283-124	161
23-PT283-125	177
23-PT284-122	160
23-PT284-123	160
23TB1	5542
23TB2	5543
23TB3	5544
23TB4	5545
23TB5	5546
23TB6	5547
23Z6AF	140A
23Z6F	140A
24-000451	123A
24-000452	128
24-000457	123A
24-000653-1	123A
24-0003714-1	123A
24-002	123A
24-001326	199
24-001327-1	123A
24-001354	199
24-198	116
24-602-25	123A
24-3564	108
24-28201	177
24A	123A
24A1	108
24-AWH	159
24B	123A
24B1	123A
24B1AH	731
24B1B	731
24B1Z	731
24DP1	116
24E-001	177
24E-002	112
24E-002-C	112
24E-006	177
24E-022	112
24J2	177
24M125	199
24MW11	100
24MW15	102
24MW16	102
24MW27	102A

To Be Replaced	ECG Replacement
24MW28	102A
24MW29	102
24MW34	102A
24MW43	102
24MW44	160
24MW55	160
24MW59	160
24MW60	102
24MW61	126
24MW69	102
24MW70	102
24MW74	126
24MW77	100
24MW78	102
24MW83	102
24MW84	102
24MW87	109
24MW107	102
24MW111	102A
24MW115	102
24MW116	102
24MW119	123A
24MW122	110
24MW130	103
24MW132	102
24MW152	126
24MW157	160
24MW175	117
24MW178	102A
24MW179	102A
24MW185	102A
24MW187	102A
24MW192	166
24MW196	117
24MW197	116
24MW199	109
24MW205	126
24MW207	138A
24MW208	116(2)
24MW227	116(2)
24MW241	116(2)
24MW243	109
24MW244	110
24MW246	125
24MW256	158
24MW263	102
24MW267	116
24MW268	116
24MW269	116
24MW271	126
24MW287	107
24MW303	126
24MW331	139A
24MW333	123A
24MW351	160
24MW352	126
24MW353	126
24MW361	107
24MW368	126
24MW370	102A
24MW372	123A
24MW384	102A
24MW441	102A
24MW454	123A
24MW458	123A
24MW460	123A
24MW461	123A
24MW535	107
24MW593	107
24MW594	107
24MW595	107
24MW596	107
24MW597	107
24MW598	102A
24MW599	102A
24MW600	102A
24MW601	102A
24MW602	125
24MW603	109
24MW605	125
24MW607	115
24MW608	102A
24MW609	123A
24MW613	102A
24MW614	102A
24MW615	102A
24MW618	131MP
24MW619	116
24MW653	107
24MW654	108
24MW655	123A
24MW 656	107
24MW656	107
24MW657	108
24MW658	123A
24MW659	123A
24MW660	128
24MW661	159
24MW662	152
24MW663	128
24MW665	110
24MW667	177
24MW669	116
24MW670	5073A
24MW671	116
24MW673	107
24MW674	128
24MW675	108
24MW676	123A
24MW677	128
24MW700	107
24MW714	128
24MW721	116
24MW723	132
24MW724	108

To Be Replaced	ECG Replacement
24MW725	108
24MW727	129
24MW736	132
24MW737	107
24MW738	107
24MW739	108
24MW740	123A
24MW741	158
24MW742	5071A
24MW743	140A
24MW744	177
24MW760	123A
24MW768	116
24MW771	109
24MW772	116
24MW773	123A
24MW774	123A
24MW775	123A
24MW776	123A
24MW777	102A
24MW778	152
24MW779	125
24MW780	102A
24MW781	102A
24MW782	102A
24MW783	158
24MW785	177(2)
24MW789	102A
24MW790	123A
24MW793	107
24MW795	123A
24MW796	123A
24MW797	123A
24MW799	102A
24MW801	123A
24MW805	107
24MW807	123A
24MW808	123A
24MW809	123A
24MW812	107
24MW813	107
24MW814	107
24MW815	107
24MW816	126
24MW817	123A
24MW818	123A
24MW819	158
24MW820	110
24MW823	123A
24MW824	102A
24MW825	177
24MW826	199
24MW827	108
24MW828	176
24MW829	125
24MW851	116
24MW852	108
24MW853	102A
24MW854	123A
24MW855	123A
24MW856	102A
24MW857	102A
24MW858	177
24MW860	109
24MW861	177
24MW862	116
24MW863	107
24MW864	125
24MW865	108
24MW867	116
24MW871	116
24MW874	123A
24MW892	102A
24MW893	102A
24MW894	177
24MW899	123A
24MW924	125
24MW953	107
24MW954	123A
24MW956	177
24MW957	161
24MW958	161
24MW961	123A
24MW964	199
24MW965	199
24MW967	109
24MW973	158
24MW974	117
24MW975	117
24MW976	159
24MW977	152
24MW978	184
24MW988	123A
24MW989	132
24MW990	199
24MW991	126
24MW992	123A
24MW994	131
24MW995	116
24MW996	1021
24MW997	1024
24MW998	139A
24MW1022	199
24MW1023	123A
24MW1024	123A
24MW1025	199
24MW1028	1003
24MW1029	109
24MW1030	109
24MW1031	159
24MW1038	108
24MW1040	158
24MW1043	109
24MW1049	159
24MW1051	109

To Be Replaced	ECG Replacement
24MW1057	107
24MW1058	107
24MW1059	123A
24MW1060	199
24MW1061	159
24MW1065	140A
24MW1066	116
24MW1067	109
24MW1068	123A
24MW1069	123A
24MW1071	116
24MW1081	107
24MW1082	108
24MW1083	102A
24MW1084	102A
24MW1089	123A
24MW1092	109
24MW1096	123A
24MW1106	107
24MW1107	5069A
24MW1108	116
24MW1109	177
24MW1110	1032
24MW1113	116
24MW1115	102A
24MW1116	102A&103A
24MW1118	156
24MW1120	123A
24MW1122	222
24MW1123	116
24MW1124	113
24MW1125	140A
24MW1141	123A
24MW1143	184
24MW1144	116
24MW1146	116
24MW1147	123A
24MW1152	192
24MW1161	128
24MW1162	116
24R2	5990
24(Sharp)	5082A
24T-002	108
24T-009	199
24T-011-001	161
24T-011-003	107
24T011-008	108
24T-011-008	108
24T-011-011	159
24T011-012	161
24T-011-013	229
24T-013-003	161
24T-013-005	108
24T016	107
24T-016	107
24T-016-001	108
24T-016-005	108
24T-016-010	107
24T-016-013	108
24T-016-015	108
24T-016-016	108
24T021	161
24T-026-001	133
24T013003	107
24T013005	107
24T016001	107
24T016005	107
24TB1	5522
24TB2	5524
24TB3	5526
24TB4	5527
24TB5	5528
24TB6	5529
24TB7	5530
24TB8	5531
24Z6AF	5074A
24Z6F	5074A
25-000453	159
25-000456-1	234
25-000462	159
25-0060-4	123A
25-001328	106
25-5	116
25-7	125(4)
25-37833-2	909D
25-100015	108
25A	108
25A1	108
25A2	123A
25A1262-005	108
25A1273-001	123A
25A1281-001	108
25AM624	108
25B	108
25B1	108
25B-1	108
25B1C	730
25B1T	730
25B2	229
25B2C	730
25B2T	730
25B378	102A
25C05	5980
25C05R	5981
25C10	5982
25C10R	5983
25C15	5986
25C15R	5987
25C20	5986
25C30	5988
25C30R	5989
25C40	5990
25C40R	5991
25C50	5992
25C50R	5993

To Be Replaced	ECG Replacement
25C60	5994
25C60R	5995
25C70R	5999
25C80	5998
25C80R	5999
25C90	6002
25C90R	6003
25C100	6002
25C100R	6003
25C206	108
25CS58LGBM	123A
25D10	125
25F-B1F	167
25G5	6020
25G5R	6021
25G10	6022
25G10R	6023
25G20	6026
25G20R	6027
25G40	6034
25G40R	6035
25G60	6040
25G80	6042
25G100	6044
25GC12	5990
25H2	123A
25H5	6050
25H5A	6050
25H10	6050
25H10A	6050
25H15	6054
25H15A	6054
25H20A	6054
25H25	6058
25H25A	6058
25H30	6058
25H30A	6058
25H40	6060
25H40A	6060
25H50	6064
25H50A	6064
25H60	6064
25H60A	6064
25H70	6068
25H70A	6068
25H80	6068
25H80A	6068
25H90	6072
25H90A	6072
25H100	6072
25H100A	6072
25HB5	6020
25HB10	6022
25HB15	6026
25HB20	6026
25HB25	6030
25HB30	6030
25HB35	6034
25HB40	6034
25HB50	6038
25HB60	6040
25J2	177
25JC12	5994
25K10	125
25LC12	5998
25-MEF	159
25N15	145A
25N27	146A
25NC12	6002
25R	108
25T-002	107
25T1	102
25TB1	5542
25TB2	5543
25TB3	5544
25TB4	5545
25TB5	5546
25TB6	5547
25Z6	142A
25Z6A	142A
25Z6AF	142A
25Z6F	142A
26-16162-1	358
26-4701508	125
26D00505	116
26J2	177
26MW613	102A
26OP17703	199
26OP22802	176A
26P031402	297
26P33108	164
26R2	5994
26R2S	5994
26T1	102
26TB1	5522
26TB2	5524
26TB3	5526
26TB4	5527
26TB5	5528
26TB6	5529
26TB7	5530
26TB8	5531
26Z6AF	143A
26Z6F	143A
27-226	113
27A10446-101-11	9099
27A10489-101-11	199
27A10533	159
27C1(IC)	1124
27-C226	113
27C(IC)	1124
27D127	198
27J2	177
27P1	109
27T401	100

To Be Replaced	ECG Replacement
27T402	100
27T403	102
27T404	102
27T405	102
27T406	121
27T407	105
27T408	101
27T409	123
27T410	103
27T411	123
27T412	126
27Z6	144A
27Z6A	144A
27Z6AF	144A
27Z6F	144A
28-6-01	116
28-7-01	116
28-13-01	116
28-14-01	116
28-15-01	116
28-15-02	116
28-18-01	116(4)
28-19-01	116
28-20-01	116
28-20-02	116
28-21-01	116
28-22-01	116
28-22-02	116
28-22-03	116
28-22-04	116
28-22-05	116
28-22-06	116
28-22-07	116
28-22-10	116
28-22-11	156
28-22-12	116
28-22-13	506
28-22-14	116
28-22-15	116
28 22 15	116
28-22-16	156
28-22-17	116
28-22-18	156
28-22-19	119
28-22-20	156
28-22-21	116
28 22 21	116
28-22-21	116
28-22-22	506
28-23-01	118
28-24-01	119
28-25-01	116
28-26-01	120
28-29-01	116
28-31-00	513
28-31-01	505
28 31 02	513
28-32-0X	500A
28-35-01	522
28-65-01	116
28-819-172	107
28-254566-1	116
28J2	116
28P1	109
28R2	5998
28R25	5998
28Z6	145A
28Z6A	145A
28Z6AF	145A
28Z6F	145A
29-505	109
29A4	129
29B1	790
29B1B	790
29B1Z	790
29B17	790
29C2	1089*
29C-2(IC)	1089*
29C2(IC)	1089*
29C3(IC)	1089*
29C(IC)	1089*
29CZ	1089
29-HCL	159
29P1	134A
29S	138A
29V008M01	100
29V0038H03	102
29V011H01	100
29V012H01	100
29V069C02	163A
29V12H01	102A
30-004-001	179
30-005072	223
30-090	184
30-1,001	107
30-1,002	123A
30-1,003	123A
30-1,004	229
30-1,007	152
30-1,008	1003
30-1,010	519
30-1,011	109
30-1,012	112
30-1,013	506
30-1,015	107
30-1,016	199
30-1,017	1140
30-1,018	7400
30-1,019	7473
30-1,021	5071A
30-1,022	109
30-1,023	132
30-1,025	229
30-8057-13	178MP

@, * — See special notes on inside back cover.

To Be Replaced	ECG Replacement
30AS	116
30B5	116
30BS	116
30C	116
30C(IC)	1049
30D1	125
30D2	125
30F1	5836
30H	116
30H3	5874
30H3P	5856
30H3PN	5857
30J2	5874
30J3P	5876
30JH3	6058
30K	116
30M	116
30N2	5874
30N3	5874
30P1	109
30P2	5874
30P3	5874
30Q3	5946
30R1	5801
30R3	5804
30R6	5806
30R8	156
30R10	156
30R25	6002
30S05	5800
30S1	5801
30S2	5805
30S3	5803
30S4	5804
30S5	5805
30S6	5806
30S8	5808
30S10	5809
30V-H6	102A
30V-HG	102A
31-0001	160
31-0002	160
31-0003	160
31-0004	160
31-0005	126
31-0006	102A
31-0007	123A
31-0008	102A
31-0009	123A
31-0010	175
31-0012	199
31-0013	199
31-0015	160
31-0016	160
31-0017	158
31-0018	102A
31-0025	102A
31-0026	102A
31-0033	102A
31-0035	158
31-0039	109
31-0041	126
31-0042	126
31-0048	107
31-0049	107
31-0050	107
31-0051	108
31-0052	199
31-0053	102A
31-0054	107
31-0055	193
31-0065	126
31-0066	186
31-0068	123A
31-0069	123A
31-0070	102A
31-0075	158
31-0080	123A
31-0081	123A
31-0082	123A
31-0083	128
31-0084	123A
31-0085	123A
31-0097	108
31-0098	107
31-0099	199
31-011	177
31-020	HiDiv-1
31-021	HiDiv-2
31-025	102
31-058	123A
31-093	177
31-0100	199
31-0101	192
31-0102	193
31-0103	108
31-0104	123A
31-0105	158
31-0106	123A
31-0107	102A
31-0108	126
31-0115	123A
31-0116	123A
31-0123	126
31-0124	126
31-0132	126
31-0134	126
31-0135	126
31-0139	126
31-0141	160
31-0148	102A
31-0150	160
31-0153	102A
31-0161	160
31-0163	160

To Be Replaced	ECG Replacement
31-0165	160
31-0166	160
31-0168	160
31-0170	160
31-0171	160
31-0172	102A
31-0175	127
31-0177	123A
31-0178	126
31-0180	160
31-0181	160
31-0182	158
31-0183	158
31-0184	126
31-0187	123
31-0188	102A
31-0189	102A
31-0190	126
31-0191	126
31-0192	121
31-0196	121
31-0205	102A
31-0206	107
31-0217	126
31-0228	126
31-0229	158
31-0230	123A
31-0239	123A
31-0240	121
31-0241	160
31-0241-1	160
31-0242	108
31-0243	108
31-0246	123A
31-0247	102
31-0253	100
31-1	123A
31-16	123A
31-194	125
31-195	116
31-1012	941M
31-2104733	160
31-21004900	160
31-21007744	160
31-21024033	160
31-21024044	160
31-21047111	160
31-21050611	160
31-21050622	160
31-22005400	102A
31A(IC)	1048
31C	1048
31C1(IC)	1048
31C(IC)	1048
31R2	5982
31Z6	5005A
31Z6A	5005A
32-0000	109
32-0001	109
32-0002	109
32-0003	109
32-0004	109
32-0005	139A
32-0007	110
32-0008	109
32-0013	109
32-0022	177
32-0023	109
32-0025	5072A
32-0026	116
32-0029	109
32-0036	109
32-0037	116
32-0038	116
32-0039	109,110
32-0042	116
32-0045	116
32-0046	116
32-0047	116
32-0048	117
32-0049	140A
32-0050	116
32-0057	177
32-0059	116
32-0060	116
32-0061	116
32-0062	113
32-0063	177
32-12066-10	160
32-13843-2	123A
32-16591	104MP
32-16599	121MP
32-18537	109
32-18539	110
32-20738	123A
32-20739	159
32-23555-1	704
32-23555-2	704
32-23555-3	704
32-23555-4	704
32-29778-1	500A
32-29778-2	500A
32-29778-3	500A
32-29778-4	500A
32-33057-1	500A
32-33057-2	522
32-33057-3	500A
32-33057-4	500A
32-33057-5	500A
32-33057-6	500A
32-33094-1	522
32-33094-2	522
32-33094-3	522
32-33094-4	522
32-33094-5	522

To Be Replaced	ECG Replacement
32-33094-6	522
32-35894-1	500A
32-35894-2	522
32-35894-3	522
32-35894-4	522
32-35894-5	500A
32-35894-6	522
32-35894-7	522
32-39091-1	523
32-39091-2	523
32-39091-3	526A
32-39091-4	523
32-39091-5	523
32-39091-6	523
32-39091-7	526A
32-39091-8	526A
32-39091-9	523
32-39704-1	522
32-39704-2	522
32-107261-1	910
32-805483-1	910
32-805483-2	910
32-807071-1	911
32-807072-1	909
32C(IC)	1050
32E64	129
32R2	5986
32Z6	134A
32Z6A	134A
33-0002	116
33-0006	116
33-0023	116
33-0024	116
33-0025	138A
33-0026	116
33-0029	116
33-0030	116
33-0031	116(3)
33-0039	105
33-00234-B	175
33-00243	124
33-00706A	123A
33-00742	129
33-016	159
33-048	128
33-050	175
33-052	130
33-070	123A
33-071	123A
33-084	123A
33-086	159
33-090	184
33-096	195
33-0706	123A
33-4-3	358
33-4-3A	358
33-7-3	358
33-8-3	358
33-108	223
33-1000-00	102
33-1001-00	102
33-1002-00	131MP
33-1004-00	121
33-1009-01	102A
33-1019-00	102A
33-1020-00	102A
33-1021-00	102A
33-1390-1	HiDiv-1
33-1390-2	HiDiv-1
33-1390-3	HiDiv-1
33-1407-1	524
33G59019	113
33G59024	116
33G59113	119
33G59121	116
33G59122	116
33H50	108
33K59	312
33R	5082A
33R-09	139A
33Z6	134A
33Z6A	134A
34-0012	358
34-0037-102	177
34-6	160
34-34-6015-43	123A
34-119	160
34-143-12	159
34-194	941M
34-220	160
34-221	160
34-298	160
34-1000	130
34-1000A	130
34-1001	219
34-1002	152
34-1003	153
34-1006	157
34-1007	234
34-1008	234
34-1009	199
34-1010	123A
34-1011	106
34-1013	159
34-1017	194
34-1019	199
34-1022	159
34-1026	175
34-1027	218
34-1028	130
34-1028A	130
34-1029	219
34-1041	726
34-2001-1	109
34-3015-28	159

To Be Replaced	ECG Replacement
34-3015-46	107
34-3015-47	107
34-3015-49	107
34-6000-3	160
34-6000-4	102A
34-6000-5	102A
34-6000-6	102A
34-6000-7	102A
34-6000-8	102A
34-6000-9	160
34-6000-10	160
34-6000-11	160
34-6000-12	160
34-6000-13	160
34-6000-14	160
34-6000-15	102A
34-6000-16	160
34-6000-17	160
34-6000-18	160
34-6000-19	160
34-6000-20	160
34-6000-25	160
34-6000-26	160
34-6000-27	102A
34-6000-28	102A
34-6000-29	102A
34-6000-30	102A
34-6000-31	102A
34-6000-32	102A
34-6000-33	102A
34-6000-34	102A
34-6000-58	160
34-6000-59	160
34-6000-60	160
34-6000-61	160
34-6000-62	160
34-6000-63	160
34-6000-64	123A
34-6000-65	160
34-6000-66	160
34-6000-67	160
34-6000-68	160
34-6000-69	123A
34-6000-70	123A
34-6000-71	123A
34-6000-72	233
34-6000-76	160
34-6000-77	160
34-6000-78	160
34-6000-79	160
34-6000-80	160
34-6000-81	160
34-6000-82	160
34-6000-83	102A
34-6000-84	102A
34-6000-85	102A
34-6001-1	104
34-6001-3	108
34-6001-5	123A
34-6001-6	108
34-6001-7	102A
34-6001-8	102A
34-6001-9	102A
34-6001-10	102A
34-6001-11	102A
34-6001-12	102A
34-6001-13	102A
34-6001-14	102A
34-6001-15	159
34-6001-16	102A
34-6001-17	102A
34-6001-18	102A
34-6001-19	102A
34-6001-20	102A
34-6001-21	102A
34-6001-22	102A
34-6001-23	102A
34-6001-26	102A
34-6001-28	158(2)
34-6001-29	102A
34-6001-30	102A
34-6001-31	102A
34-6001-33	102A
34-6001-34	123A
34-6001-41	102A
34-6001-42	102A
34-6001-43	102A
34-6001-44	102A
34-6001-47	102A
34-6001-48	123A
34-6001-49	123A
34-6001-50	128
34-6001-51	128
34-6001-51MR-12	128
34-6001-52	123A
34-6001-53	123A
34-6001-54	123A
34-6001-55	123A
34-6001-56	123A
34-6001-57	123A
34-6001-58	123A
34-6001-60	123A
34-6001-61	123A
34-6001-62	123A
34-6001-63	123A
34-6001-64	191
34-6001-65	154
34-6001-66	158
34-6001-69	123A
34-6001-70	123A
34-6001-71	123
34-6001-72	102A
34-6001-73	123A
34-6001-74	123A
34-6001-76	102A

To Be Replaced	ECG Replacement
34-6001-77	123A
34-6001-78	128
34-6001-79	121
34-6001-80	128
34-6001-82	128
34-6001-83	128
34-6001-84	103A
34-6001-85	128
34-6001-86	129
34-6002-1	175
34-6002-2	121
34-6002-3	121
34-6002-4	121
34-6002-5	121
34-6002-6	121
34-6002-7	121
34-6002-8	121
34-6002-9	121
34-6002-10	121
34-6002-11	121
34-6002-13	121
34-6002-14	121
34-6002-17	104
34-6002-18	104
34-6002-18A	104
34-6002-19	121
34-6002-20	104
34-6002-21	124
34-6002-22	104
34-6002-22A	104
34-6002-24	127
34-6002-25	174
34-6002-26	124
34-6002-28	175
34-6002-29	175
34-6002-31	127
34-6002-32	130
34-6002-32A	130
34-6002-33	179
34-6002-34	121
34-6002-35	181
34-6002-36	180
34-6002-37	181
34-6002-38	180
34-6002-41	186
34-6002-42	187
34-6002-43	196
34-6002-46	124
34-6002-47	182
34-6002-48	183
34-6002-49	127
34-6002-50	152
34-6002-52	152
34-6002-56	152
34-6002-57	153
34-6002-58	163A
34-6002-59	165
34-6002-61	162
34-6002-62	124
34-6002-63	165
34-6002-64	165
34-6005-1	160
34-6005-2	175
34-6005-3	175
34-6007-1	123A
34-6007-2	123A
34-6007-3	123A
34-6008	102A
34-6009	102A
34-6010	128&129(CP)
34-6015-1	123A
34-6015-2	123A
34-6015-3	123A
34-6015-4	123A
34-6015-5	123A
34-6015-6	123A
34-6015-7	123A
34-6015-8	107
34-6015-9	123A
34-6015-10	123A
34-6015-11	123A
34-6015-12	123A
34-6015-13	123A
34-6015-14	123A
34-6015-15	319
34-6015-16	319
34-6015-17	319
34-6015-18	161
34-6015-19	161
34-6015-20	161
34-6015-21	123A
34-6015-22	161
34-6015-23	128
34-6015-24	128
34-6015-25	128
34-6015-26	159
34-6015-27	229
34-6015-28	191
34-6015-29	319
34-6015-30	128
34-6015-31	161
34-6015-32	160
34-6015-33	160
34-6015-34	160
34-6015-35	160
34-6015-36	160
34-6015-37	233
34-6015-38	233
34-6015-39	160
34-6015-40	160
34-6015-41	123A
34-6015-42	159
34-6015-42A	123A
34-6015-43A	123A

To Be Replaced	ECG Replacement
34-6015-44	123A
34-6015-44A	102A
34-6015-46	229
34-6015-47	229
34-6015-48	229
34-6015-49	108
34-6015-50	107
34-6015-51	128
34-6015-52	229
34-6015-54	123A
34-6015-59	154
34-6015-60	123A
34-6015-61	233
34-6015-62	233
34-6015-63	123A
34-6015-64	171
34-6015-80	123A
34-6016-2	123A
34-6016-3	123A
34-6016-4	123A
34-6016-7	123A
34-6016-8	123A
34-6016-11	102A
34-6016-12	129
34-6016-14	123A
34-6016-15	159
34-6016-15A	159
34-6016-16	123A
34-6016-17	108
34-6016-18	123A
34-6016-19	123A
34-6016-22	128
34-6016-23	129
34-6016-23A	129
34-6016-24	123A
34-6016-25	123A
34-6016-26	123A
34-6016-27	128
34-6016-28	160
34-6016-29	160
34-6016-30	128
34-6016-31	210
34-6016-32	159
34-6016-32A	129
34-6016-33	128
34-6016-41	194
34-6016-47	159
34-6016-49	123A
34-6016-49A	123A
34-6016-50	102A
34-6016-51	192
34-6016-53	210
34-6016-54	211
34-6016-56	194
34-6016-59	193
34-6016-59(NPN)	192
34-6016-59(PNP)	193
34-6016-60	159
34-6016-62	210
34-6016-63	123A
34-6016-64	234
34-6016-65	187
34-6017-3	172A
34-6018-2	133
34-8001-43	126
34-8002-1	109
34-8002-2	109
34-8002-3	109
34-8002-4	109
34-8002-5	109
34-8002-6	109
34-8002-7	109
34-8003	116
34-8022-1	109
34-8022-2	109
34-8022-3	109
34-8022-4	109
34-8022-5	109
34-8022-6	109
34-8022-6(Philco)	110
34-8022-7	109
34-8022-77	109
34-8027	112
34-8028	358
34-8034	113
34-8034-1	116
34-8034-2	116
34-8034-3	116
34-8034-4	116
34-8034-4(Crystal)	358
34-8034-7	113
34-8036-1	116
34-8036-2	116
34-8036-3	116
34-8036-4	116
34-8037	113
34-8037-1	113
34-8037-2	113
34-8037-3	113
34-8037-4	113
34-8040-2	116
34-8042-1	116
34-8042-2	116
34-8042-3	116
34-8043-4	358
34-8047-1	178MP
34-8048-1	116
34-8048-2	116
34-8048-5	116
34-8050-2	116
34-8050-7	116
34-8050-10	125
34-8050-14	116
34-8051	116
34-8053-2	118

To Be Replaced	ECG Replacement
34-8053-3	118
34-8053-4	118
34-8053-7	118
34-8054-1	116
34-8054-2	116
34-8054-4	116
34-8054-5	116
34-8054-6	116
34-8054-6(Philco)	136A
34-8054-7	116
34-8054-8	506
34-8054-10	116
34-8054-11	116
34-8054-12	116
34-8054-13	116
34-8054-14	116
34-8054-15	116
34-8054-16	507
34-8054-17	515
34-8054-18	116
34-8054-23	116
34-8054-24	506
34-8054-25	506
34-8054-27	116
34-8055-2	116(3)
34-8055-3	116
34-8056-1	119
34-8056-13(Philco)	178MP
34-8057-3	110
34-8057-4	5076A
34-8057-5	177
34-8057-6	177
34-8057-7	135A
34-8057-8	178MP
34-8057-9	138A
34-8057-9(Philco)	139A
34-8057-10	5071A
34-8057-11	116
34-8057-12	145A
34-8057-13	177(2)
34-8057-14	142A
34-8057-15	119
34-8057-16	138A
34-8057-18	116
34-8057-22	506
34-8057-23	109
34-8057-24	506
34-8057-25	109
34-8057-26	109
34-8057-27	138A
34-8057-27(Philco)	139A
34-8057-28	116
34-8057-29	109
34-8057-30	109
34-8057-31	5080A
34-8057-32	136A
34-8057-33	142A
34-8057-34	178MP
34-8057-37	135A
34-8057-38	147A
34-8057-40	177
34-8057-41	142A
34-8057-42	5014A
34-8057-43	5027A
34-8057-44	5029A
34-8057-45	116
34-8057-46	5144A
34-8057-47	5133A
34-8057-49	5014A
34-8057-52	109
34-8057-53	142A
34-8057-55	5007A
34-8058	120
34-8058-1	120
34-8058-2	120
34-8058-7	120
34-8059-1	230
34-8059-2	231
34-8059-6	5457
34-8059-7	5457
34-8061-1	502
34-8062-1	505
34-8062-4	504
34-9037-1	113
34-601703	172A
34E31	108
34H31	108
34M14Z	144A
34M14Z5	144A
34M14Z10	144A
34P1AA	159
34P4	177
34R2	5990
34Z14D5	144A
34Z14D10	144A
34Z140	144A
35-003-001	116
35-010-04	519
35-020-21	128
35-1000	125
35-1003	125
35-1004	116
35-1005	116
35-1006	5892
35-1008	5802
35-1014	177
35-1029	125
35-210631-01	5635
35-210631-02	5635
35-39306001	123A
35-39306002	123A
35-39306003	123A
35-ALD	159
35B611	167
35BL611	167

To Be Replaced	ECG Replacement
35C05	5980
35C05R	5981
35C10	5982
35C10R	5983
35C15	5986
35C15R	5987
35C20	5986
35C20R	5987
35C30	5988
35C30R	5989
35C40	5990
35C40R	5991
35C50	5992
35C50R	5993
35C60	5994
35C60R	5995
35C70	5998
35C70R	5999
35C70(Rect.)	5998
35C80	5998
35C80R	5999
35C90	6002
35C90R	6003
35C100	6002
35C100R	6003
35H5	5980
35H10	5982
35H10R	5983
35H20	5986
35H30	5988
35H40	5990
35HR20	5987
35HR30	5989
35HR40	5991
35P1	102
35P2	102
35P2C	102
35P4	177
35(RCA)	159
35T1	102
35Z6	5009A
35Z6A	5009A
36-0041	1142
36-0083	1140
36-1	107
36-6015-46	107
36-6016-59	193
36-6343	142A
36D-32	177
36E004-1	109
36J003-1	102A
36P1	102
36P1C	102
36P1F	102
36P2F	102
36P3	102
36P3A	102
36P3C	102
36P4	102
36P4C	102
36P5	102
36P5C	102
36P6C	102A
36P7	102A
36P7C	102A
36P7T	102A
36P8	102A
36P8C	102A
36R2	5994
36R2S	5994
36(Sears)	160
36T1	102
36Z6	135A
36Z6A	135A
37-8-01	358
37-8-1	358
37-193MP	199
37-210	5697
37-19201	234
37-21401	199
37H01	5192A
37H02	5200A
37H03	5232A
37H04	5174AK
37H05	5175AK
37H06	5188A
37H07	5224A
37H08	5186A
37H09	5229A
37T1	126
37Z6	136A
37Z6A	136A
38	116
38-8057-6	519
38-11016	502
38A64C	138A
38A4148-000	501A
38A4148-001	501A
38P1	121
38P1C	121
38R2	5998
38R2S	5998
38T1	102
38Z6	137A
38Z6A	137A
39-02	116
39A9	102
39A69-2	177
39P1	121
39P1C	121
39R-26	146A
39(Sharp)	142A
39T1	102
39Z6	5014A
39Z6A	5014A

To Be Replaced	ECG Replacement
40-0068-2	128
40-065-19-001	9961
40-065-19-002	9963
40-065-19-003	9949
40-065-19-004	9937
40-065-19-005	9944
40-065-19-006	9932
40-065-19-007	9948
40-065-19-008	9933
40-065-19-012	74H40
40-065-19-013	9946
40-065-19-014	9097
40-065-19-016	7440
40-065-19-027	7475
40-065-19-029	7486
40-065-19-030	7495
40-0502	117
40-09297	519
40-09437	234
40-09952	234
40-601	102
40-11253	234
40-86513-3	123A
40-102430	124
40A50	5980
40A100	5982
40A150	5986
40A200	5986
40A300	5988
40A400	5990
40A500	5992
40A600	5994
40AS	116
40B5	116
40BS	116
40C	116
40C2PW8V1SP	106
40D1547	160
40D6665A03	116
40H	116
40H3	5874
40H3P	5858
40H3PN	5859
40HF5	5980
40HF10	5982
40HF15	5986
40HF20	5986
40HF30	5988
40HF40	5990
40HF50	5992
40HF60	5994
40HF70	5998
40HF80	5998
40HF90	6002
40HF100	6002
40HFR5	5981
40HFR10	5983
40HFR15	5987
40HFR20	5987
40HFR30	5989
40HFR40	5991
40HFR50	5993
40HFR60	5995
40HFR70	5999
40HFR80	5999
40HFR90	6003
40HFR100	6003
40J2	116
40J3P	5878
40JH3	6060
40JH3R	6061
40JZ	116
40K	116
40KR	116
40M	116
40N1	116
40NJ	116
40P1	102
40P2	102
40P2(Power)	5874
40P3	5874
40Q3	5900
40Q4	5900
40R2S	6002
40R3	5990
40S3	5990
40S5	5838
40Y3P	116
41-001	120
41-032	116(4)
41-0318	130
41-0318A	130
41-0499	123A
41-0500	129
41-0500A	129
41-0606	198
41-0609	198
41-0905	142A
41-0906	5066A
41-0909	175
41B581014	128
41B581144-P001	175
41C-402	1095
41C-407	1003
41C-409	1110
41C(IC)	1093
41-J2	116
41N	161
41N1	108
41N2	108
41N2A	108
41N2AA	108
41N2B	108
41N2M	161
41N3	108

To Be Replaced	ECG Replacement
41Z6	5016A
41Z6A	5016A
42-051	125
42-1	1112
42-2	1111
42-9029-31B	199
42-9029-31L	199
42-9029-31M	123A
42-9029-31P	199
42-9029-31Q	199
42-9029-31R	123A
42-9029-31V	123A
42-9029-40C	123A
42-9029-40F	234
42-9029-40L	123A
42-9029-40T	128
42-9029-40U	129
42-9029-40W	234
42-9029-40X	159
42-9029-40Y	123A
42-9029-60A	123A
42-9029-60B	234
42-9029-60C	123A
42-9029-60D	199
42-9029-60Q	159
42-9029-60W	129
42-9029-70C	123A
42-9029-70D	159
42-9029-70E	159
42-9029-70F	123A
42-9029-70G	129
42-9029-70J	128
42-9029-70K	128
42-9029-70P	123A
42-9029-70Q	234
42-14027	116
42-16599	121
42-17143	102
42-17443	116
42-17443A	116
42-17444	123
42-18109	176
42-18111	123
42-18310	124
42-19642	128
42-19643	129
42-19644	123
42-19645	125
42-19670	123
42-19671	102A
42-19681	110
42-19682	160
42-19683	108
42-19792	160
42-19840	123A
42-19862	103A
42-19862A	158
42-19863	102A
42-19863A	102A
42-19864	102A
42-19864A	102A
42-19865	116
42-19917	143A
42-20222	102A
42-20738	123
42-20739	129
42-20960	175
42-20961	130
42-20961A	130
42-21232	129
42-21233	128
42-21234	123A
42-21362	110
42-21400	116
42-21401	161
42-21402	161
42-21403	126
42-21404	103A
42-21405	158
42-21406	102A
42-21407	123
42-21408	116
42-21443	121MP
42-21866	116
42-22008	159
42-22008A	159
42-22009	172A
42-22158	123A
42-22532	107
42-22533	123A
42-22534	102A
42-22535	158
42-22537	109
42-22538	177
42-22539(Diode)	109
42-22539(Transistor)	106
42-22540	119
42-22755	109
42-22778	160
42-22779	160
42-22780	160
42-22781	160
42-22784	160
42-22785	108
42-22786	123A
42-22787	123A
42-22809	123A
42-22810	159
42-22810A	159
42-22811	123A
42-22812	123A
42-22834	121MP
42-22835	116
42-22847	123A
42-23348	123A

To Be Replaced	ECG Replacement
42-23349	123A
42-23350	116
42-23350A	116
42-23459	152
42-23541	159
42-23541A	159
42-23542	123A
42-23622	102A
42-23960	107
42-23960P	107
42-23961	107
42-23961P	107
42-23962	107
42-23962P	107
42-23963	107
42-23963P	107
42-23964	123A
42-23964P	123A
42-23965	126
42-23965P	160
42-23966	123A
42-23966P	123A
42-23967	158
42-23967P	158
42-23968	121
42-23968P	121
42-23969	109
42-23972	110
42-23975	116
42-23977	5809
42-24263	172A
42-24387	177
42-27202	116
42-27277	199
42-27278	116
42-27529	229
42-27530	229
42-27531	229
42-27532	229
42-27534	199
42-27535	199
42-27536	159
42-27537	289
42-27538	153
42-27539	152
42-27541	142A
42-27542	601
42-27543	109
42-28056	123A
42-28057	158
42-28058	116
42-28199	109
42-28201	177
42-28202	116
42-28203	108
42-28204	108
42-28205	123A
42-28206	108
42-28207	123A
42-28208	159
42-28210	123A
42-28211	159
42-28212	184
42-28213	185
42-30092	199
42A11	116
42A14	109
42A23	116
42B2	116
42B16	116
42J2	116
42R2	5877
42X25	116
42X32	116
42X210	103
42X230	102A
42X233	102
42X244	116
42X244B	116
42X245	116
42X245B	116
42X309	102
42X310	103
42X311	102
42Z6	139A
42-Z6A	139A
43-022861	108
43-023190	181
43-023212	123A
43-023221	123A
43-023222	129
43-023223	128
43-023843	130
43-023844	126
43-025763	108
43-025764	108
43-025765	108
43-025766	123A
43-025767	108
43-025834	131
43-0203845	129
43-540012	116
43A111449	160
43A113534	177
43A114346-1	519
43A114346-P1	519
43A114832-3	519
43A126932	128
43A128340-1	123A
43A128340-2	123A
43A128340-3	123A
43A128340-4	123A
43A128342-1	123A
43A128342-2	123A
43A128342-3	123A

To Be Replaced	ECG Replacement
43A128342-4	123A
43A128342-5	123A
43A128342-6	123A
43A128342-7	123A
43A144188-5	5675
43A145291-1	159
43A145291-2	159
43A162445P1	199
43A162455-1	128
43A165137P1	130
43A165137P3	130
43A165137P4	130
43A167207P1	159
43A167207P2	159
43A167229-01	177
43A167851	123A
43A167885-P1	181
43A167885-P2	181
43A167885-P3	181
43A167886P4	218
43A168016P1	123A
43A168064-1	159
43A168064P1	159
43A168135-1	9932
43A168135-2	9930
43A168135-3	9933
43A168135-4	9946
43A168135-6	9936
43A168135-7	9944
43A168135-8	9945
43A168135-9	9093
43A168135-10	9962
43A168440	912
43A168440-1	912
43A168481	941D
43A168481P1	941D
43A175989P1	519
43A176002	159
43A180002-P1	123A
43A180002-P2	123A
43A212040-1	909
43A212040-2	909D
43A212042P1	910
43A212042P2	910D
43A212042-P2	910D
43A212067	130
43A212090P1	199
43A223006P1	74H00
43A223007	7401
43A223008	74H01
43A223009	7402
43A223012	74H10
43A223015	7430
43A223017	74H40
43A223018	74H40
43A223025	7473
43A223026P1	7474
43A223028	7476
43A223029P1	7442
43A223030	7495
43A223031	7496
43A223033P1	7483
43A223034P1	7493A
43A223046-1	923
43A223060-1	128
43B140883-1	123A
43B168450-1	159
43B168495-1	159
43B168566-P1	159
43B168610	123A
43B168613-1	199
43C168567	123A
43C216408P1	74H00
43C216409P1	74H01
43C216410P1	74H04
43C216411P1	74H20
43C216414P1	74H51
43C216447	74193
43C216447P1	74193
43N3	123
43N6	123
43P1	100
43P2	102
43P3	100
43P4	102
43P4C	102
43P6	102
43P6A	102
43P6C	100
43P7	102
43P7A	102
43P7C	102
43-VD-09	128
43X16A567	123
43Z6	140A
43Z6A	140A
44-13	126
44-530	116
44-2020-07800	506
44-44886G01	289
44-82999G03	5517
44A-1A5	121
44A319819-1	128
44A332168-001	941
44A332168-002	941
44A332169-002	941
44A333413	923
44A333463-001	123A
44A333464	159
44A333464-1	159
44A335854-001	912
44A353980-002	175
44A354637-001	175
44A355565-001	130
44A358624-003	129

To Be Replaced	ECG Replacement
44A359497-001	128
44A359497-002	128
44A390202-001	909
44A390202-003	909
44A390205	716
44A390243-001	175
44A390244-001	130
44A390247	123A
44A390248-001	159
44A390249	123A
44A390251	123A
44A390251-001	123A
44A390256-001	159
44A390261	159
44A390264-001	128
44A391505	129
44A391593-001	181
44A393605	941D
44A393611	923D
44A393611-001	923D
44A395909-1	181
44A395986-001	152
44A395992-001	128
44A395992-002	128
44A395994-001	123A
44A397905	159
44A-417014-001	181
44A417031-001	159
44A417032-001	152
44A417033-001	130
44A417034	192
44A417063-001	128
44A417716	130
44A417716-001	130
44A417756-1	197
44A417779-001	941M
44A418041-001	159
44A4417714	181
44A4417714-001	181
44A355565001	130
44B1	738
44B1B	738
44B1Z	738
44B238203-1	159
44B238208-001	175
44B238208-002	175
44B238246	159
44B311097	123A
44B238208002	175
44P1	160
44R2	5858
44R2R	5859
44T-100-112	177
44T-100-113	116
44T-100-114	109
44T-100-116	140A
44T-100-117	136A
44T-100-119	1104
44T-100-120	1155
44T-100-121	229
44T-100-122	312
44T-100-123	199
44T-100-124	295
44T-100-125	235
44T-100-126	123AP
44T-100-127	107
44T-100-128	199
44T-100-129	295
44T-100-130	293
44T-300-91	614
44T-300-92	139A
44T-300-93	140A
44T-300-94	136A
44T-300-96	177
44T-300-97	109
44T-300-99	1104
44T-300-100	964
44t-300-101	829
44T-300-102	1155
44T-300-104	229
44T-300-105	312
44T-300-106	199
44T-300-107	295
44T-300-108	295
44T-300-109	235
44T-300-111	199
44T-300-112	199
44T-300-113	312
45A2FX355	116
45AN4AA	123A
45B1AH	804
45B1D	804
45B1Z	804
45B17	804
45N1	103
45N2	103
45N2A	103A
45N2M	123A
45N3	123A
45N4	123A
45N4M	123A
45NP	108
45X1A502C	102
45X1A520C	102A
45X2	100
46-06311-3	107
46-29-6	712
46-34-3	116
46-67-3	125
46-86-3	116
46-119-3	161
46-163-3	102A
46-423-2	290
46-840-3	102A
46-861-3	112

To Be Replaced	ECG Replacement
46-862-3	160
46-864-3	108
46-865-3	160
46-866-3	160
46-867-3	154
46-868-3	160
46-869-3	102A
46-1340-3	711
46-1343-3	1003
46-1346-3	711
46-1347-3	710
46-1348-3	710
46-1352-3	707
46-1356-3	710
46-1357-3	1004
46-1361-3	712
46-1365-3	749
46-1366-3	748
46-1369-3	1004
46-1370-3	1109
46-1382-3	1108
46-1383-3	1018
46-1384-3	712
46-1393-3	1130
46-1394-3	1131
46-1395-3	1134
46-1396-3	1128
46-1397-3	1132
46-1398-3	1133
46-1399-3	1129
46-5002-1	703A
46-5002-2	703A
46-5002-3	717
46-5002-3@	717
46-5002-3@	769
46-5002-4	703A
46-5002-5	782
46-5002-6	711
46-5002-7	703A
46-5002-8	748
46-5002-8B	748
46-5002-9	718
46-5002-10	706
46-5002-11	790
46-5002-12	714
46-5002-13	715
46-5002-14	739
46-5002-15	712
46-5002-16	780
46-5002-17	746
46-5002-18	747
46-5002-19	779-1 *
46-5002-20	923D
46-5002-21	782
46-5002-23	740A
46-5002-26	712
46-5002-27	779-1 *
46-5002-28	749
46-5002-30	799
46-5002-31	1062
46-5002-33	731
46-6661-2	117
46-8257-3	123A
46-8601-3	116
46-8610-3	102A
46-8611	102A
46-8611-3	102A
46-8611-4	116
46-8612-3	160
46-8613	112
46-8613-3	126
46-8614-3	101
46-8615-3	121
46-8616-3	110MP
46-8617-3	121
46-8619	116(3)
46-8619-3	109
46-8620-3	506
46-8621-3	166
46-8622-3	516
46-8623-3	109
46-8624-3	123A
46-8625	112
46-8625-1	126
46-8625-2	126
46-8625-3	126
46-8625-4	126
46-8625-5	126
46-8625-6	126
46-8629	107
46-8631-3	102A
46-8634-3	121
46-8636-3	126
46-8638-3	121
46-8643	112
46-8643-3	112
46-8643-3	112
46-8644-3	109
46-8646	222
46-8646-3	109
46-8647	107
46-8647-3	116
46-8660-3	102A
46-8661-3	116
46-8664-3	102A
46-8665-3	102A
46-8666-3	102A
46-8668-3	102A
46-8671-3	103A
46-8672-3	161
46-8676-3	177
46-8677-2	108
46-8677-3	316
46-8679-1	102A
46-8679-2	102A

To Be Replaced	ECG Replacement
46-8679-3	102A
46-8680-1	102A
46-8680-2	102A
46-8680-3	102A
46-8681-1	102A
46-8681-2	102A
46-8681-3	158
46-8682-2	123A
46-8682-3	199
46-8687-3	116
46-8688-3	112
46-8689-3	116
46-8694-3	115
46-8695-3	123A
46-8697-3	116
46-13101-3	1080
46-13103-3	1094
46-13104-3	1121
46-13105-3	1122
46-13121-3	712
46-13124-3	738
46-13125-3	1183
46-13131-3	1009
46-13133-3	1200
46-13143-3	1196
46-13145-3	1236
46-16261	116
46-16261-3	116
46-41763C01	5072A
46-61249-3	116
46-61267-3	177
46-61307-3	177
46-67120A13	116
46-80309-3	177
46-81187-3	171
46-84120-3	108
46-85285-3	108
46-86101-3	107
46-86102-3	126
46-86104-3	174
46-86105-3	119
46-86106-3	506
46-86107-3	161
46-86108-3	161
46-86109-3	107
46-86110-3	107
46-86112-2	161
46-86112-3	319
46-86113-3	161
46-86114-3	161
46-86115-3	103A
46-86116-3	117
46-86117-3	161
46-86118-3	161
46-86119-3	161
46-86120-3	107
46-86121-3	123A
46-86122-3	123A
46-86123-3	160
46-86125-3	131
46-86126-3	107
46-86127-3	107
46-86130-3	286
46-86131-3	233
46-86132-3	289
46-86133-3	107
46-86134-3	112
46-86135-3	131
46-86136-3	121
46-86138-3	119
46-86139-3	116
46-86140-3	108
46-86141-3	125
46-86143-3	123A
46-86144-3	123A
46-86145-3	123A
46-86145-3	123A
46-86146-3	125
46-86147-3	125
46-86148	125
46-86148-3	116
46-86149-3	116
46-86150-3	117
46-86151-3	117
46-86152-3	123A
46-86163-3	102A
46-86165-3	102A
46-86168-3	177
46-86169-3	123A
46-86170-3	159
46-86171-3	123A
46-86172-3	107
46-86173-3	154
46-86177-3	116
46-86178-3	178MP
46-86179-3	506
46-86180-3	118
46-86182-3	154
46-86183-3	154
46-86184	177
46-86184-3	177
46-86185-3	115
46-86186-3	177
46-86187-3	177
46-86189-3	175
46-86192-3	123A
46-86194-3	5073A
46-86195-3	102A
46-86196-3	158
46-86198-3	176
46-86199-3	116
46-86200-3	110MP
46-86201-3(Centering)	507
46-86201-3(Power)	116
46-86207-3	107
46-86208-3	108
46-86209-3	107
46-86210-3	154
46-86211-3	103A
46-86212-3	116
46-86213-3	121
46-86214-3	109
46-86220-3	113
46-86224-3	161
46-86225-3	138A
46-86226-3	175
46-86227-3	502
46-86228-3	123A
46-86229-3	159
46-86229-3A	159
46-86230-3	159
46-86231-3	123A
46-86232-3	154
46-86233-3	128
46-86234-3	184
46-86235-3	185
46-86237-3	502
46-86238-3	159
46-86238-3A	159
46-86239-3	107
46-86240-3	229
46-86244-3	108
46-86247-2	123A
46-86247-3	123A
46-86250-3	177
46-86251-3	107
46-86252-3	123A
46-86253-3	109
46-86254-3	178MP
46-86256-1	126
46-86256-2	126
46-86256-3	102A
46-86257-3	123A
46-86261-3	116
46-86262-3	108
46-86264-3	116(2)
46-86265-3	107
46-86266-3	109
46-86267-3	116
46-86268-3	123A
46-86269-3	108
46-86270-3	116(3)
46-86271-3	116
46-86274-3	123A
46-86279-3	502
46-86280-3	506
46-86281-3	506
46-86282-3	506
46-86283-3	159
46-86284-3	139A
46-86285-3	161
46-86286-3	112
46-86288-3	112
46-86289-3	177
46-86290-3	116(3)
46-86291-3	502
46-86292-3	504
46-86293-3	159
46-86294-3	505
46-86295-3	107
46-86296-3	143A
46-86299-3	107
46-86300-3	160
46-86301-3	107
46-86302-3	107
46-86303-3	116(2)
46-86304-3	114
46-86307-3	116
46-86308-3	506
46-86309-3	519
46-86310-3	123A
46-86312-3	113
46-86313-3	503
46-86314-3	108
46-86314-3A	108
46-86316-3	132
46-86317-3	152
46-86318-3	154
46-86319-3	157
46-86320-3	506
46-86321-3	116
46-86322-3	116
46-86323-3	140A
46-86324-3	506
46-86326-3	116
46-86327-3	171
46-86328-3	506
46-86330-3	501A
46-86331-3	506
46-86332-3	113
46-86334-3	504
46-86335-3	152
46-86336-3	113
46-86338-3	177
46-86339-3	116
46-86341-3	144A
46-86343-3	177
46-86344-3	171
46-86345-3	287
46-86346-3	171
46-86347-3	196
46-86348-3	152
46-86349-3	175
46-86349-9	175
46-86350-3	175
46-86351-3	116
46-86352-3	107
46-86353-3	199
46-86354-3	107
46-86355-3	116
46-86357-3	108
46-86358-3	116
46-86360-3	186
46-86364-3	116
46-86365-3	116
46-86371-3	128
46-86373-3	102A
46-86374-3	152
46-86375-3	123A
46-86376-3	123A
46-86377-3	159
46-86378-3	123A
46-86379-3	142A
46-86380-3	178MP
46-86381	128
46-86381-3	128
46-86382-3	506
46-86383-3	116
46-86384-3	124
46-86386-3	124
46-86387-3	124
46-86388-3	130
46-86389-3	165
46-86390-3	164
46-86391-3	506
46-86392-3	5077A
46-86393-2	506
46-86393-3	506
46-86394-3	137A
46-86395-3	506
46-86396-3	221
46-86397-3	108
46-86399-3	159
46-86400-3	152
46-86401-3	144A
46-86402-3	116
46-86403-3	129
46-86404-3	123A
46-86405-3	128
46-86406-3	129
46-86407-3	123A
46-86408-3	123A
46-86409-3	123A
46-86411-3	185
46-86412-3	159
46-86415-3	165
46-86416-3	116
46-86419-3	123A
46-86420-3	116
46-86421-3	139A
46-86422-3	177
46-86424-3	159
46-86425-3	129
46-86426-3	128
46-86427-3	128
46-86428-3	177
46-86429-3	234
46-86430-3	102A
46-86431-3	177
46-86432-3	5096A
46-86433-3	116
46-86434-3	199
46-86435-3	107
46-86436-3	177
46-86437-3	116
46-86438-3	116
46-86439-3	124
46-86440-3	506
46-86442-3	5072A
46-86444-3	513
46-86446-3	124
46-86446-9	124
46-86447-3	5083A
46-86451-3	504
46-86454-3	504
46-86455-3	162
46-86456-3	138A
46-86457-3	137A
46-86458-3	5074A
46-86459-3	196
46-86460-3	5070A
46-86461-3	165
46-86462-3	5074A
46-86463-3	116
46-86464-3	145A
46-86466-3	198
46-86467-3	5096A
46-86469-3	198
46-86474-3	147A
46-86475-3	162
46-86476-3	175
46-86477-3	165
46-86481-3	177
46-86482-2	198
46-86482-3	198
46-86483-3	5072A
46-86483-3(Zener)	5072A
46-86484-3	109
46-86485-3	123A
46-86486-3	165
46-86487-3	5074A
46-86488-3	125
46-86489-3	506
46-86492-3	238
46-86493-3	162
46-86494-3	525
46-86496-3	175
46-86497-3	116
46-86499-3	125
46-86500-3	291
46-86501	137A
46-86501-3	137A
46-86503-3	125
46-86504-3	5074A
46-86505-3	198
46-86506-3	198
46-86507-3	506
46-86508-3	198
46-86509-3	198
46-86511-3	506
46-86511-3 (Tripler)	500A
46-86512-3	123A
46-86513-2	199
46-86513-3	199
46-86514-3	294
46-86515-3	153
46-86516-3	152
46-86517-3	129
46-86518-3	127
46-86519-3	506
46-86520-3	503
46-86521-3	138A
46-86522-3	162
46-86525-1	506
46-86525-3	506
46-86526-3	198
46-86528-3	238
46-86529	5081A
46-86529-3	5081A
46-86530-2	5143A
46-86530-3	5143A
46-86531-3	233
46-86531-3 (Final IF)	233
46-86533-3	196
46-86534-3	292
46-86535-3	199
46-86536-3	199
46-86537-3	290
46-86538-3	319
46-86540-3	297
46-86543-3	199
46-86546-3	290
46-86547-3	504
46-86550-3	293
46-86551-3	290
46-86552-3	198
46-86553-3	125
46-86554-3	5143A
46-86556-3	198
46-86556-3(ZENER)	5071A
46-86557-3	238
46-86558-3	156
46-86559-3	137A
46-86560-3	525
46-86561-3	162
46-86562-3	125
46-86563-3	238
46-86565-3	129
46-86566-3	138A
46-86567-3	198
46-86571-3	6402
46-86572-3	171
46-86574-3	129
46-86583-3	188
46-86584-3	189
46-86589-3	128
46-86591-3	297
46-86807-3	117
46-96434-3	107
46-131013	1080
46-136279P1	909
46-136284-P1	923
46-136284-P2	923D
46-156741P2	941D
46-156741P2	941D
46-203200P39	949
46-500230	799
46-836380-3	177
46-861148-3	116
46-861149-3	506
46-861179-3	506
46-861187-3	177
46AR1	116
46AR2	116
46AR3	116
46AR4	116
46AR5	116
46AR6	116
46AR7	116
46AR8	116
46AR9	116
46AR10	116
46AR11	116
46AR12	116
46AR13	125
46AR15	125
46AR16	125
46AR18	125
46AR21	116
46AR27	116
46AR28	116
46AR29	116
46AR35	116
46AR50	125
46AR52	125
46AR59	125
46AX1	116
46AX2	116
46AX3	116
46AX4	116
46AX5	116
46AX7	116
46AX8	116
46AX9	116
46AX10	116
46AX11	116
46AX12	125
46AX13	125
46AX14	125
46AX16	116
46AX17	116
46AX19	116
46AX21	116
46AX30	116
46AX34	116
46AX52	116
46AX54	116
46AX55	125
46AX56	125
46AX59	125
46AX70	125
46AX82	125
46AX84	125
46AX85	125
46B-3A5	121MP
46BD1	116
46BD2	116
46BD5	116
46BD8	116
46BD9	116
46BD11	116
46BD12	116
46BD14	116
46BD19	116
46BD25	116
46BD27	125
46BD30	125
46BD32	125
46BD33	125
46BD34	125
46BD38	125
46BD39	125
46BD52	125
46BD101	125
46BR5	116
46BR7	116
46BR9	116
46BR10	116
46BR11	116
46BR15	116
46BR17	116
46BR18	125
46BR21	125
46BR27	125
46BR62	125
46BR63	125
46BR64	125
46BR68	125
46BX2	116
46BX3	116
46C(IC)	1077
46R2	5882
46R2R	5863
46R2S	5862
47-2	112
47-2(Bradford)	108
47-4	112
47-86569-3	5463
47-155039	109
47C(IC)	1076
47P1	121
47Z102536-P1	177
48-01†	116
48-01-003	128
48-01-004	108
48-01-005	123A
48-01-007	128
48-01-010	108
48-01-017	107
48-01-027	161
48-01-031	107
48-01-041	350
48-01-043	349
48-01-049	199
48-01-055	341
48-01-064	341
48-01-094	350
48-01-D84	320
48-03-002	159
48-03-041840-2	130
48-03-04046103	128
48-03-04093403	130
48-03-05013702	128
48-03-10111102	129
48-03-10744702	192
48-03-10744802	129
48-05-001	116
48-05-011	177
48-06-001	109
48-0300A01	312
48-03003A01	235
48-03003A02	123A
48-03003A03	123A
48-03003A04	290
48-03003A05	108
48-03003A06	294
48-03003A07	123A
48-03003A09	312
48-03003A10	222
48-03003A11	199
48-03003A12	123AP
48-03005A01	177
48-03005A03	109
48-03005A05	177
48-03005A06	519
48-03005A07	177
48-03005A08	177
48-03005A09	156
48-03073A02	136A
48-03073A04	142A
48-03073A05	144A
48-03073A06	5072A
48-03073A08	142A
48-03073A09	139A
48-03073A10	5000A
48-030073A10	5066A
48-0307310	5066A
48-11-005	140A
48-11-010	5041A
48-15	130
48-35P1	102
48-36P1	102
48-36P3	102
48-39P1	121
48-39P3	102
48-43P3	102
48-43P4	102
48-45N2	199
48-56P1	100
48-57B2	121
48-57B42	121
48-77	358
48-110	113
48-155061	109
48-171-A06	102A
48-191A01	116
48-191A01-9	116
48-191A02	116
48-191A03	116
48-191A04	116
48-191A05	506
48-191A05A	506
48-191A07	116
48-191A07A	116
48-191A08	116
48-191A11	116
48-300-3A10	222
48-843C0A84	311
48-971A04	108
48-971A05	123A
48-971A13	124
48-971-A95	123A
48-971A203	160
48-1005	116
48-1050-SL12318	9930
48-1050-SL12319	9932
48-1050-SL12320	9933
48-1050-SL12321	9936
48-1050-SL12322	9944
48-1050-SL12323	9945
48-1050-SL12324	9946
48-1050-SL12325	9962
48-1050-SL12326	9093
48-1050-SL12327	9099
48-2503P01	611
48-3003A02	293
48-3003A03	107
48-3003A04	106
48-3003A05	123A
48-3003A06	159
48-3003A09	312
48-3003A10	222
48-3003A11	123A
48-3003A12	123A
48-4073P01	116
48-4285P01	235
48-4937	233
48-6712	113
48-6712A02	178MP
48-6712A11	177
48-6720A02	177
48-8213H07	5224A
48-8213H08	5186A
48-8240C06	116
48-8240C07	519
48-8240C08	116
48-8240C09	177
48-8240C10	506
48-8240C11	519
48-8240C12	506
48-8240C13	177
48-8240C14	519
48-8240C15	177
48-8240C16	519
48-8240C17	519
48-8240C18	519
48-8369E62	179
48-8375D02	5455
48-8398E83	160
48-8401A02	154
48-8613	112
48-8613-3	126
48-8619-3	109
48-10001-A01	116
48-10001-A03	116
48-10001-A030-1	116
48-10062A01	116
48-10062A01A	116
48-10062A02	116
48-10062A04	116
48-10062A05	116
48-10062A05A	116
48-10073A01	102A
48-10073A02	102
48-10074A01	102A
48-10074A02	102
48-10074A03	102A
48-10075A01	121MP
48-10075A02	121MP
48-10075A03	121MP
48-10075A04	121MP
48-10075A05	121MP
48-10075A06	121MP
48-10075A07	121MP
48-10075A08	121MP
48-10079A01	160
48-10079A02	160
48-10103A01	121MP
48-10103A02	121MP
48-10103A03	121MP
48-10103A04	121MP
48-10103A05	121MP
48-10103A07	121MP
48-10103A08	121MP
48-10103A09	121MP
48-10103A10	121MP
48-10346A02	507
48-10577A01	177
48-10577A02	177
48-10577A04	125
48-10577A11	178MP
48-10577A13	105
48-10577A13(Diode)	177
48-10641D62	137A
48-12091A	181
48-12443	102A
48-13001A01	124
48-13309X3	152
48-13470	108
48-13481	123A
48-13707	220
48-17162A06	102A
48-17162A10	158
48-17162A13	124
48-17162A17	102A
48-17162A22	102A
48-17271A03	102A
48-21598B01	102A
48-21785J61	311
48-22310K51	311
48-32000	142A
48-34816	177
48-37312	242
48-40004S06	235
48-40004S11	152
48-40118B01	159
48-40118B01A	159
48-40149P01	199
48-40170-G01	199
48-40171G01	123A
48-40172G01	131
48-40212	128
48-40235G01	116
48-40235G02	506
48-40246-G01	199
48-40246G01	199
48-40246G02	123A
48-40247G02	199
48-40382J01	186
48-40383J01	187
48-40458A04	136A
48-40458A06	5072A
48-40458A064	5072A
48-40606J01	123A
48-40606J02	199
48-40607J01	199
48-40732P02	107
48-40734P01	295
48-40738P01	177
48-40739P01	116
48-40764P01	235
48-41266G01	506
48-41508A02	116
48-41763C01	139A
48-41763C02	5072A
48-41763C03	139A
48-41763C1	5072A
48-41768G01	109
48-41784J03	184
48-41784J04	186A
48-41785J03	185
48-41785J04	187A
48-41815J02	107
48-41816J01	107
48-41816J02	107
48-41816J03	229
48-41873J02	139A
48-41873J03	140A
48-41884J03	184
48-42098B01	159
48-42098B01A	159
48-42191G01	107
48-42503P01	612
48-42884P01	295
48-42885P01	235
48-42899J01	177
48-43238G01	159
48-43239G02	289
48-43240G01	152
48-43241G01	153
48-43265G01	116
48-43351A01	102A
48-43351A02	107
48-43351A03	108
48-43351A04	108
48-43351A05	108
48-43354A81	123A
48-43354A82	123A
48-43354A83	158
48-43467J01	312
48-43991J01	108
48-44080J01	601
48-44080J05	139A
48-44125A07	125
48-44578J01	199
48-44580J01	229
48-44580J02	229
48-44883G01	152
48-44884G01	153
48-44885G01	199
48-44885G02	123A
48-44886G01	289
48-44887G0	116
48-45315G01	229
48-46669H01	177

† — For the following 48 types disregard any letter between 48 and main part number.

To Be Replaced	ECG Replacement
48-57120A01	116
48-60022A13	123A
48-60022A14	175
48-60022A97	109
48-60022A98	116
48-60077A06	109
48-60154A01	110
48-61074B01	109
48-61767B01	109
48-62334A01	109,110
48-62334A02	109
48-63005A66	123A
48-63005A72	123A
48-63006A56	109
48-63026A45	124
48-63026A46	108
48-63026A47	123A
48-63026A48	123A
48-63029A16	160
48-63029A17	158
48-63029A18	102
48-63029A19	102
48-63029A20	109
48-63029A60	160
48-63029A90	126
48-63029A91	102
48-63029A92	100
48-63029A93	102
48-63029A94	102
48-63044A05	102A
48-63075A72	160
48-63075A73	160
48-63075A74	126
48-63075A75	160
48-63075A76	100
48-63075A78	109
48-63076A52	123A
48-63076A81	107
48-63076A82	107
48-63076A83	123A
48-63077A03	100
48-63077A10	123A
48-63077A11	109
48-63077A29	108
48-63077A30	123A
48-63077A31	123A
48-63077A32	109
48-63078A52	107
48-63078A54	107
48-63078A59	100
48-63078A60	100
48-63078A61	100
48-63078A62	158
48-63078A63	160
48-63078A64	100
48-63078A65	126
48-63078A66	158
48-63078A68	158
48-63078A69	158
48-63078A70	123A
48-63078A71	123A
48-63078A86	102A&103A
48-63079A97	123A
48-63081A82	160
48-63082A15	100
48-63082A16	158
48-63082A24	126
48-63082A25	123A
48-63082A26	123A
48-63082A27	123A
48-63082A45	123A
48-63082A71	123A
48-63084A03	102A
48-63084A04	102A
48-63084A05	102A
48-63084A06	109
48-63086A16	116
48-63086A19	158
48-63590A01	109
48-64169	116
48-64978A10	121MP
48-64978A11	121MP
48-64978A24	121MP
48-64978A27	160
48-64978A28	160
48-64978A29	160
48-64978A39	222
48-64978A40	159
48-64978A40A	159
48-64978A41	159
48-64978A41A	159
48-65108A23	102A(2)
48-65108A62	102A(2)
48-65112A65	108
48-65112A67	108
48-65112A68	161
48-65112A73	112
48-65113A84	112
48-65113A88	108
48-65118A64	108
48-65123A67	108
48-65123A94	123A
48-65123A95	108
48-65132A79	160
48-65144A72	108
48-65145A74	116
48-65146A61	161
48-65146A62	161
48-65146A63	161
48-65147A72	123A
48-65173A78	161
48-65174A24	161
48-65177A77	129
48-65177A77A	129
48-65831A02	115

To Be Replaced	ECG Replacement
48-65837A02	109
48-65937A02	109
48-66037A03	116
48-66037A04	116
48-66037A05	116
48-66037A08	116
48-66037A10	116
48-66037A12	116
48-66544A88	358
48-66629A02	116
48-66629A03	116
48-66629A05	116
48-66629A06	116
48-66653A001	116(3)
48-66653A002	116(3)
48-66653A003	118
48-66653A005	118
48-66653A02	120
48-66653APT001	120
48-66653APT003	118
48-66653APT015	118
48-66653APT0U1	120
48-66653APT1003	118
48-66654A02	116
48-66865A01	358
48-66865A02	358B
48-66865A03	358B
48-66865A04	358B
48-67020A11	109
48-67120A01	116
48-67120A02	177(2)
48-67120A03	177
48-67120A04	125
48-67120A05	125
48-67120A06	116
48-67120A07	116
48-67120A08	119
48-67120A09	109
48-67120A10	125
48-67120A11	177
48-67120A13	177
48-67120AB	177
48-67926A01	116
48-68688A79	116
48-68688A79B	116
48-69394A01	123A
48-69723A01	513
48-69723A02	513
48-69723AD2-185	513
48-69723B02	513
48-80311A82	143A
48-80313A46	507
48-82095C01	116
48-82095C02	116
48-82095C03	116
48-82095C64	116
48-82137H01	5192A
48-82137H02	5200A
48-82137H03	5232A
48-82137H04	5174AK
48-82137H05	5175AK
48-82137H06	5188A
48-82137H07	5224A
48-82137H09	5229A
48-82139G01	109
48-82139G02	109
48-82178A01	109
48-82178A02	109
48-82178A03	109
48-82178A04	109
48-82178A05	109
48-82178A06	109
48-82178A07	109
48-82178A08	109
48-82178A09	109
48-82178A10	109
48-82178A11	109
48-82178A12	109
48-82178A13	109
48-82190H09	614
48-82196B01	5805
48-82196D26	109
48-82256C01	5013A
48-82256C02	5014A
48-82256C05	5045A
48-82256C06	141A
48-82256C07	5009A
48-82256C08	5016A
48-82256C09	5016A
48-82256C10	144A
48-82256C11	5019A
48-82256C12	5011A
48-82256C13	5023A
48-82256C14	5024A
48-82256C15	5010A
48-82256C16	5016A
48-82256C17	5021A
48-82256C18	5018A
48-82256C19	5014A
48-82256C20	5033A
48-82256C22	139A
48-82256C23	5014A
48-82256C24	5027A
48-82256C25	5021A
48-82256C26	5005A
48-82256C27	151A
48-82256C28	140A
48-82256C29	5090A
48-82256C30	5096A
48-82256C31	5031A
48-82256C32	5019A
48-82256C33	5002A
48-82256C34	5020A
48-82256C35	135A
48-82256C36	5083A

To Be Replaced	ECG Replacement
48-82256C37	5071A
48-82256C38	5018A
48-82256C39	5079A
48-82256C40	140A
48-82256C42	5082A
48-82256C43	139A
48-82256C44	5015A
48-82256C45	5017A
48-82256C46	5067A
48-82256C47	5014A
48-82256C48	5022A
48-82256C49	5031A
48-82256C50	5022A
48-82256C51	135A
48-82256C53	5077A
48-82256C54	142A
48-82256C56	139A
48-82256C57	5079A
48-82256C58	5086A
48-82256C59	145A
48-82292A01	109
48-82292A02	109
48-82292A03	109
48-82292A04	109
48-82292A05	109
48-82358D38	101
48-82383B05	116
48-82392B01	177
48-82392B02	177
48-82392B03	177
48-82392B04	177
48-82392B05	177
48-82392B06	177
48-82392B07	177
48-82392B08	177
48-82392B09	177
48-82392B10	177
48-82392B11	177
48-82392B12	177
48-82392B13	177
48-82392B14	177
48-82392B15	177
48-82420C01	177
48-82420C02	177
48-82420C03	519
48-82420C04	519
48-82420C05	177
48-82464E01	5804
48-82466H	125
48-82466H01	116
48-82466H02	116
48-82466H03	116
48-82466H04	116
48-82466H06	116
48-82466H07	116
48-82466H12	506
48-82466H13	506
48-82466H14	506
48-82466H15	506
48-82466H16	506
48-82466H18	506
48-82466H19	506
48-82466H21	506
48-82466H25	506
48-82466H28	506
48-82525G03	5806
48-82533D03	5081A
48-82533D07	5090A
48-82541F30	159
48-82541F31	123A
48-82554F33	6401
48-82580B01	116
48-82732C04	5944
48-82751K01	121
48-82854F31	184
48-82965F	5635
48-83042A53	5089A
48-83042H29	5155A
48-83042H52	121
48-83114H70	123
48-83131C34	101
48-83131C35	102
48-83131C36	102A
48-83192A14	103
48-83192A42	101
48-83192A46	108
48-83192A48	108
48-83192A49	160
48-83192A50	108
48-83192A88	126
48-83193A63	128
48-83193A75	179
48-83307B01	5484
48-83358H07	116
48-83461E01	5075A
48-83461E02	5022A
48-83461E03	5066A
48-83461E04	5093A
48-83461E06	5096A
48-83461E07	5075A
48-83461E08	147A
48-83461E09	5090A
48-83461E10	5010A
48-83461E11	5082A
48-83461E12	146A
48-83461E14	5096A
48-83461E15	5018A
48-83461E16	5095A
48-83461E17	5001A
48-83461E18	5027A
48-83461E19	5067A
48-83461E20	146A
48-83461E21	5129A
48-83461E22	5029A
48-83461E23	510

To Be Replaced	ECG Replacement
48-83461E24	5028A
48-83461E25	5014A
48-83461E26	5031A
48-83461E27	5012A
48-83461E28	5141A
48-83461E30	148A
48-83461E31	5022A
48-83461E32	5016A
48-83461E33	5027A
48-83461E34	5117A
48-83461E35	5137A
48-83461E36	137A
48-83461E37	5077A
48-83461E38	136A
48-83461E39	5135A
48-83461E40	5010A
48-83461E41	135A
48-83461E42	5071A
48-83461E44	5115A
48-83624E03	5075A
48-83624E20	5198A
48-83624E43	109
48-83624E64	116
48-83624E82	149A
48-83624E91	116
48-83697E22	5834
48-83697E23	5801
48-83697E33	5801
48-83698E10	121
48-83698E14	105
48-83698E18	123
48-83698E24	102
48-83698E26	100
48-83698E27	123
48-83698E28	128
48-83698E29	160
48-83698E30	160
48-83698E31	108
48-83698E32	108
48-83698E33	160
48-83698E34	159
48-83698E35	128
48-83698E41	100
48-83698E42	100
48-83698E43	102
48-83698E44	126
48-83698E46	121
48-83698E47	121
48-83698E48	121
48-83698E50	102
48-83698E51	100
48-83698E52	102
48-83698E53	160
48-83698E54	121
48-83698E55	121
48-83698E56	179
48-83698E57	179
48-83698E58	179
48-83698E59	179
48-83698E60	179
48-83698E61	179
48-83698E63	179
48-83698E64	179
48-83698E65	179
48-83698E66	160
48-83698E67	126
48-83698E74	213
48-83698E75	213
48-83698E82	123A
48-83698E84	123A
48-83698E97	123A
48-83698E98	213
48-83699E03	104
48-83699E04	104
48-83699E06	102
48-83699E08	179
48-83699E09	105
48-83699E10	105
48-83699E14	5079A
48-83699E21	102A
48-83699E30	175
48-83699E50	121
48-83699E61	179
48-83699E64	159
48-83699E78	5254A
48-83699E81	126
48-83741C01	5465
48-83750G01	123A
48-83750G02	121
48-83750G03	195A
48-83750G04	123A
48-83750G06	160
48-83819K44	5000A
48-83827D04	101
48-83827D07	316
48-83827D08	123A
48-83827D09	5050A
48-83875D01	5454
48-83875D03	5543
48-83875D04	5431
48-83875D05	5422
48-83875D06	5455
48-84018A08	159
48-84018A09	159
48-84066A57	123AP
48-84200D77	5006A
48-84200D78	5016A
48-84209D15	177
48-84209D18	159
48-84209D71	5103A
48-84209D72	177
48-84254C94	286
48-84254C99	5084A
48-84256C88	132
48-84256C90	123A

To Be Replaced	ECG Replacement
48-84300A83	159
48-84302A01	104
48-84302A07	116
48-84302A22	101
48-84302A23	121
48-84302A36	129
48-84302A45	160
48-84302A46	128
48-84302A47	123A
48-84302A48	123A
48-84302A49	284
48-84302A50	284
48-84302A51	128
48-84302A58	5127A
48-84302A68	5069A
48-84302A81	185
48-84302A82	123A
48-84302H31	5809
48-84303A15	123AP
48-84303A39	5081A
48-84303A45	109
48-84303A64	116
48-84305A09	218
48-84305A11	124
48-84305A12	123A
48-84305A19	159
48-84305A20	123A
48-84306A25	108
48-84306A26	5090A
48-84306A27	127
48-84306A38	137A
48-84306A39	5147A
48-84306A62	154
48-84307A09	160
48-84307A10	133
48-84307A12	5135A
48-84307A13	5020A
48-84307A16	5804
48-84307A18	5031A
48-84307A21	129
48-84307A22	159
48-84307A23	128
48-84307A40	5012A
48-84307A42	130
48-84307A48	101
48-84308A43	312
48-84308A93	159
48-84309A01	5014A
48-84309A02	5072B
48-84309A57	177
48-84553A02	123A
48-84553A05	159
48-84553A06	519
48-84553A07	5072A
48-84553A53	144A
48-84943K40	5444
48-84973C01	5522
48-84973CB1	5547
48-86148	116
48-86168-3	109
48-86200-3	109
48-86289-3	177
48-86308-3	506
48-86343-3	109
48-86376-3	123A
48-86429-3	234
48-86475-3	162
48-86850C07	177
48-86850C08	177
48-86850C15	5015A
48-86850C16	5070A
48-86850C45	5130A
48-86850C50	116
48-86850C56	5071A
48-86850C57	140A
48-86850C64	145A
48-86850C67	5081A
48-86850C74	5007A
48-86851C17	160
48-86851C23	101
48-86851C26	282
48-86851C28	160
48-86851C32	123A
48-86851C35	282
48-86851C40	160
48-86851C42	160
48-86851C47	121
48-86851C48	121
48-86851C50	159
48-86851C52	181
48-86851C55	159
48-86851C60	185
48-86851C65	284
48-86851C66	175
48-86851C67	6401
48-86851C71	346
48-86851C76	123A
48-86851C86	184
48-86851C88	106
48-86851C99	129
48-86863A04	136A
48-86904GF	160
48-87199A01	5144A
48-89855A02	102
48-90066A01	113
48-90068A01	120
48-90158A01	506
48-90165A01	159
48-90165A01A	159
48-90172A01	123A
48-90210A01	109
48-90222A08	109
48-90229A01	116
48-90232A01	161
48-90232A03	108

To Be Replaced	ECG Replacement
48-90232A04	108
48-90232A05	123A
48-90232A06	129
48-90232A06A	129
48-90232A07	124
48-90232A08	128
48-90232A09	129
48-90232A09A	129
48-90232A10	108
48-90232A11	123A
48-90232A12	129
48-90232A12A	129
48-90232A13	123A
48-90232A14	132
48-90232A15	129
48-90232A15A	129
48-90232A16	124
48-90232A17	161
48-90232A18	161
48-90232A19	108
48-90233A01	109
48-90233A04	116
48-90233A05	112
48-90233A06	109
48-90233A07	134A
48-90233A08	109
48-90234A01	116
48-90234A02	117
48-90234A03	120
48-90234A05	503
48-90234A10	295
48-90234A11	175
48-90234A12	506
48-90234A13	289
48-90234A14	290
48-90235A01	113
48-90343A06	199
48-90343A52	165
48-90343A53	506
48-90343A54	506
48-90343A55	135A
48-90343A56	175
48-90343A57	287
48-90343A58	288
48-90343A59	234
48-90343A61	198
48-90343A62	125
48-90343A64	116
48-90343A66	109
48-90343A68	290
48-90343A69	185
48-90343A70	185
48-90343A71	199
48-90343A72	165
48-90343A73	199
48-90343A77	289
48-90343A78	289
48-90343A79	199
48-90343A80	229
48-90343A81	293
48-90343A82	293
48-90343A83	199
48-90343A84	199
48-90343A85	295
48-90343A86	152
48-90343A88	601
48-90343A89	605
48-90343A90	112
48-90343A91	116
48-90343A92	116
48-90343A93	116
48-90343A94	137A
48-97046A02	102A
48-97046A03	102A
48-97046A04	108
48-97046A05	107
48-97046A06	107
48-97046A07	107
48-97046A08	126
48-97046A09	126
48-97046A10	102A
48-97046A14	5069A
48-97046A15	131
48-97046A16	126
48-97046A17	107
48-97046A18	108
48-97046A20	107
48-97046A21	107
48-97046A22	123A
48-97046A23	123A
48-97046A24	123A
48-97046A25	161
48-97046A26	159
48-97046A27	159
48-97046A28	123A
48-97046A29	128
48-97046A30	152
48-97046A31	131
48-97046A32	102A
48-97046A33	102A
48-97046A34	102A
48-97046A36	129
48-97046A37	158
48-97046A38	152
48-97046A39	129
48-97046A40	128
48-97046A42	123A
48-97046A43	123A
48-97046A45	161
48-97046A46	123A
48-97046A47	132
48-97046A48	132
48-97046A50	123A
48-97046A51	108
48-97046A52	123A

To Be Replaced	ECG Replacement
48-97046A53	102
48-97046A54	102A
48-97046A55	102A
48-97046A56	102A
48-97046A57	102A
48-97048A01	177
48-97048A02	109
48-97048A04	116
48-97048A05	110
48-97048A06	109
48-97048A07	116
48-97048A08	142A
48-97048A10	116
48-97048A16	142A
48-97048A17	177
48-97048A18	116
48-97048A19	109
48-97048A20	125
48-97127A01	116
48-97127A02	108
48-97127A03	108
48-97127A04	128
48-97127A05	158
48-97127A06	107
48-97127A09	158
48-97127A012	123A
48-97127A013	123A
48-97127A015	106
48-97127A018	123A
48-97127A019	128
48-97127A12	123A
48-97127A13	123A
48-97127A15	106
48-97127A18	123A
48-97127A19	123A
48-97127A20	102A
48-97127A22	102A
48-97127A23	158
48-97127A24	123A
48-97127A29	123A
48-97127A30	102A
48-97127A31	102A
48-97127A32	102
48-97127A33	123A
48-97162A01	108
48-97162A02	108
48-97162A03	126
48-97162A04	123A
48-97162A05	123A
48-97162A06	158
48-97162A07	158
48-97162A08	158
48-97162A09	123A
48-97162A11	102A
48-97162A12	123A
48-97162A15	123A
48-97162A16	102A
48-97162A18	102A
48-97162A19	102A
48-97162A20	102A
48-97162A21	123A
48-97162A23	123A
48-97162A24	102A
48-97162A25	102A
48-97162A26	107
48-97162A28	161
48-97162A30	161
48-97162A31	161
48-97162A32	161
48-97162A33	123A
48-97162A34	158
48-97162A35	184
48-97162A69	184
48-97168A01	109
48-97168A02	116
48-97168A03	110
48-97168A04	109
48-97168A06	116
48-97168A07	109
48-97168A09	109
48-97168A10	116
48-97168A11	116
48-97168A13	109
48-97168A14	116
48-97172A01	116
48-97177A01	132
48-97177A02	161
48-97177A03	161
48-97177A04	108
48-97177A06	132
48-97177A07	108
48-97177A08	108
48-97177A09	123A
48-97177A10	188
48-97177A11	189
48-97177A12	123A
48-97177A13	123A
48-97177A14	159
48-97177A14A	159
48-97177A15	109
48-97177H01	133
48-97221A01	102A
48-97221A02	102A
48-97221A03	102A
48-97221A04	102A
48-97221A05	102A
48-97222A01	109
48-97222A02	116
48-97238A01	126
48-97238A02	126
48-97238A03	126
48-97238A04	123A
48-97238A05	102A
48-97238A06	131
48-97238A07	102A

To Be Replaced	ECG Replacement
48-97239A01	109
48-97270A01	116
48-97270A02	109
48-97271A01	102A
48-97271A02	102A
48-97271A03	102A
48-97271A04	102A
48-97271A05	160
48-97271A06	160
48-97271A2	102A
48-97271A3	102A
48-97271A4	102A
48-97271A5	102A
48-97271A6	102A
48-97305A02	136A
48-97305A03	166
48-97305A05	136A
48-97762A02	108
48-97768A06	125
48-103083	105
48-123522	126
48-123536	126
48-123802	123A
48-123803	123A
48-124158	102A
48-124159	102A
48-124175	102A
48-124204	121
48-124206	121
48-124216	101
48-124217	101
48-124218	101
48-124219	102
48-124220	101
48-124221	101
48-124239	102A
48-124246	121
48-124247	121
48-124255	126
48-124256	126
48-124258	158
48-124259	158
48-124275	158
48-124276	158
48-124279	158
48-124285	121
48-124286	102
48-124296	160
48-124297	102
48-124300	158
48-124302	121
48-124303	102
48-124304	102
48-124305	126
48-124306	102
48-124307	100
48-124308	100
48-124309	102
48-124310	126
48-124311	126
48-124312	126
48-124313	102
48-124314	100
48-124315	100
48-124316	126
48-124317	102A
48-124318	102
48-124319	102
48-124320	126
48-124321	160
48-124322	158
48-124327	100
48-124328	100
48-124329	105
48-124332	121
48-124342	101
48-124343	100
48-124344	100
48-124345	100
48-124346	126
48-124347	126
48-124348	126
48-124349	126
48-124350	126
48-124351	126
48-124352	126
48-124353	102
48-124354	102
48-124355	102
48-124356	121
48-124357	100
48-124358	100
48-124359	100
48-124360	126
48-124362	103A
48-124363	160
48-124364	126
48-124365	126
48-124366	126
48-124367	126
48-124368	160
48-124370	100
48-124371	100
48-124373	102A
48-124376	126
48-124377	126
48-124378	100
48-124379	100
48-124380	100
48-124387	102A
48-124388	126
48-124389	100
48-124398	100
48-124443	100
48-124444	100
48-124445	100
48-124446	100
48-124804	108
48-124805	108
48-124808	108
48-125204	121
48-125208	121
48-125219	121
48-125228	126
48-125229	100
48-125230	100
48-125231	100
48-125232	100
48-125233	101
48-125234	101
48-125235	101
48-125236	101
48-125237	100
48-125238	100
48-125239	100
48-125240	100
48-125242	100
48-125252	105
48-125266	121
48-125267	121
48-125271	158
48-125276	158
48-125278	126
48-125282	102A
48-125285	102A
48-125286	105
48-125288	121
48-125294	102A
48-125296	100
48-125298	121
48-125299	105
48-125332	121
48-127021	5071A
48-128093	126
48-128094	158
48-128095	126
48-128096	126
48-128219	160
48-128239	101
48-128303	100
48-129934	121
48-129935	121
48-129936	121
48-129937	121
48-134101	126
48-134173	123A
48-134190A1G	161
48-134302	121
48-134372	126
48-134387	109
48-134404	126
48-134405	126
48-134406	126
48-134407	158
48-134408	102A
48-134411	160
48-134412	160
48-134413	126
48-134414	126
48-134415	100
48-134416	100
48-134417	100
48-134418	100
48-134419	100
48-134420	100
48-134421	100
48-134422	100
48-134423	100
48-134424	100
48-134425	100
48-134426	100
48-134427	100
48-134428	100
48-134429	100
48-134430	105
48-134431	176
48-134432	100
48-134433	100
48-134434	126
48-134439	160
48-134442	107
48-134443	100
48-134444	100
48-134445	100
48-134446	100
48-134447	121
48-134448	121
48-134449	121
48-134450	100
48-134451	121
48-134452	121
48-134454	126
48-134456	126
48-134457	126
48-134458	100
48-134459	127
48-134462	100
48-134463	121
48-134464	123A
48-134465	123A
48-134466	100
48-134467	5896
48-134468	100
48-134469	100
48-134470	100
48-134471	100
48-134472	100
48-134473	100
48-134474	100
48-134475	100
48-134476	100
48-134477	100
48-134478	129
48-134478A	129
48-134479	126
48-134480	126
48-134481	126
48-134482	158
48-134483	158
48-134484	160
48-134485	160
48-134486	160
48-134487	121
48-134488	121
48-134493	121
48-134494	100
48-134495	100
48-134496	100
48-134499	100
48-134500	100
48-134501	100
48-134504	160
48-134506	160
48-134507	160
48-134508	126
48-134509	100
48-134510	100
48-134511	102
48-134512	100
48-134514	126
48-134519	121
48-134520	101
48-134521	126
48-134522	126
48-134523	121
48-134524	160
48-134525	159
48-134525A	159
48-134526	160
48-134535	100
48-134536	126
48-134537	109
48-134538	100
48-134539	100
48-134540	100
48-134541	100
48-134542	100
48-134543	100
48-134544	100
48-134545	126
48-134547	126
48-134548	126
48-134552	144A
48-134553	100
48-134554	100
48-134555	100
48-134556	100
48-134557	100
48-134558	100
48-134559	100
48-134560	121
48-134561	126
48-134562	100
48-134563	100
48-134564	100
48-134565	100
48-134567	100
48-134570	121
48-134571	121
48-134572	102A
48-134573	102
48-134574	121
48-134575	121
48-134576	126
48-134577	126
48-134578	126
48-134579	160
48-134582	121
48-134583	121
48-134584	176
48-134585	176
48-134587	109
48-134588	109
48-134590	123A
48-134591	126
48-134592	121
48-134597	102A
48-134599	102A
48-134600	126
48-134601	126
48-134602	126
48-134603	100
48-134604	100
48-134605	126
48-134606	121
48-134607	102A
48-134610	100
48-134611	121
48-134612	121
48-134613	121
48-134620	121
48-134621	102A
48-134622	105
48-134623	127
48-134625	100
48-134626	100
48-134630	195A
48-134631	100
48-134632	102A
48-134633	158
48-134634	121
48-134635	126
48-134636	100
48-134637	100
48-134638	121
48-134639	121
48-134640	179
48-134641	100
48-134643	148A
48-134644	121
48-134645	121
48-134646	121
48-134647	121
48-134648	154
48-134649	121
48-134651	121
48-134652	127
48-134653	139A
48-134654	123A
48-134655	100
48-134656	100
48-134657	100
48-134659	144A
48-134661	121
48-134663	147A
48-134664	123A
48-134665	123A
48-134666	123A
48-134667	123A
48-134668	123A
48-134669	123A
48-134670	121
48-134671	156
48-134672	121
48-134673	123A
48-134674	123A
48-134675	123A
48-134676	160
48-134677	160
48-134678	160
48-134679	160
48-134680	126
48-134681	126
48-134682	126
48-134683	126
48-134684	126
48-134689	128
48-134690	123A
48-134691	123A
48-134692	179
48-134693	160
48-134694	160
48-134695	179
48-134696	121
48-134697	126
48-134698	135A
48-134699	150A
48-134700	101
48-134701	130
48-134701A	130
48-134702	159
48-134702A	159
48-134703	123A
48-134704	150A
48-134705	123A
48-134706	108
48-134709	108
48-134711	126
48-134713	108
48-134714	123A
48-134715	130
48-134715A	130
48-134717	108
48-134718	123A
48-134719	108
48-134720	123A
48-134721	123A
48-134722	121
48-134723	121
48-134724	108
48-134725	108
48-134726	123A
48-134727	104
48-134728	151A
48-134729	179
48-134730	121
48-134731	104
48-134732	123A
48-134733	123A
48-134733A	123A
48-134734	123A
48-134734A	123A
48-134737	123A
48-134738	121
48-134739	123A
48-134739A	124
48-134740	179
48-134741	179
48-134742	179
48-134743	179
48-134744	121
48-134745	159
48-134745A	159
48-134746	121
48-134747	104MP
48-134748	179
48-134749	179
48-134750	121
48-134751	121
48-134752	179
48-134753	179
48-134756	161
48-134757	121
48-134758	121
48-134759	121
48-134760	179
48-134761	179
48-134763	121
48-134764	121
48-134765	123A
48-134766	121
48-134767	121
48-134768	123A
48-134769	116
48-134772	108
48-134773	108
48-134774	108
48-134775	123A
48-134776	123A
48-134777	108
48-134779	108
48-134780	108
48-134781	177
48-134782	123A
48-134783	108
48-134784	108
48-134785	123A
48-134786	108
48-134787	108
48-134788	179
48-134789	107
48-134790	116
48-134791	123A
48-134792	6400
48-134795	126
48-134796	126
48-134797	126
48-134798	126
48-134800	108
48-134801	123A
48-134804	123A
48-134805	229
48-134806	108
48-134807	123A
48-134808	123A
48-134809	123A
48-134810	199
48-134811	123A
48-134813	199
48-134814	108
48-134815	159
48-134815A	159
48-134816	177
48-134817	123A
48-134818	108
48-134819	154
48-134820	108
48-134821	108
48-134822	123A
48-134823	199
48-134824	123A
48-134825	229
48-134826	108
48-134827	108
48-134828	108
48-134829	159
48-134829A	159
48-134830	159
48-134830A	234
48-134831	234
48-134831A	234
48-134832	234
48-134832A	234
48-134833	159
48-134833A	159
48-134837	107
48-134838	128
48-134839	123A
48-134840	123A
48-134841	123A
48-134842	123A
48-134843	154
48-134844	123A
48-134845	107
48-134846	287
48-134847	123A
48-134848	123A
48-134850	141A
48-134851	141A
48-134852	123A
48-134853	154
48-134854	123A
48-134855	108
48-134856	176
48-134857	229
48-134858	147A
48-134859	126
48-134860	126
48-134861	126
48-134862	126
48-134865	159
48-134865A	159
48-134866	159
48-134866A	159
48-134867	159
48-134867A	159
48-134868	159
48-134868A	159
48-134869	159
48-134869A	159
48-134870	159
48-134870A	159
48-134871	159
48-134871A	159
48-134872	124
48-134879	108
48-134880	126
48-134882	130
48-134884	130
48-134885	124
48-134888	121
48-134889	123A
48-134891	108
48-134892	108
48-134893	108
48-134894	123A
48-134895	123A
48-134896	123A
48-134897	123A
48-134898	154
48-134899	123A
48-134900	162
48-134901	163A
48-134902	108
48-134903	123A
48-134904	107
48-134904A1G	107
48-134904F	107
48-134905	123A
48-134906	123A
48-134907	104
48-134908	108
48-134909	159
48-134909A	159
48-134910	159
48-134910A	159
48-134910F	159
48-134911	159
48-134912	5072A
48-134913	159
48-134913A	159
48-134914	159
48-134914A	159
48-134915	159
48-134915A	159
48-134916	178MP
48-134917	178MP
48-134918	123A
48-134919	154
48-134920	124
48-134921	506
48-134922	107
48-134923	107
48-134924	107
48-134925	107
48-134926	107
48-134927	154
48-134928	123A
48-134929	123A
48-134930	121
48-134931	101
48-134932	233
48-134932(3rd IF)	233
48-134933	123A
48-134933E	123A
48-134934	127
48-134935	123A
48-134936	175
48-134937	108
48-134938	121
48-134939	506
48-134940	159
48-134940A	159
48-134941	128
48-134942	123A
48-134943	159
48-134943A	159
48-134944	133
48-134945	107
48-134946	108
48-134947	121
48-134948	108
48-134949	108
48-134950	108
48-134951	129
48-134951A	129
48-134952	123A
48-134953	128
48-134954	110
48-134955	149A
48-134956	100
48-134957	139A
48-134958	116
48-134959	116
48-134960	108
48-134961	107
48-134962	107
48-134963	107
48-134964	107
48-134965	107
48-134966	107
48-134967	159
48-134967A	159
48-134969	130
48-134970	123A
48-134971	148A
48-134972	124
48-134973	159
48-134973A	159
48-134974	121
48-134975	159
48-134975A	159
48-134977	121
48-134978	506
48-134979	108
48-134980	123A
48-134981	107
48-134982	128
48-134983	108
48-134985	108
48-134987	185
48-134988	123A
48-134989	159
48-134989A	159
48-134990	116
48-134991	135A
48-134992	123A
48-134993	136A
48-134994	123A
48-134995	163A
48-134996	123A
48-134997	199
48-134998	157
48-136665	123A
48-137000	143A
48-137001	127
48-137002	154
48-137003	123A
48-137004	108
48-137005	128
48-137006	108
48-137007	123A
48-137008	130
48-137008A	130
48-137010	123A
48-137011	190
48-137013	123A
48-137014	123A
48-137015	199
48-137017	144A
48-137019	123A
48-137020	159
48-137020A	159
48-137021	159
48-137022	123A
48-137023	133
48-137024	5400
48-137025	104
48-137026	104
48-137027	130
48-137027A	130
48-137028	5130A
48-137029	116
48-137030	241
48-137031	121
48-137032	159
48-137032A	159
48-137033	108
48-137034	146A
48-137035	154
48-137036	130
48-137036A	130
48-137037	184
48-137039	176
48-137040	107
48-137041	128
48-137043	123A
48-137044	123A
48-137045	159
48-137045A	159
48-137046	159
48-137047	123A
48-137048	144A
48-137049	180
48-137053	130
48-137053A	130
48-137055	108
48-137056	123A
48-137057	123A
48-137058	6400
48-137059	107
48-137061	159
48-137062	5033A
48-137065	6407
48-137066	106
48-137067	159
48-137067A	159
48-137068	159
48-137068A	159
48-137069	159
48-137069A	159
48-137070	220
48-137071	107
48-137072	123A
48-137073	123A
48-137074	116
48-137075	107
48-137076	107
48-137077	107
48-137079	130
48-137079A	130
48-137080	197
48-137081	502
48-137082	503
48-137083	123A
48-137088	128
48-137089	123A
48-137090	159
48-137090A	159
48-137091	188
48-137092	188
48-137093	190
48-137095	184
48-137096	123A
48-137098	5800
48-137101	123A
48-137102	104
48-137104	108
48-137105	108
48-137106	123A
48-137107	123A
48-137108	123A
48-137109	123A
48-137110	123A
48-137111	123A
48-137112	506
48-137113	191
48-137114	505
48-137115	123A
48-137116	181
48-137118	121
48-137119	121
48-137120	121
48-137121	179

To Be Replaced	ECG Replacement
48-137122	121
48-137123	121
48-137124	121
48-137125	179
48-137126	108
48-137127	159
48-137127A	159
48-137128	184
48-137130	139A
48-137132	146A
48-137133	507
48-137134	163A
48-137136	108
48-137137	123A
48-137138	123A
48-137139	123A
48-137140	108
48-137142	5444
48-137143	116
48-137144	108
48-137145	184
48-137146	184
48-137147	184
48-137148	184
48-137149	188
48-137153	185
48-137154	185
48-137155	185
48-137156	185
48-137157	185
48-137158	108
48-137160	189
48-137164	139A
48-137165	6400
48-137166	108
48-137167	178MP
48-137168	189
48-137169	188
48-137170	137A
48-137171	123A
48-137171D	123A
48-137172	123A
48-137173	159
48-137173A	159
48-137174	123A
48-137175	130
48-137175A	130
48-137176	159
48-137176A	159
48-137177	142A
48-137178	127
48-137179	163A
48-137180	130
48-137180A	130
48-137183	5882
48-137184	5484
48-137185	197
48-137188	141A
48-137190	108
48-137191	108
48-137192	123A
48-137193	158
48-137194	108
48-137195	159
48-137196	108
48-137197	161
48-137198	116
48-137199	102
48-137200	184
48-137202	188
48-137203	163A
48-137205	125
48-137206	123A
48-137207	124
48-137208	116
48-137209	143A
48-137210	137A
48-137211	184
48-137212	125
48-137213	104
48-137214	131
48-137215	104
48-137216	104
48-137217	104
48-137218	104
48-137219	104
48-137220	104
48-137234	127
48-137235	127
48-137238	194
48-137239	191
48-137240	189
48-137251	130
48-137256	185
48-137257	123A
48-137258	185
48-137259	197
48-137260	123A
48-137265	123A
48-137266	147A
48-137267	131
48-137268	131
48-137269	131
48-137270	131
48-137271	131
48-137272	142A
48-137277	184
48-137278	194
48-137279	5014A
48-137280	5400
48-137281	5404
48-137282	6400
48-137290	125
48-137291	116
48-137295	5404

To Be Replaced	ECG Replacement
48-137297	141A
48-137298	144A
48-137299	109
48-137300	199
48-137301	125
48-137302	125
48-137303	185
48-137304	185
48-137306	5030A
48-137307	128
48-137308	131
48-137309	196
48-137310	197
48-137311	241
48-137312	153
48-137313	219
48-137314	189
48-137315	128
48-137316	125
48-137318	159
48-137319	188
48-137320	189
48-137321	193
48-137322	5011A
48-137323	184
48-137324	159
48-137325	199
48-137326	162
48-137327	5804
48-137328	5016A
48-137329	104
48-137330	5024A
48-137331	242
48-137332	194
48-137333	130
48-137334	141A
48-137336	123A
48-137337	5010A
48-137338	5486
48-137339	108
48-137340	5804
48-137341	165
48-137342	127
48-137342-P47	127
48-137343	132
48-137344	130
48-137347	125
48-137348	125
48-137349	5442
48-137350	123A
48-137351	229
48-137352	108
48-137353	123A
48-137354	123A
48-137355	108
48-137364	154
48-137365	144A
48-137366	159
48-137367	127
48-137368	130
48-137369	241
48-137370	242
48-137371	108
48-137372	108
48-137373	123A
48-137374	123A
48-137375	108
48-137376	108
48-137377	123A
48-137378	123A
48-137379	159
48-137380	159
48-137381	159
48-137382	159
48-137383	159
48-137384	123A
48-137385	177
48-137386	194
48-137387	137A
48-137388	108
48-137390	199
48-137391	159
48-137392	172A
48-137393	5019A
48-137394	5024A
48-137395	5404
48-137396	152
48-137397	513
48-137398	123A
48-137399	123A
48-137400	107
48-137415	154
48-137421	5072A
48-137437	152
48-137472	183
48-137473	184
48-137476	191
48-137483	108
48-137487	614
48-137488	222
48-137491	161
48-137495	109
48-137497	109
48-137498	123A
48-137500	123A
48-137501	185
48-137502	159
48-137504	159
48-137505	188
48-137506	152
48-137507	153
48-137509	123A
48-137512	247
48-137514	177
48-137524	283

To Be Replaced	ECG Replacement
48-137526	241
48-137527	242
48-137528	286
48-137530	123A
48-137531	5444
48-137533	506
48-137535	124
48-137539	165
48-137540	153
48-137543	123A
48-137546	506
48-137548	164
48-137549	184
48-137550	185
48-137551	506
48-137552	186
48-137553	187
48-137561	185
48-137562	242
48-137563	143A
48-137566	153
48-137567	222
48-137572	188
48-137573	177
48-137577	5073A
48-137610	189
48-137612	107
48-137621	5073A
48-137801	502
48-137855	123A
48-137978	121
48-137988	128
48-137998	123A
48-155001	165
48-155002	502
48-155005	175
48-155006	154
48-155013	196
48-155014	197
48-155030	116
48-155034	198
48-155035	290
48-155037	116
48-155039	109
48-155040	116
48-155041	177
48-155042	186A
48-155043	198
48-155044	175
48-155045	234
48-155046	297
48-155047	177
48-155048	5074A
48-155050	5404
48-155051	287
48-155052	605
48-155053	130
48-155054	140A
48-155056	506
48-155057	116
48-155058	238
48-155059	198
48-155060	178MP
48-155061	109
48-155062	152
48-155063	116
48-155065	234
48-155066	153
48-155067	130
48-155068	5633
48-155069	198
48-155070	198
48-155071	199
48-155072	198
48-155073	199
48-155074	186A
48-155075	239
48-155076	165
48-155077	177
48-155078	110
48-155079	116
48-155080	5070A
48-155081	5074A
48-155083	125
48-155084	5074A
48-155085	116
48-155086	274
48-155087	229
48-155088	123A
48-155089	199
48-155090	238
48-155091	291
48-155092	5404
48-155093	199
48-155094	194
48-155095	290
48-155095(NPN)	194
48-155095(PNP)	290
48-155096	198
48-155097	186
48-155098	187
48-155099	116
48-155100	116
48-155102	199
48-155103	142A
48-155104	145A
48-155105	162
48-155106	116
48-155107	506
48-155108	506
48-155110	198
48-155113	5404
48-155116	187A
48-155117	297
48-155118	283

To Be Replaced	ECG Replacement
48-155119	289
48-155121	293
48-155122	294
48-155123	192
48-155125	506
48-155126	116
48-155127	5069A
48-155128	506
48-155130	198
48-155131	605
48-155133	198
48-155136	116
48-155139	506
48-155140	238
48-155146	137A
48-155148	601
48-155150	199
48-155152	525
48-155153	198
48-155154	199
48-155156	290
48-155158	5092A
48-155159	177
48-191807	116
48-217241	181
48-232796	181
48-355002	123A
48-355004	199
48-355005	198
48-355006	234
48-355007	159
48-355008	110
48-355009	109
48-355012	287
48-355013	506
48-355014	178MP
48-355016	116
48-355023	116
48-355025	116
48-355029	5404
48-355035	177
48-355036	177
48-355037	297
48-355038	198
48-355039	186A
48-355040	152
48-355042	175
48-355043	238
48-355044	198
48-355045	601
48-355046	601
48-355047	504
48-355048	116
48-355049	116
48-355050	5082A
48-355052	123A
48-355053	229
48-355054	171
48-355055	193
48-355057	290
48-355058	288
48-355059	152
48-355062	5074A
48-644587	109
48-644676	160
48-644677	160
48-644678	102A
48-644679	158
48-644681	109
48-645867	160
48-646954	116
48-647311	109
48-647313	109
48-647829	116
48-660370A05	116
48-674297U	112
48-674970	112
48-711052	109
48-732230	358
48-733746	116
48-739300	109
48-741255	178MP
48-741280	109
48-741656	178MP
48-741724	178MP
48-741752	114
48-742698	114
48-742970	112
48-746831	116
48-751656	113
48-751724	115
48-752497	116
48-754153	114
48-818459	5071A
48-822321E07	5283A
48-822321E08	5283AK
48-859248	128
48-863030	109
48-864449	109
48-865539	110MP
48-866710	121
48-866978	121
48-867716	109
48-868674	5986
48-869001	102A
48-869002	123A
48-869003	160
48-869009	160
48-869016	123A
48-869019	121
48-869037	123A
48-869038	160
48-869040	160
48-869041	160
48-869050	129

To Be Replaced	ECG Replacement
48-869052	195A
48-869058	160
48-869059	123A
48-869061	195A
48-869070	123A
48-869071	160
48-869075	103A
48-869080	160
48-869081	160
48-869083	121
48-869087B	104
48-869090	127
48-869091	121
48-869092	103
48-869093	103
48-869096	123A
48-869098	160
48-869099B	104
48-869104	121
48-869105	102A
48-869108	160
48-869110	123A
48-869113	102A
48-869118	104
48-869125	195A
48-869126	158
48-869136	123A
48-869138	128
48-869141	121
48-869142	121
48-869144	123A
48-869145	129
48-869147	195A
48-869148	102
48-869160	158
48-869168	126
48-869170	128
48-869174	195A
48-869177	176
48-869182	121
48-869184	128
48-869186	195A
48-869187	195A
48-869190	160
48-869192	160
48-869197	199
48-869198	102A
48-869199	123A
48-869201	102A
48-869202	121
48-869205	179
48-869206	6400
48-869209	195A
48-869221	128
48-869225	175
48-869226-0	123A
48-869228	128
48-869237	121
48-869241	121
48-869244	130
48-869245	123A
48-869248	123A
48-869249	102
48-869250	102
48-869251	105
48-869252	108
48-869253	102
48-869254	103
48-869255	121
48-869256	6401
48-869257	129
48-869258	160
48-869259	130
48-869260	195A
48-869263	128
48-869264	6400
48-869265	198
48-869266	161
48-869269	199
48-869271	195A
48-869273C	163A
48-869274	175
48-869278	130
48-869279C	162
48-869282	102
48-869283	103
48-869285	195A
48-869286	198
48-869287	124
48-869293	199
48-869294	121
48-869299	123A
48-869301	175
48-869302	130
48-869306	314
48-869308	129
48-869309	175
48-869312	123A
48-869316	175
48-869320	198
48-869321	130
48-869323	123A
48-869325	123A
48-869329	123A
48-869334	159
48-869337	162
48-869338	199
48-869342	121
48-869347	179
48-869355	195A
48-869357	123A
48-869366	123A
48-869377	123A
48-869378	123A
48-869380	128

To Be Replaced	ECG Replacement
48-869384	199
48-869385	6409
48-869389	289
48-869390	123A
48-869393	175
48-869398	129
48-869400	129
48-869408	162
48-869409	199
48-869412	234
48-869413	159
48-869416	199
48-869418	123A
48-869420	121
48-869426	129
48-869427	179
48-869430	195A
48-869431	195A
48-869432	129
48-869435	129
48-869436	121
48-869444	123A
48-869447	199
48-869450	161
48-869453	123A
48-869458	121
48-869464	128
48-869465	198
48-869467	234
48-869474	199
48-869475	102
48-869475A	102
48-869476	103
48-869476A	103
48-869480	181
48-869481	161
48-869483	107
48-869486	199
48-869491	195A
48-869497	199
48-869515	130
48-869517	121
48-869518	102A
48-869519	195A
48-869520	129
48-869521	192
48-869525	123A
48-869526	159
48-869527	158
48-869532	123A
48-869536	225
48-869547	199
48-869550	121
48-869561	128/401
48-869562	128
48-869563	123A
48-869565	133
48-869568	123A
48-869570	123A
48-869571	159
48-869576	152
48-869580	350
48-869582	185
48-869583	351
48-869586	359
48-869587	350
48-869588	348
48-869590	6409
48-869591	128
48-869594	199
48-869599	128
48-869610	175
48-869616	359
48-869617	359
48-869618	184
48-869622	353
48-869623	354
48-869624	355
48-869625	356
48-869628	181
48-869629	181
48-869631	128
48-869639	181
48-869640	188
48-869641	189
48-869642	123AP
48-869649	159
48-869659	350
48-869660	223
48-869661	152
48-869665	320
48-869671	281
48-869675	123A
48-869676	196
48-869677	197
48-869681	129
48-869701	197
48-869703-3	128
48-869711	320
48-869740	366
48-869741	366
48-869755	367
48-869765	350
48-869767	123A
48-869773	316
48-869775	351
48-869844	316
48-869847	317
48-869851	366
48-7322230	358
48A41508A01	116
48A42383A01	614
48A82656B01	109
48A82656B02	109
48A84302A60	5141A

To Be Replaced	ECG Replacement
48A124327	102
48B41226G01	506
48B41768G01	109
48B43265G01	116
48B81119	109
48B407624P1	123A
48B864199	177
48B872157	109
48B874355	109
48C-1(IC)	1091 *
48C1(IC)	1091 *
48C-40235-602	116
48C40235G01	116
48C40235G02	506
48C61074B01	109
48C65837A02	109
48C82095C01	116
48C82095C02	116
48C82116E01	112
48C82137H05	5175AK
48C82178A02	109
48C82178A04	109
48C82178A07	109
48C82256C06	141A
48C82256C07	5009A
48C82256C09	5016A
48C82256C11	140A
48C82256C12	136A
48C82256C14	145A
48C82256C15	5010A
48C82256C16	5072A
48C82392B01	177
48C82420C08	116
48C82478C03	5876
48C82525G07	5800
48C82583B01	112
48C82617C01	177
48C82732C04	5944
48C84302A06	177
48C84302A07	177
48C84302A09	137A
48C86484A01	110
48C848523	116
48C851644	116
48C863751	5870
48C867380	5801
48C873019	5009A
48C875657	116
48C876313	116
48C(IC)	1091 *
48-CSP1002	121
48D67	177
48D8375D02	5455
48D67120A02	116
48D67120A11	177
48D67120A13	177
48D69723A01	513
48D69723A02-185	513
48D82256C17	5021A
48D82256C18	5018A
48D82256C19	5014A
48D82256C20	146A
48D82256C23	5014A
48D82256C24	5027A
48D82256C25	142A
48D82256C27	151A
48D82256C28	140A
48D82256C29	5090A
48D82256C30	5096A
48D82256C31	5081A
48D82256C33	5063A
48D82256C34	5074A
48D82256C37	5071A
48D82256C39	5079A
48D82256C40	140A
48D82256C43	139A
48D82256C44	5015A
48D82256C46	5067A
48D82256C49	5031A
48D82256C51	5116A
48D82256C53	5077A
48D82256C54	142A
48D82256C56	139A
48D82256C60	146A
48D82256D38	139A
48D82323B02	5832
48D82420C01	177
48D82420C02	177
48D82420C03	519
48D82420C04	519
48D82420C05	177
48D82420C11	519
48D82420C15	177
48D82420C16	519
48D82533D02	145A
48D82533D06	5101A
48D82533D08	5116A
48D82533D09	5077A
48D83461E01	5075A
48D83461E03	5066A
48D83461E06	5096A
48D83461E12	146A
48D83461E13	5068A
48D83461E15	5018A
48D83461E16	5095A
48D83875D01	5454
48D83875D03	5543
48D83875D04	5431
48D83875D05	5422
48D83875D06	5455
48D87200A01	5801
48G13001A01	124
48K134482	102
48K134483	102
48K134583	121

@, * — See special notes on inside back cover.

To Be Replaced	ECG Replacement
48K134584	121
48K644681	109
48K851645	116
48K863030	109
48K865539	110MP
48K867716	109
48K868734	116
48K869228	128
48K869269	199
48K869293	199
48K869309	175
48K869342	121
48K869409	199
48K869447	199
48K869474	199
48K869486	199
48K869515	130
48-K869575	108
48M355046	601
48NSP1035	121
48-P02597A	123A
48P1	102A
48P-2A5	102A
48P3624E15	5191A
48P8369E07	5000A
48P63078A71	123A
48P63082A45	108
48P63082A71	108
48P65112A73	112
48P65146A61	107
48P65146A63	108
48P65173A78	108
48P65174A24	161
48P82358D33	109
48P83042H54	5804
48P83042H55	5268A
48P83151D76	5800
48P83192A09	109
48P83192A10	177
48P83193A60	5021A
48P83624E01	138A
48P83624E02	140A
48P83624E04	5079A
48P83624E05	5080A
48P83624E06	5084A
48P83624E08	5182A
48P83624E09	5183A
48P83624E10	5185A
48P83624E11	5186A
48P83624E12	5187A
48P83624E13	5188A
48P83624E14	5189A
48P83624E16	5192A
48P83624E17	5194A
48P83624E18	5196A
48P83624E19	5197A
48P83624E21	5200A
48P83624E22	5202A
48P83624E23	5071A
48P83624E24	138A
48P83624E25	5072A
48P83624E26	5074A
48P83624E27	143A
48P83624E28	5075A
48P83624E29	5080A
48P83624E30	146A
48P83624E31	5084A
48P83624E43	109
48P83624E44	109
48P83624E45	109
48P83624E46	177
48P83624E47	177
48P83624E48	116
48P83624E49	116
48P83624E50	116
48P83624E52	5066A
48P83624E54	139A
48P83624E56	5014A
48P83624E57	5072A
48P83624E59	5038A
48P83624E60	150A
48P83624E63	5850
48P83624E65	5804
48P83624E66	5802
48P83624E67	5806
48P83624E73	5196AK
48P83624E75	5205A
48P83624E76	5217A
48P83624E78	5220A
48P83624E79	140A
48P83624E80	5081A
48P83624E81	5086A
48P83624E82	149A
48P83624E83	116
48P83624E84	116
48P83624E85	116
48P83624E86	5940
48P83624E87	5942
48P83624E88	5948
48P83624E89	125
48P83624E90	525
48P83624E91	116
48P83624E92	5074A
48P83624E93	5075A
48P83624E94	5077A
48P83624E95	5081A
48P83624E96	5125A
48P83624E97	5130A
48P83698E08	5801
48P83698E09	5801
48P83699E12	5014A
48P83827D09	5982
48P83827D10	5002A
48P217241	181
48P232796	181

To Be Replaced	ECG Replacement
48R2	5866
48R25	5866
48R84302A02	109
48R84302A03	109
48R84302A10	137A
48R84302A12	177
48R84302A15	141A
48R84302A16	141A
48R84302A18	5089A
48R84302A19	5090A
48R84302A20	177
48R84302A39	5085A
48R84302A58	5127A
48R84302A77	5137A
48R86851C71	346
48R87200A02	5802
48R134545	160
48R134582	121
48R134606	121
48R134621	102A
48R134632	102A
48R430265	519
48R869090	127
48R869092	103
48R869093	103
48R869141	121
48R869142	121
48R869145	129
48R869170	128
48R869197	199
48R869202	121
48R869205	121
48R869206	6400
48R869209	195A
48R869225	175
48R869241	121
48R869244	130
48R869250	102
48R869251	105
48R869255	121
48R869256	6401
48R869257	129
48R869264	6400
48R869301	175
48R869302	130
48R869306	314
48R869312	123A
48R869321	130
48R869325	123A
48R869329	123A
48R869334	159
48R869338	199
48R869384	199
48R869389	289
48R869412	234
48R869413	159
48R869416	199
48R869432	129
48R869436	121
48R869444	123A
48R869467	234
48R869491	195A
48R869519	195A
48R869520	129
48R869521	192
48R869525	123A
48R869526	159
48R869547	199
48R869550	121
48R869562	128
48R869563	123A
48R869568	123A
48R869570	123A
48R869571	159
48R869580	350
48R869582	185
48R869583	351
48R869586	359
48R869587	350
48R869588	348
48R869594	199
48R869599	311
48R869616	359
48R869617	359
48R869618	184
48R869622	353
48R869623	354
48R869624	355
48R869625	356
48R869640	188
48R869641	189
48R869649	159
48R869659	350
48R869665	320
48R869676	196
48R869711	320
48R869740	366
48R869741	366
48R869755	367
48R869765	350
48R869767	123A
48R869773	316
48R869775	351
48R869844	316
48R869847	317
48R869851	366
48R969681	129
48R8430266	5065A
48R8430267	5802
48S50	218
48S191A02	116
48S191A05	506
48S191A05A	506
48S191A07	116
48S191A08	506

To Be Replaced	ECG Replacement
48S4076P01	235
48S4219G01	107
48S4324G01	153
48S4328G02	159
48S10346A02	109
48S10577A01	177
48S10577A02	177
48S10577A11	177
48S10577A11(Diode)	177
48S10577A11(Transistor)	105
48S10577A13(Diode)	177
48S10577A13(Transistor)	105
48S10641D62	137A
48S13270	131
48S40149P01	199
48S40170G01	199
48S40170G01	199
48S40235G02	116
48S40246G01	199
48S40247G01	199
48S40247G03	199
48S40247G04	199
48S40382J01	186
48S40383J01	187
48S40606J02	199
48S40607J01	199
48S40732P01	229
48S42191G01	107
48S43238G01	159
48S43239G02	289
48S43240G01	152
48S43241G01	152
48S43991J01	108
48S43992J01	108
48S44578J01	199
48S44580J02	229
48S44657G01	1022
48S44883G01	152
48S44884G01	153
48S44884G01	153
48S44885G01	123A
48S44885G02	123A
48S44886G02	289
48S44886G03	289
48S44886G04	289
48S45315G01	229
48S45315G03	229
48S134815	159
48S134816	177
48S134902	108
48S134903	123A
48S134916	113
48S134917	178MP
48S134919	154
48S134921	116
48S134932	233
48S134933	123A
48S134936	196
48S134939	116
48S134944	132
48S134946	108
48S134960	108
48S134970	108
48S134979	108
48S134981	161
48S134988	192
48S134989	193
48S134997	123A
48S137000	142A
48S137006	108
48S137015	199
48S137021	5072A
48S137032	159
48S137041	128
48S137082	503
48S137107	123A
48S137110	123A
48S137114	505
48S137115	123A
48S137127	159
48S137133	177
48S137167	178MP
48S137168	189
48S137169	188
48S137171	123A
48S137172	123A
48S137173	159
48S137174	123A
48S137266	147A
48S137272	147A
48S137299	109
48S137300	123A
48S137309	152
48S137310	153
48S137311	152
48S137312	153
48S137315	123A
48S137323	196
48S137330	145A
48S137341	165
48S137343	132
48S137344	130
48S137347	116
48S137348	116
48S137364	191
48S137369	152
48S137370	153
48S137386	194
48S137397	513
48S137442	5080A
48S137476	123A
48S137498	123A
48S137512	247
48S137524	163A
48S137528	124

To Be Replaced	ECG Replacement
48S137530	123A
48S137533	506
48S137535	124
48S137539	165
48S137543	123A
48S137546	506
48S137548	162
48S137551	506
48S137572	188
48S155001	165
48S155002	502
48S155005	175
48S155006	154
48S155013	152
48S155030	116
48S155034	198
48S155035	290
48S155037	116
48S155039	109
48S155040	116
48S155041	116
48S155042	186A
48S155043	198
48S155044	175
48S155045	234
48S155046	297
48S155047	177
48S155048	5074A
48S155050	5404
48S155051	287
48S155052	605
48S155053	130
48S155054	116
48S155056	506
48S155057	116
48S155058	238
48S155059	198
48S155060	178
48S155061	109
48S155062	152
48S155063	116
48S155066	153
48S155067	130
48S155068	5633
48S155069	198
48S155070	198
48S155072	198
48S155073	199
48S155074	186A
48S155075	239
48S155076	165
48S155077	177
48S155078	109
48S155079	116
48S155080	5070A
48S155081	5074A
48S155083	125
48S155084	5074A
48S155087	229
48S155088	123A
48S155089	199
48S155090	238
48S155091	291
48S155092	5404
48S155094	194
48S155095	194
48S155096	198
48S155099	116
48S155100	116
48S155103	142A
48S155104	145A
48S155105	162
48S155106	116
48S155107	506
48S155108	506
48S155110	198
48S155116	187A
48S155117	297
48S155118	283
48S155121	293
48S155122	294
48S155123	192
48S155126	116
48S155127	5069A
48S155128	506
48S155139	506
48S155140	238
48T44a70T01	140A
48T40734P01	295
48T42884P01	295
48T42885P01	235
48T66544A88	358
48-V34816	177
48X90234A05	503
48X97046A48	158
48X97046A51	108
48X97046A52	128
48X97046A53	102A
48X97046A54	102A
48X97046A55	102A
48X97046A60	123A
48X97046A61	123A
48X97046A62	123A
48X97048A06	109
48X97048A10	116
48X97048A19	109
48X97162A01	108
48X97162A02	108
48X97162A04	108
48X97162A05	123A
48X97162A06	102A
48X97162A07	102A
48X97162A09	108
48X97162A10	108
48X97162A21	123A

To Be Replaced	ECG Replacement
48X97162A36	158
48X97162A37	158
48X97168A01	109
48X97168A03	109
48X97168A04	109
48X97172A01	116
48X97177H01	133
48X97238A01	126
48X97238A02	126
48X97238A03	126
48X97238A04	123A
48X97238A05	102
48X97238A06	131MP
48X97239A01	109
49-1	108
49-1042	116
49-3112	116
49-61963	5444
49-62139	128
49A0000	7475
49A0002-000	7473
49A0005-000	7410
49A0006-000	7420
49A0010	9944
49A0012-000	7474
49A0103-001	923
49A0510	9944
49C(IC)	1086A*
49L-4A5	102A
49P1C	121
49S1	177
50-30307-07	294
50-40101-04	108
50-40101-05	108
50-40102-04	123A
50-40102-05	229
50-40105-08	123A
50-40106-09	159
50-40201-08	123A
50-40201-09	123A
50-40201-10	123A
50-40204-10	159
50-40205-09	129
50-40306-07	293
50A	116
50A52	126
50A102	126
50A103	129
50A103K	126
50AS	116
50B5	116
50B54	102A
50B173-C	102A
50B173-S	102A
50B175A	102A
50B175B	102A
50B175C	102A
50B324	158
50B364	158
50B415	158
50B423	102A
50BU75-C	102A
50C	116
50C05	6020
50C05R	6021
50C10	6022
50C10R	6023
50C20	6026
50C20R	6027
50C30	6030
50C30R	6031
50C40	6034
50C40R	6035
50C50	6038
50C50R	6039
50C60	6040
50C60R	6041
50C70	6042
50C70R	6043
50C80	6042
50C80R	6043
50C90	6044
50C90R	6045
50C100	6044
50C100R	6045
50C371	123A
50C372	123A
50C373	123A
50C374	123A
50C380-0	107
50C380-OR	107
50C394-0	107
50C394-R	107
50C401	130
50C538	123A
50C644	123A
50C784	108
50C784-R	107
50C828	123A
50C829	108
50C829B	108
50C829C	108
50C838	123A
50C1047	108
50C(IC)	1084
50CJ139	123A
50D2	116
50D4	116
50D8	125
50D10	125
50E05	116
50E1	116
50E2	116
50E3	116
50E4	116

To Be Replaced	ECG Replacement
50E5	116
50E6	116
50E7	125
50E8	125
50E10	125
50F1	5840
50F5	5860
50H3P	5860
50H3PN	5861
50J1	5805
50J2P	5880
50J2P	5880
50J3P	5880
50JH3	6064
50M	116
50M24Z5	5137A
50M33Z5	5142A
50M62Z5	5150A
50P2	126
50P3	126
50R2S	5868
50S5	5840
50T6.8	5247A
50T6.8A	5247A
50T6.8B	5247A
50T7.5	5248A
50T7.5A	5248A
50T7.5B	5248A
50T8.2	5249A
50T8.2A	5249A
50T8.2B	5249A
50T9.1	5251A
50T9.1A	5251A
50T9.1B	5251A
50T10	5252A
50T10A	5252A
50T10B	5252A
50T11	5253A
50T11A	5253A
50T11B	5253A
50T13B	5254A
50T14(TRANS)	5254A
50T12B	5254A
50T13	5255A
50T13A	5255A
50T13B	5255A
50T14	123A
50T15	5257A
50T15A	5257A
50T15B	5257A
50T16	5258A
50T16A	5258A
50T16B	5258A
50T18	5260A
50T18A	5260A
50T18B	5260A
50T20	5262A
50T20A	5262A
50T20B	5262A
50T22	5263A
50T22A	5263A
50T22B	5263A
50T24	5264A
50T24A	5264A
50T24B	5264A
50T30	5268A
50T30A	5268A
50T30B	5268A
50T33	5269A
50T33A	5269A
50T33B	5269A
50T36	5270A
50T36A	5270A
50T36B	5270A
50T39	5271A
50T39A	5271A
50T39A	5271A
50T39B	5271A
50T43	5272A
50T43A	5272A
50T43B	5272A
50T47	5274A
50T47A	5274A
50T47B	5274A
50T51	5276A
50T51A	5276A
50T51B	5276A
50T68	5281A
50T68A	5281A
50T68B	5281A
50T75	5282A
50T75A	5282A
50T75B	5282A
50T82	5283A
50T82A	5283A
50T82B	5283A
50T91	5284A
50T91A	5284A
50T91B	5284A
50T100	5285A
50T100A	5285A
50T100B	5285A
50T110	5287A
50T110A	5287A
50T110B	5287A
50T120	5288A
50T120A	5288A
50T120B	5288A
50T130	5289A
50T130A	5289A
50T130B	5289A
50T150	5291A
50T150A	5291A
50T160	5292A
50T160A	5292A

To Be Replaced	ECG Replacement
50T160B	5292A
50T180	5294A
50T180A	5294A
50T180B	5294A
50T200	5296A
50T200A	5296A
50T200B	5296A
50Z9.1	139A
50Z9.1A	139A
50Z9.1B	139A
50Z9.1C	139A
50Z11	141A
50Z11A	141A
50Z11B	141A
50Z11C	141A
50Z12	142A
50Z12A	142A
50Z12B	142A
50Z12C	142A
50Z14	144A
50Z14A	144A
50Z14B	144A
50Z14C	144A
50Z15	145A
50Z15A	145A
50Z15B	145A
50Z15C	145A
50Z27	146A
50Z27A	146A
50Z27B	146A
50Z27C	146A
50Z33	147A
50Z33A	147A
50Z33B	147A
50Z33C	147A
50Z56	149A
50Z56A	149A
50Z56B	149A
50Z56C	149A
50Z62	149A
50Z62A	149A
50Z62B	149A
50Z62C	149A
50Z82	150A
50Z82A	150A
50Z82B	150A
50Z82C	150A
50Z110	151A
50Z110A	151A
50Z110B	151A
50Z110C	151A
51	108
51-0022-00	709
51-02006-12	5072A
51-02007-12	5018A
51-03007-06	116
51-03009A02	746
51-03009A04	74LS193
51-03009A05	4020B
51-03009A07	787
51-03009A08	1239
51-04001-01	109
51-04488D03	727
51-06002-00	610
51-08001-11	519
51-4	157
51-13-14	177
51-47-20	128
51-47-21	159
51-47-23	123A
51-47-24	123A
51-47-28	519
51-47-34	234
51-1056FA01	722
51-1056GA01	722
51-1059A01	723
51-1059YA01	723
51-1063A01	708
51-3753A11	712
51-10276A01	704
51-10302A01	703A
51-10382A	718
51-10382A01	722
51-10393A01	748
51-10408A01	710
51-10422A	718
51-10422A01	718
51-10422A02	718
51-10425A01	798
51-10432A01	717
51-10437A01	718
51-10522A01	771
51-10534A01	755
51-10534A03	755
51-10534A04	755
51-10541A01	917
51-10542A	771
51-10542A01	767
51-10559A01	722
51-10566A01	722
51-10566A02	720
51-10592A01	722
51-10594A01	723
51-10594C01	723
51-10600A	753
51-10600A01	753
51-10611A09	760
51-10611A10	762
51-10611A11	7400
51-10611A12	7404
51-10611A15	7450
51-10611A16	7475
51-10617A01	718
51-10619A01	723
51-10631A01	708

@, * — See special notes on inside back cover.

To Be Replaced	ECG Replacement
51-10636A	796
51-10636A01	796
51-10637A01	781
51-10638A01	789
51-10650A01	778
51-10655A01	798
51-10655A05	749
51-10655A13	748
51-10655A13	712
51-10655A17	4001B
51-10655A18	4011B
51-10655A19	4013B
51-10655B01	798
51-10655B13	712
51-10655B13	
51-10655C05	749
51-10658A01	788
51-10658A02	788
51-10658A03	788
51-10672A	736
51-10672A01	736
51-10678A01	789
51-10679A13	748
51-10711A01	743
51-10711A02	743
51-10711-A02	743
51-10715A01	941M
51-13747A01	529
51-13747A02	529
51-13747A03	529
51-13753A01	1196
51-13753A02	1164
51-13753A03	1161
51-13753A04	1162
51-13753A06	1173
51-13753A07	712
51-13753A08	1168
51-13753A09	712
51-13753A1	1164
51-13753A11	712
51-13753A18	1173
51-13753A19	797
51-13753A20	1176
51-25789H	909
51-33801A01	712
51-40464P01	801
51-41850J01	1006
51-42211P01	1170
51-42908J01	801
51-43639B02	755
51-43684B	735
51-43684B01	755
51-43684B02	755
51-43684B0P	755
51-43684B0P	751
51-44789J01	1234
51-44789J02	1234
51-44837J04	1239
51-70177A01	798
51-70177A02	748
51-70177A03	738
51-70177A05	749
51-70177A07	767
51-70177B02	748
51-84320A09	796
51-84320A16	912
51-84320A32	916
51-90305A04	1186
51-110276A01	704
51-42908501	801
51-43639802	755
51A180-4	161
51A524004-01	941D
51C43684B	735
51C43684B01	755
51C43684B02	755
51D0177A02	748
51D170	102
51D176	102A
51D188	100
51D189	100
51D70177A01	798
51D70177A02	748
51D70177A03	738
51D70177B02	748
51G10679A03	738
51G10679A13	748
51GX3	120
51GX14	120
51IN60P	109
51IS34S	109
51M33801A01	1162
51M70177A01	798
51M70177A02	748
51M70177A03	738
51M70177A05	749
51M70177A07	767
51M70177B01	798
51M70177B02	748
51N3M	180
51P2	126
51P4	126
51R04488D03	727
51R8432A09	796
51R40000S13	1232
51R84320A	1115A
51R84320A02	724
51R84320A03	912
51R84320A05	912
51R84320A09	796
51R84320A16	912
51R84320A32	916

To Be Replaced	ECG Replacement
51S1S34	109
51S10G55A13	748
51S1056FA01	722
51S1056GA01	722
51S10072A01	736
51S10276A01	704
51S10302A01	703A
51S10382A	718
51S10382A01	718
51S10393A01	748
51S10408A01	710
51S10422A	718
51S10422A01	718
51S10425A01	798
51S10432A01	717
51S10437A01	718
51S10534A01	755
51S10534A03	755
51S10534A04	735
51S10536A01	912
51S10541A01	917
51S10542A01	771
51S10553A01	917
51S10559A	722
51S10559A01	722
51S10566A01	722
51S10566A02	722
51S10592A01	722
51S10594A01	723
51S10600A	753
51S10600A01	753
51S10611A09	760
51S10611A10	762
51S10611A11	7400
51S10611A12	7404
51S10611A15	7450
51S10611A16	7475
51S10617A01	718
51S10619A01	723
51S10631A01	708
51S10636A	796
51S10636A01	796
51S10637A01	781
51S10638A01	789
51S10650A01	778
51S10655A01	798
51S10655A01-3	798
51S10655A03	738
51S10655A03A	738
51S10655A05	749
51S10655A17	4001B
51S10655A18	4011B
51S10655A19	4013B
51S10655B01	798
51S10655B03	738
51S10655B13	712
51S10655C05	749
51S10658A01	788
51S10672A	736
51S10672A01	736
51S10711A01	743
51S10715A01	941M
51S10830A	1115
51S13747A01	529
51S13747A02	529
51S13747A03	529
51S13753A01	1196
51S13753A02	1164
51S13753A03	1161
51S13753A06	1173
51S13753A07	712
51S13753A08	1168
51S13753A09	712
51S13753A1	1164
51S13753A10	1164
51S13753A11	712
51S44789J01	1234
51S70177A01	798
51S110276A01	704
51Z6	5111A
51Z6A	5111A
52-010-106-0	294
52-010-109-0	288
52-010-151-0	282
52-020-108-0	123A
52-020-158-0	123A
52-020-166-0	229
52-020-167-0	229
52-020-168-0	199
52-020-169-0	229
52-020-173-0	299
52-025-004-0	223
52-025-006-0	152
52-040-009-0	1003
52-040-010-0	1006
52-040-015-0	1135
52-045-001-0	1000
52-050-009-0	612
52-050-021-0	109
52-051-008-0	109
52-051-009-0	519
52-051-017-0(Germanium)	109
52-051-017-0(Silicon)	177
52-052-004-0	110
52-053-005-0	147A
52-053-013-0	139A
52-053-017-0	139A
52-4	157
52A011	116
52A011-1	125
52A4	177
52BBIA	116
52C04	102A
52D189	158

To Be Replaced	ECG Replacement
52DS-18	116
52SD1	116
52Z6	5173A
52Z6A	5173A
53-0051-2	116
53-0082-3	125
53-0082-1003	117
53-0086-1	116
53-0088-1	116
53-0088-2	117
53-0088-3	125
53-0088-1002	125
53-0088-1003	125
53-0088-1004	125
53-0094-1	116
53-0095-1	116
53-0098-1	116
53-0099-1	116
53-0099-3	116
53-0099-4	116
53-0106-1	116
53-0106-1001	125
53-0109-1	116
53-0111-1	117
53-0111-1001	125
53-0113-1	116
53-0119-1	503
53-0120-1	116
53-0122-1	117
53-0132-1	118
53-0136T	125
53-1086	116
53-1110	123A
53-1173	172A
53-1362	186
53-1487	1113
53-1516	159
53-1517	5455
53-1519	109
53-1967	186
53A001-1	109
53A001-2	110
53A001-3	116
53A001-4	125
53A001-5	5071A
53A001-9	116
53A001-10	142A
53A001-12	116
53A001-32	177
53A001-33	144A
53A001-34	125
53A001-35	116
53A001-36	177
53A002-1	116
53A006-1	109
53A008-1	109
53A009-1	113
53A0081	109
53A010-1	116
53A014-1	506
53A015-1	506
53A017-1	506
53A018-1	178
53A019-1	177
53A020-1	177
53A022-2	109
53A022-3	178MP
53A022-4	116
53A022-5	506
53A022-6	139A
53A022-7	139A
53A022-10	502
53A030-1	177
53B001-1	109
53B001-2	109
53B001-3	109
53B001-5	116(2)
53B001-6	116
53B001-7	177
53B003-1	116
53B003-2	116(2)
53B004-1	109
53B005-2	109
53B007-1	109
53B008-1	112
53B010-1	113
53B010-2	113
53B010-3	116
53B010-4	116
53B010-5	156
53B010-6	177
53B010-7	110
53B010-8	506
53B010-9	507
53B011-1	116(3)
53B011-2	116
53B011-3	118
53B012-1	165
53B013-1	177
53B014-1	177
53B015-1	138A
53B017-1	174
53B018-1	166
53B019-1	502
53B019-2	116
53B019-3	113
53B020-2	116
53C001-1	109
53C002-1	169
53C003-1	116
53C005-3	116
53C006-1	109
53C006-2	109
53C006-52	109
53C007-1	116

To Be Replaced	ECG Replacement
53C008-1	178MP
53C009-1	116
53C009-2	109
53C011-4	502
53C012-1	116
53C013-1	134A
53C014-1	116
53C015-1	116
53C016-1	116
53C017-1	116
53C020-1	109
53C021-1	169
53C022-1	116
53CD01-1	109
53D001-4	177
53D001-7	116
53D001-8	177
53D002-1	109
53D002-2	109
53D003-1	116
53D003-2	116
53E001-1	109
53E003-1	109
53E003-2	177
53E006-1	109
53E010-1	116
53E011-1	166
53E011-2	137A
53F001-1	116
53F002-1	116
53H001-1	116
53H001-2	109
53J001-1	156
53J002-1	156
53J002-2	117
53J003-1	116
53J003-2	177
53J004-1	137A
53J004-2	143A
53J004-3	138A
53K001-2	109
53K001-4	5070A
53K001-5	109
53K001-6	116
53K001-7	116
53K001-8	116
53K001-9	117
53K001-11	116
53K001-14	139A
53K001-15	614
53K001-17	614
53K001-18	139A
53L001-5	506
53L001-14	506
53L001-15	177
53N001-2	116
53N001-3	116
53N001-4	5080A
53N001-5	177
53N001-7	109
53N001-9	5081A
53N002-2	116
53N003-1	109
53N003-2	109
53N003-3	110
53N004-5	109
53N004-6	109
53N004-7	116
53N004-8	116
53N004-9	116
53N004-10	110
53N004-11	109
53N004-12	177
53N004-14	109
53N49	105
53P151	123
53P153	121
53P157	102
53P158	123
53P159	123
53P161	123
53P162	123
53P163	123
53P165	123
53P166	129
53P169	128
53P170	129
53T001-1	109
53T001-3	116
53T001-4	109
53T001-5	109
53T001-6	109
53T001-7	177
53U001-1	109
53U001-2	177
53V001-2	109
53W001-2	614
53W001-5	177
53W001-6	116
53W001-7	519
53Y001-0	116
53Y001-1	116
53Z6	5174A
53Z6A	5174A
54	108
54-1	123A
54A	123A
54B	123A
54BLK	108
54BLU	123A
54BRN	108
54C	123A
54D	123A
54E	287
54F	123A

To Be Replaced	ECG Replacement
54GRN	123A
54ORN	108
54RED	108
54V001-2	109
54WHT	123A
54YEL	123A
54Z6	5175A
54Z6A	5175A
55-001	506
55-0014	9923
55-006406-1	123AP
55-641	172A
55-642	128
55-643	129
55-1016	102A
55-1026	123A
55-1027	103A
55-1029	158
55-1031	158
55-1032	103A
55-1034	123A
55-1082	123A
55-1083	159
55-1083A	159
55-1084	128
55-1085	159
55-1085A	159
55-152579	159
55-509276-2	218
55-509276-4	218
55P2	126
55P3	126
55Z4	140A
55Z6	5176A
55Z6A	5176A
56-1	109
56-2	109
56-3	109
56-4	109
56-5	177
56-6	5071A
56-8	109
56-10	109
56-11	109
56-13	148A
56-15	506
56-16	135A
56-18	151A
56-19	139A
56-20	109
56-21	112
56-24	177
56-25	145A
56-26	109
56-27	177
56-28	177
56-29	151A
56-31	138A
56-32	143A
56-33	117
56-35	123A
56-36	5075A
56-44	135A
56-45	5079A
56-46	139A
56-47	146A
56-48	151A
56-50	5066A
56-51	142A
56-52	116
56-53	141A
56-54	5072A
56-55	5086A
56-56	519
56-57	142A
56-58	5071A
56-59	135A
56-62	139A
56-63	5071A
56-66	5086A
56-67	140A
56-68	5092A
56-70	134A
56-71	5071A
56-72	5087A
56-73	177
56-76	5084A
56-78	117
56-79	5084A
56-93-2867	177
56-97	138A
56-234	108
56-602	109
56-605	5077A
56-627	5074A
56-3792	177
56-4824	234
56-4826	229
56-4827	199
56-4828	234
56-4829	199
56-4830	293
56-4831	294
56-4832	177
56-4833	1073
56-4834	801
56-4835	614
56-4836	601
56-4837	142A
56-4839	116
56-4885	5072A
56-4886	109
56-5560	605
56-5561	143A
56-5562	177

To Be Replaced	ECG Replacement
56-5563	161
56-5564	123A
56-8086	107
56-8086A	107
56-8086B	107
56-8086C	107
56-8087	107
56-8087B	107
56-8087C	107
56-8088	107
56-8088A	107
56-8088C	107
56-8089	123A
56-8089A	123A
56-8089C	123A
56-8090	123A
56-8090A	123A
56-8090C	123A
56-8091	102A
56-8091A	102A
56-8091B	102A
56-8091C	102A
56-8091D	102A
56-8092	102A
56-8092A	102A
56-8092B	102A
56-8093	109
56-8094	103A&158(CP)
56-8095	110
56-8096	138A
56-8097	116
56-8098	159
56-8098A	159
56-8098B	159
56-8098C	159
56-8099	158
56-8100	103A
56-8100A	103A
56-8100B	103A
56-8100C	103A
56-8100D	103A
56-8101	158
56-8196	199
56-8197	199
56-8198	116
56-8199	116
56-86412-3	184
56A1-1	703A
56A3-1	712
56A4-1	714
56A5-1	715
56A6-1	790
56A7-1	147A
56A9-1	748
56A17-1	791
56A20-1	783
56A21-1	972
56A22-1	123A
56A22-1(Transistor)	123A
56A23-1	815
56A24-1	793
56A55	830
56B22-1	123A
56B22-1(Transistor)	123A
56C1-1	703A
56C3-1	712
56C4-1	714
56C5-1	790
56C6-1	790
56C7-1	147A
56C9-1	748
56D1-1	703A
56D3-1	712
56D4-1	714
56D5-1	715
56D6-1	790
56D8-1	814
56D9-1	748
56D17-1	791
56D20-1	783
56D21-1	972
56D23-1	815
56D24-1	793
56D55	830
56L101	714
56L102	715
56L103	790
56P1	160
56P2	160
56P3	160
56P4	160
56P4P	160
56Z6	5116A
56Z6A	5116A
57-0006	116
57-0004503	123A
57-0005452	123A
57-0005503	123A
57-000901504	123A
57-01491-B	123A
57-01491-C	128
57-01494C	128
57-1	116
57-2	116
57-6	116
57-12	116
57-13	116
57-15	116
57-17	116
57-18	5980
57-20	116
57-21	116
57-22	116
57-23	116
57-24	116

To Be Replaced	ECG Replacement
57-25	117
57-26	117
57-27	116
57-28	116
57-29	117
57-31	116
57-32	113
57-33	116
57-38	116(3)
57-39	5524
57-42	156
57-42A	156
57-43	117
57-46	116
57-49	117
57-52	173BP
57-55	5402
57-56	173BP
57-58	116
57-59	116
57-60	116
57-61	231
57-62	230
57-64	125
57-65	116
57-83	532
57-90	530
57-98	530
57-4015-27	102A
57-4015-28	158
57-4018-60	130
57A1-1	109
57A1-2	109
57A1-3	103A
57A1-4	103A
57A1-5	103A
57A1-6	103A
57A1-7	158
57A1-8	102A
57A1-9	160
57A1-10	160
57A1-11	102
57A1-12	160
57A1-13	160
57A1-14	102A
57A1-15	160
57A1-16	160
57A1-17	158
57A1-18	158
57A1-19	158
57A1-20	158
57A1-21	158
57A1-22	160
57A1-23	102A
57A1-24	160
57A1-25	160
57A1-26	102A
57A1-27	102A
57A1-28	102A
57A1-30	160
57A1-31	160
57A1-32	160
57A1-33	160
57A1-34	102A
57A1-35	160
57A1-36	160
57A1-37	160
57A1-38	158
57A1-40	102A
57A1-41	160
57A1-42	158
57A1-43	102A
57A1-44	102A
57A1-45	160
57A1-46	160
57A1-47	160
57A1-48	160
57A1-49	160
57A1-50	160
57A1-51	123A
57A1-52	106
57A1-53	102A
57A1-54	109
57A1-55	123A&159
57A1-56	158
57A1-57	160
57A1-58	102A
57A1-59	102A
57A1-60	158
57A1-61	160
57A1-62	109
57A1-63	117
57A1-64	109
57A1-65	112
57A1-66	102A
57A1-67	160
57A1-68	102A
57A1-69	160
57A1-70	102A
57A1-71	102A
57A1-72	160
57A1-73	160
57A1-74	160
57A1-75	123A
57A1-76	159
57A1-76A	159
57A1-77	158
57A1-78	103A
57A1-79	102A
57A1-80	160
57A1-81	160
57A1-82	102A
57A1-83	102A
57A1-84	160
57A1-85	160

To Be Replaced	ECG Replacement
57A1-86	160
57A1-87	160
57A1-89	160
57A1-90	102A
57A1-91	102A
57A1-92	102A
57A1-93	102A
57A1-94	160
57A1-95	102A
57A1-96	160
57A1-97	102A
57A1-98	160
57A1-99	160
57A1-100	160
57A1-101	160
57A1-102	160
57A1-103	160
57A1-104	102A
57A1-105	102A
57A1-106	102A
57A1-107	160
57A1-108	160
57A1-109	160
57A1-110	160
57A1-111	102A
57A1-112	160
57A1-113	160
57A1-114	160
57A1-115	160
57A1-116	102A
57A1-117	102A
57A1-118	102A
57A1-119	121
57A1-120	160
57A1-121	102A
57A1-122	154
57A1-123	123A
57A1-124	123A
57A2-1	126
57A2-15	102A
57A2-19	126
57A2-22	160
57A2-23	102A
57A2-24	102A
57A2-25	158
57A2-26	160
57A2-27	123A
57A2-28	123A
57A2-29	102A
57A2-30	160
57A2-31	160
57A2-32	102A
57A2-33	102A
57A2-34	102A
57A2-35	160
57A2-36	102A
57A2-37	160
57A2-38	128
57A2-39	102A
57A2-40	160
57A2-41	160
57A2-42	160
57A2-43	102A
57A2-44	102A
57A2-45	102A
57A2-46	102A
57A2-47	175
57A2-48	160
57A2-49	102A&103A
57A2-50	160
57A2-51	160
57A2-52	102A
57A2-58	175
57A2-59	123A
57A2-60	102A
57A2-61	158
57A2-62	123A
57A2-63	123A
57A2-64	123A
57A2-65	160
57A2-66	160
57A2-67	160
57A2-68	160
57A2-70	159
57A2-70A	159
57A2-71	159
57A2-71A	159
57A2-72	102A
57A2-73	123A
57A2-75	160
57A2-77	160
57A2-78	102A
57A2-80	160
57A2-83	102A
57A2-84	175
57A2-85	123A
57A2-87	123A
57A2-88	102A
57A2-89	160
57A2-90	160
57A2-93	160
57A2-97	123A
57A2-101	123A
57A2-102	123A
57A2-103	123A
57A2-104	160
57A2-105	160
57A2-113	123A
57A2-116	123A
57A2-126	123A
57A2-149	160
57A2-153	123A
57A2-157	160
57A2-158	160
57A2-159	160

To Be Replaced	ECG Replacement
57A2-192	123A
57A2.4	102A
57A3-1	123A&159
57A3-2	123A&159
57A3-3	102A&103A
57A3-4	102A
57A3-5	102A
57A3-6	102A
57A3-7	104MP
57A3-8	104MP
57A3-9	104MP
57A3-10	104MP
57A3-11	104MP
57A3-12	121MP
57A3-13	123A&159
57A4-1	121
57A4-2	121
57A4-4	121
57A5	103
57A5-1	126
57A5-2	126
57A5-3	102A
57A5-4	126
57A5-5	102A
57A5-6	108
57A5-7	108
57A5-8	108
57A5-9	126
57A5-10	126
57A6-1	102
57A6-2	121
57A6-3	121
57A6-4	123A
57A6-5	103A
57A6-6	103
57A6-6A	100
57A6-6B	100
57A6-6C	100
57A6-7	123
57A6-8	121
57A6-9	123A
57A6-10	124
57A6-11	123A
57A6-12	121
57A6-14	124
57A6-15	129
57A6-16	126
57A6-17	123
57A6-18	123A&159
57A6-19(Diode)	120
57A6-19(Transistor)	123
57A6-20	103A
57A6-21	103A
57A6-22	102
57A6-23	121
57A6-24	124
57A6-25	102A
57A6-26	129
57A6-26A	129
57A6-27	123
57A6-28	123A&159
57A6-29	123
57A6-30	123
57A6-31	129
57A6-31A	129
57A6-32	123
57A6-33	129
57A6-33A	129
57A6-34	128&129
57A6(NPN)	199
57A6(PNP)	102
57A7-1	108
57A7-2	108
57A7-3	108
57A7-4	108
57A7-5	108
57A7-6	108
57A7-7	108
57A7-8	128
57A7-9	123A
57A7-10	123A
57A7-15	123A
57A7-17	123A
57A7-18	123A
57A7-20	123A
57A9-1	160
57A9-2	121
57A10-1	108
57A10-2	108
57A10A-8-6	108
57A11-1	123A
57A12-1	154
57A12-2	154
57A12-3	175
57A12-4	128
57A12-5	175
57A14-1	128
57A14-2	128
57A14-3	128
57A15-1	123A
57A15-2	123A
57A15-3	123A
57A15-4	123A
57A15-5	159
57A15-50	159
57A16	126
57A16-1	123A
57A19	159
57A19-1	159
57A19-1A	159
57A19-2	159
57A19-3	159
57A19-10	159
57A19-20	159
57A19-30	159

To Be Replaced	ECG Replacement
57A20-1	108
57A21	107
57A21-1	108
57A21-2	108
57A21-3	108
57A21-4	108
57A21-5	108
57A21-6	108
57A21-7	108
57A21-8	123A
57A21-9	108
57A21-10	108
57A21-12	107
57A21-13	107
57A21-14	107
57A21-15	108
57A21-16	161
57A21-17	161
57A21-18	161
57A21-45	107
57A22-1	179
57A22-2	179
57A23	129
57A23-1	129
57A23-2	129
57A23-3	129
57A24	161
57A24-1	123A
57A24-2	123A
57A24-3	123A
57A24-4	123A
57A27-1	123A
57A27-2	108
57A28	704
57A29	706
57A29-1	706
57A29-2	706
57A31-1	132
57A31-4	133
57A32-1	724
57A32-2	1142
57A32-3	1039
57A32-10	722
57A32-11	1075A
57A32-16	722
57A32-19	1103
57A32-21	799
57A32-22	720
57A32-25	1124
57A32-27	1124
57A32-28	1142
57A32-29	1142
57A32-32	801
57A33-1	123A&159
57A68	102A
57A100-3	102A&103A
57A100-5	102A&103A
57A100-7	102A
57A100-11	131
57A100-385	102A&103A
57A101-4	108
57A102-4	161
57A103-4	161
57A104-1	154
57A104-2	154
57A104-3	154
57A104-4	154
57A104-5	154
57A104-6	154
57A104-7	154
57A104-8	154
57A104-8-6	128
57A105-12	123A
57A106-12	159
57A107-1	108
57A107-2	108
57A107-3	108
57A107-4	108
57A107-5	108
57A107-6	108
57A107-8	108
57A108-1	106
57A108-2	106
57A108-3	106
57A108-4	106
57A108-5	106
57A108-6	106
57A108-6-8	129
57A108-6A	159
57A108-7	106
57A108-8	106
57A109-9	128
57A110-9	129
57A111-9	128&129
57A112-9	129
57A112-9A	129
57A113-9	128
57A114-9	129
57A114-9A	129
57A115-9	129
57A115-9A	129
57A116-9	129
57A116-9A	129
57A117-9	123A
57A118-12	123A
57A119-2	161
57A119-12	123A
57A120-12	123A
57A121-9	123A
57A122-9	129
57A122-9A	159
57A123-10	175
57A124-10	104
57A125-9	123A
57A126	102

To Be Replaced	ECG Replacement
57A126-12	107
57A127	157
57A128-9	128
57A129-9	128
57A130	126
57A130-9	129
57A130-9A	159
57A131	126
57A131-10	128
57A132	126
57A132-9	160
57A132-10	129
57A132-29	1142
57A133-12	159
57A134-12	108
57A135-12	123A
57A136-1	154
57A136-2	154
57A136-3	154
57A136-4	154
57A136-5	154
57A136-6	154
57A136-7	154
57A136-8	154
57A136-9	154
57A136-10	154
57A136-11	154
57A136-12	123A
57A137-12	159
57A137-12A	159
57A138-4	319
57A138-4(3RD IF)	233
57A138-4-6	319
57A138-4(Last IF)	233
57A139-1	161
57A139-2	161
57A139-3	161
57A139-4	319
57A139-4-6	108
57A140-12	123A
57A141-1	108
57A141-2	108
57A141-3	108
57A141-4	161
57A142-1	108
57A142-2	199
57A142-3	108
57A142-4	233
57A142-4(3RDIF)	233
57A142-7	161
57A143	102
57A143-1	108
57A143-2	108
57A143-3	108
57A143-4	108
57A143-5	108
57A143-6	108
57A143-7	108
57A143-8	108
57A143-9	108
57A143-10	108
57A143-11	108
57A143-12	199
57A144-12	199
57A145-12	159
57A145-12A	159
57A146-12	108
57A147-12	159
57A147-12A	159
57A148-1	102A
57A148-2	129
57A148-3	129
57A148-4	129
57A148-5	129
57A148-6	129
57A148-7	129
57A148-8	129
57A148-9	129
57A148-10	129
57A148-11	129
57A148-12	159
57A148-12A	129
57A149-12	132
57A150-12	132
57A151-6	108
57A152-1	123A
57A152-2	123A
57A152-3	123A
57A152-4	123A
57A152-5	123A
57A152-6	123A
57A152-7	123A
57A152-8	123A
57A152-9	123A
57A152-10	123A
57A152-11	123A
57A152-12	108
57A153-1	123A
57A153-2	123A
57A153-3	123A
57A153-4	123A
57A153-5	123A
57A153-6	123A
57A153-7	123A
57A153-8	123A
57A153-9	123A
57A155-10	175
57A156	128
57A156-9	123A
57A157	159
57A157-9	159
57A157-9A	159
57A157-90	159
57A158-1	124
57A158-2	124

To Be Replaced	ECG Replacement
57A158-3	124
57A158-5	124
57A158-6	124
57A158-7	124
57A158-8	124
57A158-9	124
57A158-10	124
57A159-12	159
57A159-12A	159
57A160-1	108
57A160-2	108
57A160-3	108
57A160-4	108
57A160-8	154
57A164-4	161
57A166-12	123A
57A167-9	192
57A168	126
57A168-9	193
57A169	102
57A170	102
57A172-8	190
57A174-8	159
57A175-12	159
57A177-12	161
57A178-12	159
57A179-4	161
57A180	160
57A180-4(3RDIF)	233
57A181-12	123A
57A182-12	123A
57A184	160
57A184-12	123A
57A185-12	159
57A186	126
57A186-11	165
57A186-12	165
57A187	160
57A187-12	291
57A188	160
57A188-12	292
57A189	102
57A189-8	159
57A191-12	123A
57A192-10	124
57A193-11	171
57A194-11	154
57A194-11(Pulse)	154
57A194-12	5404
57A195-10	124
57A196-10	283
57A197-12	159
57A198-11	165
57A199-4	123A
57A199-11	165
57A200-12	123A
57A201-13	123A
57A201-14	159
57A202-13	123A
57A203-14	123A
57A204-14	123A
57A205-14	153
57A206-14	153
57A207-8	154
57A208-8	171
57A211-8	190
57A213-11	165
57A214-12	188
57A215-12	159
57A216-12	159
57A219-14	289
57A220-14	290
57A235-12	159
57A236-11	171
57A240-14	290
57A241-14	289
57A243-10	5404
57A244-14	196
57A245-14	197
57A249-4	161
57A250-14	152
57A251-14	153
57A252-1	123A
57A253-14	123A
57A256-10	283
57A256-10(Audio)	130
57A256-10(Horiz.)	283
57A258-8	159
57A259-10	5404
57A261-10	154
57A263-11	238
57A265-4	123A
57A267-4	222
57A268-9	123A
57A273-14	270
57A274-14	269
57A277-14	153
57A278-14	152
57A279-14	152
57A280-14	289
57A281-14	290
57A282-12	123A
57A283-11	154
57A286-10	152
57A290-12	312
57A295-8	171
57A296-10	291
57A305-12	159
57A1127	102A
57A1130	160
57A1131	160
57A1132	160
57A1143	102A
57A1186	160
57A2141-14	128

To Be Replaced	ECG Replacement
57B2-1	160
57B2-2	160
57B2-3	158
57B2-4	158
57B2-5	103
57B2-6	102A
57B2-7	158
57B2-8	103A
57B2-9	160
57B2-10	158
57B2-11	160
57B2-12	102A
57B2-13	160
57B2-14	160
57B2-15	158
57B2-16	158
57B2-17	160
57B2-18	160
57B2-19	160
57B2-20	160
57B2-21	158
57B2-22	160
57B2-23	102A
57B2-24	102A
57B2-25	158
57B2-26	160
57B2-27	123A
57B2-28	123A
57B2-29	102A
57B2-30	160
57B2-31	160
57B2-32	102A
57B2-33	102A(2)
57B2-34	102A
57B2-35	160
57B2-36	102A
57B2-37	160
57B2-38	128
57B2-39	102A
57B2-40	160
57B2-41	160
57B2-42	160
57B2-43	102A
57B2-44	102A
57B2-45	102A
57B2-46	102A(2)
57B2-47	175
57B2-48	160
57B2-49	102A&103A(CP)
57B2-50	160
57B2-51	160
57B2-52	102A
57B2-58	175
57B2-59	123A
57B2-60	102A
57B2-61	158(2)
57B2-62	123A
57B2-63	123A
57B2-64	123A
57B2-65	160
57B2-66	160
57B2-67	160
57B2-68	160
57B2-70	159
57B2-70A	159
57B2-71	159
57B2-71A	159
57B2-72	102A
57B2-73	123A
57B2-75	160
57B2-77	160
57B2-78	102A
57B2-80	160
57B2-83	102A
57B2-84	175
57B2-85	123A
57B2-87	123A
57B2-88	102A
57B2-89	160
57B2-90	160
57B2-93	160
57B2-97	123A
57B2-101	123A
57B2-102	123A
57B2-103	123A
57B2-104	160
57B2-105	160
57B2-113	123A
57B2-116	123A
57B2-126	123A
57B2-149	160
57B2-153	123A
57B2-157	160
57B2-158	160
57B2-159	160
57B2-192	123A
57B3-1	123A&159
57B3-2	123A&159
57B3-3	102A&103A(CP)
57B3-4	102A
57B3-5	102A
57B3-6	102A
57B3-7	104MP
57B3-8	104MP
57B3-9	104MP
57B3-10	104MP
57B3-11	104MP
57B3-12	121MP
57B3-13	123A&159
57B4-1	121
57B4-2	121
57B4-4	121
57B6	102
57B21	108
57B21-1	108

To Be Replaced	ECG Replacement
57B21-2	108
57B21-3	108
57B21-4	108
57B21-5	108
57B21-6	161
57B21-7	161
57B21-9	107
57B21-12	108
57B21-13	108
57B21-14	108
57B21-15	108
57B21-16	108
57B21-17	161
57B21-18	108
57B100-3	102A&103A(CP)
57B100-5	102A&103A(CP)
57B100-7	102A
57B100-11	131
57B100-385	102A&103A
57B101-4	108
57B102-4	161
57B103-4	161
57B104-8	154
57B105-12	123A
57B106-12	159
57B107-8	123A
57B108-6	159
57B108-6A	159
57B109-9	128
57B110-9	129
57B111-9	128&129(CP)
57B112-9	129
57B112-9A	129
57B113-9	128
57B114-9	129
57B114-9A	129
57B115-9	129
57B115-9A	129
57B116-9	129
57B116-9A	129
57B117-9	123A
57B118-12	123A
57B119-2	161
57B119-12	123A
57B120-12	123A
57B121-9	123A
57B122-9	159
57B122-9A	159
57B123-10	175
57B124-10	104
57B125-9	123A
57B126-12	123A
57B128-9	128
57B129-9	123A
57B130-9	159
57B130-9A	159
57B131-10	152
57B132-10	153
57B133-12	159
57B134-12	108
57B135-12	123A
57B136-1	154
57B136-2	154
57B136-3	154
57B136-4	154
57B136-5	154
57B136-6	154
57B136-7	154
57B136-8	154
57B136-9	154
57B136-10	154
57B136-11	154
57B136-12	123A
57B137-12	159
57B137-12A	159
57B138-4	319
57B138-4(Last IF)	233
57B139-4	319
57B140-12	123A
57B141-1	108
57B141-2	108
57B141-3	108
57B141-4	161
57B142-1	108
57B142-2	108
57B142-3	108
57B142-4	233
57B143-1	108
57B143-2	108
57B143-3	108
57B143-4	108
57B143-5	108
57B143-6	108
57B143-7	108
57B143-8	108
57B143-9	108
57B143-10	108
57B143-11	108
57B143-12	123A
57B144-12	123A
57B145-12	159
57B145-12A	159
57B146-12	123A
57B147-12	159
57B147-12A	159
57B148-1	129
57B148-2	129
57B148-3	129
57B148-4	129
57B148-5	129
57B148-6	129
57B148-7	129
57B148-8	129
57B148-9	129
57B148-10	129

To Be Replaced	ECG Replacement
57B148-11	129
57B148-12	129
57B148-12A	129
57B149-12	132
57B150-12	132
57B151-6	108
57B152-1	123A
57B152-2	123A
57B152-3	123A
57B152-4	123A
57B152-5	123A
57B152-6	123A
57B152-7	123A
57B152-8	123A
57B152-9	123A
57B152-10	123A
57B152-11	123A
57B152-12	108
57B153-1	123A
57B153-2	123A
57B153-3	123A
57B153-4	123A
57B153-5	123A
57B153-6	123A
57B153-7	123A
57B153-8	123A
57B153-9	123A
57B155-10	175
57B156-9	123A
57B157-9	159
57B157-9A	159
57B158-1	124
57B158-2	124
57B158-3	124
57B158-4	124
57B158-5	124
57B158-6	124
57B158-7	124
57B158-8	124
57B158-9	124
57B158-10	175
57B159-12	159
57B159-12A	159
57B160-1	108
57B160-2	108
57B160-3	108
57B160-4	108
57B160-5	108
57B160-6	108
57B160-7	108
57B160-8	108
57B163-12	129
57B163-12A	129
57B165-11	128
57B166-12	108
57B167-9	128
57B168	102A
57B168-9	129
57B169	102A
57B169-12	132
57B170	102A
57B170-9	128
57B171-9	129
57B172-8	190
57B175-9	130
57B175-9A	130
57B175-12	159
57B178-12	159
57B179-4	161
57B180	160
57B180-4	233
57B181-12	194
57B182-12	123A
57B184	160
57B184-12	123A
57B185-12	159
57B186-11	238
57B187	160
57B187-12	291
57B188	160
57B188-12	292
57B189-8	159
57B191-12	123A
57B192-10	124
57B193-11	171
57B194-11	123A
57B194-12	154
57B195-10	124
57B196-10	283
57B197-12	159
57B198-11	165
57B199-11	165
57B200-12	123A
57B201-14	159
57B202-13	123A
57B203-14	199
57B205-14	152
57B206-14	153
57B207-8	154
57B208-8	171
57B211-8	190
57B213-11	165
57B214-12	188
57B215-12	159
57B216-12	159
57B219-14	289
57B220-14	290
57B235-12	159
57B236-11	171
57B240-14	290
57B241-14	289
57B243-10	5404
57B244-14	196
57B245-14	197
57B249-4	161

To Be Replaced	ECG Replacement
57B250-14	152
57B251-14	153
57B253-14	123A
57B256-10	283
57B258-8	159
57B261-10	154
57B263-11	238
57B265-4	123A
57B267-4	222
57B268-4	123A
57B268-9	123A
57B273-14	270
57B274-14	269
57B277-14	153
57B278-14	152
57B279-14	152
57B280-14	289
57B281-14	290
57B282-12	123A
57B283-11	154
57B286-10	152
57B290-12	312
57B295-8	171
57B296-10	291
57B1127	102A
57B1130	160
57B1131	160
57B1143	102A
57B1186	160
57C5	103
57C5-1	126
57C5-3	102A
57C5-4	126
57C5-5	102A
57C5-6	108
57C5-7	108
57C5-8	108
57C5-9	126
57C5-10	126
57C6	199
57C6-1	102
57C6-2	121
57C6-3	121
57C6-4	123A
57C6-5	103A
57C6-6	103
57C6-6A	100
57C6-6B	100
57C6-6C	100
57C6-7	123
57C6-8	121
57C6-9	123A
57C6-10	124
57C6-11	123A
57C6-12	121
57C6-14	124
57C6-15	129
57C6-16	126
57C6-17	123
57C6-18	123A&159
57C6-19	123
57C6-20	103A
57C6-21	103A
57C6-22	102
57C6-23	121
57C6-24	124
57C6-25	102A
57C6-26	129
57C6-26A	129
57C6-27	123
57C6-28	123A&159
57C6-29	123
57C6-30	123
57C6-31	129
57C6-31A	129
57C6-32	123
57C6-33	129
57C6-33A	129
57C6-34	128&129(CP)
57C7-1	108
57C7-2	108
57C7-3	108
57C7-4	108
57C7-5	108
57C7-6	108
57C7-7	108
57C7-8	128
57C7-9	123A
57C7-10	123A
57C7-15	123A
57C7-17	123A
57C7-18	123A
57C7-20	123A
57C9-2	121
57C10-1	108
57C10-2	108
57C11-1	123A
57C12-1	154
57C12-2	154
57C12-3	175
57C12-4	128
57C12-5	175
57C14-1	128
57C14-2	128
57C14-3	128
57C15-1	123A
57C15-2	123A
57C15-3	123A
57C15-4	123A
57C15-5	159
57C15-50	159
57C16	126
57C16-1	123A
57C19-1	159
57C19-1A	159

To Be Replaced	ECG Replacement
57C20-1	108
57C21	107
57C21-5	107
57C22-1	179
57C22-2	179
57C23	129
57C23-1	129
57C23-2	129
57C23-3	129
57C24-1	123A
57C24-2	123A
57C24-3	123A
57C24-4	123A
57C27-1	123A
57C27-2	108
57C28	704
57C29	706
57C29-1	706
57C29-2	706
57C68	102A
57C109-9	128
57C110-9	129
57C121-9	123A
57C122-9	129
57C142-4	161
57C148-12	129
57C148-12A	129
57C156-9	123A
57C157-9	159
57C157-90	159
57C164-4	161
57D1-1	109
57D1-2	109
57D1-3	103A
57D1-4	103A
57D1-5	103A
57D1-6	103A
57D1-7	158
57D1-8	102A
57D1-9	160
57D1-10	160
57D1-11	102
57D1-12	160
57D1-13	160
57D1-14	102A
57D1-15	160
57D1-16	160
57D1-17	158
57D1-18	158
57D1-19	158
57D1-20	158
57D1-21	158
57D1-22	160
57D1-23	102A
57D1-24	160
57D1-25	160
57D1-26	102A
57D1-27	102A
57D1-28	102A
57D1-30	160
57D1-31	160
57D1-32	160
57D1-33	160
57D1-34	102A
57D1-35	160
57D1-36	160
57D1-37	160
57D1-38	158
57D1-40	102A
57D1-41	160
57D1-42	158
57D1-43	102A
57D1-44	102A
57D1-45	160
57D1-46	160
57D1-47	160
57D1-48	160
57D1-49	160
57D1-50	160
57D1-51	123A
57D1-52	106
57D1-53	102A
57D1-54	109
57D1-55	123A&159
57D1-56	158
57D1-57	160
57D1-58	102A
57D1-59	102A
57D1-60	158
57D1-61	160
57D1-62	109
57D1-63	117
57D1-64	109
57D1-65	112
57D1-66	102A
57D1-67	160
57D1-68	102A
57D1-69	160
57D1-70	102A
57D1-71	102A
57D1-72	160
57D1-73	160
57D1-74	160
57D1-75	123A
57D1-76	159
57D1-76A	159
57D1-77	158
57D1-78	103A
57D1-79	102A
57D1-80	160
57D1-81	160
57D1-82	102A
57D1-83	102A
57D1-84	160
57D1-85	160

To Be Replaced	ECG Replacement
57D1-86	160
57D1-87	160
57D1-89	160
57D1-90	102A
57D1-91	102A
57D1-92	102A
57D1-93	102A
57D1-94	160
57D1-95	102A
57D1-96	160
57D1-97	102A
57D1-98	160
57D1-99	160
57D1-100	160
57D1-101	160
57D1-102	160
57D1-103	160
57D1-104	102A
57D1-105	102A
57D1-106	102A
57D1-107	160
57D1-108	160
57D1-109	160
57D1-110	160
57D1-111	102A
57D1-112	160
57D1-113	160
57D1-114	160
57D1-115	160
57D1-116	102A
57D1-117	102A
57D1-118	102A
57D1-119	121
57D1-120	160
57D1-121	102A
57D1-122	154
57D1-123	123A
57D1-124	123A
57D3-6	102
57D4-1	121
57D4-2	121
57D5-1	126
57D5-2	126
57D5-4	126
57D6-4	123A
57D6-10	124
57D6-12	121
57D6-19	123
57D9-1	160
57D9-2	121
57D14-1	123A
57D14-2	123A
57D14-3	123A
57D19	159
57D19-1	159
57D19-2	159
57D19-3	159
57D19-10	159
57D19-20	159
57D19-30	159
57D24	161
57D24-1	108
57D24-2	108
57D24-3	108
57D29-2	706
57D68	102
57D107-8	108
57D126	102
57D127	157
57D130	126
57D131	126
57D132	126
57D132-9	160
57D136-12	123A
57D143	102
57D156	102
57D168	126
57D169	102
57D170	102
57D180	100
57D184	100
57D186	126
57D187	126
57D189	102
57D1127	102
57D1130	160
57D1131	160
57D1132	160
57D1143	102
57D1186	160
57DG-23	121
57DG-32	121
57L1-1	160
57L1-2	160
57L1-3	160
57L1-4	160
57L1-6	102A
57L1-7	158(2)
57L1-8	102A
57L1-9	160
57L1-10	160
57L1-11	160
57L1-12	160
57L2-1	128
57L2-2	123A
57L3-1	123A
57L3-4	123A
57L5-1	104
57L103-13	717
57L105-12	128
57L106-9	133
57M1-1	160
57M1-2	160
57M1-3	160
57M1-4	160

To Be Replaced	ECG Replacement
57M1-5	102A
57M1-6	102A
57M1-7	158(2)
57M1-8	158
57M1-9	160
57M1-10	160
57M1-11	160
57M1-12	160
57M1-13	129
57M1-13A	129
57M1-14	123A
57M1-15	123A
57M1-16	103A
57M1-17	160
57M1-18	103A
57M1-19	123A
57M1-20	123A
57M1-21	129
57M1-21A	129
57M1-22	129
57M1-23	123A
57M1-24	123A
57M1-25	129
57M1-25A	129
57M1-26	123A
57M1-27	123A
57M1-28	123A
57M1-29	123A
57M1-30	123A
57M1-31	123A
57M1-32	123A
57M1-33	128
57M1-34	128
57M1-35	158
57M2-1	103A
57M2-2	103A
57M2-3	158
57M2-4	158
57M2-6	103A
57M2-7	128
57M2-8	158
57M2-9	103A
57M2-10	129
57M2-10A	129
57M2-11	128
57M2-14	128
57M2-15	129
57M2-15A	129
57M2-16	154
57M2-17	154
57M2-18	128
57M2-506	103A&158(CP)
57M3-1	130
57M3-1A	130
57M3-2	130
57M3-3	128
57M3-4	130
57M3-4A	130
57M3-5	175
57M3-6	130
57M3-6A	130
57M3-7	104
57M3-8	104
57M3-9N	155
57M3-9P	131
57M3-10N	155
57M3-10P	131
57M3-11	155
57M3-12	131
57P1	102
57S-06	5070A
57X11	505
57Z6	5178A
57Z6A	5178A
58-000516	724
58-1(Truetone)	123A
58B2-14	160
58T	457
58Z6	5180A
58Z6A	5180A
59B402781	9923
59B402787	9914
59B402788	9974
59E001-1	177
59P2C	102A
59Z6	5120A
59Z6A	5120A
60-211040	181
60C	116
60D	116
60DE10	125
60F1	5842
60F5	5862
60H	116
60H3P	5862
60H3PN	5863
60HF5	6020
60HF10	6022
60HF15	6026
60HF20	6026
60HF25	6030
60HF30	6030
60HF35	6034
60HF40	6034
60HF45	6038
60HF50	6038
60HF60	6040
60J1	5806
60J2	116
60J2P	5882
60J3P	5882
60JH3	6064
60L20	525
60LA	156
60M	116

To Be Replaced	ECG Replacement
60P19009	162
60P22204	191
60S5	5842
60T4	5400
60Z6	5182A
60Z6A	5182A
61-259	109
61-309-458	128
61-607	102A
61-608	102A
61-654	102A
61-655	102A
61-656	102A
61-746	123A
61-747	128
61-751	123A
61-754	123A
61-755	123A
61-756	117
61-782	121
61-813	128
61-814	123A
61-815	123A
61-820	117
61-926	117
61-928	102A
61-929	102A
61-1053-1	196
61-1130	102A
61-1131	102A
61-1215	102A
61-1320	116
61-1400	123A
61-1401	123A
61-1402	123A
61-1403	123A
61-1404	123A
61-1763	123A
61-1764	128
61-1765	116
61-1906	131
61-1907	102A
61-1934	102A
61-1935	102A
61-3096-90	197
61-7728	116
61-8968	119
61-8969	118
61-59395	109
61-260039	126
61-260039A	126
61-309449	130
61-309686	199
61-309687	128
61-309688	129
61-309689	152
61-309690	153
61A001-10	1082
61A001-11	1142
61A001-12	1052
61A023-2	1045
61A030-6	712
61A030-9	1083
61B002-1	160
61B003-1	126
61B004-1	102A
61B005-1	102A
61B006-1	102A
61B007-1	108
61B007-2	108
61B009-1	102A
61B0015-1	102A
61B015-1	102A
61B016-1	102A
61B017-1	102A
61B018-1	102A
61B019-1	102A
61B020-1	102A
61B021-1	102A
61B022-2	102A
61B022-3	102A
61B023-1	102A
61B026-1	102A
61B027-1	158
61B042-9	1003
61B1C	783
61B2Z	783
61B45-14	102A
61C001-1	123
61C002-1	102
61C003-1	102
61C004-1	128
61C005-1	121
61E01	5075A
61E02	5022A
61E03	5066A
61E04	5093A
61E05	5070A
61E06	5096A
61E07	5075A
61E08	147A
61E09	5090A
61E10	5010A
61E11	5082A
61E12	146A
61E13	5068A
61E14	5096A
61E15	5018A
61E16	5095A
61E17	5001A
61E18	5027A
61E19	5067A
61E20	146A
61E21	5129A
61E22	5029A

To Be Replaced	ECG Replacement
61E23	5010A
61E24	5028A
61E25	5014A
61E26	5031A
61E27	5012A
61E28	5141A
61E30	148A
61E31	5022A
61E32	5016A
61E33	5027A
61E34	5117A
61E35	5137A
61E36	137A
61E37	5077A
61E38	136A
61E39	5135A
61E40	5010A
61E41	135A
61E42	5071A
61E43	5006A
61E44	5115A
61J001-1	123A
61J002-1	123A
61J003-1	123A
61J004-1	102A
61J2	116
61K001-9	1011
61K001-10	801
61K001-12	1011
61K001-13	1185
61L001-3	1213
61L001-5	1257
61L001-6	1258
61L001-8	1251
61P1	126
61P1D	160
61P10	126
61T4	5401
61Z6	5122A
61Z6A	5183A
62-7567	123A
62-8781	160
62-10234	109
62-10655	109
62-12034	109
62-13258	102A
62-13259	103A
62-13261	116
62-13477	116
62-13494	102A
62-15318	109
62-15483	116
62-16013	113
62-16711	116
62-16712	113
62-16769	109
62-16841	109
62-16905	123A
62-16918	102A
62-16919	175
62-17232	112
62-17390	160
62-17391	160
62-17550	123A
62-18135	116
62-18337	113
62-18415	100
62-18416	100
62-18417	100
62-18418	160
62-18419	160
62-18420	102A
62-18421	102A
62-18422	160
62-18423	100
62-18424	100
62-18425	123A
62-18426	154
62-18427	104
62-18428	121
62-18429	179
62-18430	102A
62-18431	116
62-18434	116
62-18435	116
62-18436	116
62-18438	116
62-18641	123A
62-18642	123A
62-18643	123A
62-18782	177
62-18828	123A
62-19115	116
62-19260	112
62-19280	123A
62-19452	159
62-19516	123A
62-19548	123A
62-19581	107
62-19620	112
62-19734	113
62-19749	116
62-19814	116
62-19837	123A
62-19838	123A
62-19846	109
62-20154	159
62-20154A	159
62-20155	123A
62-20223	177
62-20240	123A
62-20241	123A
62-20242	123A
62-20243	123A
62-20244	159

To Be Replaced	ECG Replacement
62-20244A	159
62-20319	177
62-20360	123A
62-20437	177
62-20565	119
62-20597	177
62-20643	145A
62-21369	116
62-21496	123A
62-21552	177
62-21573	5103A
62-21574	5077A
62-21586	711
62-21587	712
62-22038	123A
62-22039	123A
62-22250	123A
62-22251	123A
62-22529	106
62-26597	177
62-26851	160
62A01	116
62A02	116
62A04	116
62A05	116
62A11868	123A
62A11871	159
62B046-1	152
62B046-2	152
62B046-3	152
62B046-4	152
62J2	116
62R2R	5944
62T4	5402
62VB10	5313
62Z6	5124A
62Z6A	5124A
63-3954	160
63-5058	5105A
63-7246	158
63-7247	102A
63-7248	103A
63-7396	102A
63-7397	102A
63-7398	102A
63-7399	102A
63-7420	102A
63-7421	123A
63-7433	116
63-7538	160
63-7541	160
63-7547	100
63-7548	160
63-7549	103A
63-7564	102A
63-7565	103A
63-7567	123A
63-7579	160
63-7580	160
63-7581	160
63-7582	160
63-7596	102A
63-7660	160
63-7670	123A
63-7871	102A
63-7872	102A
63-7873	102A
63-8119	160
63-8120	158
63-8376	160
63-8377	160
63-8378	160
63-8379	160
63-8380	102A
63-8381	109
63-8473	103A
63-8512	175
63-8555	123A
63-8590	121
63-8685	116
63-8699	160
63-8700	160
63-8701	123A
63-8702	123A
63-8703	102A
63-8704	102A
63-8705	103A
63-8706	121
63-8707	130
63-8707A	130
63-8819	117
63-8824	116
63-8825	5072A
63-8945	175
63-8954	160
63-8955	109
63-9072	160
63-9337	123A
63-9338	123A
63-9339	123A
63-9340	103A
63-9341	123A
63-9516	123A
63-9517	160
63-9518	123A
63-9519	102A
63-9520	102A
63-9521	102A
63-9523	109
63-9659	102A
63-9664	160
63-9665	160
63-9783	5072A
63-9787	117
63-9829	123A

To Be Replaced	ECG Replacement
63-9830	123A
63-9831	123A
63-9832	123A
63-9833	123A
63-9847	123A
63-9876	160
63-9877	160
63-9893	HiDiv-1
63-9894	HiDiv-1
63-9895	HiDiv-1
63-9896	HiDiv-1
63-9897	HiDiv-3
63-9898	HiDiv-3
63-9898-02	HiDiv-3
63-9941	160
63-9942	142A
63-10035	160
63-10036	160
63-10037	102A
63-10038	102A
63-10062	175
63-10064	116
63-10145	160
63-10146	160
63-10147	102A
63-10148	160
63-10149	160
63-10150	160
63-10151	102A
63-10152	102A
63-10153	102A
63-10154	102A
63-10156	102A
63-10158	102A
63-10159	102A
63-10188	123A
63-10195	160
63-10196	160
63-10200	100
63-10375	160
63-10376	160
63-10377	123A
63-10378	121
63-10383	103A
63-10384	158
63-10408	102A
63-10708	123A
63-10709	116
63-10725	123A
63-10732	123A
63-10733	123A
63-10734	123A
63-10735	123A
63-10736	123A
63-10737	123A
63-10739	109
63-10860	123A
63-11025	123A
63-11055	160
63-11073	158
63-11074	109
63-11143	123A
63-11144	102A
63-11147	5071A
63-11148	167
63-11215	117
63-11289	123A
63-11290	175
63-11291	116
63-11468	123A
63-11469	123A
63-11470	123A
63-11471	123A
63-11472	123A
63-11474	102A
63-11496	160
63-11497	158
63-11582	160
63-11584	160
63-11585	100
63-11586	102A
63-11659	5071A
63-11660	123A
63-11661	102A
63-11757	123A
63-11758	123A
63-11759	123A
63-11762	125
63-11831	123A
63-11832	123A
63-11833	123A
63-11878	175
63-11879	109
63-11881	116
63-11916	123A
63-11934	123A
63-11935	123A
63-11936	128
63-11937	123A
63-11938	175
63-11957	116
63-11989	128
63-11990	185
63-11991	130
63-11991A	130
63-12003	123A
63-12004	123A
63-12062	123A
63-12077	117
63-12110	5071A
63-12154	159
63-12154A	159
63-12156	159
63-12156A	159
63-12157	159

To Be Replaced	ECG Replacement
63-12157A	159
63-12158	109
63-12272	123A
63-12273	162
63-12287	167
63-12316	102A
63-12317	102A
63-12366	125
63-12605	123A
63-12607	109
63-12608	123A
63-12609	123A
63-12610	160
63-12641	123A
63-12642	123A
63-12645	109
63-12669	158
63-12670	158
63-12696	123A
63-12697	123A
63-12698	158
63-12706	123A
63-12707	123A
63-12750	123A
63-12751	123A
63-12752	123A
63-12753	123A
63-12754	109
63-12755	109
63-12756	109
63-12757	109
63-12874	123A
63-12875	123A
63-12876	102A
63-12877	123A
63-12878	123A
63-12879	123A
63-12880	102A
63-12881	102A
63-12933	123A
63-12940	123A
63-12941	123A
63-12942	123A
63-12943	123A
63-12945	158
63-12946	123A
63-12947	158
63-12948	123A
63-12949	123A
63-12950	123A
63-12951	123A
63-12952	123A
63-12953	123A
63-12954	175
63-12989	128
63-12990	128
63-13025	160
63-13080	109
63-13214	128
63-13215	128
63-13216	162
63-13322	159
63-13322A	159
63-13323	158
63-13419	123A
63-13438	123A
63-13440	123A
63-13441	123A
63-13839	160
63-13840	102A
63-13842	109
63-13864	123A
63-13899	160
63-13903	116
63-13919	116
63-13926	132
63-13927	123A
63-13954	162
63-14032	123A
63-14051	123A
63-14052	123A
63-14057	123A
63-14135	727
63-14195	116
63-15345	718
63-15483	116
63-16918	102A
63-17390	160
63-18135	117
63-18416	100
63-18418	160
63-18419	160
63-18420	102A
63-18421	102A
63-18423	160
63-18424	160
63-18427	104
63-18430	102A
63-18643	123A
63-19173	173BP
63-19280	123A
63-19282	123A
63-22724	109
63-23041	102A
63-25179	102A
63-25180	102A
63-25181	102A
63-25182	102A
63-25261	158
63-25281	102A
63-25282	102A
63-25342	110MP
63-25720	102A
63-25726	160
63-25727	102A

To Be Replaced	ECG Replacement
63-25728	102A
63-25729	102A
63-25933	109
63-25942	102A
63-25944	102A
63-25946	100
63-26382	109
63-26597	116
63-26849	100
63-26850	160
63-26851	102A
63-27278	100
63-27279	100
63-27280	100
63-27281	102A
63-27366	160
63-27367	100
63-27483	117
63-27500	160
63-27622	116
63-28250	109
63-28348	160
63-28358	160
63-28390	102A
63-28399	102A
63-28426	154
63-28888	109
63-29383	117
63-29451	121
63-29459	121
63-29461	123A
63-29661	160
63-29662	100
63-29663	100
63-29664	100
63-29665	102A
63-29666	102A
63-29819	160
63-29820	160
63-29821	160
63-29862	160
63-29863	100
63-250128-2	112
63J2	116
63N1	163A
63N50	105
63P3	102
63Z6	5186A
63Z6A	5186A
64-J2	116
64N1	162
64R2	5878
64T1	100
64T4	5404
64Z6	5187A
64Z6A	5187A
65-080001	226MP
65-085002	109
65-085003	109
65-085004	142A
65-085010	109
65-085012	109
65-085013	116
65-1	123A
65-1-70	160
65-1-70-12	160
65-1-70-12-7	160
65-1A	160
65-1A0	160
65-1A0R	160
65-1A1	160
65-1A2	160
65-1A3	160
65-1A3P	160
65-1A4	160
65-1A4-7	160
65-1A4-7B	160
65-1A5	160
65-1A5L	160
65-1A6	160
65-1A6-5	160
65-1A7	160
65-1A7-1	160
65-1A8	160
65-1A9	160
65-1A9G	160
65-1A19	160
65-1A21	160
65-1A82	160
65-2	103A
65-2-70	103A
65-2-70-12	103A
65-2-70-12-7	103A
65-2A	103A
65-2A0	103A
65-2A0R	103A
65-2A1	103A
65-2A2	103A
65-2A3	103A
65-2A3P	103A
65-2A4	103A
65-2A4-7	103A
65-2A4-7B	103A
65-2A5	103A
65-2A5L	103A
65-2A6	103A
65-2A6-1	103A
65-2A7	103A
65-2A7-1	103A
65-2A8	103A
65-2A9	103A
65-2A9G	103A
65-2A19	103A
65-2A21	103A
65-2A82	103A

To Be Replaced	ECG Replacement
65-4	101
65-4-70	101
65-4-70-12	101
65-4-70-12-7	101
65-4A	101
65-4A0	101
65-4A0R	101
65-4A1	101
65-4A2	101
65-4A3	101
65-4A3P	101
65-4A4	101
65-4A4-7	101
65-4A4-7B	101
65-4A5	101
65-4A5L	101
65-4A6	101
65-4A6-2	101
65-4A7	101
65-4A7-1	101
65-4A8	101
65-4A9	101
65-4A9G	101
65-4A19	101
65-4A21	101
65-4A82	101
65-10	160
65-11	160
65-12	160
65-13	160
65-14	160
65-15	160
65-16	160
65-17	160
65-18	160
65-19	160
65-20	103A
65-21	103A
65-22	103A
65-23	103A
65-24	103A
65-25	103A
65-26	103A
65-27	103A
65-28	103A
65-29	103A
65-40	101
65-41	101
65-42	101
65-43	101
65-44	101
65-45	101
65-46	101
65-47	101
65-48	101
65-49	101
65-744238	114
65A	159
65A0	160
65A1	160
65A2	160
65A3	160
65A4	160
65A5	160
65A6	160
65A7	160
65A8	160
65A9	160
65A10	160
65A10R	160
65A12	160
65A13	160
65A13P	160
65A14	160
65A14-7	160
65A14-7B	160
65A15	160
65A15L	160
65A16	160
65A16-3	160
65A17	160
65A17-1	160
65A18	160
65A19	160
65A19G	160
65A-70	160
65A-70-12	160
65A-70-12-7	160
65A119	160
65A121	160
65A182	160
65A11573	199
65B	159
65B1	126
65B3	126
65B4	126
65B5	126
65B6	126
65B7	126
65B8	126
65B9	126
65B10	126
65B10R	126
65B11	126
65B12	126
65B13	126
65B13P	126
65B14	126
65B14-7	126
65B14-7B	126
65B15	126
65B15L	126
65B16	126
65B16-2	126
65B17	126

To Be Replaced	ECG Replacement
65B17-1	126
65B18	126
65B19	126
65B19G	126
65B-70	126
65B-70-12	126
65B-70-12-7	126
65B119	126
65B121	126
65B182	126
65BO	126
65C	159
65C0	121
65C1	159
65C2	121
65C3	121
65C4	121
65C5	121
65C6	121
65C7	121
65C8	121
65C9	121
65C10	121
65C10R	121
65C11	121
65C12	121
65C13	121
65C13P	121
65C14	121
65C14-7	121
65C14-7B	121
65C15	121
65C15L	121
65C16	121
65C16-4	121
65C17	121
65C17-1	121
65C18	121
65C19	121
65C19G	121
65C-70	121
65C-70-12	121
65C-70-12-7	121
65C119	121
65C121	121
65C182	121
65D	159
65D1	159
65(Diode)	116
65E	159
65E1	159
65F	159
65F1	159
65J2	116
65-K11305-0001	519
65-L11305-0001	519
65-L11324-0001	519
65P117	116
65P124	116
65P124-1	116
65P124-2	116
65P153	116
65P155	116
65P206	116
65P284	116
65P297	116
65-P11305-0001	519
65-P11308-0001	177
65-P11311-0001	177
65-P11324-0001	519
65-P11325-0001	519
65T1	102A
65(Transistor)	107
65Z6	5188A
65Z6A	5188A
66-1	102A
66-1-70	102A
66-1-70-12	102A
66-1-70-12-7	102A
66-1A	102A
66-1A0	102A
66-1A0R	102A
66-1A1	102A
66-1A2	102A
66-1A3	102A
66-1A3P	102A
66-1A4	102A
66-1A4-7	102A
66-1A4-7B	102A
66-1A5	102A
66-1A5L	102A
66-1A6	102A
66-1A6-3	102A
66-1A7	102A
66-1A7-1	102A
66-1A8	102A
66-1A9	102A
66-1A9G	102A
66-1A19	102A
66-1A21	102A
66-1A82	102A
66-2	102A
66-2-70	102A
66-2-70-12	102A
66-2-70-12-7	102A
66-2A	102A
66-2A0	102A
66-2A0R	102A
66-2A1	102A
66-2A2	102A
66-2A3	102A
66-2A3P	102A
66-2A4	102A
66-2A4-7	102A
66-2A4-7B	102A

To Be Replaced	ECG Replacement
66-2A5	102A
66-2A5L	102A
66-2A6	102A
66-2A6-4	102A
66-2A7	102A
66-2A7-1	102A
66-2A8	102A
66-2A9	102A
66-2A9G	102A
66-2A19	102A
66-2A21	102A
66-2A82	102A
66-3	102A
66-3-70	102A
66-3-70-12	102A
66-3-70-12-7	102A
66-3A	102A
66-3A0	102A
66-3A0R	102A
66-3A1	102A
66-3A2	102A
66-3A3	102A
66-3A3P	102A
66-3A4	102A
66-3A4-7	102A
66-3A4-7B	102A
66-3A5	102A
66-3A5L	102A
66-3A6	102A
66-3A6C	102A
66-3A7	102A
66-3A7-1	102A
66-3A8	102A
66-3A9	102A
66-3A9G	102A
66-3A19	102A
66-3A21	102A
66-3A82	102A
66-10	102A
66-11	102A
66-12	102A
66-13	102A
66-14	102A
66-15	102A
66-16	102A
66-17	102A
66-18	102A
66-19	102A
66-20	102A
66-21	102A
66-22	102A
66-23	102A
66-24	102A
66-25	102A
66-26	102A
66-27	102A
66-28	102A
66-29	102A
66-30	102A
66-31	102A
66-32	102A
66-33	102A
66-34	102A
66-35	102A
66-36	102A
66-37	102A
66-38	102A
66-2246	116
66-6023	102A
66-6023-00	102A
66-6024-00	102A
66-6025-00	102A
66-6026-00	102A
66-6027-00	102A
66-6028-00	102A
66-6030-00	116
66-6031-00	116
66-6033	102A
66-8504	125
66-127119	123A
66A00008A	123A
66A00010A	123A
66A10298	128
66A10310	234
66A10319	519
66B-3A5L	121MP
66C6-1	HiDiv-1
66C6-2	HiDiv-1
66C6-3	HiDiv-1
66C6-4	HiDiv-1
66C6-5	HiDiv-1
66C6-6	HiDiv-1
66C6-7	HiDiv-1
66C6-8	HiDiv-1
66C6-9	HiDiv-1
66C6-10	HiDiv-1
66F001	116
66F001-1	116
66F0011	116
66F0012	116
66F0013	116
66F0015	125
66F0074	142A
66F0076	142A
66F015	704
66F016-1	177
66F016-2	177
66F017	178MP
66F018	177
66F020-1	157
66F020-2	157
66F021-1	161
66F022-1	161
66F023-1	159
66F024-1	159

To Be Replaced	ECG Replacement
66F025-1	128
66F026-1	199
66F027-1	123A
66F028-1	123A
66F029-1	123A
66F039-1	172A
66F039-2	172A
66F041-1	159
66F042-1	161
66F-054-3	500A
66F054-3	500A
66F054-4	500A
66F057-1	123A
66F057-2	123A
66F058-2	188
66F069-1	188
66F069-2	189
66F074-1	171
66F074-2	171
66F074-3	171
66F074-4	171
66F077-1	712
66F0161	177
66F0162	177
66F0164	177
66F0165	177
66F0191	103A
66F0211	319
66F0221	319
66F0251	128
66F0252	128
66F0261	199
66F0271	123A
66F0291	123A
66F0341	108
66F0342	108
66F0371	199
66F0381	109
66F0391	172A
66F0393	172A/410
66F0411	159
66F0412	159
66F0413	159
66F0414	159
66F0421	161
66F0451	159
66F0454	159
66F0573	123A
66F0581	188
66F0644	116
66F0731	123A
66F0741	228
66F0742	228
66F0751	186
66F0752	186
66F0753	186
66F0754	186
66F0755	186
66F0771	712
66F0772	712
66F0991	220
66-F29-1	123A
66F112-1	522
66F112-2	522
66F125-1	792
66F133-1	198
66F136-1	793
66F159-1	523
66F159-2	523
66F159-3	523
66F175-1	808
66F176-1	809
66F181-1	522
66F1001	140A
66F1002	140A
66F1003	5053A
66F1004	135A
66F1005	5097A
66F1006	5055A
66F1007	134A
66F1008	5030A
66F1009	5079A
66F1011	194
66F1021	102A
66F1031	165
66F1032	165
66F1033	238
66F1051	210
66F1061	187
66F1062	187
66F1071	265
66F1081	5079A
66F1083	140A
66F1084	5097A
66F1085	5082A
66F1091	171
66F1092	171
66F1101	193
66F1131	177
66F1132	177
66F1141	506
66F1142	506
66F1151	132
66F1152	133
66F1161	108
66F1162	108
66F1171	708
66F1181	722
66F1191	614
66F1201	5400
66F1202	5400
66F1203	5400
66F1211	177
66F1221	116
66F1241	284

To Be Replaced	ECG Replacement
66F1251	792
66F1261	715
66F1271	790
66F1281	714
66F1301	6402
66F1341	128
66F1351	129
66F1361	793
66F1362	793
66F1421	199
66F1431	116
66F1441	116
66F1461	186
66F1471	186
66F1481	152
66F1491	153
66F1501	192
66F1511	193
66F1521	794
66F1531	747
66F1541	795
66F1551	738
66F1561	172A
66F1601	191
66F1602	191
66F1621	159
66F1622	159
66F1631	157
66F1651	506
66F1661	287
66F1671	165
66F1681	196
66F1741	794
66F1742	794
66F1751	808
66F1761	809
66F1771	791
66F2011	795
66F10010	5097A
66F10011	5082A
66J2	116
66M	123A
66-P11i20	159
66-P11112-0001	199
66-P11120	159
66-P11139	129
66-P11141	129
66R2	5882
66R2S	5883
66S00000A	128
66S-159-1	523
66X0003	358
66X0003-001	358
66X0003-1	358
66X0007-104	108
66X0020-000	109
66X0020-001	109
66X0023-001	116
66X0023-002	116
66X0023-003	116
66X0023-004	116
66X0023-005	116
66X0023-006	116
66X0023-007	116
66X0023-008	116
66X0023-009	125
66X0023-1	116
66X0024-000	113
66X0025-000	113
66X0025-000-001	113
66X0025-001	113
66X0028-001	116
66X0028-008	125
66X0033-000	116
66X0033-001	116
66X0035-001	118
66X0036-001	506
66X0036-002	119
66X0037-001	116
66X0038-001	506
66X0039-001	109
66X0040-003	137A
66X0040-004	5084A
66X0040-005	140A
66X0040-005(Bradford)	139A
66X0040-007	5081A
66X0040-008	5100A
66X0040-009	145A
66X0040-011	5068A
66X0040-012	149A
66X0041-001	120
66X0043-001	177
66X0044-001	177
66X0044-100	177
66X0045-001	501A
66X0046-001	177
66X0047-001	109
66X0047-901	109
66X0048-001	116
66X0049-001	194
66X0049-001(Diode)	110
66X0049-002	109
66X0049-004	5100A
66X0049-100	110MP
66X0050-001	614
66X0051-001	109
66X0053-001	515
66X0054-001	515
66X0054-002	515
66X0055-001	506
66X0060-001	522
66X0060-002	522
66X0062-001	177
66X053-001	116
66X20	109

To Be Replaced	ECG Replacement
66X21	113
66X23	116
66X24	116
66X25	113
66X25-0	113
66X26	116
66X36-1	506
66X41-1	120
66X218	113
66XZ18	113
66Z6	5128A
66Z6A	5128A
67-1000-00	116
67-1003-00	116
67A8926	234
67A9060	199
67J2	125
67J2A	125
67P1	121
67P1C	121
67P2	121
67P2C	121
67P3	121
67P3C	121
67Z6	5129A
67Z6A	5129A
68-110-02	159
68-20102-2701	724
68A7252	177
68A7349-D32	9932
68A7349-D46	9946
68A7349-D62	9962
68A7349PD30	9930
68A7349-PD32	9932
68A7349PD36	9936
68A7349PD45	9945
68A7349PD46	9946
68A7349PD62	9962
68A7355P1	234
68A7366-1	199
68A7368	128
68A7370-1	159
68A7370-P3	159
68A7380-1	123A
68A7380-2	128
68A7382-P1	159
68A7652P1	9109
68A7652P2	9110
68A7672P1	941
68A7702P1	194
68A7715P1	123A
68A7734P1	159
68A7860-P1	923
68A8225P001	5626
68 A 8318-P1	159
68A8321	123A
68A9025	7400
68A9026	74H00
68A9027	7402
68A9028	7404
68A9030	7410
68A9031	74H10
68A9032	7406
68A9033	7420
68A9034	7423
68A9035	7430
68A9036	7437
68A9037	7438
68A9038	7450
68A9040	7460
68A9041	7475
68A9042	7476
68A9047	74H106
68A9048	74151
68A9049	74153
68A8319001	130
68P1	121
68P1B	121
68P-2A5L	102A
68R2	5886
68R2S	5886
68X0003	358
68X0003-001	358
68X0040-004	5084A
68X0040-005	140A
68Z6	5130A
68Z6A	5130A
69-001	230
69-2246	116
69-2401	804
69-2403	804
69-2922	109
69-3116	804
69A49728-P1	177
69AJ110	218
69B1M	715
69B1Z	715
69B2Z	715
69L-4A5L	102A
69N1	108
69SP112	129
70-943-083-002	519
70-943-083-003	519
70-943-722-001	123A
70-943-754-002	123A
70-943-762-001	123A
70-943-772-002	123A
70-943-773-001	234
70-270050	125
70B1Z	714
70F40	116
70H5	6050
70H5A	6050
70H5AR	6051
70H5R	6051

To Be Replaced	ECG Replacement
70H10	6050
70H10A	6050
70H10AR	6051
70H10R	6051
70H15	6054
70H15A	6054
70H15AR	6055
70H15R	6055
70H20	6054
70H20A	6054
70H20AR	6055
70H20R	6055
70H25	6058
70H25A	6058
70H25AR	6059
70H25R	6059
70H30	6058
70H30A	6058
70H30AR	6059
70H30R	6059
70H40	6060
70H40A	6060
70H40AR	6061
70H40R	6061
70H50	6064
70H50A	6064
70H50AR	6065
70H50R	6065
70H60	6064
70H60A	6064
70H60AR	6065
70H60R	6065
70H70	6068
70H70A	6068
70H70AR	6069
70H70R	6069
70H80	6068
70H80A	6068
70H80AR	6069
70H80R	6069
70H90	6072
70H90A	6072
70H90AR	6073
70H90R	6073
70H100	6072
70H100A	6072
70H100AR	6073
70H100R	6073
70N1	123A
70N2	123
70N3	107
70N4	123A
70R2S	5890
70S40	116
70T40	116
70U10	6354
70U10R	6355
70U15A	6354
70U15AR	6355
70U20	6354
70U20R	6355
70U25A	6354
70U25AR	6355
70U40	6354
70U40R	6355
70U60	6356
70U60R	6357
70U70A	6358
70U70AR	6359
70U80	6358
70U80R	6359
70U90A	6358
70U90AR	6359
70U100	6358
70U100R	6359
70UW15	6354
70UW15R	6355
70UW25	6354
70UW25R	6355
70UW35	6354
70UW35R	6355
70UW45	6356
70UW45R	6357
70UW65	6358
70UW65R	6359
70.00.730	126
70.01.704	123A
71-13/51/60	519
71-70177A02	748
71-70177A03	738
71-70177A05	749
71-70177A07	767
71-70177B02	743
71-126268	123A
71D70177A02	748
71D70177A03	738
71M70177A02	748
71M70177A03	738
71N1	124
71N1B	123A
71N1T	124
71N2	124
71N2T	124
72-006327-1	116
72-028-9-002	306
72-11	116
72-15	116
72-18	177
72-27200-5	417
72-27200-6	418
72-27200-7	419
72-27200-8	420
72-34063-1	409
72-34063-2	416
72-34063-5	407

To Be Replaced	ECG Replacement
72B1Z	739
72N1	108
72N1B	128
72N2	108
72N2B	123A
72Z	116
73-15	145A
73-17	5075A
73-31	136A
73A01	176
73A02	176
73A60-11	506
73A64-1	178MP
73B-140-003-5	123A
73B140-004	127
73B-140-005-1	159
73B-140005-4	159
73B140385-001	128
73B140585-21	194
73B140585-22	194
73B140585-23	194
73B140585-24	194
73B140585-25	194
73B140585-26	194
73B140585-27	194
73B141789-1	815
73C18028-11	152
73C180475	712
73C180475-1	712
73C180475-4	712
73C180475-7	712
73C180475-8	712
73C180475-9	712
73C180476-5	712
73C180497-4	154
73C180499-5	154
73C180499-6	154
73C180828-12	152
73C180829-11	152
73C180829-12	152
73C180830-11	153
73C180830-12	153
73C180831-1	159
73C180831-2	159
73C180831-3	234
73C180837-1	790
73C180837-2	790
73C180837-3	790
73C180837P2	790
73C180838-1	749
73C180838-2	749
73C180838-3	749
73C180843-1	783
73C180843-2	783
73C180843-3	783
73C180843-4	783
73C181254	522
73C182051	522
73C182051-1	522
73C182051-2	522
73C182051-3	522
73C182077	728
73C182080-33	154
73C182081-31	123A
73C182082-31	159
73C182088-31	154
73C182186	712
73C182186-1	712
73C182186-2	712
73C182186-3	712
73C182186-4	712
73C180475004	712
73N1	161
73N1B	123A
73N51	105
73Z6	5240A
73Z6A	5240A
74	108
74-01-772	199
74-3	100
74-3-70	100
74-3-70-12	100
74-3-70-12-7	100
74-3A	100
74-3A0	100
74-3A0R	100
74-3A1	100
74-3A2	100
74-3A3	100
74-3A3P	100
74-3A4	100
74-3A4-7	100
74-3A4-7B	100
74-3A5	100
74-3A5L	100
74-3A6	100
74-3A6-3	100
74-3A7	100
74-3A7-1	100
74-3A8	100
74-3A9	100
74-3A9G	100
74-3A19	100
74-3A21	100
74-3A82	100
74-13-062	546
74-13-063	548
74-30	100
74-31	100
74-32	100
74-33	100
74-34	100
74-35	100
74-36	100
74-37	100

To Be Replaced	ECG Replacement
74-38	100
74-39	100
74A01	176
74A02	176
74A03	176
74H00PC	74H00
74H01PC	74H01
74H04PC	74H04
74H05PC	74H05
74H08PC	74H08
74H10PC	74H10
74H11PC	74H11
74H20PC	74H20
74H21PC	74H21
74H22	74H22
74H22/9H22	74H22
74H22PC	74H22
74H30PC	74H30
74H40PC	74H40
74H50PC	74H50
74H51PC	74H51
74H52PC	74H52
74H53PC	74H53
74H54PC	74H54
74H55PC	74H55
74H60PC	74H60
74H61PC	74H61
74H62PC	74H62
74H71PC	74H71
74H72PC	74H72
74H73PC	74H73
74H74PC	74H74
74H76PC	74H76
74H78PC	74H78
74H87DC	74H87
74H87PC	74H87
74H101DC	74H101
74H102DC	74H102
74H103PC	74H103
74H106PC	74H106
74H108PC	74H108
74H183DC	74H183
74H183PC	74H183
74L03	74LS03
74L00	74LS00
74LS00A	74LS00
74LS00N	74LS00
74LS00PC	74LS00
74LS02	74LS02
74LS02A	74LS02
74LS02PC	74LS02
74LS03	74LS03
74LS03A	74LS03
74LS03PC	74LS03
74LS04	74LS04
74LS04A	74LS04
74LS04PC	74LS04
74LS05	74LS05
74LS05A	74LS05
74LS05PC	74LS05
74LS08	74LS08
74LS08A	74LS08
74LS08PC	74LS08
74LS10	74LS10
74LS10A	74LS10
74LS10PC	74LS10
74LS11	74LS11
74LS11A	74LS11
74LS11PC	74LS11
74LS14	74LS14
74LS14A	74LS14
74LS14PC	74LS14
74LS20	74LS20
74LS20A	74LS20
74LS20PC	74LS20
74LS27	74LS27
74LS27A	74LS27
74LS27PC	74LS27
74LS30	74LS30
74LS30A	74LS30
74LS30PC	74LS30
74LS32	74LS32
74LS32A	74LS32
74LS32PC	74LS32
74LS38	74LS38
74LS38A	74LS38
74LS38PC	74LS38
74LS42	74LS42
74LS42A	74LS42
74LS42PC	74LS42
74LS49	74LS49
74LS51	74LS51
74LS51A	74LS51
74LS51PC	74LS51
74LS73	74LS73
74LS73A	74LS73
74LS73PC	74LS73
74LS74	74LS74A
74LS74A	74LS74A
74LS74PC	74LS74A
74LS75	74LS75
74LS83	74LS83A
74LS83A	74LS83A
74LS83PC	74LS83A
74LS85	74LS85
74LS85A	74LS85
74LS86	74LS86
74LS86A	74LS86
74LS86PC	74LS86
74LS93	74LS93
74LS93A	74LS93
74LS93PC	74LS93
74LS107	74LS107
74LS107A	74LS107
74LS109	74LS109A

To Be Replaced	ECG Replacement
74LS109B	74LS109A
74LS109PC	74LS109A
74LS123	74LS123
74LS136	74LS136
74LS136A	74LS136
74LS136PC	74LS136
74LS138	74LS138
74LS138B	74LS138
74LS138PC	74LS138
74LS151	74LS151
74LS151B	74LS151
74LS151PC	74LS151
74LS153	74LS153
74LS153B	74LS153
74LS153PC	74LS153
74LS157	74LS157
74LS157B	74LS157
74LS157PC	74LS157
74LS161	74LS161A
74LS161A	74LS161A
74LS161B	74LS161A
74LS161PC	74LS161A
74LS163	74LS163A
74LS163A	74LS163A
74LS163B	74LS163A
74LS163PC	74LS163A
74LS164	74LS164
74LS164A	74LS164
74LS164PC	74LS164
74LS174	74LS174
74LS174B	74LS174
74LS174PC	74LS174
74LS175	74LS175
74LS175B	74LS175
74LS175PC	74LS175
74LS191	74LS191
74LS191B	74LS191
74LS191PC	74LS191
74LS193	74LS193
74LS193B	74LS193
74LS193PC	74LS193
74LS195	74LS195A
74LS195A	74LS195A
74LS195B	74LS195A
74LS195PC	74LS195A
74LS221	74LS221
74LS221B	74LS221
74LS240	74LS240
74LS241	74LS241
74LS242	74LS242
74LS243	74LS243
74LS244	74LS244
74LS248	74LS248
74LS249	74LS249
74LS253	74LS253
74LS253B	74LS253
74LS253PC	74LS253
74LS257	74LS257
74LS257PC	74LS257
74LS259	74LS259
74LS259PC	74LS259
74LS266	74LS266
74LS266A	74LS266
74LS266PC	74LS266
74LS273	74LS273
74LS280	74LS280
74LS298	74LS298
74LS298PC	74LS298
74LS367	74LS367
74LS377	74LS377
74N1	123A
74P1	159
74P1M	129
74Q1262	160
74S00PC	74S00
74S03PC	74S03
74S04PC	74S04
74S05PC	74S05
74S10PC	74S10
74S11PC	74S11
74S15PC	74S15
74S20PC	74S20
74S22PC	74S22
74S40PC	74S40
74S64PC	74S64
74S65PC	74S65
74S74PC	74S74
74S86PC	74S86
74S112PC	74S112
74S113PC	74S113
74S114PC	74S114
74S133PC	74S133
74S134PC	74S134
74S138DC	74S138
74S140PC	74S140
74S151DC	74S151
74S153DC	74S153
74S153PC	74S153
74S157DC	74S157
74S157PC	74S157
74S158DC	74S158
74S158PC	74S158
74S175DC	74S175
74S175PC	74S175
74S194DC	74S194
74S194PC	74S194
74S251DC	74S251
74S258DC	74S258
74Z6	5241A
74Z6A	5241A
75	116
75-461	102A
75B1Z	801
75D01.	5454
75D02	5455

To Be Replaced	ECG Replacement
75D03	5543
75D04	5431
75D05	5422
75D06	5455
75D1	116
75D2	116
75D8	125
75D10	125
75E1	116
75E2	116
75E3	116
75E4	116
75E5	116
75E6	116
75E7	125
75E8	125
75E10	125
75F05	116
75N1	154
75N5AA	123A
75R1B	116
75R2B	116
75R3B	116
75R4B	116
75R5B	116
75R6B	116
75R7B	125
75R8B	125
75R9B	125
75R10B	125
75R11B	506
75R12B	506
75R13B	506
75R14B	506
75W-005	116(4)
75W005	116(4)
75Z6	5242A
75Z6A	5242A
75Z9.1	139A
75Z9.1A	139A
75Z9.1B	139A
75Z9.1C	139A
75Z11	141A
75Z11A	141A
75Z11B	141A
75Z11C	141A
75Z12	142A
75Z12A	142A
75Z12B	142A
75Z12C	142A
75Z13	143A
75Z13A	143A
75Z13B	143A
75Z13C	143A
75Z14	144A
75Z14A	144A
75Z14B	144A
75Z14C	144A
75Z15	145A
75Z15A	145A
75Z15B	145A
75Z15C	145A
75Z27	146A
75Z27A	146A
75Z27B	146A
75Z27C	146A
75Z33	147A
75Z33A	147A
75Z33B	147A
75Z33C	147A
75Z56	148A
75Z56A	148A
75Z56B	148A
75Z56C	148A
75Z62	149A
75Z62A	149A
75Z62B	149A
75Z62C	149A
75Z82	150A
75Z82A	150A
75Z82B	150A
75Z82C	150A
75Z110	151A
75Z110A	151A
75Z110B	151A
75Z110C	151A
76	126
76-042-9-006	289
76-0105	175
76-11770	104
76-12965-26	109
76-13570-39	108
76-13570-59	108
76-13570-65	112
76-13848-23	112
76-13866-17	108
76-13866-18	108
76-13866-19	108
76-13866-20	108
76-13866-59	108
76-13866-62	108
76-14090-1	128
76-14196-1	110
76-14327-1	500A
76-14327-2	500A
76-14327-3	500A
76-14327-4	500A
76-14327-5	500A
76-14327-6	500A
76-14327-7	500A
76-14327-8	500A
76B1Z	742
76G1450J	116
76-I(SYLVANIA)	159
76N1	123A

To Be Replaced	ECG Replacement
76N1B	128
76N1M	123A
76N2	123A
76N2B	128
76N3B	128
76N2369-000	123A
76N2369-001	123A
76S1030-000	128
76Z6	5243A
76Z6A	5243A
77	100
77-001	230
77-27166-2	160
77-27198-3	199
77-270877-2	121
77-270878-2	121
77-270993-1	117
77-271025-1	102A
77-271026-1	102A
77-271027-1	102A
77-271029-1	160
77-271029-2	160
77-271031-1	109
77-271032-1	109
77-271036-1	102A
77-271037-1	102A
77-271038-1	160
77-271039-1	102A
77-271166-3	160
77-271374-1	116
77-271453-1	123A
77-271490	128
77-271490-1	128
77-271491-1	121
77-271798-1	184
77-271798-2	199
77-271798-3	184
77-271818-1	129
77-271819-1	123A
77-271967-1	123A
77-272913-1	152
77-272914-1	153
77-272999-1	128
77-273001-2	123A
77-273001-3	160
77-273004-1	158
77-273715-1	152
77-273716-1	153
77-273738-1	152
77-273739-1	153
77A	105
77A0	105
77A01	177
77A02	177
77-A08	775
77A1	105
77A2	105
77A3	105
77A4	105
77A5	105
77A6	105
77A7	105
77A8	105
77A9	105
77A10	105
77A10R	105
77A11	105
77A11(Diode)	177
77A12	105
77A13	105
77A13(DIODE)	177
77A13P	105
77A14	105
77A14-7	105
77A14-7B	105
77A15	105
77A15L	105
77A16	105
77A16-1	105
77A17	105
77A17-1	105
77A18	105
77A19	105
77A19G	105
77A-70	105
77A-70-12	105
77A-70-12-7	105
77A119	105
77A121	105
77A182	105
77B	121MP
77B0	121MP
77B1	121MP
77B2	121MP
77B3	121MP
77B4	121MP
77B5	121MP
77B6	121MP
77B7	121MP
77B8	121MP
77B9	121MP
77B10	121MP
77B10R	121MP
77B11	121MP
77B12(IC)	788
77B12(Transistor)	121MP
77B13	121MP
77B13P	121MP
77B14	121MP
77B14-7	121MP
77B14-7B	121MP
77B15	121MP
77B15L	121MP

To Be Replaced	ECG Replacement
77B16	121MP
77B16-2	121MP
77B17	121MP
77B17-1	121MP
77B18	121MP
77B19	121MP
77B19G	121MP
77B-70	121MP
77B-70-12	121MP
77B-70-12-7	121MP
77B119	121MP
77B121	121MP
77B182	121MP
77C	121
77C0	121
77C1	121
77C2	121
77C3	121
77C4	121
77C5	121
77C6	121
77C7	121
77C8	121
77C9	121
77C10	121
77C10R	121
77C11	121
77C12	121
77C13	121
77C13P	121
77C14	121
77C14-7	121
77C14-7B	121
77C15	121
77C15L	121
77C16	121
77C16-3	121
77C17	121
77C17-1	121
77C18	121
77C19	121
77C19G	121
77C-70	121
77C-70-12	121
77C-70-12-7	121
77C119	121
77C121	121
77C182	121
77C800-005	9930
77C800-007	9932
77C800-008	9946
77C813-002	9945
77C710891-2	941
77N1	123A
77N2	123A
77N2B	128
77N3	123
77N4	123A
77N5	123A
77N6	123A
77S1017	519
77Z6	5244A
77Z6A	5244A
78-001	231
78-5009	121
78-254566-1	116
78-254566-4	116
78-271030-1	117
78-271031-1	110MP
78-271032-2	110MP
78-271143-1	116
78-271199-1	109
78-271228-1	109
78-271383-1	142A
78-271383-2	146A
78-271383-3	145A
78-271383-4	145A
78-272160-1	116
78-272212-1	121
78-273002-1	109
78-273008-1	116
78-273085	116
78A200010P4	7400
78BLK	100
78C01	108
78C02	108
78E67-2	199
78GRN	100
78L05	977
78L-05	977
78L05A	977
78L05-AN	977
78L05-AV	977
78L05AV	977
78L05-AV	977
78L05AVP	977
78L05AW	977
78L05C	977
78L05J	977
78L05LP	977
78L06	988
78L06AC	988
78L06C	988
78-L08	981
78L08	981
78L08A	981
78L08AC	981
78L08AWC	981
78L08LP	981
78L62	988
78L62AC	988
78L62AWC	988
78L62WV	988
78L82AC	981
78N1	123A

To Be Replaced	ECG Replacement
78N2B	123A
78RED	100
78YEL	100
78Z6	5246A
78Z6A	5246A
79E104-2	519
79F015	109
79F114-1	128
79F114-2A	129
79F114-3	128
79F114-4	129
79F114-4A	129
79F150	358
79F150-2	358
79F151	118
79F153	120
79P1	102A
79Z6	5247A
79Z6A	5247A
80	515
80-001300	125
80-001400	125
80-050100	123A
80-050300	103A
80-050400	160
80-050500	160
80-050600	103A
80-050700	121
80-051500	123A
80-051600	129
80-052102	123A
80-052202	123A
80-052302	123A
80-052402	130
80-052600	123A
80-052700	129
80-052800	103A
80-053001	123A
80-053300	128
80-053400	123A
80-053600	108
80-053702	130MP
80-60-1	109
80-308-2	123A
80-1059	177
80-104900	126
80-105200	126
80-105300	126
80-205400	102A
80-205600	102A
80-236400	102A
80-236430	102A
80-243900	102A
80-318250	123A
80-337390	123A
80-338030	108
80-338040	108
80-339430	108
80-339440	108
80-383840	108
80-383930	108
80-383940	123A
80-389910	123A
80-389930	123A
80-414120	130
80-414130	130
80-421980	123A
80-2226314	102A
80A5	125
80AS	125
80H	125
80H3	5866
80L20	525
80P1	102A
80P2	129
80P2B	129
80P3	129
80P3B	129
80Z6	5248A
80Z6A	5248A
81-23860400-3	188
81-23860400A	188
81-23860400B	188
81-27123100-3	116
81-27123150-8	109
81-27123300-3	116
81-27123307-3	116
81-27125140-7	123A
81-27125140-7A	123A
81-27125140-7B	123A
81-27125160-5	123A
81-27125160-5A	123A
81-27125160-5B	123A
81-27125270-2	123A
81-27125270-2A	123A
81-27125270-2B	123A
81-27125300-7	123A
81-27125530-9	188
81-27125530-9A	188
81-27125530-9B	188
81-27126100-0	188
81-27126130-7	121
81-27126130-7A	121
81-27126130-7B	121
81-46123001-3	109
81-46123004-5	116
81-46123004-7	116
81-46123005	116
81-46123006-2	109
81-46123010-4	5444
81-46123011-2	116
81-46123012-2	116
81-46123013-8	109
81-46123014-6	116
81-46123015-3	109

To Be Replaced	ECG Replacement
81-46123018-7	116
81-46123022-9	116
81-46123023-7	177
81-46123034-4	116(2)
81-46123035-1	116(2)
81-46123038-5	177
81-46123043-5	116
81-46123044-3	5072A
81-46125001-1	126
81-46125002-9	102A
81-46125003-7	102A
81-46125004-5	102A
81-46125005-2	158
81-46125006-0	108
81-46125007-8	107
81-46125009-4	102A
81-46125010-2	102A
81-46125011-0	102A
81-46125012-8	107
81-46125013-6	107
81-46125016-9	123A
81-46125018-5	158
81-46125019-3	123A
81-46125026-8	123A
81-46125027-6	123A
81-46125028-4	121
81-46125029-2	102A
81-46125030-0	107
81-46125032-6	107
81-46125033-4	107
81-46125053-2	199
81-46125063-1	199
81-46125065-6	133
81-46125071-4	159
81-46128001-8	1097
81-46128002-6	1110
81C(IC)	1075A
81P3	129
81T2	128
81X0042-100	184&185(CP)
81Z6	5249A
81Z6A	5249A
82-4	116
82-409501	123A
82-410300	129
82M432B2	915
82M667B2	925
83	129
83-43-3	118
83-829	116
83-880	116
83-1056	121
83B38-1	109
83N52	105
83P1	159
83P1A	159
83P1B	159
83P1BC	159
83P1M	159
83P1MC	159
83P1N	159
83P2	159
83P2A	159
83P2AA	159
83P2AA1	159
83P2B	129
83P2M	159
83P2M1	159
83P2N	159
83P3	159
83P3A	159
83P3AA	159
83P3AA1	159
83P3B	159
83P3B1	159
83P3M	159
83P3M1	159
83P4	159
83PS	159
83Z6	5252A
83Z6A	5252A
84	121
84-44-3	118
84A	121
84A0	121
84A1	121
84A2	121
84A3	121
84A4	121
84A5	121
84A6	121
84A7	121
84A8	121
84A9	121
84A10	121
84A10R	121
84A12	121
84A13	121
84A13P	121
84A14	121
84A14-7	121
84A14-7B	121
84A15	121
84A15L	121
84A16	121
84A16B	121
84A17	121
84A17-1	121
84A18	121
84A19	121
84A19G	121
84A20	177
84A-70	121
84A-70-12	121
84A-70-12-7	121

To Be Replaced	ECG Replacement
84A121	121
84A182	121
84AA1	121
84AA19	121
84B	121
84C01	157
84G01	157
84S157PC	74S157
85-5	116
85-370-2 BLU	121
85A500161	5626
85C04	123A
85M02704	910
85Z6	5254A
85Z6A	5254A
86-0002	109
86-0005	139A
86-0006	116
86-0007	115
86-0007-004	123A
86-0008	109
86-001	109
86-0010	116
86-0012	116
86-0013	116
86-0016-01	116
86-0022-001	123A
86-0029-001	123A
86-0031-001	123A
86-0033-007	131MP
86-0036-001	159
86-005135-2	199
86-0510	5071A
86-0511	116
86-0513	109
86-0515	177
86-0516	116
86-0518	611
86-0519	601
86-0520	601
86-0521	142A
86-0522	177
86-1-3	116
86-3-1	114
86-3-3	116
86-4-1	116
86-4-2	101
86-5-2	103A
86-6-2	103A
86-601-2	192
86-7-1	116
86-8-2	121
86-9-1	113
86-9-3	116
86-10-1	109
86-10-2	101
86-11-1	5080A
86-11-2	101
86-12-1	112
86-12-2	101
86-13-2	103A
86-14-1	110MP
86-14-2	103A
86-15-1	110
86-16-2	102A
86-18-1	113
86-18-1A	113
86-18-2	160
86-19-2	121
86-20-1	109
86-20-2	160
86-21-1	116
86-21-2	102A
86-22-1	109
86-22-2	102A
86-22-3	116
86-23-1	507
86-23-2	102A
86-23-3	116
86-24-2	103A
86-25-2	103A
86-26-2	101
86-27-1	177
86-27-2	102A
86-28-2	102A
86-28-3	116
86-29-2	102A
86-30-2	102A
86-30-3	116
86-31-1	142A
86-31-2	101
86-32-1	116
86-32-2	102A
86-33-2	102A
86-34-3	116
86-35-1	139A
86-35-2	103A
86-35-3	116
86-36-2	160
86-37-1	139A
86-37-2	160
86-37-3	120
86-38-2	160
86-39-2	102A
86-40-3	116
86-41-1	178MP
86-41-1(Sears-AGC)	177
86-41-1(SEARS)	177
86-42-1	123A
86-42-3	116
86-44-2	101
86-44-3	118
86-45-1	109
86-45-2	102A
86-45-3	119

To Be Replaced	ECG Replacement
86-46-2	102A
86-46-3	116
86-47-2	102A
86-48-1	110
86-48-2	102A
86-49-1	109
86-49-2	102A
86-49-3	116
86-50-2	102A
86-50-3	116
86-51-3	116
86-52-1	116
86-54-2	102A
86-54-3	116
86-55-3	120
86-56-3	120
86-56-3C	120
86-56-3F	120
86-57-3	116
86-58-1	139A
86-58-2	123A
86-58-3	116
86-59-1	116
86-59-2	102A
86-59-3	116
86-60-1	109
86-60-2	102A
86-60-3	116
86-61-1	142A
86-61-2	102A
86-62-1	177
86-62-2	121
86-62-3	116
86-63-2	121
86-63-3	116
86-64-1	109
86-65-1	142A
86-65-3	116
86-65-4	177
86-65-9	116
86-66-1	5079A
86-67-0	116
86-67-1	143A
86-67-2	125
86-67-3	125
86-67-9	116
86-68-3	166
86-68-3A	166
86-70-1	177
86-72-2	102A
86-72-3	125
86-73-1	5079A
86-73-2	102A
86-74-1	177
86-74-2	102A
86-74-9	177
86-75-2	102A
86-75-3(SEARS)	116
86-76-1	177
86-76-2	103A
86-77-1	177
86-77-2	102A
86-78-1	177
86-78-2	102A
86-79-2	102A
86-80-1	116
86-80-2	102A
86-80-3	116
86-81-2	103A
86-82-2	102A
86-83-2	102A
86-84-1	116
86-84-2	102A
86-85-1	142A
86-85-3	116
86-86-2	160
86-87-2	160
86-88-1	5079A
86-88-2	160
86-88-3	109
86-89-1	116
86-89-2	160
86-89-3	116
86-90-2	160
86-91-1	5081A
86-91-2	160
86-92-2	160
86-93-1	5075A
86-93-2	102A
86-94-1	147A
86-95-1	5137A
86-95-2	102A
86-96-1	5166A
86-97-1	113
86-98-2	102A
86-99-2	160
86-100-2	160
86-101-2	160
86-102-2	160
86-102-3	5401
86-103-2	102A
86-103-3	5448
86-103-9	5448
86-104-3	506
86-105-1	5009A
86-105-3	506
86-106-3	522
86-107-2	160
86-108-2	126
86-109-1	5069A
86-109-2	126
86-110-1	5071A
86-110-2	123A
86-110-3	5402
86-111-1	5080A

To Be Replaced	ECG Replacement
86-111-2	126
86-111-3	116
86-112-2	160
86-113-1	5081A
86-113-3	5448
86-114-1	5072A
86-114-2	102A
86-114-3	513
86-115-2	102A
86-116-2	126
86-116-3	506
86-117-1	5082A
86-117-2	160
86-117-3	506
86-118-1	140A
86-118-3	506
86-119-1	5085A
86-119-2	123A
86-120-2	121
86-121-2	128/411
86-123-2	123A
86-125-1	109
86-126-2	102A
86-127-2	121
86-127-3	529
86-128-2	102A
86-128-3	125
86-129-2	102A
86-130-2	102A
86-131-2	102A
86-132-2	102A
86-133-2	102A
86-135-1	5072A
86-135-2	160
86-136-2	160
86-138-2	108
86-139-1	5079A
86-139-2	123A
86-139-3	116
86-141-2	121
86-142-2	121
86-143-2	123A
86-144-2	123A
86-145-1	138A
86-146-1	109
86-146-2	121
86-147	116
86-147-1	116
86-147-2	121
86-147-3	116
86-148-1	5133A
86-149-1	5088A
86-149-2	160
86-150-1	5096A
86-150-2	160
86-150-3	5096A
86-151-2	160
86-152-2	102A
86-155-2	123A
86-156-2	102A
86-156-2A	102
86-158-2	123A
86-159-2	102A
86-160-2	129/411
86-161-2	128
86-162-2	160
86-163-2	160
86-164-2	160
86-165-2	157
86-166-2	123A
86-169-2	102A
86-170-2	128
86-171-2	123A
86-172-2	102A
86-173-2	121
86-173-9	121
86-175-2	123A
86-176-2	102A
86-177-2	157
86-178-2	159
86-178-20	159
86-179-2	160
86-180-2	160
86-181-2	160
86-182-2	123A
86-183-2	159
86-183-20	159
86-185-2	319
86-186-2	161
86-188-2	123A
86-189-2	123A
86-190-2	123A
86-191-2	123A
86-192-2	123A
86-193-2	123A
86-194-2	123A
86-195-2	123A
86-196-2	123A
86-197-2	123A
86-198-2	123A
86-199-2	123A
86-201-2	123A
86-202-2	123A
86-204-2	161
86-205-2	161
86-207-2	128
86-208-2	128
86-210-2	128
86-211-2	128
86-212-2	194
86-213-2	154
86-214-2	154
86-215-2	154
86-216-2	159
86-217-2	159

To Be Replaced	ECG Replacement
86-217-20	159
86-218-2	159
86-218-20	159
86-219-2	159
86-221-2	163A
86-222-2	163A
86-224-2	163A
86-224-9	163A
86-225-2	163A
86-227-2	124
86-228-2	157
86-230-2	121
86-231-2	121
86-232-2	121
86-233-2	159
86-234-2	128
86-235-2	121
86-236-2	124
86-237-2	123A
86-238-2	123A
86-243-2	108
86-244-2	108
86-245-2	108
86-246-2	159
86-246-20	159
86-247-2	123A
86-248-2	121
86-249-2	102A
86-250-2	123A
86-251-2	159
86-251-20	159
86-253-2	160
86-254-2	160
86-255-2	123A
86-256-2	123A
86-257-2	157
86-259-2	124
86-260-2	124
86-261-2	124
86-262-0	165
86-262-2	161
86-263-2	161
86-264-2	123A
86-265-2	123A
86-266-2	128
86-267-2	128
86-271-2	175
86-272-2	175
86-273-2	128
86-275-2	124
86-276-2	159
86-276-20	159
86-277-2	123A
86-278-2	160
86-279-2	160
86-280-2	126
86-281-2	126
86-282-2	126
86-283-2	102A
86-284-2	188
86-286-2	159
86-286-20	159
86-287-2	157
86-289-2	161
86-290-2	161
86-291-2	128
86-291-9	123A
86-292-2	127
86-292-9	127
86-293-2	123A
86-294-2	159
86-294-20	159
86-295-2	102A
86-296-2	160
86-297-2	102A
86-298-2	159
86-298-20	159
86-300-2	102A
86-301-2	103A
86-303-2	102A
86-304-2	102A
86-305-2	102A
86-308-2	123A
86-309-2	123A
86-310-2	123A
86-311-2	126
86-312-2	160
86-313-2	121
86-316-2	154
86-317-2	121
86-319-2	121
86-320-2	160
86-321-2	160
86-322-2	160
86-323-2	123A
86-324-2	123A
86-327-2	123A
86-328-2	123A
86-329-2	129
86-330-2	128
86-334-2	129
86-336-2	128
86-339-2	123A
86-339-9	123A
86-340-2	159
86-340-20	159
86-342-2	123A
86-344-2	184
86-344-9	184
86-345-2	185
86-347-2	160
86-348-2	160
86-353-2	121
86-354-2	121
86-359-2	123A

To Be Replaced	ECG Replacement
86-362-2	123A
86-363-2	160
86-365-2	123A
86-366-2	160
86-367-2	160
86-368-2	160
86-370-2	179
86-370-2 GRN	121
86-370-2 ORN	121
86-370-2 VIO	121
86-370-2YEL	121
86-373-2	160
86-374-2	160
86-376-2	160
86-379-2	123A
86-381-2	161
86-386-2	108
86-389-2	123
86-390-2	123A
86-391-2	123A
86-392-2	102A
86-393-2	128
86-396-2	185
86-396-9	185
86-399-1	123A
86-399-2	123A
86-399-9	123A
86-400-2	199
86-403-2	123A
86-406-2	159
86-407-2	159
86-412-2	175
86-416-2	108
86-417-2	108
86-419-2	102A
86-420-2	123A
86-421-2	102A
86-422-2	289
86-422-3	188
86-423-2	294
86-423-3	189
86-428-9	128
86-431-2	129
86-431-9	129
86-440-2	128
86-441-2	128
86-442-2	161
86-444-2	199
86-445-2	123A
86-449-2	126
86-449-9	160
86-452-2	128
86-457-2	123A
86-458-2	123A
86-459-2	159
86-460-2	123A
86-461-2	123A
86-462-2	123A
86-463-2	128
86-463-3(SEARS)	128
86-464-2	222
86-467-2	108
86-472-2	123A
86-475-2	159
86-476-2	102A
86-477-2	133
86-480-9	131
86-481-1	123A
86-481-2	123A
86-482-2	159
86-483-2	123A
86-483-3	123A
86-484-2	123A
86-485-2	123A
86-486-2	123A
86-487-2	124
86-487-3	124
86-488-2	108
86-490-2	108
86-491-2	108
86-493-2	123A
86-494-2	123A
86-495-2	123A
86-496-2	123A
86-497-2	102A
86-500-2	133
86-501-2	159
86-502-2	123A
86-506-2	184
86-507-2	185
86-509-2	102A
86-510-2	128
86-511-9	294
86-512-2	105
86-513-2	233
86-514-2	123A
86-515-2	194
86-515-2(SEARS)	123A
86-520-2	123A
86-521-2	194
86-525-2	107
86-526-2	199
86-527-2	159
86-528-2	159
86-529-2	152
86-530-2	153
86-533-2	159
86-534-0	123A
86-534-2	123A
86-539-2	123A
86-540-2	221
86-541-2	172A
86-543-2	128
86-544-2	152
86-547-2	159

To Be Replaced	ECG Replacement
86-548-2	123A
86-549-2	172A
86-550-2	194
86-551-2	123A
86-552-2	159
86-554-2	123A
86-555-2	159
86-556-2	171
86-557-2	194
86-559-2	123A
86-560-2	123A
86-561-2	123A
86-563-2	165
86-563-9	165
86-564-2	283
86-564-3	165
86-564-9	165
86-565-2	123A
86-566-2	194
86-567-2	128
86-568-2	196
86-568-9	196
86-570-2	178MP
86-570-2(AFC)	178MP
86-572-2	6402
86-572-3	6402
86-573-2	123A
86-574-2(Diode)	178MP
86-574-2(Transistor)	159
86-593-2	229
86-593-9	229
86-594-2	229
86-595-2	123A
86-596-2	107
86-597-2	107
86-598-2	123A
86-599-2	123A
86-600-2	159
86-601-2	192
86-602-2	193
86-605-2	222
86-606-2	222
86-607-2	199
86-607-2 3rd IF	233
86-608-2	234
86-609-2	297
86-609-9	297
86-610-2	298
86-610-9	290
86-611-2	194
86-612-2	154
86-613-2	291
86-614-2	292
86-615-2	194
86-616-2	129
86-619-2	229
86-620-2	229
86-621-2	229
86-622-2	159
86-624-2	124
86-624-9	124
86-625-2	222
86-626-2	238
86-626-9	165
86-628-2	171
86-628-9	171
86-629-2	154
86-630-2	194
86-631-2	171
86-632-2	222
86-633-2	165
86-633-9	238
86-646-2	123A
86-648-2	198
86-649-2	194
86-650-2	128
86-651-2	287
86-655-2	123A
86-659-2	189
86-660-2	188
86-661-2	123A
86-663-2	152
86-664-2	171
86-665-2	130
86-668-2	6401
86-669-2	159
86-671-2	263
86-672-2	171
86-673-2	210
86-674-2	128
86-675-2	128
86-702-2	123A
86-1392	123A
86-5000-1	177
86-5000-2	102A
86-5000-3	116
86-5001-2	102A
86-5001-3	116
86-5002-3	116
86-5003-2	103A
86-5003-3	116
86-5004-2	103A
86-5005-2	103A
86-5006-2	102A
86-5006-3	116
86-5007-2	103A
86-5007-3	109
86-5008-2	103A
86-5009-2	767
86-5009-3	116
86-5010-3	177
86-5011-2	103A
86-5011-3	177
86-5012-2	103A
86-5012-3	116

To Be Replaced	ECG Replacement
86-5013-2	103A
86-5015-2	103A
86-5015-3	177
86-5016-2	103A
86-5017-2	103A
86-5018-2	123A
86-5024-3	116
86-5026-2	103A
86-5027-2	102A
86-5027-3	177
86-5028-3	5802
86-5029-2	103A
86-5029-3	116
86-5032-3	5802
86-5034-2	103A
86-5037-3	177
86-5039-2	121
86-5040-2	123A
86-5041-2	123A
86-5042-2	102A
86-5043-2	121
86-5044-2	123A
86-5045-2	123A
86-5046-2	123A
86-5047-2	103A
86-5048-2	103A
86-5049-2	123A
86-5050-2	123A
86-5051-2	123A
86-5052-2	158
86-5055-2	123A
86-5056-2	123A
86-5057-2	121
86-5058-2	121
86-5060-2	103A
86-5061-2	103A
86-5062-2	103A
86-5063-2	102A
86-5064-2	129
86-5064-2A	129
86-5065-2	123
86-5067-2	102A
86-5070-2	128
86-5073-2	128
86-5074-2	128
86-5075-2	192
86-5079-2	159(2)
86-5080-2	103A
86-5081-2	123A
86-5082-2	129
86-5082-2A	129
86-5083-2	121
86-5084-2	130
86-5084-2A	130
86-5085-2	175
86-5086-2	103A
86-5087-2	103A
86-5088-2	121
86-5089-2	121
86-5090-2	121
86-5091-2	102A
86-5093-2	128
86-5095-2	133
86-5096-2	133
86-5097-2	123A
86-5099-2	123A(2)
86-5100-2	184
86-5101-2	130
86-5101-2A	130
86-5102-2	152
86-5103-2	123A
86-5104-2	193
86-5105-2	172A
86-5106-2	175
86-5107-2	152
86-5108-2	152
86-5109-2	128/411
86-5110-2	123A
86-5111-2	123A
86-5112-2	130
86-5112-2(Thomas)	130
86-5113-2	121
86-5114-2	123A
86-5117-2	123A
86-5122-2	133
86-5125-2	121
86-5911-3	116
86-5943-2	121
86-10003	229
86-100002	229
86-100004	229
86-100005	123A
86-100006	229
86-100007	229
86-100008	123A
86-100009	159
86-100010	293
86-100011	294
86-100013	177
86-100014	177
86 A 86A327	123A
86A318	102A
86A327	199
86A332	130
86A334	123A
86A335	159
86A336	123A
86A338	175
86A339	218
86A350	123A
86C04	185
86P1AA	159
86X0006-001	123A
86X0007-001	123A
86X0007-004	108

To Be Replaced	ECG Replacement
86X0007-104	123A
86X0007-204	108
86X0008-001	123A
86X0009-001	121
86X00011-001	102
86X006-001	123A
86X007-004	123A
86X007-034	123A
86X0011-001	126
86X0012-001	123
86X0013-001	126
86X0014-001	100
86X0015-001	121
86X0016-001	159
86X0016-001A	159
86X0017-001	102A
86X0018-001	102A
86X0022-001	123A
86X0024-001	704
86X0025-001	123
86X0027-001	704
86X0028-001	124
86X0029-001	123A
86X0030-001	121MP
86X0030-100	121MP
86X0031-001	123A
86X0031-002	123A
86X0031-003	123A
86X0032-001	123A
86X0033-001	131
86X0034-001	233
86X0034-001(3rdIF)	233
86X0035-001	123A
86X0036-001A	159
86X0036-001(Diode)	506
86X0036-001(Transistor)	159
86X0037-001	103A&158(CP)
86X0037-002	102A
86X0037-100	102A&103A
86X0038-001	108
86X0040-00	123A
86X0040-001	123A
86X0041-001	159
86X0041-001A	159
86X0042-001	242
86X0042-002	241
86X0042-100	184&185CP
86X0043-001	108
86X0044-001	159
86X0044-001A	159
86X0045-001	123A
86X0046-001	159
86X0047-001	159
86X0048-001	123A
86X0049-001	194
86X0050-001	123A
86X0051-001	123A
86X0052-001	319
86X0053-001	712
86X0054-001	123A
86X0055-001	728
86X0056-001	729
86X0058-001	123A
86X0058-002	123A
86X0058-003	123A
86X0059-001	184
86X0059-002	182
86X0060-001	107
86X0061-001	107
86X0062-001	107
86X0063-001	123A
86X0064-001	799
86X0065-001	171
86X0066-001	159
86X0066-003	159
86X0067-001	310
86X0068-001	308
86X0069-001	230
86X0070-001	6402
86X0071-001	128
86X0072-001	129
86X0073-001	188
86X0073-002	188
86X0074-001	184
86X0075-001	185
86X0076-001	228
86X0077-001	230
86X0077-002	231
86X0078-001	231
86X0079-001	123A
86X0080-001	242
86X0080-002	241
86X0080-100	152&153
86X0081-001	5457
86X0081-002	5455
86X0083-001	198
86X0084-001	815
86X0089-001	172A
86X0090-001	123A
86X037-001	103
86X2	121
86X3	102A
86X6	123A
86X6-1	123A
86X6-4-518	123A
86X7-2	123A
86X7-3	123A
86X7-4	123A
86X7-6	107
86X7-6013	108
86X8-1	123A
86X8-2	123A
86X8-3	123A
86X8-4	123A
86X34-1	123A

To Be Replaced	ECG Replacement
86X45-1	123A
86X46	159
86X47	159
86X53-1	712
86X55-1	728
86X-55-1	728
86X56-1	729
86X-56-1	729
86X56-2	729
86X65-1	171
86X6029-001	108
86Z6	5255A
86Z6A	5255A
87-0001	132
87-0002	229
87-0002-1	229
87-0003	229
87-0004	1006
87-0005	199
87-0006	192
87-0009	199
87-0013	199
87-0014	123A
87-0015	126
87-0016	126
87-0017	126
87-0018	102A
87-0019	102A
87-0020	102A
87-0021	102A
87-0022	1000
87-0023-Q	199
87-0023Q	199
87-0023-R	199
87-0023R	199
87-0023S	199
87-0023-T	199
87-0025-Q	289
87-0025-R	289
87-0027	108
87-0029	193
87-035-C	229
87-036-Q	293
87-036-R	293
87-0203-1	289
87-0212-1	199
87-0216	1142
87-0217	1185
87-0218-U	199
87-0218U	199
87-0227	199
87-0228	291
87-0229	292
87-0230	199
87-0230-1	199
87-0231	199
87-0233	1242
87-0234	801
87-0235	229
87-0235-A	229
87-0235A	229
87-0235-B	229
87-0235B	199
87-0235-C	229
87-0235C	229
87-0236-Q	293
87-0236-R	293
87-0236R	293
87-0236-S	293
87-0237-R	294
87-0237R	294
87-0237-S	294
87-0238	199
87-0239-A	287
87-0240	1223
87-0241R	295
87-0246	1223
87-5-3	120
87-10-0	109
87-10-1	110
87-67-3	116
87-104-3	506
87-190XX-001	177
87-218-U	199
87-423-2	290
87-593-2	229
87B02	188
87M42899B39	735
87Z6	5256A
87Z6A	5256A
88-0550	1115
88-3	116
88-77-1	177
88-125	116
88-831	116
88-832	116
88-833	116
88-9132	1114
88-9132F	1114
88-9302	744
88-9302R	744
88-9302S	744
88-9304	804
88-9574	737
88-9575	734
88-9779	736
88-9779F	736
88-9841R	789
88-9842F	723
88-9842R	723
88-9842S	723
88-18920	1058
88-20372	788
88-20404	801
88-1250108	199

To Be Replaced	ECG Replacement
88-1250109	123A
88A7522	949
88A752271	949
88B	160
88B0	160
88B1	160
88B2	160
88B3	160
88B4	160
88B5	160
88B6	160
88B7	160
88B8	160
88B9	160
88B10	160
88B10R	160
88B11	160
88B12	160
88B13	160
88B13P	160
88B14	160
88B14-7	160
88B14-7B	160
88B15	160
88B15L	160
88B16	160
88B16E	160
88B17	160
88B17-1	160
88B18	160
88B19	160
88B19G	160
88B-70	160
88B-70-12	160
88B-70-12-7	160
88B119	160
88B121	160
88B182	160
88B7258	709
88C	100
88C0	100
88C1	100
88C2	100
88C3	100
88C4	100
88C5	100
88C6	100
88C7	100
88C8	100
88C9	100
88C10	100
88C10R	100
88C11	100
88C12	100
88C13	100
88C13P	100
88C14	100
88C14-7	100
88C14-7B	100
88C15	100
88C15L	100
88C16	100
88C16D	100
88C17	100
88C17-1	100
88C18	100
88C19	100
88C19G	100
88C-70	100
88C-70-12	100
88C-70-12-7	100
88C119	100
88C121	100
88C182	100
88CC-70-12	100
88Z6	5257A
88Z6A	5257A
90-17B	222
90-30	123A
90-31	289
90-32	123A
90-33	199
90-35	1102
90-36	1100
90-37	1104
90-37(IC)	1104
90-37(Transistor)	160
90-38	186A
90-39	7474
90-45	161
90-46	313
90-47	313
90-48	123A
90-49	316
90-50	132
90-54	160
90-55	312
90-56(NPN)	123A
90-56(PNP)	158
90-57	123A
90-58	102A
90-58(FET)	222
90-59	160
90-60(NPN)	229
90-60(PNP)	102A
90-61	123A
90-62	312
90-65	123A
90-66	289
90-67	7474
90-68	7401
90-69	123A
90-70	199
90-71	123A
90-72	1102

To Be Replaced	ECG Replacement
90-73	1100
90-74	1104
90-75	186A
90-110	237
90-111	186A
90-112	315
90-140	199
90-175	237
90-176	186A
90-177	315
90-178	222
90-179	312
90-180	229
90-181	199
90-450	235
90-451	186A
90-452	123A
90-453	123A
90-454	315
90-455	233
90-456	123A
90-457	123A
90-458	199
90-459	199
90-600	152
90-601	123A
90-602	123A
90-603	199
90-604	229
90-605	199
90-606	312
90-607	133
90-608	133
90-609	235
90-610	236
90-611	312
90-612	123A
90-613	312
90-614	199
90-615	1052
90-2213-00-18	123A
90(Sharp)	138A
90T2	107
91-3	109
91-4	160
91-46	109
91A	108
91A01	116
91A02	116
91A03	116
91A04	125
91A05	116
91A06	116
91A08	506
91A018	116
91A11	116
91AJ150	175
91B	108
91BGRN	108
91C	123A
91D	123A
91E	123A
91F	108
91N1	110
91N1B	161
92-1	109
92-1-70	105
92-1-70-12	105
92-1-70-12-7	105
92-1A	105
92-1A0	105
92-1A0R	105
92-1A1	105
92-1A2	105
92-1A3	105
92-1A3P	105
92-1A4	105
92-1A4-7	105
92-1A4-7B	105
92-1A5	105
92-1A5L	105
92-1A6	105
92-1A6-1	105
92-1A7	105
92-1A7-1	105
92-1A8	105
92-1A9	105
92-1A9G	105
92-1A19	105
92-1A21	105
92-1A82	105
92-10	105
92-11	105
92-12	105
92-13	105
92-14	105
92-15	105
92-16	105
92-17	105
92-18	105
92-19	105
92-1001	109
92-30942	123A
92A11-1	116
92A64-1	178MP
92B1C	723
92B12-2	116
92BIC	723
92N1	108
92N1B	108
93-13	177
93-188	5693
93-302	116
93-3151	505
93A1D-1	116

To Be Replaced	ECG Replacement
93A2	117
93A3D-2	116
93A4-2	116
93A5-2	113
93A5-9	113
93A5-10	113
93A6-1	116
93A6-2	116
93A8-1	109
93A9	102
93A9-1	102A
93A9-2	102A
93A9-3	100
93A9-4	100
93A12-1	116
93A15-1	117
93A25-1	109
93A25-2	110
93A25-3	109
93A27-1	109
93A27-8	177
93A31-1	177
93A33-1	109
93A38-1	109
93A39-1	5081A
93A39-5	5079A
93A39-7	5079A
93A39-8	5081A
93A39-11	5071A
93A39-12	142A
93A39-12(Vol. Reg.)	142A
93A39-13	5074A
93A39-14	5082A
93A39-15	123A
93A39-19	136A
93A39-24	145A
93A39-25	149A
93A39-28	5098A
93A39-31	143A
93A39-34	5067A
93A39-35	5086A
93A39-40	147A
93A39-43	142A
93A39-44	5074A
93A39-45	5081A
93A39-49	5066A
93A39-50	5075A
93A40-1	506
93A41-2	110
93A41-5	109
93A42-7	116
93A43-1	112
93A43-2	112
93A51-3	116
93A52-1	116
93A53-2	120
93A53-3	116
93A55-1	5074A
93A57-1	118
93A59-1	112
93A60-1	506
93A60-2	116
93A60-3	506
93A60-5	177
93A60-6	177
93A60-7	116
93A60-8	116
93A60-9	116
93A60-10	506
93A60-11	506
93A60-14	116
93A64-1	177
93A64-2	506
93A64-2(AFC)	178MP
93A64-3	177
93A64-5	177
93A64-7	177
93A64-8	177
93A67-1	116
93A69-1	506
93A69-2	177
93A71-1	506
93A75-1	120
93A77-1	109
93A78-1	116
93A79-6	125
93A80-1	142A
93A83-1	110
93A91-1	522
93A91-2	522
93A91-3	522
93A91-4	522
93A91-5	522
93A91-6	522
93A93-1	504
93A93-2	504
93A96-1	500A
93A96-2	500A
93A96-3	500A
93A97-1	116
93A97-2	116
93A97-3	116
93A97-37	116
93A98-1	520
93A99-2	538
93A99-3	538
93A99-4	538
93A99-5	539
93A99-6	539
93A99-7	539
93A99-8	539
93A102-2	143A
93A104-1	116(4)
93A105-1	109
93A107-2	151A

To Be Replaced	ECG Replacement
93A110-1	109
93A3912	177
93B1-1	116
93B1-2	116
93B1-3	116
93B1-4	116
93B1-5	116
93B1-6	116
93B1-7	116
93B1-8	116
93B1-9	116
93B1-10	116
93B1-11	116
93B1-12	116
93B1-13	116
93B1-14	116
93B1-15	116
93B1-16	116
93B1-17	116
93B1-18	116
93B1-20	116(3)
93B1-21	116(3)
93B1C	787
93B2-1	116(3)
93B3-3	358
93B3-4	358
93B5-1	113
93B5-2	113
93B5-3	113
93B5-3-6	113
93B5-3-8	113
93B5-3-9	113
93B5-4	113
93B5-5	113
93B5-6	113
93B5-7	113
93B5-8	113
93B5-9	113
93B5-10	113
93B8-1	109
93B12-1	116
93B12-2	116
93B12-3	116
93B19-1	120
93B20-1	117
93B20-2	117
93B20-3	117
93B22-3	358
93B24-2	116
93B24-3	116
93B25-1	109
93B25-2	109
93B25-3	109
93B27-1	109
93B27-2	116
93B27-3	110
93B27-8	177
93B30-1	116
93B30-3	116
93B38-1	109
93B38-5	109
93B39-6	140A
93B39-12	142A
93B39-13	142A
93B41	109
93B41-1	109
93B41-2	109.110
93B41-3	109
93B41-4	116
93B41-6	116
93B41-8	116
93B41-12	116
93B41-14	116
93B41-20	117
93B42-1	116
93B42-2	116
93B42-3	116
93B42-4	116
93B42-6	116
93B42-7	116
93B42-8	116
93B42-9	116
93B42-10	116
93B42-11	116
93B42-12	116
93B44-1	112
93B45-1	116
93B45-2	116
93B45-3	125
93B47-1	116
93B48-1	177
93B48-2	177
93B48-3	177
93B48-4	177
93B51-3	116
93B52-1	506
93B52-2	506
93B53-1	116(3)
93B53-2	120
93B57-1	118
93B58-1	506
93B59-1	112
93B60-3	506
93B64-1	177
93B65-1	125
93B91-1	522
93B91-2	522
93B91-3	522
93B91-4	522
93B91-5	522
93B91-6	522
93B96-1	500A
93B96-2	500A
93B96-3	500A
93BIC	787

To Be Replaced	ECG Replacement
93C	9931
93C1-20	116
93C1-21	116
93C1-2021	120
93C5-2	114
93C5-3	114
93C5-4	114
93C5-5	113
93C5-6	113
93C5-7	113
93C5-8	113
93C5-8	113
93C5-8	113
93C5-8	113
93C5-8	113
93C5-8	113
93C5-9	113
93C5-10	113
93C6-7	113
93C6-9	113
93C7-1	109
93C7-2	177
93C7-3	177
93C8-1	109
93C16-2	116
93C18-1	125
93C18-2	125
93C18-2	125
93C19-1	116
93C22-1	358
93C22-3	358
93C24-2	116
93C25-2	110
93C25-3	109
93C30-1	116
93C30-3	116
93C39-1	134A
93C39-2	142A
93C39-3	139A
93C39-6	142A
93C39-8	5081A
93C39-10	138A
93C39-11	123
93C39-12	142A
93C39-13	142A
93C40	119
93C40-1	119
93C42-2	116
93C42-7	116
93C51-3	114
93C52-1	506
93C53-2	120
93C55-1	109
93C59	113
93C60-3	506
93C60-5	177
93C64-1	519
93C64-2	519
93C64-3	519
93C69-1	506
93C118-1	125
93C118-2	125
93C218	109
93C267	114
93D60-5	519
93D91-1	522
93D91-2	522
93D91-3	522
93D91-4	522
93D91-5	522
93D91-6	522
93D96-1	500A
93D96-2	500A
93D96-3	500A
93D98-1	520
93D99-2	538
93D99-3	538
93D99-4	538
93D99-5	539
93D99-6	539
93D99-7	539
93D99-8	539
93D112-57	112
93H87DC	74H87
93H87PC	74H87
93H183DC	74H183
93H193PC	74H183
93K2-1	113
93L3-1	117
93L3-2	117
93L5-1	116
93L5-2	117
93L5-3	156
93L5-4	116
93L5-5	156
93L5-6	116
93L5-7	116
93L5-8	156
93L101-2	116
93L102-2	116
93L103-4	116
93L104-5	156
93L107-2	116
93M8-1	117
93P1AA	159
93S153DC	74S153
93S157DC	74S157
93S157PC	74S157
93S158DC	74S158
93S158PC	74S158
93S174DC	74S174
93S174PC	74S174
93S175DC	74S175
93S175PC	74S175
93S194DC	74S194

To Be Replaced	ECG Replacement
93S194PC	74S194
93SC165133	130
93SC165133A	130
93-SE-124	130
93SE165	181
93.20.709	167
93.20.714	167
93.24.401	109
93.24.601	109
93.24.604	109
94-42-9	109
94-1066-1	116
94A-1A6-4	121
94B1C	724
94BIC	724
94N1	123A
94N1B	123A
94N1R	123A
94N1V	128
94N2	123A
94N2P	155
94T1	100
95-108	160
95-110	160
95-111	126
95-112	101
95-113	101
95-114	101
95-116	160
95-117	160
95-118	160
95-119	160
95-120	160
95-120A	100
95-121	160
95-122	160
95-123	160
95-124	160
95-125	108
95-126	108
95-127	108
95-128	108
95-129	108
95-130	108
95-131	108
95-201	102A
95-202	103A
95-203	102A
95-204	102A
95-208	102A
95-209	102A
95-212	102A
95-213	102A
95-214	102A
95-216	123A
95-217	102A
95-218	102A
95-220	128
95-221	123A
95-222-1	102A
95-222-2	103A
95-223	108
95-224-1	102A
95-224-2	103A
95-225	123A
95-226-003	129
95-226-004	128
95-226-1	129
95-226-2	123A
95-226-3	129
95-226-4	128
95-227	123A
95-250	121
95-250-1	121MP
95-251	121
95-252	124
95-252-1	124
95-252-2	124
95-252-3	124
95-252-4	124
95-257	121MP
95-296	123A
95-11410100	102A
95-11410200	102A
95-11410900	102A
95-11413500	102A
95-11414000	102
95-11511500	125
96-0008	109
96-056-234	108
96-138-2	108
96-5005-01	171
96-5007-01	109
96-5007-02	110MP
96-5022-01	116
96-5022-1	116
96-5023-01	116
96-5026-01	121
96-5032-01	102A
96-5033-01	102A
96-5033-02	102A
96-5033-03	102A
96-5033-04	102A
96-5045-01	121
96-5046-01	116
96-5059-01	109
96-5062-01	160
96-5064-01	121
96-5076-01	158
96-5080-02	123A
96-5081-01	121
96-5082-01	116
96-5085-01	102A
96-5085-02	102A
96-5086-02	121

To Be Replaced	ECG Replacement
96-5087-01	109
96-5088-01	116
96-5091-01	142A
96-5093-01	110MP
96-5093-02	110MP
96-5093-03	110MP
96-5094-01	110MP
96-5094-01(Transistor)	126
96-5095-01	160
96-5096-01	116
96-5098-01	102A
96-5099-01	160
96-5100-01	121
96-5100-03	121
96-5101-01	102A
96-5102-01	102A
96-5103-01	116
96-5106-01	5802
96-5107-01	128
96-5107-02	128
96-5109-01	116
96-5109-02	116
96-5110-02	145A
96-5110-03	145A
96-5112-01	156
96-5113-01	116
96-5115-01	123A
96-5115-02	123A
96-5115-03	123A
96-5115-04	123A
96-5115-05	123A
96-5116-01	140A
96-5117-01	130
96-5117-91	130
96-5118-01	177
96-5119-01	116(2)
96-5120-01	169
96-5121-01	116(2)
96-5124-02	138A
96-5125-01	121
96-5131-01	161
96-5132-01	124
96-5133-01-02	142A
96-5133-02	142A
96-5135-01	124
96-5138-01	160
96-5139-01	160
96-5140-01	160
96-5141-01	160
96-5143-01	121
96-5143-02	121
96-5148-01	121
96-5149-01	5802
96-5152-01	123A
96-5152-03	123A
96-5153-01	123A
96-5153-03	123A
96-5155-01	121
96-5161-01	192
96-5162-03	130
96-5162-04	130
96-5163-01	161
96-5164-02	130
96-5164-03	130
96-5165-01	129
96-5166-01	116(2)
96-5170-01	128
96-5174-01	161
96-5175-01	161
96-5176-01	129
96-5177-01	123A
96-5178-01	125
96-5180-01	128
96-5180-02	128
96-5184-01	5802
96-5187-01	123A
96-5190-01	175
96-5191-01	175
96-5192-01	121
96-5193-01	156
96-5194-01	156
96-5195-01	5809
96-5196-01	116
96-5198-01	161
96-5199-01	161
96-5201-01	130
96-5203-01	128
96-5204-01	128
96-5205-01	103A
96-5207-01	130
96-5208-01	128
96-5209-01	129
96-5213-01	123A
96-5214-01	5400
96-5215-01	159
96-5219-01	171
96-5220-01(NPN)	123A
96-5220-01(PNP)	129
96-5221-01	123A
96-5225-01	152
96-5228-01	123A
96-5229-01	123A
96-5230-01	129
96-5231-01	128
96-5232-01	196
96-5232-02	196
96-5232-03	196
96-5235-01	161
96-5236-01	161
96-5237-01	123A
96-5238-01	703A
96-5238-02	703A
96-5239-01	703A
96-5241-01	5809
96-5244-01	128

To Be Replaced	ECG Replacement
96-5245-01	196
96-5246-01	5982
96-5248-01	5071A
96-5248-04	142A
96-5248-06	145A
96-5248-09	5067A
96-5248-11	5067A
96-5248-12	5085A
96-5249-01	5127A
96-5249-02	5120A
96-5249-03	5133A
96-5250-01	5127A
96-5250-02	5139A
96-5250-03	5141A
96-5250-06	5130A
96-5250-07	5125A
96-5252-01	128
96-5254-01	177
96-5255-01	123A
96-5256-01	128
96-5257-01	123A
96-5258-01	234
96-5259-01	161
96-5260-01	161
96-5262-01	189
96-5263-01	188
96-5267-01	196
96-5269-01	6401
96-5281-01	123A
96-5282-01	159
96-5283-01	159
96-5284-01	162
96-5285-01	130
96-5290-01	123A
96-5303-01	153
96-5310-01	280
96-5314-01	123A
96-5315-01	181
96-5316-01	197
96-5320-01	189
96-5333-01	116
96-5334-01	161
96-5334-04	5133A
96-5334-05	5135A
96-5344-01	5125A
96-5344-02	5188A
96-5344-03	5130A
96-5345-01	125
96-5346-01	199
96-5348-01	152
96-5349-01	153
96-5356-01	153
96-5357-01	152
96-5363-01	109
96-5364-01	128
96-5365-01	159
96-5370-01	284
96-5371-01	285
96-5374-01	804
96-5376-01	725
96-5378-01	121
96-51430-02	121
96B-3A65	121MP
96N1	124
96N927	108
96N932	108
96N(Airline)	108
96NPT	108
96XZ077844N	109
96XZ778/21N	109
96XZ778/27N	113
96XZ778/44N	109
96XZ801/06N	121
96XZ801/10N	121
96XZ801/14N	123A
96XZ801/34X	121
96XZ801/37N	160
96XZ801/50N	102A
96XZ6050/25N	161
96XZ6051-28N	126
96XZ6051-35N	126
96XZ6051-36N	126
96XZ6052/52N	123A
96XZ6053-09N	102
96XZ6053-10N	126
96XZ6053/11N	123A
96XZ6053-24N	126
96XZ6053/24N	158
96XZ6053-27N	102
96XZ6053/27N	102A
96XZ6053/35N	123A
96XZ6053/36N	123A
96XZ6053/38N	128
96XZ6053/51N	102A
96XZ6054/45X	131MP
97A83	104
97N2	101
97N2U	103A
97P1	102
97P1U	158
98-1	102A
98-2	102A
98-3	102A
98-4	102A
98-5	102A
98-6	102A
98-7	102A
98-301	116
98-302	117
98-24320-2	175
98A12518	116
98P1	159
98P1P	131
98P-2A6-2	102A
98P10	159
99-101	126
99-102	126
99-103	126
99-104	102A
99-105	160
99-106	160
99-107	160
99-108	160
99-109-1	123A
99-109-2	123A
99-120	160
99-121	160
99-201	102A
99-202	102A
99-203	102A
99AT6	102
99B5	102
99BA6	100
99BE6	100
99E16-1	9900
99K7	101
99L-4A6-1	102A
99L6	103
99L6(Sharp)	128
99P1	159
99P1M	159
99P2	129
99P3	102A
99P3AA	102A
99P3C	129
99P5	159
99P6	159
99P10	159
99P117	129
99PIM	129
99S001	121
99S002	102A
99S003	100
99S004	158
99S004A	102A
99S005	102A
99S006	160
99S007	160
99S07	101
99S010	102A
99S010A	102A
99S011	102A
99S011A	102A
99S012	123A
99S012A	123A
99S012E	123A
99S013	121MP
99S013A	121MP
99S014	121
99S014A	121
99S015	121
99S016	108
99S016-1	108
99S017	108
99S018	108
99S018A	108
99S019	108
99S019A	108
99S019B	108
99S020	123
99S022	703A
99S022-1	703A
99S025	123A
99S025A	123A
99S031	161
99S032	161
99S032(3rd IF)	233
99S033	199
99S033-40	123A&159
99S033A	123A
99S034	194
99S035	123A
99S036	123A
99S037	108
99S038	123A
99S039	159
99S039A	159
99S040	194
99S041	222
99S042	710
99S044	161
99S045	221
99S045A	222
99S046	222
99S047	175
99S049	726
99S053	722
99S053-1	722
99S055	229
99S056	229
99S057	179
99S060-1	194
99S061-1	194
99S062-1	159
99S063-1	228
99S067-1	161
99S070-1	194
99S072	710
99S073	129
99S074	128
99S075	152
99-S-075	196
99S075	196
99S077-1	194
99S079	165
99S079-1	165
99S079-1(Hor Out)	165
99S079-2	165
99S079(Hor Out)	165
99S081	790
99S081-1	790
99S082	712
99S082-1	712
99S083-1	196
99S084-1	159
99S085	123A
99S087-1	154
99S090-1	108
99S091-1	188
99S092-1	189
99S094	714
99S094-1	714
99S095	715
99S095-1	715
99S096	790
99S096-1	790
99S097	783
99S097-1	783
99S099	197
99S099-1	153
99S100	196
99S100-1	152
99S101-1	154
99S102-1	190
99S103-1	130
99S103-2	181
99S103-3	130
99S105-1	184
99SA7	103A
99SK5	101
99SK7	101
99SQ7	101
100-001-01/2228-3	117
100-003-40/2228-3	109
100-007-10/2228/3	177
100-007-13/2228-3	109
100-0051	109
100-00310-09	177
100-00340-00	109
100-00340-00	109
100-00340-00	109
100-00910-07	109
100-00914-10	110MP
100-011-20	177
100-011-50/2228-3	177
100-0124	109
100-0125	109
100-0495-15	159
100-0495-25	159
100-0562-25	290
100-0673-04	290
100-01110-01	177
100-01120-09	177
100-1	187
100-1(Philco)	153
100-1(SYL)	153
100-2	197
100-10	136A
100-11	177
100-12	109
100-13	125
100-14	139A
100-15	116
100-24-3395	290
100-120	177
100-125	177
100-130	177
100-135	136A
100-136	109
100-137	177
100-138	116
100-139	139A
100-160	109
100-161	177
100-162	116
100-180	109
100-181	109
100-184	177
100-198	106(4)
100-215	109
100-216	177
100-217	116
100-218	5071A
100-219	5072A
100-286	143A
100-435	177
100-436	109
100-437	5071A
100-438	116
100-439	109
100-520	116
100-521	5072A
100-522	139A
100-523	139A
100-524	177
100-525	5801
100-527	116
100-4107	107
100-4790	159
100-4846-001	128
100-5338	128
100-5338-001	128
100-5765-001	175
100-10121-05	116
100-10132-00	116
100A	116
100B31	1004
100B63	102
100C-4R	116
100C(Admiral)	506
100D10	125
100K10	125
100L20	525
100N1	161
100N1AS	161
100N1P	161
100N3	319
100N3P	161
100R1B	116
100R2B	116
100R3B	116
100R4B	116
100R5B	116
100R6B	116
100R7B	125
100R8B	125
100R9B	125
100R10B	125
100R11B	506
100R12B	506
100R13B	506
100R14B	506
100R20B	525
100T2	130
100T2A	130
100W1	108
100X2	130
100X6	130
100X6A	130
101-1(Admiral)	161
101-2(Admiral)	108
101-3(Admiral)	108
101-4(Admiral)	108
101-12	100
101-15	102A
101-6742(RCA)	173BP
101-6744(RCA)	173BP
101A	160
101A(Diode)	177
101B	160
101B6	116
101M	160
101P1	159
101P10	159
102-02	109
102-0373-00	199
102-0380-15	229
102-0394-25	229
102-0454-02	289
102-0460-02	233
102-0461-02	229
102-0495-00	295
102-0495-20	295
102-0535-02	229
102-0732-28	199
102-0735-02	289
102-0735-25	289
102-0762-16	108
102-0820-17	199
102-0828-17	199
102-0829-02	123A
102-0941-15	123A
102-0945-16	199
102-0945-16/18	199
102-0945-16/38	199
102-0945-17	199
102-0945-17/39	199
102-0945-38	199
102-0945-39	199
102-1(RCA)	367
102-4	161
102-207	109
102-339	177
102-372-15	123A
102-412	519
102-842	106
102-1047-03	229
102-1061-01	152
102-1125-12	229
102-1166-25	297
102-1317-18	289
102-1318-18	297
102-1335-04	199
102-1342-02	229
102-1384-17	293
102-1675-02	229
102-1675-11	229
102-1675-12	229
102-1678-00	235
102-1678-81	235
102B6	116
102D	116
102P1	159
102P10	159
103-0001	541
103-0002	541
103-0004	543
103-0005	548
103-0006	540
103-0227-18	123A
103-0235-85	152
103-0571-11	306
103-0571-11/12	306
103-0571-12	306
103-1(RCA)	367
103-4	108
103-19	109
103-20	113
103-22	109
103-23	109,110
103-23-01	109
103-28	358
103-29	116
103-31	109
103-32	113
103-34	109
103-42	177
103-43	113
103-44	109
103-47	614
103-47-01	614
103-49	112
103-51	177
103-60	112
103-61	112
103-65	112
103-71	358
103-73	109
103-74	109
103-76	116
103-79	109
103-82	116
103-87	109
103-89	358
103-90	110MP
103-96	143A
103-96-01	143A
103-101	178MP
103-102	110
103-105	5081A
103-105-01	5081A
103-112	506
103-114	109
103-131	177
103-140	5071A
103-141	519
103-141-01	177
103-142	177
103-142-01	177
103-142(DET)	178MP
103-144	5138A
103-144-01	5081A
103-145	177
103-145-01	116
103-146	177
103-158	142A
103-159	177
103-160	506
103-178	177
103-178-01	177
103-189	614
103-191	116
103-192	178MP
103-193	506
103-194	138A
103-196	506
103-198	506
103-202	109
103-202(Germanium)	109
103-203	116
103-206	5162A
103-208	5098A
103-212	5080A
103-215	513
103-216	116
103-222	177
103-222-01	177
103-228	116
103-231	5075A
103-236	147A
103-237	147A
103-239	503
103-239-01	503
103-239-02	504
103-240	177
103-244	506
103-245	116
103-246	5074A
103-247	506
103-248	5081A
103-252	5077A
103-254	116
103-254-01	116
103-254-624	116
103-254-632	116
103-256	5128A
103-258	505
103-261	116
103-261-0	116
103-261-01	116
103-261-02	177
103-261-04	116
103-263	506
103-270	5086A
103-270-185	5086A
103-271	110
103-272	139A
103-275	503
103-275-02	503
103-276	5081A
103-278	5081A
103-279-01	142A
103-279-09	177
103-279-18	139A
103-279-20	5074A
103-279-21	142A
103-279-21A	5021A
103-279-37	5085A
103-279-37A	5085A
103-284	125
103-287	506
103-287-01	506
103-287(Germanium)	109
103-289	5081A
103-292	5081A
103-293-02	504
103-296	109
103B6	116
103G3125	116
103G3125A	116
103P935	159
103P935A	159
103P(Airline)	159
103PA	159
104	154
104-1(RCA)	352
104-8	154
104-8(SYL)	116
104-9(SYL)	116
104-17	126
104-17(RCA)	159
104-19	126
104-21	126
104-170	159
104B6	116
104H01	128
104T2	130
104T2A	130
105	159
105-001-08	108
105-003-06	123A
105-003-09	123A
105-005-04/2228-3	108
105-005-12	108
105-006-08	123A
105-008-04/2228-3	108
105-009-21/2228-3	108
105-00106-00	108
105-00107-09	107
105-00108-07	108
105-02	109
105-03	109
105-060-09	123A
105-085-33	123A
105-085-54	123A
105-02004-09	108
105-02005-07	107
105-02006-05	107
105-02008-01	107
105-06004-00	108
105-06004-00	108
105-06007-05	123A
105-08243-05	123A
105-3(SYL)	119
105-12	123A
105-931-91/2228-3	123A
105-941-97/2228-3	108
105-24191-04	108
105-28196-07	123A
105(Admiral)	123A
105B6	116
106	116
106-001	229
106-002	229
106-003	199
106-004	186A
106-005	295
106-006	235
106-007	519
106-008	109
106-009	177
106-010	139A
106-011	116
106-013	156
106-1	116
106-1(SYL)	118
106-3(SYL)	503
106-4(SYL)	504
106-5(SYL)	504
106-6(SYL)	504
106-7(SYL)	504
106-12	159
106-111	116
106-120	159
106-351	229
106A	5454
106B	5455
106B6	116
106C	5456
106F	5461
106KB0	129
106KBA	129
106M	132
106P1	121
106P1AG	121
106P1T	121
106Q	5461
106RED	159
106Y	5461
107-0021-00	6400
107-8	123A
107A	160
107A(SCR)	5454
107B	160
107B6	116
107B(SCR)	5455
107BRN	123A
107C	5456
107D	5457
107F	5461
107M	160
107N1	128
107N2	123A
107P341	5635
107Q	5461
107Y	5461
108	116
108-0049-08	312
108-0068-12	133
108-1	160
108-2	160
108-3	160
108-4	160
108-6	159
108-60	159
108A	5454
108A4	116
108B	5455
108B4	116
108B6	116
108C	5456
108D	5457
108E-E2	116
108F	5453
108(Farfisa)	109
108GRN	159
108(IBM)	213
108Q	5452
108T2	327
108Y	5452
109	123A
109-036500	109
109-1(RCA)	123A
109A949CE	5693
109A949CM-P1	5624
109B6	116
109T2	327
110	159
110-01563-00	102A
110-01563-00	102A
110-629	116
110-635	116
110-636	125
110-672	116
110-684	116
110-763	109
110B6	125
110BH1	118
110(Boost)	119
110P1	159
110P1AA	159
110P1M	159
111-1	116
111-4-2020-0800	116
111-4-2020-04600	712
111-4-2020-05600	110MP
111-4-2020-06100	177
111-4-2020-06200(MP)	178MP
111-4-2020-08000	116
111-4-2020-08600	109
111-4-2020-11300	5071A
111-4-2020-11500	5074A
111-4-2020-13300	5085A
111-4-2020-14400	506
111-4-2020-14600	116
111-4-2020-15100	506
111-4-2020-15600	177
111-4-2060-02300	1004
111-4-2060-02400	1004
111-4-2060-02600	1080
111-4-2060-03900	1080
111-4-2060-04000	712
111-4-2060-04600	712
111-4-2060-05200	1159
111-4-2060-2600	1080
111-6191	5547
111-6935	126
111N2C	130
111N4	130
111N4A	130
111N4B	130
111N4C	130
111N6	130
111N6C	152
111N8C	196
111P3B	218
111P5	219
111P5C	104
111P7C	104
111T2	154
111Z4	411
112-000088	123A
112-000172	159
112-000185	159
112-000187	159
112-000267	160
112-001	100
112-002	126
112-003	102
112-004	102
112-011 A	123A
112-034923	102A
112-1A82	123A
112-2	129
112-2A	129
112-7	159
112-8	159
112-10	159
112-361	128
112-362	224
112-363	130
112-500-0-50	177
112-500-0-501	177
112-520	108
112-521	108
112-522	108
112-523	123A
112-524	121
112-525	128
112-526	224
112-527	224
112-601-0-102	116
112-826	116
112-200525	102A
112-202147	121
112-203053	210
112-203055	130
112-203391	199
112-7292955	179
113-039	116
113-118	123
113-321	116
113-392	116
113-398	108
113-938	108

To Be Replaced	ECG Replacement
113-998	117
113A7739	116
113N1AG	172A
113N2	172A
114-013	116
114-1(Philco)	192
114-1(SYL)	287
114-2(SYL)	192
114-3	287
114-4-2020-14500	116
114-118	108
114-267	108
114-21814	542
114-42020-14500	116
114A-1-82	121
114N2P	184
114N4P	103A/410
114N4U	103A
114P1P	185
114P3P	158/410
114P3U	158
115-039	116
115-063	121
115-1	123
115-1(SYL)	288
115-2(SYL)	192
115-3	288
115-4	123
115-225	123A
115-227	160
115-228	160
115-229	160
115-268	121
115-269	121
115-275	126
115-281	121MP
115-282	121MP
115-283	121MP
115-284	121MP
115-559	116
115-599	116
115-867	117
115-875	123A
115C5	784
115C7	786
115C-8	912
115Z4	145A
116-052	116
116-068	127
116-072	126
116-073	108
116-074	123A
116-075	124
116-078	123A
116-079	108
116-080	108
116-082	108
116-083	108
116-085	123A
116-086	127
116-087	127
116-088	127
116-089	127
116-091	102A
116-092	123A
116-1	124
116/95-P2	339
116-198	108
116-199	108
116-200	108
116-201	102A
116-202	160
116-203	102A
116-206	102A
116-207	160
116-208	160
116-209	160
116-588	123A
116,666	519
116-683	160
116-684	160
116-685	102A
116-686	102A
116-687	103A
116-756	126
116-757	102A
116/839-P3	339
116-875	123A
116-997	102A
116C3475	181
117-1	124
117-1(RCA)	278
117-2(Heathkit)	158(4)
117-6(Heathkit)	103A&158(CP)
117-9(Heathkit)	184&185(CP)
117-A40	504
117-A40-7350	504
118	192
118-030	177
118-02900	519
118-02902	519
118-1	108
118-2	108
118-3	108
118-4	108
119-0016	105
119-0054	123A
119-0055	159
119-0056	123A
119-0068	175
119-0075	181
119-0077	128
119-6511	116
120-000190	160
120-001-300	116

To Be Replaced	ECG Replacement
120-002	912
120-00-19	102
120-00190	126
120-00195	102A
120-00213	126
120-001190	160
120-001192	100
120-001195	102
120-001300	116
120-001301	110
120-001795	102
120-001798	195A
120-002012	102A
120-002013	102A
120-002014	102A
120-002213	160
120-002214	160
120-002216	160
120-002513	126
120-002515	126
120-002518	126
120-002520	158
120-002521	102A
120-002656	126
120-002748	102A
120-003147	177
120-003148	116
120-003149	125
120-003150	131
120-003151	195A
120-004048	126
120-004061	125
120-004480	123A
120-004482	123A
120-004483	123A
120-004492	126
120-004493	158
120-004494	158
120-004495	158
120-004496	108
120-004497	108
120-004498	109
120-004499	109
120-004503	116
120-004629	178MP
120-004722	160
120-004723	108
120-004724	108
120-004725	108
120-004727	102A
120-004728	158
120-004729	102A
120-004730	109
120-004877	177
120-004878	116
120-004879	139A
120-004880	123A
120-004881	108
120-004882	123A
120-004883	123A
120-004884	191
120-004885	224
120-004886	224
120-004887	131
120-004888	101
120-005291	108
120-005292	108
120-005293	108
120-005294	108
120-005295	108
120-005296	108
120-005297	108
120-005298	108
120-005299	109
120-006604	159
120-01193	102A
120-02213	160
120-1	123A
120-2	123A
120-3	123A
120-7	123A
120-8	123A
120-8A	123A
120-77BR	159
120-190	102A
120-1675-12	229
120A02	177
120A11	177
120A13	177
120BLU	123A
120P1	159
120P1M	159
121	222
121-0041	137A
121-1	159
121-1RED	159
121-1(SYL)	238
121-6	103A
121-7	103A
121-8	103A
121-9	102A
121-10	102A
121-11	102A
121-12	102A
121-14(Columbia)	128
121-14(Zenith)	102A
121-15	101
121-16	101
121-17	101
121-18	124
121-18(Zenith)	102A
121-19	102A
121-21	101
121-22	101
121-24	101

To Be Replaced	ECG Replacement
121-25	101
121-26	101
121-27	102
121-31	109
121-33	102A
121-34	102A
121-43	102A
121-44	126
121-45	126
121-46	102A
121-47	102A
121-48	160
121-49	160
121-50	101
121-51	101
121-52	102A
121-53	100
121-54	126
121-59	103A
121-60	103A
121-61	102A
121-62	126
121-63	160
121-64	102A
121-65	126
121-66	126
121-67	126
121-68	102A
121-69	102A
121-70	101
121-71	101
121-72	102A
121-73	160
121-74	160
121-75	160
121-76	160
121-78	160
121-79	160
121-80	100
121-81	100
121-82	100
121-83	100
121-84	100
121-85	100
121-86	100
121-87	100
121-88	100
121-89	100
121-90	100
121-91	100
121-92	100
121-93	100
121-94	100
121-95	102
121-96	102
121-100	101
121-101	160
121-102	160
121-103	160
121-104	160
121-105	160
121-106	102
121-107	102
121-113	229
121-119	160
121-120	158
121-128	100
121-132	160
121-134	160
121-135	160
121-136	160
121-137	160
121-138	160
121-139	160
121-145	100
121-146	100
121-147	100
121-148	102A
121-150	126
121-151	102A
121-152	102A
121-153	126
121-154	126
121-157	160
121-160	100
121-161	126
121-162	126
121-163	102A
121-164	102A
121-171	121
121-179	160
121-180	160
121-181	160
121-184	102A
121-185	160
121-186	126
121-187	126
121-189	126
121-190	102A
121-191	102A
121-192	102A
121-193	102A
121-195B	123A
121-205	100
121-206	100
121-207	100
121-208	100
121-209	100
121-210	100
121-211	100
121-212	100
121-213	100
121-219	100
121-220	100
121-221	100

To Be Replaced	ECG Replacement
121-222	100
121-225	100
121-226	102A
121-227	102A
121-228	126
121-229	126
121-230	126
121-231	126
121-232	126
121-233	126
121-234	100
121-235	100
121-236	100
121-237	103A
121-238	103A
121-239	102A
121-240	126
121-240X	102A
121-241	154
121-241(Zenith)	126
121-242	160
121-243	160
121-244	160
121-245	102A
121-246	102A
121-247	103A
121-248	103A
121-254	100
121-256	126
121-257	126
121-258	126
121-259	126
121-260	126
121-261	126
121-262	126
121-263	126
121-266	102
121-267	102
121-268	160
121-269	160
121-270	121
121-271	121
121-272	102A
121-273	102A
121-274	102A
121-275	102A
121-276	123
121-277	123
121-278	123
121-279	128/411
121-283	161
121-284	160
121-289	126
121-290	126
121-291	102A
121-292	126
121-293	126
121-294	126
121-295	126
121-296	126
121-297	126
121-298	126
121-299	126
121-300	102A
121-301	102A
121-302	101
121-303	108
121-304	160
121-305	102A
121-306	102A
121-307	102A
121-308	121
121-309	102A
121-310	102A
121-311	102A
121-311B	102A
121-312	160
121-313	160
121-314	102A
121-315	124
121-316	108
121-317	108
121-318	108
121-318L	108
121-319	102A
121-320	102A
121-321	108
121-327	102A
121-328	102A
121-329	160
121-330	160
121-331	160
121-332	160
121-333	160
121-334	160
121-335	160
121-336	160
121-345	108
121-347	102A
121-348	102A
121-349	160
121-350	160
121-351	160
121-352	160
121-353	160
121-354	100
121-356	160
121-357	160
121-358	160
121-359	160
121-360	126
121-361	154
121-362	158
121-363	121
121-364	123A

To Be Replaced	ECG Replacement
121-365	123A
121-366	123A
121-367	123A
121-368	158
121-369	123A
121-370	127
121-371	121
121-372	102
121-373	158
121-374	102A
121-375	102A
121-377	161
121-378	161
121-379	161
121-380	161
121-381	126
121-382	121
121-383	160
121-384	160
121-385	160
121-388	158
121-389	121
121-395	102A
121-396	102A
121-397	100
121-398	121
121-399	102A
121-400	158
121-401	158
121-403	158
121-404	123A
121-406	179
121-408	102A
121-409	102A
121-411	160
121-412	160
121-413	160
121-414	160
121-415	160
121-415B	160
121-417	159
121-418	179(2)
121-419	179
121-420	102A
121-421	158
121-422	123
121-423	123A
121-425	158
121-426	160
121-427	160
121-428	160
121-429	160
121-430	123A
121-430B	123A
121-430CL	123A
121-431	128
121-432	160
121-433	123A
121-433CL	123A
121-434	289
121-434H	289
121-435	123A
121-436	124
121-437	102A
121-441	159
121-442	123A
121-444	159
121-445	154
121-446	159
121-447	123A
121-447-01	123A
121-448	123A
121-449	162
121-450	123A
121-451	124
121-452	163A
121-453	161
121-460	161
121-461	161
121-462	161
121-470	161
121-471	161
121-472	108
121-473	154
121-480	107
121-481	108
121-482	108
121-483	108
121-490	102A
121-491	126
121-492	126
121-493	126
121-494	126
121-495	159
121-496	159
121-497	159
121-497WHT	159
121-498	108
121-499	123A
121-500	161
121-501	161
121-502	161
121-503	319
121-504	319
121-505	319
121-506	319
121-507	319
121-508	319
121-509	319
121-510	161
121-520	108
121-521	161
121-522	233
121-523	161
121-524	233

To Be Replaced	ECG Replacement
121-524A	233
121-526	233
121-538	160
121-538B	160
121-539	160
121-540	160
121-540B	160
121-541	160
121-541B	160
121-542	160
121-542B	160
121-543	102A
121-544	102A
121-546	108
121-546B	108
121-547	108
121-551	108
121-552	160
121-553	160
121-554	126
121-555	126
121-557	103A
121-558	103A
121-560	108
121-580	161
121-581	123A
121-582	124
121-585	107
121-585B	107
121-587	123A
121-588	175
121-600	123A
121-600(ZENITH)	154
121-601	160
121-602	159
121-603	159
121-608	159
121-610	123A
121-612	229
121-612-16	108
121-613	229
121-613-16	108
121-614	108
121-614-9	108
121-615	106
121-616	108
121-629	123A
121-630	108
121-632	102A
121-633	102A
121-634	102A
121-635	102A
121-636	102A
121-637	108
121-638	108
121-638B	108
121-639	123A
121-639CL	128
121-640	102A
121-641	103A
121-660	123A
121-662	123A
121-671	123A
121-675	123A
121-676	128
121-677	123A
121-678	123A
121-679	159
121-687	107
121-692	161
121-695	123A
121-697	160
121-698	160
121-699	159
121-699-02	159
121-701	123A
121-704	161
121-706	123A
121-707	185
121-708	184
121-709	185
121-710	184
121-711	123A
121-712	157
121-713	124
121-714	160
121-719	152
121-722	128
121-723	107
121-726	130
121-726A	130
121-730	123A
121-731	132
121-732	161
121-734	102
121-735	107
121-735B	107
121-737	123A
121-737CL	128
121-742	108
121-743	154
121-743-01	191
121-744	154
121-745	123A
121-746	159
121-748	123A
121-751	123A
121-752	172A
121-753	108
121-754	229
121-755	190
121-756	132
121-758	164
121-758X	164
121-759	165

To Be Replaced	ECG Replacement
121-759X	165
121-760	161
121-761	161
121-762	101
121-762CL	103A
121-764	123A
121-765	129
121-765-01	288
121-766	128
121-766-01	287
121-767	199
121-767CL	123A
121-768	199
121-768CL	123A
121-770	152
121-770CL	196
121-770X	152(2)
121-772CL	196
121-772X	184(2)
121-773	123A
121-773CL	128
121-774	159
121-774CL	129
121-775	161
121-776	154
121-777	159
121-777-01	154
121-782(FET)	222
121-783	222
121-784	222
121-785	222
121-786	222
121-787	222
121-792	154
121-793	121
121-803	153
121-804	152
121-808	184
121-819	108
121-821	164
121-822	171
121-823	161
121-824	161
121-825	108
121-826	222
121-827	108
121-829	162
121-830	100
121-831	165
121-834	108
121-835	108
121-836	123A
121-837	123A
121-838	159
121-841	108
121-843	190
121-844	128
121-845	129
121-846	108
121-848	108
121-849	107
121-850	123A
121-851	108
121-853	196
121-855	108
121-856	123A
121-857	108
121-858	312
121-860	133
121-861	159
121-862	123A
121-863	123A
121-865	159
121-868	171
121-868-01	171
121-868-02	171
121-869	108
121-873	153
121-874	152
121-875	159
121-877	123A
121-878	128
121-879	129
121-880	196
121-881	123A
121-883	161
121-884	108
121-885	107
121-886	153
121-887	152
121-888	123A
121-889	123A
121-895	123A
121-895A	123A
121-898	108
121-899	108
121-900	108
121-911	157
121-921-01	152
121-922-01	152
121-924	161
121-925	108
121-926	153
121-926-01	153
121-927	152
121-927-01	152
121-931	123A
121-932	108
121-933	159
121-950	123A
121-951	233
121-952	129
121-953	222
121-954	229
121-966	152

To Be Replaced	ECG Replacement
121-966-01	152
121-967	196
121-968	107
121-969	292
121-969-02	153
121-970	291
121-970-02	152
121-972	123A
121-972-01	123A
121-973	129
121-974	107
121-975	123A
121-976	152
121-976-01	152
121-977	153
121-977-01	153
121-978	159
121-980-01	189
121-980(B.C.E.)	242
121-980(E.B.C.)	189
121-982	123A
121-985	165
121-986	159
121-987	291
121-987-02	196
121-988	292
121-988-02	197
121-989	171
121-990	171
121-992	291
121-992(V. REG)	187
121-993	286
121-994	292
121-996	163A
121-997	153
121-1003	238
121-1004	123A
121-1005	159
121-1006	152
121-1007	129
121-1008	291
121-1009	292
121-1012	262
121-1013	261
121-1014	190
121-1015	165
121-1016	288
121-1017	287
121-1019	159
121-1020	188
121-1021	189
121-1024	222
121-1028	286
121-1029	238
121-1030	222
121-1032	102
121-1033	102
121-1034	102
121-1035	102
121-1036	102
121-1124	121
121-1134	121
121-1330	100
121-1350	100
121-1360	100
121-1390	100
121-1400	100
121-1410	101
121-5065	123A
121-505501	123A
121G3019	123A
121G3020	123A
121G3051	311
121G3051D	311
121G3115	311
121G3123	311
121GI241	506
121J688-1	107
121J688-2	107
121S2	6402
121(SEARS)	123A
121U2AT	6402
121U3AC	6402
122-1	123A
122-2	123A
122-2(SYL)	116
122-3(SYL)	116
122-6	123A
122-7	199
122-7(RCA)	199
122-80	116
122-229	100
122-1028	105
122-1028A	105
122-1625	121
122-1648	126
122-1962	103
122-A484	108
122GRN	159
122N2	283
122YEL	159
123-001	724
123-002	220
123-003	133
123-004	123A
123-005	199
123-006	159
123-007	199
123-008	236
123-009	235
123-010	123A
123-011	186A
123-011A	186A
123-012	289
123-013	109

To Be Replaced	ECG Replacement
123-015	109
123-016	177
123-017	172A
123-017(Diode)	519
123-018	506
123-019	5072A
123-020	139A
123-021	116
123-022	177
123-024	519
123-025	177
123-2(SYL)	125
123-3(SYL)	125
123-4(SYL)	125
123B-001	223
123B-002	186A
123B-003	177
123B-004	5072A
123B-005	137A
123B-006	5075A
123N1	164
123S425	128
123S-437	128
124-0028	125
124-0165	5994
124-0178	116
124-1	121
124-1(SYL)	397
124J490	116
124N1	101
124N16	123A
124-N16	101
125-1(SYL)	386
125-4(RCA)	127
125-121	128
125-402	121
125-403	121
125-410	175
125-A000-F01	5883
125A000F01	5883
125A134	102A
125A137	128
125A137A	128
125AS251	175
125B132	123A
125B133	159
125B139	128
125B410	175
125-B415	152
125C3	784
125C3RB	784
125C211	123A
125P1	159
125P1M	159
125P116	159
125PI	159
126-042-9-003	123A
126-1(SYL)	156
126-4	116
126-7(Arvin)	116
126-12	123A
126-40	909
126N1	103A
126N2	103A
126P1	158
127	123A
127-7	101
127-115	199
127A905F01	5995
128	108
128-1(SYL)	287
128-9050	130
128A157F01	5995
128A157F02	5995
128C212H01	9951
128C213H01	910
128C830H05	7493A
128N2	128
128N4	108
128WHT	123A
129-4	176
129-5	121
129-6	104
129-7	104
129-8	102A
129-8-1	102A
129-8-1A	102A
129-8-2	102A
129-9	121
129-10	121
129-11	100
129-13	121
129-14	123
129-15	123
129-16	123A
129-17	102
129-18	102
129-20	159
129-21	123A
129-23	175
129-27	161
129-30	103A
129-31	102A
129-32	102A
129-33	152
129-33(Pilot)	123A
129-34	159
129-34(Pilot)	159
129/181-P1	349
129/181-P2	350
129/181-P3	351
129/181-P4	320
129BRN	123A
129N1	161
129WHT	123A

To Be Replaced	ECG Replacement
130	107
130-013	5695
130-104	121
130-105	5081A
130-112	107
130-138	108
130-144	311
130-146	130
130-149	159
130-150	311
130-152	161
130-152-00	316
130-152-01	316
130-172	311
130-174	311
130-185	161
130-185-98	316
130-191-00	128
130-240	161
130-245	195A
130-265-00	278
130-265-01	278
130-338-00	116
130-398-99	116
130-30189	177
130-30192	116
130-30256	125
130-30261	166
130-30265	177
130-30266	177
130-30274	177
130-30281	109
130-30301	109
130-30313	116
130-30702	177
130-40089	101
130-40095	102A
130-40096	103A
130-40214	123A
130-40215	123A
130-40216	199
130-40229	109
130-40236	102A
130-40294	123A
130-40304	108
130-40311	123A
130-40312	123A
130-40313	123A
130-40314	103A
130-40315	159
130-40317	123A
130-40318	123A
130-40347	103A
130-40349	131&155(CP)
130-40352	102A
130-40357	123A
130-40362	108
130-40421	108
130-40429	159
130-40439	131&155(CP)
130-40456	158
130-40459	108
130-40883	199
130-40896	123A
130-40901	199
130-40922	123A
130A17268	116
130ORN	107
130-VIO	107
130YE	116
131-000561	128
131-000562	121
131-001-007	130
131-005-353-1	197
131-005-807	128
131-005-808	129
131-001007	130
131-005353-1	197
131-005807	128
131-005808	129
131-043-67	130
131-045-60	128
131-045-61	129
131-04367	130
131-04560	128
131-04561	129
131A	113
131A246F01	5995
131A246F02	5995
131(ARVIN)	108
131AS471	941
131N2	191
131N2G	152
131N2(Maganvox)	188
131(SEARS)	108
132-001	102A
132-002	123A
132-003	171
132-004	123A
132-005	123A
132-007	129
132-008	161
132-009	161
132-010	102A
132-011	123A
132-014	171
132-015	108
132-017	123A
132-018	123A
132-019	160
132-020	160
132-021	123A
132-021B	128
132-022	128
132-023	123A

To Be Replaced	ECG Replacement
132-024	185
132-025	162
132-026	123A
132-027	160
132-028	124
132-029	234
132-030	123A
132-031	234
132-032	129
132-033	124
132-038	128
132-039	129
132-041	123A
132-042	123A
132-045	221
132-046	184
132-047	221
132-048	220
132-049	132
132-050	123A
132-051	123A
132-052A	172A
132-054	123A
132-055	123A
132-056	159
132-057	123A
132-059	124
132-062	123A
132-063	123A
132-065	175
132-066	128
132-069	123A
132-070	130
132-072	184
132-074	159
132-075	123A
132-076	161
132-077	123A
132-078	157
132-079	185
132-080	184
132-081	184
132-082	161
132-085	130
132-087	161
132-090	102A
132-1(SYL)	382
132-2	151A
132-3	152
132-4	152
132-5	196
132-90	102A
132-185	161
132-501	123A
132-502	123A
132-503	123A
132-504	123A
132-515	124
132-516	124
132-521	124
132-522	124
132-523	124
132-524	124
132-525	124
132-526	124
132-539	123A
132-540	123A
132-541	130
132-542	130MP
132N1	128
133-001	726
133-001B	726
133-002	710
133-003	724
133-004	725
133-005	724
133-0021-0	904
133-1	188
133-3	152
133P00195	7430
133P100	9109
133P80014	7430
133P80026	7483
133P80029	7492
133P80057	909
133P80067	941D
133P80104	941M
134/060-P1	349
134/060-P2	350
134/060-P3	320
134/060-P4	320
134-1	189
134/104-P1	339
134/164-P1	363
134/164-P2	363
134/171-P1	367
134/171-P2	367
134/239	366
134B1037	717
134P1	234
134P1A	159
134P1AA	129
134P1M	159
134P2	129
134P4	159
134P4AA	159
134P4M	159
135-3	116
135C44322-542	123A
135N1	154
135N1M	154
135ORN	123A
135P4	117
136-000100	358
136-000200	358

To Be Replaced	ECG Replacement
136-000300	358
136P1	106
136RED	123A
137-003	5697
137-684	125
137-718	116
137-737	5802
137-759	145A
137-824	109
137-828	125
137(Admiral)	159
138-4	123A
138-4(Coronado)	233
139-4	108
139-4(Coronado)	161
139N1	229
139N1D	229
139N2	161
140-0007	123A
140-013	116
140N1C	130
140N2	130
141-003	109
141-078-0001	177
141 402	161
142-001	123A
142-002	199
142-002(Rect.)	125
142-002(Regency)	199
142-003	199
142-004	152
142-005	289
142-006	186A
142-006(Diode)	177
142-006(Regency)	186A
142-007	282
142-008	152
142-009	177
142-010	177
142-011	109
142-012	139A
142-013	116
142-014	116
142-015	5075A
142-016	5071A
142-1(SYL)	125
142-2(SYL)	125
142-3	123A
142-3(SYL)	125
142-4	123A
142N1	289
142N1P	161
142N3	123A
142N3T	123A
142N4	123A
142N5	123A
142N6	108
143-05	960
143-1	912
143C08	964
144-1	519
144-3	177
144-4	154
144A-1	121
144A-1-12	121
144A-1-12-8	121
144N1	171/403
144N1G	171/403
144N2	171
144N6	154
145-1(SYL)	191
145-2(Syl.)	171
145-100	140A
145-118	139A
145-470	5088A
145A9254	116
145A9786	116
145aa	4511B
145N1	161
145N1(Last IF)	233
145N1P	161
145-T1B	126
146B-3	121MP
146B-3-12	121MP
146B-3-12-8	121MP
146D1	178MP
146D1B112	178MP
146N3	123A
146N5	123A
146-T1	121
147-7009-01	159
147-7016-01	199
147N1	293
147P2	294
147-T1	121
148-3	506
148-134622	105
148N1	128
148N2	123A
148N3	128
148N4	128
148N212	123A
148P-2	102A
148P-2-12	102A
148P-2-12-8	102A
149-142-G1	177
149L-4	102A
149L-4-12	102A
149L-4-12-8	102A
149N1	184
149N2	184
149N2B	241
149N2D	152
149N4	184
149N4B	241

To Be Replaced	ECG Replacement
149N2002D	152
149N2004	152
149N2010	186A
149P1	185
149P1B	242
149P1D	152
149P3	185
149P4B	242
149P2001D	153
149P2003	153
150	116
150-001-005	109
150-001-9-005	109
150-001-9-007	109
150-002-9-001	109
150-004-9-001	109
150-005-9-001	109
150-006-9-001	109
150-012-9-001	506
150-013-9-001	109
150-014-9-001	109
150-015-9-001	110
150-015-9-112	110(6)
150-016-9-001	109
150-016-9-001(12)	109
150-030-9-002	178MP
150-040-9-002	177
150-066-9-001	519
150-1	177
150-1N	161
150N1	161
150N2	123A
150N3	161
150R1B	156
150R2B	5802
150R3B	5803
150R4B	5804
150R5B	5806
150R6B	5806
150R7B	5808
150R8B	156
150R9B	156
150R10B	156
151-001-9-001	177
151-002-9-001	177
151-006-9-001	147A
151-0040	101
151-0040-00	101
151-0087-00	159
151-0096-00	128
151-011-9-001	177
151-011-9-011	116
151-012-9-001	139A
151-013-9-001	178MP
151-014-9-001	507
151-014-9-1	177
151-015-9-001	519
151-018-9-001	116
151-021-9-001	177
151-022-9-001	177
151-022-9-002	177
151-023-9-001	116
151-024-9-001	177
151-025-9-001	117
151-028-9-001	519
151-029-9-001	177
151-029-9-002	177
151-029-9-003	116
151-030-9-001	177
151-030-9-002	178MP
151-030-9-003	137A
151-030-9-004	614
151-030-9-005	116
151-030-9-006	177
151-030-9-009	177
151-031-9-001	137A
151-031-9-003	137A
151-032-9-001	177
151-032-9-002	177
151-032-9-004	177
151-034-9-001	177
151-035-0-003	177
151-035-9-001	519
151-035-9-003	177
151-035-9-004	519
151-040-7-003	116
151-040-9-001	177
151-040-9-002	177
151-040-9-003	116
151-042-9-001	177
151-045	126
151-045-9-001	116
151-045-9-002	177
151-045-9-003	506
151-046-9-001	116
151-049-9-001	177
151-049-9-002	177
151-049-9-003	116
151-049-9-007	601
151-051-9-001	519
151-059-9-001	519
151-060-9-001	519
151-061-9-001	519
151-062-9-001	611
151-064-9-001	519
151-064-9-002	519
151-066-9-001	177
151-067-9-001	177
151-069-9-001	519
151-070-9-001	613
151-072-9-001	610
151-075-9-001	138A
151-076-9-001	5101A
151-081-9-001	5313
151-085-9-002	5016A

To Be Replaced	ECG Replacement
151-089-9-001	139A
151-096-1C	128
151-0103-00	123A
151-0124-00	159
151-0127-00	123A
151-0136	128
151-0136-00	128
151-0136-02	128
151-0138	108
151-0140	130
151-0140-00	130
151-0141	175
151-0141-00	175
151-0148	175
151-0149	175
151-0149-1A	175
151-0188-00	159
151-0190-00	123A
151-0208	129
151-0208-00-AA	129
151-0210	124
151-0210-00	124
151-0211	128
151-0211-00	128
151-0211-01	128
151-0217	175
151-0217-1	175
151-0219-00	234
151-0221-00	159
151-0221-02	159
151-0223-00	123A
151-0224-00	123A
151-0238	101
151-0241	124
151-0241-00	124
151-0250-00	194
151-0251	124
151-0259-00	107
151-0274-00	194
151-0275	181
151-0275-00	181
151-0302-00	123A
151-0315	124
151-0315-00	124
151-0316	124
151-0325-00	159
151-0336-00	130
151-0336-00-A	130
151-0337-00	130
151-0337-00-A	130
151-0341-00	199
151-0341-00-A	199
151-0342-00	234
151-0347-00	194
151-0407-00	194
151-0410-00	234
151-0417-00	106
151-0424-00	123A
151-0427-00	107
151-0453-00	234
151-0456-00	199
151-0458-00	159
151-0459-00	159
151-0471-00	107
151-1	116
151 32-9-004	177
151-148-00-BC	175
151-150	128
151-150-1B	128
151-211	128
151-267-9-001	177
151-1002	126
151M11	108
151N1	108
151N2	123A
151N4	123A
151N5	123A
151N11	108
151N116	108
152	135A
152-006-9-001	147A
152-008-9-001	139A
152-0047	5804
152-0047-00	5804
152-0061-00	177
152-012-9-001	139A
152-019-9-001	137A
152-021-9-001	141A
152-029-9-002	147A
152-042-9-001	5072A
152-042-9-001(Zener)	5072A
152-042-9-002	5071A
152-047	116
152-047-9-001	137A
152-047-9-004	137A
152-051-9-001	139A
152-052-9-002	137A
152-054-9-001	5072A
152-057-9-001	5075A
152-069-9-001	135A
152-075-9-001	138A
152-079-9-001	135A
152-079-9-002	137A
152-079-9-003	137A
152-079-9-004	138A
152-082-9-001	139A
152-085-9-001	5018A
152-086-7-001	5018A
152-087-9-001	139A
152-088-9-001(TRANS)	159A
152-088-9-001(ZENER)	135A
152-089-9-001	5073A
152-094-9-001	137A
152-0154	5642

To Be Replaced	ECG Replacement
152-0242-00	177
152-0333-00	519
152-141-1	519
152-221011	102A
152CB	5626
152N2	130
152N2C	181
152P1B	218
152P1C	180
153-008-9-001	614
153-008-9-002	601
153-009-9-001	611
153-011-9-001	605
153-085-9-002	5016A
153N1	196
153N1C	152
153N2C	152
153N3	152
153N4C	152
153N5C	152
153N6	152
154-000-9-001	614
154-004-9-001	613
154-500(SYL)	610
154A3675-105	102
154A3676	126
154A3676-205	102
154A3677	126
154A3679	102
154A3679-5110	126
154A3680	121
154A3992	116
154A5941	123A
154A5943	124
154A5943-1	124
154A5946	123A
154A5946-667	129
154A5947-7732	106
154A8681	102
154T1	160
154T1A	160
154T1B	160
155N1	196
155T1	160
156	123A
156-0011-00	9914
156-0012-00	9923
156-0013-00-A	910
156-0015-00	909
156-0017	903
156-0017-00	903
156-0048-00	912
156-0049-00	941
156-0053-00	923
156-0067-00	941M
156-0067-06	941M
156-0071-00	923D
156-032	130
156-043	130
156-043A	130
156-053	130
156-063	130
156-0148-00	7404
156-0151-00	915
156-0176-00	309K
156-0197	912
156-0197-00	912
156-0197-3306	912
156T1	160
156WHT	123A
157	159
157-007-9-001	109
157-009-9-001	5072A
157-047-9-001	109
157-100	140A
157N3	188
157P4	189
157T1	160
157YEL	159
158-045-0027	128
158-1(SYL)	123A
158-10	124
158P1M	129
158P2	159
158P2M	159
158P3	159
158(Sears)	123A
159T1	160
160	142A
160-2(SYL)	233
160-3(SYL)	319
160-4(SYL)	123A
160-5(SYL)	229
160-46-6501	159
160P08908	165
160T1	160
161-006-0001	9905
161-006-0002	9905
161-011-0001	9903
161-011-0002	9903
161-011J	123A
161-012-0002	9907
161-012J	159
161-015G	288
161-016K	123A
161-2NC	130
161-5	196
161-118-0001	9910
161-152-0101	9914
161-152-0102	9914
161-249-1001	949
161A(SONY)	1309
161-INC	130
161N1C	130
161N2	130MP
161N4	130
161N4C	130
161T1	160
161T2	108
162-005A	116
162J2	116
162N2	184
162P1	185
162(SONY)	1310
162T1	160
162T2	108
163-2(SYL)	107
163-3(SYL)	107
163J2	116
164-003A	605
164A(SONY)	1302
164J2	116
165	113
165-1A82	160
165-1(SYL)	156
165-2A82	103A
165-2(SYL)	156
165-4A82	101
165-44-9301	123A
165-432-2-48-1	519
165A-182	160
165A4378P2	177
165A4383	123A
165B-182	160
165C-182	121
165J2	116
166	115
166-1A82	102A
166-2A82	102A
166-3A82	102A
166J2	116
167-9	192
167J2	125
167N1	123A
167N2	123A
168-9	193
168-107-001	177
168J2	156
168N1	123A
168P1	121MP
169-257	124
169-284	124
170-1	177
170-9	128
170(RCA)	161
170(SONY)	1303
171-001-9-001	121
171-003-9-001	124
171-015-9-001	121
171-016-9-001	131
171-9	129
172-001	224
172-001-9-001	224
172-003-9-001	130
172-003-9-001A	130
172-006-9-001	186
172-007-9-001	237
172-008-9-001	237
172-009-9-001	237
172-010-9-001	152
172-011-9-001	186A
172-013-9-001	236
172-014-9-001	152
172-014-9-002	282
172-014-9-003	152
172-014-9-007	152
172-024-9-001	186A
172-024-9-002	235
172-024-9-003	236
172-024-9-004	152
172-024-9-005	130
172-026-9-001	152
172-028-9-001	235
172-029-9-001	236
172-029-9-001(R.F.Pwr)	236
172-031-9-003	152
172-038-9-001	295
172-038-9-002	235
172-038-9-003	186A
172-040-9-001	130
172-1(SYL)	506
172-2(SYL)	506
172-8(Coronado)	171
172(SONY)	1304
173-1(SYL)	220
173-1(Sylvania)	132
173-15	5075A
173A04490-1	108
173A04490-2	108
173A419-2	121
173A3936	121
173A3963	121
173A3970	102
173A3981	116
173A3981-1	116
173A4057	123A
173A4348	102A
173A4349	102A
173A4389-1	102A
173A4390	102A
173A4391	128
173A4393	116
173A4399	123A
173A4416	123A
173A4419	121
173A4419-1	121
173A4419-2	121
173A4419-3	121
173A4419-4	121
173A4419-5	121
173A4419-6	121
173A4419-7	121
173A4419-8	121
173A4419-9	121
173A4419-10	121
173A4420	121
173A4420-1	121
173A4420-5	121
173A4421-1	121
173A4422-1	121
173A4424	120
173A4436	121
173A4469	121
173A4470-11	123A
173A4470-13	123A
173A4470-32	123A
173A4483-1	159
173A4483-2	159
173A4489-2	128
173A4490-5	128
173A-4490-5	128
173A4490-7	152
173A-4490-7	152
173A4491-2	130
173A4491-2A	130
173A4491-4	130
173A4491-5	152
173A-4491-5	152
173A4491-7	130
173A4491-8	152
173(SONY)	1305
174-002-9-001	103A
174-1	116
174-1(Philco)	190
174-1(SYL)	125
174-2	116
174-2(SYL)	125
174-2(Syl.)	171
174-3	116
174-3A82	100
174-3(SYL)	125
174-4(SYL)	156
174-5(SYL)	125
174-20989-22	130
174-20989-23	124
174-25566-01	129
174-25566-21	128
174-25566-50	128
174-25566-62	129
174-25566-63	128
174-25566-76	128
175-006-9-001	102A
175-007-9-001	102A
175-008-9-001	102A
175-010-9-001	153
175-1(SYL)	172A
175-2(Philco)	172A
175-3	172A
176-003	108
176-003-9-001	108
176-004	128
176-004-9-001	108
176-005	108
176-005-9-001	108
176-006	108
176-006-9-001	108
176-006-9-002	199
176-007	108
176-007-9-001	108
176-008-9-001	123A
176-02-9-001	199
176-014-9-001	123A
176-016-9-001	289
176-017-9-001	123A
176-018-9-001	195A
176-024-9-001	123A
176-024-9-002	235
176-024-9-003	236
176-024-9-004	186
176-025-9-001	199
176-025-9-002	107
176-026-9-001	229
176-029-9-001	289
176-029-9-002	195A
176-029-9-003	195A
176-029-9-004	295
176-031-9-001	289
176-031-9-002	199
176-037-9-001	229
176-037-9-002(NPN)	298
176-037-9-002(PNP)	299
176-037-9-003	199
176-037-9-004	199
176-039-9-001	229
176-040-9-001	130
176-042-9-001	229
176-042-9-002	123A
176-042-9-003	199
176-042-9-004	199
176-042-9-005	186A
176-042-9-006	289
176-042-9-007	152
176-043-9-002	289
176-044-9-001	236
176-044-9-002	316
176-044-9-003	316
176-047-9-001	289
176-047-9-002	123A
176-047-9-003	123A
176-048-9-001	289
176-048-9-002	289
176-049-9-002	289
176-049-9-003	316
176-054-9-001	123A
176-055-9-004	152
176-056-9-001	229
176-056-9-003	229
176-056-9-005	297
176-056-9-006	199
176-060-9-001	229
176-060-9-002	229
176-060-9-003	199
176-060-9-004	295
176-062-9-001	199
176-065-9-001	229
176-070-9-001	322
176-072-9-005	233
176-073-9-001	107
176-073-9-002	236
176-073-9-003	315
176-073-9-012	236
176-074-9-001	229
176-074-9-002	295
176-074-9-003	235
176-074-9-004	128
176-075-9-001	229
176-075-9-002	123A
176-075-9-003	229
176-075-9-004	199
176-075-9-005	199
176-075-9-006	295
176-075-9-007	235
176-075-9-008	306
176-081-9-001	229
176-081-9-002	229
176-081-9-003	229
176-081-9-004	235
176-082-9-001	229
176-085-9-001	229
176-085-9-002	108
176-085-9-003	128
176-087-9-001	295
176-087-9-002	236
176-089-9-002	229
176-089-9-003	199
176-089-9-005	295
176-089-9-007	235
176-1(SYL)	171
177-001	129
177-001-9-001	129
177-006-9-001	159
177-006-9-002	290
177-007-9-001	234
177-012-9-001	159
177-018-9-001	294
177-019-9-003	159
177-020-9-001	294
177-023-9-001	153
177-024-9-001	290
177-025-9-001	290
177-025-9-002	129
177-027-9-001	234
177-032-9-001	159
177-037-9-001	159
177A01	798
177A01A	798
177A02	748
177A03	738
177A05	749
177A07	767
177A-1-82	105
177B01	798
177B02	748
177B-1-82	121MP
177C-1-82	121MP
177(SONY)	1306
178-1(Philco)	193
178-1(SYL)	193
179-062-9-001	199
179-065-9-001	229
179-081-9-003	229
179-1(SYL)	5099A
179-2(SYL)	145A
179-4	140A
179-4(SYL)	140A
179-5(SYL)	5079A
179-6(SYL)	142A
179-7(SYL)	5097A
179-8(SYL)	5082A
179-46444-01	9910
179-46444-02	9914
179-46444-04	9923
179-46444-05	9913
179-46445-01	9932
179-46445-02	9933
179-46445-03	9937
179-46445-05	9948
179-46445-06	9949
179-46445-08	9961
179-46445-09	9963
179-46445-10	9094
179-46447-01	910
179-46447-03	909D
179-46447-07	923
179-46447-08	941
179-46447-16	911
179-46447-17	940
179-46447-21	915
180-1	116
180-1(SYL)	188
180-52-6302	4000
180N1	233
180T2	130
180T2A	130
180T2B	130
180T2C	130
181-000100	760
181-000200	718
181-003-9-001	6408
181-005-9-001	5461
181-1(SYL)	389
181-2(SYL)	389
181-3(SYL)	389
181(SONY)	1307
181T2A	130
181T2B	280
181T2C	130
182-009-9-001	132
182-014-9-002	133
182-014-9-003	133
182-015-9-001	132
182-021-9-001	132
182-028-9-001	312
182-029-0-001	312
182-029-9-001	312
182-037-9-001	312
182-038-9-001	222
182-038-9-001(Diode)	109
182-039-9-001	312
182-042-9-001	222
182-044-9-001	312
182-044-9-002	312
182-045-9-001	312
182-046-9-001	312
182-048-9-001	312
182-049-001	221
182-049-9-001	222
182-055-9-001	312
182-056-9-001	312
182-1(SYL)	162
182-2(SYL)	162
182-30-3801	123AP
182-138-9-001	222
182B2003JDP1	128
182T2A	284
182T2B	284
182T2C	284
183-0(SYL)	5421 or 5452
183-1(SYL)	5421
183-1(Sylvania)	5421
183P1	129
183T2A	283
183T2B	283
184-1(SYL)	6402
184-12(Coronado)	199
184A-1	121
184A-1-12	121
184A-1-12-7	121
184A-1L	121
184A-1L8	121
184R	313
184T2A	283
184T2B	283
184T2C	162
185-001	186A
185-002	229
185-003	123A
185-004	123A
185-005	199
185-006	289
185-007	152
185-008	282
185-009	123A
185-010	199
185-011	177
185-012	177
185-013	109
185-014	116
185-015	139A
185-1(SYL)	210
185-6(RCA)	116
185-9-02	5634
185-12(Coronado)	159
185-736	175
185T2A	283
185T2B	283
186-001	229
186-002	123A
186-003	199
186-004	199
186-005	199
186-006	289
186-007	123A
186-008	186A
186-009	186A
186-010	282
186-011	177
186-011(Diode)	177
186-011(Transistor)	282
186-012	177
186-013	109
186-014	116
186-015	177
186-016	139A
186-1(SYL)	147A
186-11(Coronado)	165
186B-3	121MP
186B-3-12	121MP
186B-3-127	121MP
186B-3L	121MP
186B-3L8	121MP
186N1	161
186N1(Last IF)	233
187-1	150A
187-1(SYL)	5047A
187-2	151A
187-2(SYL)	5050A
187-3(SYL)	5029A
187-4(SYL)	5031A
187-5(SYL)	5048A
187-6	140A
187-6(SYL)	5019A
187-7	5081A
187-7(SYL)	5019A
187-10(SYL)	5055A
187-11(SYL)	5021A
187-12(Coronado)	196
187-12(SYL)	5011A
187-13(SYL)	5052A
187-14(SYL)	5006A
187-15(SYL)	5032A
187-16(SYL)	5033A
187-17(SYL)	5007A
187-18(SYL)	5024A
187-19(SYL)	5008A
187-21(SYL)	5022A
187-23(SYL)	5030A
187-24(SYL)	5020A
187-26(SYL)	5015A
188-1(SYL)	182
188-2(SYL)	130
188-5	5675
188-12(Coronado)	197
188-68-35	120
188-70-48	120
188-826	121
188B-1-82	160
188C-1-82	100
188P-2	102A
188P-2-12	102A
188P-2-127	102A
188P-2L	102A
188P-2L8	102A
189	108
189-1(SYL)	507
189-30-8484	163A
189L-4	102A
189L-4-12	102A
189L-4-127	102A
189L-4L	102A
189L-4L8	102A
189N1	238
189N1G	238
190-1(ROUND)	5304
190-1(SQUARE)	5314
190-1(SYL)	168
190N1	190
190N1C	184
190N1D	190
190N3	184
190N3C	184
190V039H18	118
191-12(Coronado)	199
192-1A82	105
192-10(Coronado)	124
192N2T	238
194N1	238
194N3D	165
195	199
195N1	152
195N1D	152
195N3	152
195P2	153
195P2C	197
195P4	153
196-654	116
198T013P01	548
198T013P02	548
198T016P01	545
199-Power	121
200-007	108
200-010	108
200-011	128
200-015	108
200-016	123
200-018	175
200-052	159
200-053	132
200-055	108
200-056	108
200-057	123A
200-058	123A
200-064	132
200-076	152
200-12	128
200-846	123A
200-856	103A&158(CP)
200-862	123A
200-863	123A
200-6582	156
200-6582-22	117
200A	103
200AGEL3731	127
200AGEO3730	127
200R1B	156
200R3B	5803
200R5B	5805
200R6B	5806
200R7B	156
200R8B	156
200R9B	156
200R10B	156
200RB4	5804
201	159
201-0723A	5073A
201-15	102A
201-25-4343-12	108
201-254323-12	108
201-254323-13	108
201-254343-12	108
201-254343-13	107
201-254343-22	161
201-254343-26	161
201-254343-28	107
201-254343-30	107
201-254343-33	107
201-283818-1	222
201-283818-2	222
201-283818-3	222
201A	160
201A0723	5072A
201A(SCR)	5521
201B	160
201B(SCR)	5522
201C(SCR)	5523
201D(SCR)	5524
201E(SCR)	5525
201F(SCR)	5526
201H(SCR)	5527
201K(SCR)	5528
201M	5529
201P	5530
201S(SCR)	5531
202-1	189
202-5-2300-01710	116
202-5-9531-01010	177
202-209	5069A
202A	103
202A(SCR)	5501
202B(SCR)	5502
202C(SCR)	5503
202D(SCR)	5504
202E(SCR)	5505
202F(SCR)	5506
202H(SCR)	5507
202K(SCR)	5508
202M	5529
202N1	189
202P	5530
202P1	189
202P2	189
202S	5531
203	116
203-1	222
203-4	222
203-6	222
203A(SCR)	5521
203B(SCR)	5522
203C(SCR)	5523
203D(SCR)	5524
203E(SCR)	5525
203F(SCR)	5526
203H(SCR)	5527
203K(SCR)	5528
203M	5529
203P	5530
203S	5531
203S4D	222
204-1	177
204-1(SYL)	177
204A(SCR)	5521
205-18-0011	228A
205-142-G1	178MP
205A2-210	102A
206-709-001	909
206(IC)	1075A
207-8(Coronado)	128
207A	160
207A1	160
207A3	102A
207A7	102A
207A9	108
207A10	123A
207A14	234
207A16	175
207A16A	175
207A17	199
207A20	104
207A20A	104
207A25	107
207A27	161
207A29	123A
207A30	152
207A31	123A
207A32-B	5642
207A33	152
207A35	123A
207A(SCR)	5470
207B	160
207B(SCR)	5471
207C(SCR)	5472
207D(SCR)	5472
207E(SCR)	5473
207H(SCR)	5485
207K(SCR)	5486
207M	160
207M(SCR)	5487
207V073C04	159
209-1	159
209-30	152
209-31	109
209-32	177
209-846	123A
209-856	103A&158
209-862	123A
209-863	123A
209A(LED)	3007
209P1	159
210ATTF3638	159
210BWTF4121	106
211-58	5804
211-40140-18	130
211A6380-1	130
211A6380-3	152
211A6381-1	175
211A6381-2	152
211A6381-i	175
211A6382-2	152
211AESU3055	130
211ATPE3391	159
211AVPF3415	123A
211AVTE4275	123A
211Z4	141A
212-00102	500A
212-00104	500A

To Be Replaced	ECG Replacement
212-18	116
212-21	116
212-23	116
212-25	116
212-27	116
212-33	116
212-35	116
212-36	116
212-37	116
212-39	116
212-40	116
212-41	116
212-42	116
212-46	120
212-47	116
212-48	118
212-49	116
212-50	116
212-51	116
212-58	116
212-61	116
212-62	116
212-63	120
212-64	116
212-65	116
212-66	502
212-67	502
212-68	506
212-70	116
212-71	116
212-72	116(4)
212-76	116(4)
212-76-02	116
212-77	116
212-79	116
212-80	506
212-85	118
212-85B	118
212-87-01	714
212-92	116
212-94	116
212-95	504
212-102	521
212-103	521
212-104	521
212-105	521
212-106	521
212-108	501A
212-109	501A
212-110	501A
212-128	521
212-129	521
212-130	521
212-130X	521
212-131	521
212-132	521
212-133	521
212-134	521
212-135	521
212-136	521
212-139	500A
212-139-01	500A
212-139-02	500A
212-139-03	522
212-140	521
212-140-01	521
212-141	523
212-141-01	523
212-141-02	526A
212-141-03	526A
212-141-04	526A
212-141-05	526A
212-142	522
212-142-01	522
212-143	530
212-144	530
212-145	528
212-145-01	528
212-145-02	528
212-146	528
212-146-01	528
212-146-02	528
212-192	116
212-254	116
212-695	123A
212-699	159
212-741-005	5484
213N2	128
215-51	116
215-58	116
215-76(GE)	116
215-37567	199
215Z4	145A
216-001-001	152
216N2	165
217-1	108
217N1	163
217N2	163A
217N4	163A
217(RCA)	161
218-22	123A
218-23	123A
218-24	123A
218-25	123A
218-26	128
218-A-464-PM	5695
218A4164P1M	5695
219-7(SYL)	113
220	175
220-001001	123A
220-001002	123A
220-001011	108
220-001012	108
220-002001	131
220-003001	116

To Be Replaced	ECG Replacement
220-008001	132
220AACC9960	9960
221-0048	712
221-30	909
221-31	703A
221-32	703A
221-34	708
221-36	705A
221-37	705A
221-39	705A
221-40	707
221-41	707
221-42	714
221-42-1	714
221-43	715
221-43-1	715
221-45	731
221-45-01	731
221-46	790
221-46-1	790
221-48	712
221-49	739
221-51	790
221-52	790
221-62	790
221-62-1	790
221-64	1112
221-65	722
221-69	791
221-76	767
221-77	810
221-79	722
221-79-01	722
221-80	1112
221-86	815
221-86-01	815
221-87	714
221-87-01	982
221-89	736
221-90	723
221-96	818
221-96-01	818
221-96C	984
221-98	1231
221G3114	903
221G3114-1	903
221(SEARS)	123A
222-1	5995
222-1(SYL)	183
222-2	5995
222-2(SYL)	182
222-3(SYL)	182
222-4(SYL)	182
222N1	188
223	108
223P1	159
223P1AA	159
224HACA0723	923D
224N1	199
225A6946-P000	7400
225A6946-P003	7403
225A6946-P004	7404
225A6946-P010	7410
225A6946-P020	7420
225A6946-P050	7450
225A6946-P093	7493A
225A6976-P095	7495
226-1	123A
226-1(SYL)	123AP
226-1(Sylvania)	123A
226-3	129
226-4	128
226N1	123A
227-2000D1	113
227-200001	113
228N1	188
228N3	302
229-0050-13	123A
229-0050-14	123A
229-0050-15	123A
229-0122	103A&158(CP)
229-0151-3	108
229-0180-32	161
229-0180-33	161
229-0180-34	108
229-0180-119	161
229-0180-123	123A
229-0180-124	108
229-0180-149	108
229-0182-65	109
229-0185-2	108
229-0185-3	108
229-0190-29	108
229-0190-30	161
229-0190-31	107
229-0190-90	123A
229-0191-29	107
229-0191-30	107
229-0192-18	222
229-0192-19	108
229-0192-20	132
229-0204-4	108
229-0204-6	161
229-0204-23	108
229-0210-14	108
229-0210-19	107
229-0214-40	108
229-0220-9	108
229-0220-14	112
229-0220-19	108
229-0240-20	112
229-0240-25	161
229-0248-45	108
229-0250-10	108
229-0250-11	112

To Be Replaced	ECG Replacement
229-0260-18	107
229-1054-5	116
229-1054-9	116
229-1054-82	116
229-1200-29	112
229-1200-36	123A
229-1301-19	177
229-1301-20	177
229-1301-21	5400
229-1301-22	161
229-1301-23	199
229-1301-24	123A
229-1301-25	506
229-1301-26	190
229-1301-27	172A
229-1301-28	193
229-1301-29	5097A
229-1301-30	5079A
229-1301-31	5097A
229-1301-34	186
229-1301-35	152
229-1301-36	153
229-1301-37	192
229-1301-38	193
229-1301-39	794
229-1301-40	792
229-1301-41	790
229-1301-42	747
229-1301-43	795
229-1301-44	738
229-1301-63	165
229-1301-64	130
229-5100-15U	108
229-5100-15V	108
229-5100-31V	161
229-5100-32	161
229-5100-32V	161
229-5100-33V	108
229-5100-224	108
229-5100-225	108
229-5100-226	108
229-5100-227	126
229-5100-228	108
229-5100-231	109
229-5100-232	116
229-5100-233	116
229-5100-234	116(3)
229-5100-235	506
230-0006	109
230-0014	177
230-0023	139A
231-0000-01	158
231-000-001	102A
231-0004	130
231-0004-01	123A
231-0004-03	123A
231-0006-03	179
231-0008	124
231-0009	102A
231-006B	121
231-0011	121
231-0013	128
231-0015	121
232-0001	116
232-0006	116
232-0006-02	519
232-0007	5897
232-0008	5983
232-0009-31	142A
232-0012	5187A
232-0014	5897
232-1006	156
232-1009	116
232-1011	116
232N1	123A
232N2	123A
233N1	165
233(SEARS)	128
235	100
235-8(SYL)	109
236-0002	9932
236-0003	9946
236-0005	7400
236-0006	7403
236-0007	7404
236-0008	7405
236-0009	7473
236-0012	9807
236-0017	9962
239A7920	196
239A7921-1	197
241-15A	160
241ABNG4148	519
241B	128
242-997	6401
245N1B	163A
245N2B	163A
246P	159
246P1	159
247-016-013	108
247-3(SYL)	116
247-255	116
247-256	103A
247-257	123A
247-621	116
247-623	102A
247-624	121
247-625	128
247-626	128
247-629	123A
247AS-C0450-001	923
247AS-C1249-001	123A
248-38104-1	128
249-1L	229
249N1	229

To Be Replaced	ECG Replacement
250-0359	152
250-0373	199
250-0380	229
250-0711	199
250-0712	123A
250-1(SYL)	600
250-1213	289
250-1312	199
250JB05L	5322
250JB05P	5322
250JB1L	5322
250JB1P	5322
250JB2L	5322
250JB2P	5322
250JB4L	5324
250JB4P	5324
250JB6L	5326
250JB6P	5326
250R1B	5801
250R2B	5802
250R3B	5803
250R4B	5804
250R5B	5805
250R6B	5806
250R7B	5808
250R8B	5808
250R9B	5809
250R10B	5809
251M1	103
252-113002-001	911
253-9000-922	123A
257-1(SYL)	157
258-1	188
258-2	189
260-10-006	132
260-10-010	195A
260-10-011	177
260-10-016	159
260-10-020	123A
260-10-021	289
260-10-023	199
260-10-024	152
260-10-025	109
260-10-026	229
260-10-027	290
260-10-032	177
260-10-033	116
260-10-035	1102
260-10-036	1100
260-10-039	290
260-10-040	229
260-10-041	297
260-10-042	199
260-10-043	236
260-10-044	5072A
260-10-046	137A
260-10-047	177
260-10-048	109
260-10-049	177
260-10-051	229
260-10-052	154
260-10-053	236
260-10-054	152
260-10-055	236
260-10-056	316
260-10-057	519
260-10-20	123A
260-10-46	137A
260-61-011	177
260-61-047	177
260-61-067	177
260D00401	102A
260D00402	102A
260D00403	102A
260D00404	102A
260D00507	109
260D02501	102A
260D02601	102A
260D02701	158
260D05701	108
260D05704	107
260D05707	108
260D07201	154
260D07412	123A
260D07901	128
260D08013	107
260D08214	210
260D08514	102A
260D08601	128
260D08701	128
260D08801	123A
260D08912	158
260D09001	123A
260D09301	130
260D09314	123A
260D09413	102A
260D09612	128
260D106A1	123A
260D13701	199
260D13702	123A
260D13704	102A
260D15901	199
260D15902	289
260M00101	123AP
260M00201	289
260M00301	289
260M00401	222
260P01209	121
260P02903	123A
260P02903A	123A
260P02908	123A
260P03001	158
260P03201	161
260P03201A	161
260P04001	123A

To Be Replaced	ECG Replacement
260P04002	123A
260P04003	123A
260P04004	123A
260P04502	123A
260P04503	123A
260P04505	123A
260P05402	107
260P05402A	107
260P05801	108
260P05901	161
260P05901A	161
260P06901	108
260P06902	108
260P06903	108
260P06904	123A
260P06905	289
260P07001	123A
260P07002	123A
260P07004	108
260P07301	123A
260P07502	131
260P07601	158
260P07701	123A
260P07702	123A
260P07703	123A
260P07704	123A
260P07705	123A
260P07707	123A
260P07901	108
260P08001	108
260P08201	159
260P08401	108
260P08601	175
260P08801	123A
260P08801A	123A
260P08901	165
260P08908	283
260P09201	161
260P09402	124
260P09501	164
260P09508	164
260P09701	165
260P09902	123A
260P1060	108
260P1300	126
260P1601	161
260P1760	107
260P2100	102A
260P4002	123A
260P10003	128
260P10003A	128
260P10005	128
260P10301	154
260P10403	108
260P10501	108
260P10502	108
260P10601	161
260P10602	108
260P10707	123A
260P10801	154
260P11101	108
260P11101A	108
260P11102	233
260P11209	165
260P11302	123A
260P11303	123A
260P11304	123A
260P11305	123A
260P11403	159
260P11502	123A
260P11503	123A
260P11504	123A
260P11505	123A
260P12001	123A
260P12002	123A
260P12401	128
260P12481	128
260P12701	152
260P13001	126
260P13604	128
260P13704	129
260P14101	123A
260P14102	123A
260P14103	123A
260P14105	123A
260P14202	196
260P14407	291
260P14501	229
260P15100	124
260P15108	124
260P15201	159
260P15202	159
260P15203	159
260P16009	175
260P16101	161
260P16202	124
260P16208	124
260P16301	108
260P16302	108
260P16502	159
260P16503	159
260P16504	159
260P16603	290
260P16802	298
260P16805	298
260P17002	128
260P17101	123AP
260P17102	123AP
260P17103	123AP
260P17104	123A
260P17105	123A
260P17106	123A
260P17201	108
260P17501	123A
260P17502	199

To Be Replaced	ECG Replacement
260P17503	123A
260P17601	229
260P17602	108
260P17603	108
260P17701	199
260P17702	161
260P17704	199
260P17705	199
260P19009	165
260P19101	123A
260P19103	123A
260P19108	164
260P19208	165
260P19501	123A
260P19503	199
260P19909	162
260P20101	175
260P21001	100
260P21002	100
260P21102	186
260P21104	300
260P21106	210
260P21208	124
260P21308	186
260P21608	165
260P21901	162
260P21908	162
260P22001	132
260P22002	132
260P22003	132
260P22101	154
260P22203	154
260P22204	191
260P22801	186A
260P24008	130
260P24108	165
260P24308	164
260P24408	163A
260P24803	175
260P24901	161
260P26003	288
260P26201	288
260P26301	187A
260P26302	187A
260P28003	287
260P28107	289
260P28401	152
260P28701	186
260P31303	289
260P31402	297
260P33108	165
260P33408	164
260P34008	292
260P34202	196
260P34602	198
260P35101	198
260P35301	287
260P35401	198
260P35502	198
260P36001	159
260P36101	295
260P36201	235
260P36501	108
260P37108	291
260P38101	238
260P39008	165
260P70403	108
260P70501	108
260P70502	108
260P141103	123A
260Z00109	108
260Z00209	108
260Z00309	108
260Z00401	192
260Z00402	123A
260Z00703	158
260Z01201	158
261RAX	192
262-015G	228
264-701508	125
264D00101	177
264D00209	177
264D00505	116
264D00507	5070A
264D00612	109
264D00701	109
264D00801	110
264D00901	109
264D0701	110
264D01001	109
264D01112	116
264D03501	116
264D11003	5071A
264P0080	109
264P00401	109
264P00501	113
264P00502	113
264P00506	113
264P00601	116
264P00602	125
264P00801	109
264P01011	116
264P01012	116
264P01301	109
264P01305	109
264P01306	109
264P01508	119
264P01701	506
264P02001	116
264P02104	118
264P02301	506
264P02402	116
264P02501	135A
264P02502	5072A
264P03001	116

To Be Replaced	ECG Replacement
264P03301	5070A
264P03302	5074A
264P03303	142A
264P03401	112
264P03601	506
264P03603	506
264P03605	506
264P03607	116
264P03703	156
264P03802	109
264P04003	145A
264P04005	136A
264P04108	174
264P04109	174
264P04206	504
264P04301	116
264P04303	125
264P04402	116
264P04501	177
264P04502	178MP
264P04507	519
264P04701	506
264P04702	116
264P04703	116
264P04705	506
264P04801	116
264P04901	116
264P05001	116
264P05002	116
264P05502	611
264P06301	102A
264P06601	116
264P06603	506
264P06606	116
264P07501	613
264P08002	116
264P08801	116
264P08901	502
264P08902	503
264P09001	125
264P09101	506
264P09301	142A
264P09501	506
264P09703	140A
264P09707	5067A
264P09801	116
264P10102	506
264P10103	116
264P10105	116
264P10201	116
264P10308	145A
264P10502	142A
264P10502(Zener)	5074A
264P10906	5075A
264P11001	136A
264P11003	138A
264P11007	143A
264P11009	147A
264P13002	506
264P14002	503
264P14701	125
264P17401	5071A
264P17402	143A
264Z00201	116
264Z00701	109
265D00702	177
265P03301	601
265Z00101	177
266P001-01	704
266P001-02	704
266P00101	704
266P00102	704
266P00301	1096
266P00602	1099
266P00801	1096
266P01002	1096
266P6034	1183
266P10101	749
266P10103	749
266P10201	747
266P10202	747
266P30102	712
266P30103	712
266P30109	712
266P30201	1075A
266P30402	1003
266P30601	1029
266P30706	1103
266P60304	1183
266P60502	738
266P71301	719
269M01201	519
269P19009	162
269V004-H01	113
270-950-030	123A
270-950-037-02	128
274	729
276-053	3057
276-2042	249
276A01	704
279-1(SYL)	103A
280-0001	1100
280-0002	801
280-07	5547
281	123A
282-1(SYL)	124
284HC	123A
288-0550	1115A
288(Sears)	116
290-1003	177
290V034C01	125
290V02H69	108
291-04	116
291-20	116
292-10	116

To Be Replaced	ECG Replacement
294	159
294-42-9	109
295L001H01	116
295L001M01	116
295L001M02	116
295L002M03	117
295L003M01	116
295V002H01	116
295V003H01	118
295V003M01	118
295V005H02	116
295V005H03	109
295V006H01	116
295V006H02	116
295V006H03	116
295V006H05	116
295V006H06	117
295V006H07	116
295V006H08	117
295V006H09	116
295V007H02	116
295V008H01	116
295V012H01	116
295V012H02	116
295V012H03	116
295V012H06	116
295V014H01	116
295V014H04	116
295V015H02	116
295V016H01	116
295V017H01	116
295V020B01	116
295V020H01	116
295V023H01	116
295V027C01	116
295V027C01-1	116
295V028C01	116
295V028C02	116
295V028C03	116
295V028C04	125
295V029C01	116
295V029C02	116
295V031B	119
295V031B02	120
295V031C02	120
295V033B01	118
295V034C01	119
295V035C01	116
295V041H04	121
296	172A
296-18-9	102A
296-19-9	102A
296-42-9	109
296-46-9	160
296-50-9	123A
296-51-9	123A
296-55-9	199
296-56-9	123A
296-58-9	128
296-59-9	123A
296-60-9	102A
296-61-9	131
296-62-9	102A
296-64-9-1	158
296-77-9	123A
296-81-9	128
296-86	229
296-98-9	123A
296L002B01	519
296L003B01	142A
296(Regency)	152
296(SEARS)	172A
296V001H01	358
296V001M01	358
296V002H01	109
296V002H02	109
296V002H05	109
296V002H06	109
296V002H07	109
296V002H08	109
296V002M01	109
296V004H01	113
296V006H02	109
296V006H03	116
296V007H02	109
296V011H03	143A
296V012H01	109
296V015B01	109
296V015H01	109
296V017H01	142A
296V018B01	142A
296V019B04	141A
296V020B01	177
296V020B02	116
296V023C	358B
296V024B02	177
296V034C01	119
297L001H01	103A
297L001H02	103A
297L001H03	102A(2)
297L001M01	103A
297L001M02	102A
297L001M03	102A(2)
297L002H01	102A
297L005H01	102A
297L006H01	123A
297L006H02	123A
297L007C	199
297L007C02	123A
297L007C03	199
297L007H01	123A
297L007H02	123A
297L007H03	123A(2)
297L008C02	128(2)
297L008H01	128(2)

To Be Replaced	ECG Replacement
297L010C	234
297L010C01	234
297L011C01	107
297L012C01	159
297L012C-01	106
297L013B01	123A
297L013B02	159
297L015C01	199
297V002H03	103A
297V002H04	103A
297V002H05	103A
297V002M04	103A
297V002M05	103A
297V003H02	102A(2)
297V003H03	102
297V003H06	102A(2)
297V003H08	102A(2)
297V003H09	102A
297V003M01	102
297V003M07	102
297V004H01	102A
297V004H03	102A
297V004H04	102A
297V004H06	102A
297V004H08	102A
297V004H09	102A
297V004H10	102
297V004H11	102A
297V004H14	102
297V004H15	102
297V004H16	102
297V004M01	102
297V005H01	102A
297V008H01	100
297V008M01	160
297V010H01	102A(2)
297V010M01	102A(2)
297V011H01	126
297V011H02	100
297V012H01	126
297V012H02	100
297V012H03	100
297V012H04	160
297V012H05	100
297V012H06	100
297V012H07	160
297V012H08	100
297V012H09	100
297V012H10	126
297V012H11	160
297V012H12	160
297V012H13	160
297V012H14	102
297V012H15	126
297V017H01	100
297V017H02	100
297V018H01	102A
297V019B01	100
297V019B04	141A
297V019H01	100
297V020H01	160
297V020H02	100
297V020M01	100
297V021H01	100
297V021H02	100
297V021H03	100
297V022H01	100
297V024H01	160
297V024H03	160
297V025H02	102
297V025H03	102A(2)
297V025H04	102
297V025H05	102
297V025H15	102
297V026H01	126
297V026H03	100
297V027C01	116
297V027H01	102
297V032H01	102
297V033H01	102
297V034H01	126
297V035H01	126
297V036H01	126
297V036H02	126
297V037B02	102A
297V037H01	102
297V037H02	102
297V038H01	100
297V038H02	160
297V038H03	160
297V038H04	160
297V038H05	100
297V038H06	126
297V038H07	102
297V038H09	100
297V038H10	126
297V038H11	126
297V038H12	126
297V040H01	102
297V040H08	102
297V040H10	102
297V040H11	102
297V040H12	102
297V040H13	102
297V040H15	121
297V040H16	102
297V041H01	121MP
297V041H02	121
297V041H03	121
297V041H04	121
297V041H05	104
297V041H06	121
297V041H07	104
297V042C01	102
297V042C02	102

To Be Replaced	ECG Replacement
297V042C03	102
297V042C04	102
297V042H01	102
297V042H02	102
297V042H03	126
297V042H04	126
297V043H01	102
297V043H02	100
297V044H01	100
297V045H01	126
297V045H02	126
297V049H01	123
297V049H03	123
297V049H04	123
297V049H05	123A
297V049H06	128
297V050C02	102A
297V050H01	120
297V050H02	120
297V050H03	102
297V051C03	102
297V051C04	102
297V051H01	102
297V051H02	102
297V051H03	102
297V051H04	102A
297V052C01	102
297V052H01	102A
297V052H02	102
297V052H04	102A
297V053C01	102
297V053H01	102A
297V053H02	102A
297V054C01	100
297V054C02	100
297V054H01	126
297V054H02	126
297V055C01	100
297V055H01	126
297V057H01	158(2)
297V057H02	158
297V059H01	123
297V059H02	123
297V059H03	123
297V060H01	124
297V060H02	124
297V060H03	124
297V061C01	130
297V061C01A	130
297V061C02	130
297V061C02A	130
297V061C03	123
297V061C04	123
297V061C05	128
297V061C06	123
297V061C07	120A
297V061H01	123A
297V061H02	123A
297V061H03	123A
297V062C01	121
297V062C05	121
297V062C06	128
297V063C01	126
297V064H01	160
297V065C01	126
297V065C02	126
297V065C03	126
297V065H01	100
297V065H02	100
297V065H03	100
297V070C01	126
297V070H49	108
297V071C03	124
297V071H03	124
297V072C01	108
297V072C03	108
297V072C04	108
297V072C05	128
297V072C06	123A
297V073C01	129
297V073C02	129
297V073C03	159
297V073C04	159
297V074C01	161
297V074C02	123
297V074C03	123
297V074C04	123
297V074C06	123A
297V074C07	123A
297V074C08	123A
297V074C09	108
297V074C10	128
297V074C11	129
297V074C12	128
297V076B01	102
297V076C01	102
297V077C01	126
297V078C01	108
297V078C02	108
297V080C01	129
297V081C01	102A
297V082B01	128
297V082B02	129
297V082B03	129
297V083C01	159
297V083C02	123A
297V083C03	129
297V083C04	128
297V084C01	157
297V085C01	123A
297V085C02	123A
297V085C03	123A
297V085C04	123A
297V086C01	159
297V086C02	123A

To Be Replaced	ECG Replacement
297V086C03	123A
297V086C04	185
297V087B02	188
299 Power	105
300	102
300-0003-002	177
300-0003-003	177
300C043	128
300E	6058
300R1B	5801
300R2B	5802
300R3B	5803
300R5B	5805
300R7B	5808
300R8B	5808
300U5A	6354
300U5AR	6355
300U10A	6354
300U10AR	6355
300U15A	6354
300U15AR	6355
300U20A	6354
300U20AR	6355
300U25A	6354
300U25AR	6355
300U30A	6354
300U30AR	6355
300U40A	6354
300U40AR	6355
300U50A	6356
300U50AR	6357
300U60A	6356
300U60AR	6357
300U70A	6358
300U70AR	6359
300U80A	6358
300U80AR	6359
300U90A	6358
300U90AR	6359
300U100A	6358
300U100AR	6359
301	102
301-1	120
301-576-03	708
301-576-2	9158
301-576-3	708
301-576-4	7400
301-576-6	128
301-576-14	740A
301-679-1	817
301-680-1	753
301-695-1	128
301-696-8	341
302	102
302-100	5640
302-200	5641
302-400	5642
302-488-1	1115A
302-500	5643
302-600	5643
302-679-1	299
302-680	299
302A	5980
302B	5982
302C	5986
302D	5986
302E	5988
302F	5988
302G	5990
302H	5990
302K	5992
302M	5994
302P	5998
302S	5998
302V	6002
302Z	6002
303-2	129
303A	5980
303B	5982
303C	5986
303D	5986
303E	5988
303F	5988
303G	5990
303H	5990
303K	5992
303M	5994
303P	5998
303S	5998
303V	6002
303Z	6002
304-1(SYL)	102A
304A	5870
304B	5872
304C	5874
304D	5874
304F	5876
304H	5878
304K	5880
304M	5882
304P	5886
304S	5886
304V	5890
304Z	5890
305-047-9-002	724
305A	5830
305B	5832
305C	5834
305D	5834
305F	5836
305H	5838
305K	5840
305M	5842
305P	5846
305S	5846

To Be Replaced	ECG Replacement
305V	5848
305Z	5848
306-1	123A
306-5	123A
307-001-9-001	703A
307-005-9-001	1003
307-007-9-001	1100
307-007-9-002	1102
307-008-9-001	724
307-009-9-002	1102
307-020-9-001	1100
307-029-1-001	1100
307-047-9-002	724
307-095-9-002	4011B
307-095-9-003	977
307-095-9-004	1198
307-107-9-001	1235
307-107-9-003(Audio)	1155
307-107-9-003(P.L.L.)	1208
307-107-9-005	1197
307-107-9-006	1207
307-112-9-001	1194
307-112-9-002	977
307-112-9-003	977
307-112-9-005	973
307-112-9-007	1082
307-113-9-001	4011B
307-113-9-002	1203
307-113-9-003	977
307-113-9-004	1195
307-115-9-001	1082
307-120-9-002	801
307-131-9-001	1203
307-131-9-002	1261
307-131-9-003	1260
307-131-9-006	1226
307-133-9-004	1192
307-143-9-001	1262
307-143-9-002	1249
307-143-9-003	1192
307-152-9-007	74LS00
307-152-9-009	74LS93
307-152-9-012	4011B
307-200	5673
307-400	5675
307-600	5677
307-1209-001	1240
307A	116
307B	116
307C	116
307D	116
307F	116
307H	116
307K	116
307M	116
309-5(SYL)	123A
309-324-613	118
309-324-616	109
309-327-601	138A
309-327-608	138A
309-327-802	138A
309-327-803	125
309-327-910	116
309-327-916	109
309-327-926	123A
309-327-927	116
309-327-931	102A
309-327-932	116
309(Catalina)	159
310	116
310-068	126
310-4	116
310-68	126
310-123	126
310-124	126
310-139	126
310-187	123
310-188	102
310-189	100
310-190	126
310-191	126
310-192	121
310-200	5673
310-400	5675
310-600	5677
310-8028-001	5527
311-0126-001	519
311-0139-001	177
311D589-P2	159
311D883-P01	177
311D916P01	199
311Z4	141A
312-1(SYL)	199
314-1(SYL)	241
314-6005-1	184
314-6006	175
314-6007-1	123A
314-6007-2	123A
314-6007-3	123A
316-0227-001	910
317-0083-001	159
317-0139-001	129
317-2627-1	9946
317-8504-001	123A
318-2	297
319-0(SYL)	5074A
319-500(SYL)	5074A
319C	123A
320-1	130
320A	116
320B	116
320C	116
320D	116
320F	116
320H	116

To Be Replaced	ECG Replacement
320K	116
320M	116
320P	125
320S	125
320Z	125
321-1(SYL)	228A
321-264	154
322-0147	116
322-1	175
322(Catalina)	123A
322T1	102A
323-5(SYL)	289
323-6(SYL)	108
323-3075	163A
323-6055(LANDA)	165
323T1	102A
324	102A
324-0011	113
324-0012	358
324-0014	109
324-0015	120
324-0016	160
324-0026	160
324-0027	126
324-0028	126
324-0029	102A
324-0030	158
324-0035	109
324-0037	109
324-0038	126
324-0041	102
324-0049	109
324-0055	102
324-0056	158
324-0057	109
324-0062	158
324-0074	102A
324-0077	160
324-0079	126
324-0080	158
324-0082	160
324-0083	160
324-0085	158
324-0086	160
324-0087	160
324-0088	102
324-0089	102A
324-0090	100
324-0091	102A
324-0092	102A
324-0093	102A
324-0093 (Philco)	109
324-0095	160
324-0097	158
324-0098	126
324-0099	126
324-019	128
324-0100	102A
324-0102	117
324-0105	109
324-0106	126
324-0107	110
324-0107-01	109
324-0108	109
324-0110	160
324-0111	160
324-0112	160
324-0114	112
324-0115	179
324-0116	127
324-0117	116
324-0118	5896
324-0119	116
324-0120	116
324-0121	126
324-0122	103A
324-0123	160
324-0124	158
324-0125	158
324-0126	131
324-0128	127
324-0129	126
324-0130	126
324-0131	160
324-0132	160
324-0133	102
324-0134	103
324-0135	116
324-0136	126
324-0137	126
324-0138	126
324-0139	102
324-0140	102
324-0141	109
324-0142	102
324-0143	102
324-0144	102
324-0145	126
324-0146	102
324-0147	116
324-0149	108
324-0150	108
324-0151	123
324-0152	123
324-0154	123
324-0160	109
324-0162	116
324-0187	160
324-1	108
324-1(SYL)	265
324-6(SYL)	123A
324-132	160
324-144	102
324-6005-5	123A
324-6011	128

To Be Replaced	ECG Replacement
324-6013	128
324C	987
324T1	102A
324T2	102A
325-0025-327	109
325-0025-329	102A
325-0025-330	102A
325-0025-331	102A
325-0028-79	102A
325-0028-80	102A
325-0028-81	102A
325-0028-83	102A
325-0028-84	108
325-0028-85	160
325-0028-86	109
325-0028-87	109
325-0028-89	116
325-0030-315	102A
325-0030-317	102A
325-0030-318	102A
325-0030-319	102A
325-0031-303	123A
325-0031-304	123
325-0031-305	123
325-0031-306	158
325-0031-310	123A
325-0031-335	109
325-0031-338	116
325-0036-536	102A
325-0036-562	109
325-0036-564	126
325-0036-565	126
325-0042-311	166
325-0042-351	123A
325-0047-516	102A
325-0047-517	116
325-0054-310	102A
325-0054-311	102A
325-0054-312	116
325-0076-306	123A
325-0076-307	123A
325-0076-308	123A
325-0076-315	116
325-0081-100	123A
325-0081-101	123A
325-0081-102	158
325-0081-109	167
325-0081-110	116
325-0135-B	116
325-0141-23	116
325-0500-12	199
325-0500-13	199
325-0574-30	123A
325-0574-31	123A
325-0670	102A
325-0670-1	102A
325-0670-7	102A
325-0670-16	116
325-0670A	102A
325-5	171
325-5(SYL)	159
325-1370-18	102A
325-1370-19	123A
325-1370-20	123A
325-1375-10	126
325-1375-11	126
325-1375-12	126
325-1376-53	102A
325-1376-54	126
325-1376-55	126
325-1376-56	102A
325-1376-57	102A
325-1376-58	102A
325-1376-60	109
325-1378-18	107
325-1378-19	107
325-1378-20	102A
325-1378-21	158
325-1378-22	102A
325-1441-10	116
325-1441-11	116
325-1442-8	102
325-1442-9	124
325-1446-26	123
325-1446-27	123
325-1446-28	123
325-1446-29	116
325-1513-29	123
325-1513-30	123
325-1513-46	128
325-1771-15	123A
325-1771-16	107
325-4610-100	125
325T1	102A
326-6(SYL)	299
326T1	102A
327-4(SYL)	192
329-5(SYL)	159
330-2	159
330-4	159
330-1304-8	108
331-1	196
332-2911	130
332-2912	181
332-3562	223
332-4009	177
334-377	162
335-1	165
335A	5981
335B	5983
335C	5987
335D	5987
335F	5989
335H	5991
335K	5993

To Be Replaced	ECG Replacement
335M	5995
335P	5999
335S	5999
335V	6003
335Z	6003
336-1(SYL)	185
336-2(SYL)	184
336-20(SYL)	184 & 185
336A	5981
336B	5983
336C	5987
336D	5987
336F	5989
336H	5991
336K	5993
336M	5995
336S	5999
336V	6003
336Z	6003
337A	5871
337B	5873
337C	5875
337D	5875
337F	5877
337H	5879
337K	5881
337M	5883
337P	5887
337S	5887
337V	5891
337Z	5891
338-1(SYL)	331
338-3(SYL)	199
338-4(SYL)	199
339-03-1270	4086B
339-1	159
339-1(SYL)	332
339-2(SYL)	199
339-3(SYL)	199
339-529-001	109
339-529-002	140A
341A	5850
341B	5852
341C	5854
341D	5854
341F	5856
341H	5856
341K	5860
341M	5862
341P	5866
341S	5866
341V	5868
341Z	5868
342-1	128
342-1(SYL)	327
342-2(SYL)	199
343-1(SYL)	124
343-1(SYL)	285
344-1	128
344-1(SYL)	373
344-2	128
344-6000-2	123A
344-6000-3	108
344-6000-3A	108
344-6000-4	123A
344-6000-5	123A
344-6000-5A	123A
344-6001-1	128
344-6001-2	128
344-6002-3	123A
344-6005-1	123A
344-6005-2	123A
344-6005-5	123A
344-6005-6	177
344-6006-6	109
344-6011-1	128
344-6011-2	128
344-6012-1	129
344-6012-3	129
344-6013-1B	128
344-6013-4	128
344-6014-1B	129
344-6015-7	108
344-6015-7A	108
344-6015-8	107
344-6015-9	107
344-6015-10	108
344-6015-11	108
344-6017-1	159
344-6017-2	123A
344-6017-3	123A
344-6017-4	128
344-6017-5	123A
344-6017-6	108
345-1(SYL)	374
345-2	128
346A	5851
346B	5853
346C	5855
346D	5855
346F	5857
346H	5857
346K	5861
346M	5863
346P	5867
346S	5867
346V	5869
346Z	5869
349-0002-001	519
349-0002-002	519
349-1	128
349-2	128
349-113-011	9930
349-113-012	9932
349-113-013	9945
349-113-014	9946
349-113-015	9951
349-113-022	9945
349-113-024	9950
349-113-025	9941
349-212-003	909
350	100
350-1(SYL)	123A
351-2(SYL)	159
351-1008-010	716
351-1011-022	724
351-1011-032	724
351-1017-010	703A
351-1027-010	716
351-1029-020	941
351-1035	923
351-1035-020	923
351-1041-010	912
351-1042-020	910
351-3006	9914
351-3031	177
351-7008-010	9910
351-7008-020	9913
351-7011-020	9900
351-7011-030	9903
351-7011-040	9903
351-7011-050	9905
351-7011-060	9905
351-7011-070	9910
351-7011-080	9910
351-7011-090	9911
351-7011-100	9914
351-7011-110	9914
351-7011-120	9914
351-7011-150	9921
351-7011-160	9921
351-7011-170	9923
351-7011-180	9923
351-7015-010	9908
351-7015-020	9909
351-7015-030	9910
351-7015-040	9911
351-7015-050	9912
351-7015-060	9913
351-7015-070	9921
351-7025-010	9907
351-7025-020	9914
351-7026-010	9908
351-7026-030	9910
351-7026-060	9913
351-7026-070	9921
351-7121-010	9923
351-7121-020	9914
351-7140-010	909
351-7189-010	910
351-7206-080	9908
351-7206-090	9909
351-7206-100	9910
351-7206-110	9911
351-7206-140	9921
351-7206-150	9908
351-7206-160	9909
351-7206-170	9910
351-7206-180	9911
351-7206-190	9912
351-7206-200	9913
351-7206-210	9921
351-7577-010	9109
352-0023-001	9932
352-0092-020	128
352-043-010	128
352-0195-000	123A
352-0197-000	123A
352-0206-001	123A
352-0219-000	159
352-0316-00	123A
352-0318-00	123A
352-0318-001	123A
352-0319-000	123A
352-0322-010	123A
352-0349-000	123A
352-0364-000	128
352-0364-010	128
352-0365-000	123A
352-0400-00	123A
352-0400-010	123A
352-0400-030	123A
352-0403-010	154
352-0433-00	123A
352-0477-00	123A
352-0479-010	128
352-0506-000	123A
352-0519-00	123A
352-0546-00	123A
352-0549-000	199
352-0551-010	159
352-0551-021	159
352-0569-00	123A
352-0569-010	123A
352-0569-020	123A
352-0579-00	123A
352-0579-010	123A
352-0579-020	123A
352-0581-011	175
352-0581-020	175
352-0581-021	175
352-0581-030	175
352-0581-031	175
352-0583-011	130
352-0596-010	123A
352-0596-020	123A
352-0596-030	123A
352-0606-011	175
352-0610-030	159
352-0610-040	159
352-0629-010	123A
352-0630	107
352-0630-010	107
352-0636-010	159
352-0636-020	159
352-0638	199
352-0653-010	107
352-0653-020	107
352-0658-010	161
352-0658-020	161
352-0658-030	161
352-0658-040	161
352-0658-050	161
352-0661-010	123A
352-0661-020	123A
352-0667-010	123A
352-0675-010	123A
352-0675-020	123A
352-0675-030	123A
352-0675-040	123A
352-0675-050	123A
352-0677-010	130
352-0677-011	130
352-0677-020	130
352-0677-021	130
352-0677-030	130
352-0677-031	130
352-0677-041	130
352-0677-051	130
352-0677-40	130
352-0680-010	123A
352-0680-020	123A
352-0711-021	124
352-0713-030	123A
352-0749-010	223
352-0754-020	159
352-0766-010	128
352-0773-010	234
352-0773-020	234
352-0773-030	234
352-0778-010	159
352-0783-020	128
352-0809	123A
352-0816-010	128
352-0848-020	159
352-0950-010	106
352-0950-020	106
352-0959-010	159
352-0959-020	159
352-0959-030	159
352-5	171
352-7500-010	123A
352-7500-450	123A
352-7500-861	124
352-8000-010	123A
352-8000-020	123A
352-8000-030	123A
352-8000-040	123A
352-9014-00	128
352-9036-00	123A
352-9079-00	123A
352-9094-00	194
352-9103-000	123A
352(Transistor)	102
353-2575-00	177
353-2655-000	177
353-3024-000	519
353-3083-000	177
353-3273-00	177
353-3289-000	519
353-3338-000	519
353-3339-000	177
353-3627-010	519
353-3627-020	519
353-3663-010	519
353-3687-010	519
353-3687-020	519
353-9001-001	126
353-9001-002	126
353-9001-003	126
353-9002-002	126
353-9008-001	129
353-9012-001	102A
353-9201-001	121MP
353-9203-001	152
353-9301-001	128
353-9301-002	160
353-9301-004	129
353-9304-001	159
353-9304-004	129
353-9306-001	123A
353-9306-002	123A
353-9306-003	123A
353-9306-004	123A
353-9306-005	123A
353-9306-006	199
353-9306-007	199
353-9310-001	123A
353-9312-001	102A
353-9314-001	123A
353-9315-001	123A
353-9317-001	129
353-9318-001	199
353-9318-002	199
353-9319-001	123A
353-9319-002	123A
353-9502-001	152
353(Chrysler)	734
353(IC)	736
353(Transistor)	102
354-3052	102
354-3127-1	123A
354-9001-001	110
354-9101-002	110
354-9101-006	116
354-9102-001	116
354-9110-001	116
354(Chrysler)	723
355D6	161
355D7	222
355D8	161
355D9	123A
356-2	130
357A-8	351
357A-10	349
357A-23	351
358-1	152
359-1	153
359-1(SYL)	124
359-3(SYL)	124
359A	116
359B	116
359C	116
359D	116
359F	116
359H	116
359K	116
359M	116
359P	125
359S	125
359V	125
359Z	125
360-1(RCA)	128
360-32	177
361-1	186
361-1(10)	171
362-3	171
362-4	171
362A10	192
363-1A(SYL)	123A
363-1(SYL)	123A
364-1	159
364-1(Sylvania)	159
364-6004	184
364-10048	133
364-B12	5547
364B14	5496
365-1	123A
365-1(SYL)	199
365T1	100
366-1(Sylvania)	108
366-2(SYL)	108
366-2(Sylvania)	108
366A	5850
366B	5852
366C	5854
366D	5854
366F	5856
366H	5858
366K	5860
366M	5862
366P	5999
366RA	5851
366RB	5853
366RC	5855
366RD	5855
366RF	5857
366RH	5859
366RK	5861
366RM	5863
366RP	5867
366RS	5867
366RV	5869
366RZ	5869
366S	5866
366V	5868
366Z	5868
367-1(SYL)	159
367-3	159
367-3(SYL)	159
367-30(SYL)	234
367A	5870
367B	5872
367C	5874
367D	5874
367F	5876
367H	5878
367K	5880
367M	5882
367P	5886
367RA	5871
367RB	5873
367RC	5875
367RD	5875
367RF	5877
367RH	5879
367RK	5881
367RM	5883
367RP	5887
367RS	5887
367RV	5891
367RZ	5891
367S	5886
367(Sears)	160
367V	5890
367Z	5890
368-1(SYL)	5802
368A	5892
368B	5894
368C	5896
368D	5896
368F	5898
368H	5900
368K	5902
368M	5904
368P	5908
368RA	5893
368RB	5895
368RC	5897
368RD	5897
368RF	5899
368RH	5901
368RK	5903
368RM	5905
368RP	5909
368RS	5909
368RV	5911
368RZ	5911
368S	5908
368V	5910
368Z	5910
369-1(SYL)	106
369-2	116
369-3	116
370-1	165
370-116764	923
371-1(SYL)	128
371A	5980
371B	5982
371C	5986
371D	5986
371F	5988
371H	5990
371K	5992
371M	5994
371P	5998
371RA	5981
371RB	5983
371RC	5987
371RD	5987
371RF	5989
371RH	5991
371RK	5993
371RM	5995
371RP	5999
371RS	5999
371RV	6003
371RZ	6003
371S	5998
371V	6002
371Z	6002
372-1	128
372-1(SYL)	190
372-2(SYL)	186
372-3	186
373-1(SYL)	189
373-2(SYL)	187
373-3	187
374-1(SYL)	181
375-1(SYL)	132
375-2(SYL)	312
375-1005	123A
376-0062	9800
376-0099	7441
376-1(SYL)	116
377-1(SYL)	131
377-2(SYL)	155
378-1(SYL)	132
378-2(SYL)	312
378-3(SYL)	312
378-44	130
378-44A	130
380-0057-000	124
380-0171-000	129
380-1000	519
380-1001	519
380H61	116
380K62	116
380M63	116
381-1(SYL)	199
381-2(SYL)	199
382-1(SYL)	503
384A	116
384B	116
384C	116
384D	116
384F	116
384H	116
384K	125
384M	125
384P	125
384S	125
384V	125
384Z	125
385-1	128
385A	116
385B	116
385C	116
385D	116
385F	116
385H	116
385K	116
385KW	116
385M	116
385P	125
385S	125
385Z	125
386-1	159
386-1A(SYL)	159
386-1AY	116
386-1CY	116
386-1FY	116
386-1(SYL)	159
386-2A(SYL)	159
386-2(SYL)	159
386-3(SYL)	159
386-4(SYL)	159
386-40	130
386-1102-P1	123A
386-1102-P2	123A
386-1102-P3	123A
386-7118P1	108
386-7178-P001	199
386-7178P1	123A
386-7181P2	128
386-7182-P001	195A
386-7182P1	195A
386-7183P1	130
386-7183P1A	130
386-7184P1	129
386-7185P1	123A
386-7188P1	108
386-7243-P001	161
386-7254-P202	129
386-7270-P2	181
386-7316-P1	128
386-7316-P2	128
386AK	116
386AW	116
386AX	116
386AY	116
386BW	116
386BY	116
386CW	116
386CX	116
386CY	116
386DW	116
386DY	116
386FW	116
386FX	116
386FY	116
386K	116
386KX	116
386KY	116
386MW	116
386MY	116
388A	507
388B	506
391-1A(SYL)	159
391-1(SYL)	159
391-2A(SYL)	159
391-2(SYL)	159
392-1(MAG)	238
392-1(Sylvania)	128
392-2(SYL)	192
392-3(SYL)	192
392-3(SYL)	194
392-5(SYL)	192
393-1A(SYL)	129
393-1(SYL)	129
393-2A(SYL)	129
393-2(SYL)	129
393-3(SYL)	193
394-1(SYL)	128
394-2(SYL)	128
394-3(SYL)	128
394-4A(SYL)	129
394-4(SYL)	129
394-5A(SYL)	129
394-5(SYL)	129
394-6(SYL)	129
394-40-0951	125
394-1571-1	519
394-1592-1	177
394-1602-1	177
394-3003-1	123A
394-3003-3	123A
394-3003-7	123A
394-3003-9	123A
394-3005-2	128
394-3074-2	102
394-3074-5	102
394-3097-1	102
394-3097-2	102
394-3102-1	101
394-3127-1	128
394-3127-2	128
394-3127-3	128
394-3127-4	130
394-3135	135A
394-3135A	130
394-3137-1	198
394-3141-1	128
394-3145	159
396-1(SYL)	223
396-7178P1	108
397N2	152
397P1	153
398-8418-1	9904
398-8972-1	7460
398-13222-1	923D
398-13223-1	7400
398-13224-1	7404
398-13225-1	7405
398-13226-1	7401
398-13227	941M
398-13632-1	7404
398B	5801
399A	5800
399B	5802
399C	5802
399D	5802
400-1362-101	128
400-1362-102	128
400-1362-201	128
400-1371-101	123A
400-1417-101	519
400-1569-101	199
400-1596	177
400-1735	9915
400-1736	9926
400-2023-101	123A
400-2023-201	123A
400A	109
400C-11958	116
400D	109
400(Quasar)	506
402-004-02	519
402A	5980
402B	5982
402C	5986
402D	5986
402F	5988
402H	5990
402K	5992
402M	5994
402P	5998
402S	5998
402V	6002
402Z	6002
403-009/07	130
403-1	109
403A	5980
403B	5982
403C	5986
403D	5986
403F	5988
403H	5990
403K	5992
403M	5994
403P	5998
403S	5998
403V	6002
403Z	6002
404-1(SYL)	123AP
404-2(SYL)	123A
404A	5870
404B	5872
404B(NCR)	129
404C	5874
404D	5874
404F	5876
404H	5878
404K	5880
404M	5882
404P	5886
404S	5886
404V	5890
404Z	5890
405A	5940
405B	5944
405C	5944
405D	5944
407A	5850
407B	5852
407C	5854
407D	5854
407F	5856
407H	5858
407K	5860
407M	5862
407P	5866
407RA	5851
407RB	5853
407RC	5855
407RD	5855
407RF	5857
407RH	5859
407RK	5861
407RM	5863
407RP	5867
407RS	5867
407RV	5869
407RZ	5869
407S	5866
407V	5868
407Z	5868
408A	5870
408B	5872
408C	5874
408D	5874
408F	5876
408H	5876
408K	5880
408M	5882
408P	5886
408RA	5871
408RB	5873
408RC	5875
408RD	5875
408RF	5877
408RH	5877
408RK	5881
408RM	5883
408RP	5887
408RS	5887
408RV	5891
408RZ	5891
408S	5886
408V	5890
408Z	5890
409A	5892
409B	5894
409C	5896
409D	5896
409F	5898
409H	5900
409K	5902
409M	5904
409P	5908
409RA	5893
409RB	5895
409RC	5897
409RD	5897

To Be Replaced	ECG Replacement
409RF	5899
409RH	5901
409RK	5903
409RM	5905
409RP	5909
409RS	5909
409RV	5911
409RZ	5911
409S	5908
409V	5910
409Z	5910
410	283
410-012-0150	102A
410-013-0240	102A
411	283
411-237	128
412	100
412-1A5	123A
412Z4	141A
412(Zener)	5072A
413	283
413(Concert Hall)	177
413(E.F.Johnson)	241
413(Truetone)	177
414A-15	121
416A	6050
416B	6050
416C	6054
416D	6054
416F	6058
416H	6060
416K	6064
416M	6064
416P	6068
416RA	6051
416RB	6051
416RC	6055
416RD	6055
416RF	6059
416RH	6061
416RK	6065
416RM	6065
416RP	6069
416RS	6069
416RV	6073
416RZ	6073
416S	6068
416V	6072
416Z	6072
417-2	160
417-4-00226	196
417-5	102A
417-6	158
417-7	123A
417-11	160
417-12	160
417-13	160
417-14	160
417-16	160
417-17	102A
417-18	158
417-19	107
417-20	121
417-21	158
417-22	160
417-23	160
417-25	160
417-26	160
417-27	160
417-28	158
417-29	179
417-29BLK	179
417-29GRN	179
417-29WHT	179
417-30	121
417-31	160
417-32	121
417-33	160
417-35	160
417-36	160
417-37	160
417-38	160
417-39	160
417-40	102A
417-41	102A
417-42	179
417-43	129
417-44	121
417-45	121
417-46	121
417-47	102A
417-48	102A
417-49	128
417-50	160
417-51	158
417-52	102A
417-53	160
417-54	160
417-56	160
417-57	160
417-58	160
417-59	128
417-60	160
417-62	104
417-66	160
417-67	123A
417-68	160
417-69	123A
417-70	160
417-71	160
417-72	160
417-73	102A
417-74	102A
417-75	102A
417-76	160

To Be Replaced	ECG Replacement
417-77	123A
417-78	102A
417-79	160
417-81	6400
417-83	108
417-87	128
417-88	128
417-89	128
417-90	121
417-91	123A
417-92	123A
417-93	123A
417-93-12903	123A
417-94	123A
417-99	121
417-100	128
417-101	162
417-102	106
417-103	102A
417-104	175
417-105	123A
417-106	123A
417-108	123A
417-108-13163	199
417-109	123AP
417-109-13163	123A
417-109(Heath)	123AP
417-110	123A
417-110-13163	123A
417-111	129
417-112	127
417-113	179
417-114	128
417-114-13163	123A
417-115	154
417-115-13173	128
417-116	159
417-116-13165	159
417-118	123A
417-119	704
417-120	179
417-121	103A
417-122	102A
417-123	726
417-124	108
417-125	108
417-125-12903	107
417-126	123AP
417-126-12903	199
417-126(Heath)	123A
417-127	123
417-128	128
417-129	123A
417-132	159
417-133	128
417-134	123A
417-134-13271	123A
417-135	123A
417-136	128
417-137	128
417-138	129
417-139	130
417-139-13286	181
417-139A	130
417-140	133
417-141	121
417-142	179
417-143	160
417-144	184
417-145	185
417-146	158
417-147	158
417-148	158
417-149	158
417-150	158
417-151	158
417-152	158
417-153	159
417-153-13431	234
417-154	107
417-155	128
417-155-13163	123A
417-158	162
417-159	157
417-160	131
417-161	172A
417-162	130
417-168	159
417-169	133
417-170	129
417-171	123AP
417-171-13163	123A
417-171(Heath)	123AP
417-172	123A
417-172-13271	123A
417-175	196
417-175-12993	152
417-176	159
417-177	105
417-178	128
417-180	128
417-181	129
417-182	159
417-183	6400
417-184	159
417-185	123A
417-187	6400
417-190	107
417-192	123A
417-193	128
417-194	133
417-195	157
417-196	159
417-196-13262	234
417-197	123A

To Be Replaced	ECG Replacement
417-199	175
417-200	159
417-201	159
417-202	711
417-203	196
417-204	162
417-205	107
417-206	220
417-207	220
417-211	132
417-212	130
417-212A	130
417-213	123A
417-214	181
417-214-13286	181
417-215	130
417-215-13286	130
417-215A	130
417-216	121
417-217	123A
417-222	172A
417-224	128
417-225	185
417-226-1	123A
417-226-13163	199
417-227	157
417-228	123A
417-229	123A
417-231	133
417-232	198
417-232(Heath)	154
417-233	128
417-233-13163	123A
417-234	129
417-234-13165	159
417-235	159
417-235-13262	159
417-235(Heath)	159
417-237	128
417-237-13163	128
417-238	124
417-239	163A
417-241	326
417-242-8181	159
417-243	161
417-244	123A
417-244-12903	199
417-245	171
417-246	133
417-247	128
417-248	163A
417-250	128
417-252	133
417-253	133
417-254	181
417-255	129
417-257	128
417-258	161
417-260	129
417-260-50127	159
417-262	161
417-272	265
417-273	130
417-273-13286	130
417-283-13271	199
417-289	197
417-291	133
417-294	287
417-801	123AP
417-801-12903	123A
417-811	194
417-815	188
417-816	196
417-817	197
417-821	128
417-821-13163	128
417-822-13262	129
417-822(Heath)	159
417-823	6402
417-823(P.U.T.)	6402
417-823(Transistor)	188
417-834	191
417-865	159
417A	5980
417B	5982
417C	5986
417D	5986
417F	5988
417H	5990
417K	5992
417M	5994
417P	5998
417RA	5981
417RB	5983
417RC	5987
417RD	5987
417RF	5989
417RH	5991
417RK	5993
417RM	5995
417RP	5999
417RS	5999
417RV	6003
417RZ	6003
417S	5998
417V	6002
417Z	6002
418A	5980
418B	5982
418C	5986
418D	5986
418F	5988
418H	5990
418K	5992
418M	5994

To Be Replaced	ECG Replacement
418P	5998
418RA	5981
418RB	5983
418RC	5987
418RD	5987
418RF	5989
418RH	5991
418RK	5993
418RM	5995
418RP	5999
418RS	5999
418RV	6003
418RZ	6003
418S	5998
418V	6002
418Z	6002
419A	5980
419B	5982
419C	5986
419D	5986
419F	5988
419H	5990
419K	5992
419M	5994
419P	5998
419RA	5981
419RB	5983
419RC	5987
419RD	5987
419RF	5989
419RH	5991
419RK	5993
419RM	5995
419RP	5999
419RS	5999
419RV	6003
419S	5998
419V	6002
420-2003-173	125
420-2005-000	113
420-2104-570	125
420-2106-270	505
420T1	102A
421-6	160
421-6B	160
421-7	160
421-7B	160
421-8	160
421-8B	160
421-9	102A
421-10	102A
421-11	102A
421-11B	102A
421-12	102A
421-12B	102A
421-13	102A
421-13B	102A
421-13C	102
421-14	102A
421-14B	102A
421-15	102A
421-15B	102A
421-16	126
421-17	126
421-18	124
421-19	102
421-20	126
421-20B	126
421-21	126
421-21B	126
421-22	126
421-22B	126
421-24	121
421-25	121
421-26	126
421-4027	116
421-6599	121
421-7143	102A
421-7443	116
421-7443A	116
421-7444	123A
421-8109	102A
421-8111	123A
421-8310	124
421-9644	123A
421-9670	123A
421-9671	102A
421-9682	100
421-9683	108
421-9792	160
421-9840	123A
421-9862	103A
421-9862A	102A
421-9863	102A
421-9863A	102A
421-9864	102A
421-9864A	102A
421-9865	116
421T1	102A
422-0222	102A
422-0738	123A
422-0739	129
422-0960	175
422-0961	130
422-1232	129
422-1233	128
422-1234	123A
422-1362	116
422-1401	108
422-1402	108
422-1403	126
422-1404	128
422-1405	129
422-1406	102A
422-1407	123A

To Be Replaced	ECG Replacement
422-1408	125
422-1443	121MP
422-1866	116
422-2008	129
422-2158	128
422-2532	108
422-2533	123A
422-2534	123A
422-2535	102A
422-2540	116
422-2778	160
422-2779	160
422-2780	160
423-800-235	9933
423-800175	9932
423-800176	9962
423-800177	9932
423-800178	9946
423-800194	9949
423-800202	9936
423-800223	9097
423-800234	9930
423-800236	9093
424-1(SYL)	319
424-9001	175
429-0092-1	160
429-0092-2	102A
429-0092-3	102A
429-0092-56	109
429-0093-69	126
429-0093-71	125
429-0094-39	126
429-0910-50	160
429-0910-51	102A
429-0910-52	102A
429-0910-53	110
429-0910-54	109
429-0958-41	166
429-0958-42	123A
429-0958-43	137A
429-0981-12	107
429-0985-12	107
429-0986-12	108
429-0989-68	116
429-10001-0A	5870
429-10002-0A	5874
429-10036-0A	519
429-10036-0B	519
429-10054-0A	519
429-20004-0B	177
430-31	116
430-85	158
430-86	123A
430-87	123A
430-1044-0A	123A
430-10034	123A
430-10034-06	123A
430-10047-0C	128
430-10053-0	123A
430-10053-0A	123A
430-20013-0B	159
430-20018-0A	159
430-20021	159
430-20023-0A	159
430-20026-0	159
430-22861	108
430-23190	181
430-23212	123A
430-23221	123A
430-23222	129
430-23223	128
430-23843	130
430-23844	128
430-25762	132
430-25763	108
430-25764	108
430-25765	108
430-25766	123A
430-25767	108
430-25834	131
430-203845	129
430CL	123A
430(ZENITH)	123A
431-26551A	722
432-1(SYL)	194
433-1(SYL)	123A
433CL	123A
433M852	129
433(ZENITH)	123A
434	199
435-21026-0A	7400
435-21027-0A	7402
435-21028-0A	7404
435-21029-0A	7408
435-21030-0A	7410
435-21033-0A	7420
435-21034-0A	7451
435-21035-0A	7486
435-23006-0A	7473
435-23007-0A	7474
435-40012	116
435A	5981
435B	5983
435C	5987
435D	5987
435F	5989
435H	5991
435K	5993
435M	5995
435P	6068
435S	6068
435V	6072
435Z	6072
436-403-001	123A

To Be Replaced	ECG Replacement
436-404-002	159
436-10010-0A	7492
436-10011-0A	7496
436A	5981
436B	5983
436C	5987
436D	5987
436F	5989
436H	5991
436K	5993
436M	5995
436P	5999
436S	5999
436V	6003
436Z	6003
437-1(SYL)	191
437A	5871
437B	5873
437C	5875
437D	5875
437F	5877
437H	5879
437K	5881
437M	5883
437P	5886
437S	5886
437V	5890
438-002/01	909D
438-002/02	909
438-002/12	778
439-054/00	4000
439-054/01	4001B
439-054/11	4011B
439-054/12	4012B
439-054/13	4013B
439-054/16	4016B
439-054/24	4024B
439-054/25	4025B
439-054/27	4027B
439-054/49	4049B
439-054/50	4050B
440-1(SYL)	284
440-2(SYL)	284
441-2(SYL)	285
441A	5850
441B	5852
441C	5854
441D	5854
441F	5856
441H	5858
441K	5860
441M	5862
441P	5866
441S	5866
441V	5868
441Z	5868
442-2(SYL)	331
442-4	785
442-5	780
442-7	909D
442-8	703A
442-9	720
442-10	705A
442-11	748
442-16	722
442-20	703A
442-20-14299	703A
442-21	778
442-28	708
442-30	309K
442-30-2897	309K
442-33	790
442-39	975
442-41	725
442-46	801
442-51	779-1
442-55	795
442-56	747
442-57	714
442-58	715
442-59	783
442-62	712
442-68	715
442-620	815
443-1	7400
443-1(SYL)	332
443-2	7420
443-2(SYL)	332
443-4	7472
443-5	7473
443-6	7474
443-7	7490
443-7-16088	7490
443-13	7475
443-16	7476
443-18	7404
443-22	74121
443-23	74122
443-27	9093
443-32	74121
443-35	7441
443-36	7447
443-43	74H102
443-44	7413
443-44-2854	7413
443-45	7408
443-46	7402
443-53	7442
443-54	7403
443-65	7427
443-66	74192
443-71	74H00
443-73	7416
443-77	7438
443-87	74145

To Be Replaced	ECG Replacement
443-89	7409
443-162	74193
443-612	74193
443-623	7411
443-623-51644	7411
443-623(Heath)	74154
443-625	74132
443-628	74196
443-640	7493A
443-642	7405
443-701	4049B
444-0012-PT2	160
444-012-P1	160
444(Sears)	123A
445-0023	130
445-0023-P1	130
445-0023-P3	130
445-0023-P4	130
445-0028-P1	5547
445-0028-P2	5547
445-0034-1	181
445-0300P3	5626
445-0303-001	5642
445-0303-002	5642
446A	5851
446B	5853
446C	5855
446D	5855
446F	5857
446F(W.E.)	5809
446H	5859
446K	5861
446M	5863
446P	5866
446S	5866
446V	5868
446Z	5868
447(ZENITH)	123A
448-002/03	941
448A662	128
449	184
450-1167-1	159
450-1167-2	123A
450-1261	123A
451C	987
451D	5944
452-0(SYL)	116
454A25	116
454A104	128
454-A2534-1	116
454-A2534-10	116
455-1	126
458-1(SYL)	116
460-1009	177
460-1013	116
461-1006	159
461-1014	129
461-1048	129
461-1055-01	159
461-2001	234
462-0119	123A
462-1000	123A
462-1007	128
462-1009-01	123A
462-1016	128
462-1019	128
462-1038-01	199
462-1059	198
462-1061	123A
462-1063	123A
462-1066-01	199
462-2002	123A
462-2004	199
463-0(SYL)	116
463-1(SYL)	165
463-2(SYL)	165
464-100-19	109
464-103-19	-109
464-106-19	109
464-110-19	110MP
464-111-19	109
464-113-19	109
464-119-19	110MP
464-280-19	117
464-285-15	116
464-285-19	117
464-311-19	140A
465-005-19	102A
465-032-19	160
465-036-19	102A
465-042-19	160
465-045-19	160
465-049-19	160
465-061-19	160
465-067-19	158
465-072-19	102A
465-073-19	102A
465-075-19	102A
465-080-19	102A
465-082-19	102A
465-086-19	160
465-1A5	160
465-2A5	103A
465-4A5	101
465-106-19	123A
465-108-19	158
465-115-19	102A
465-132-19	102A
465-137-19	131
465-146-19	160
465-163-19	102A
465-165-19	102A
465-166-19	131MP
465-181-19	107

To Be Replaced	ECG Replacement
465-191-15	102A
465-206-19	131
465-223-19	160
465-260-15	131&155(CP)
465A-15	160
465B-15	160
465C-15	121
466-1A5	102A
466-2A5	102A
466-3A5	102A
469-2(SYL)	152
469-199-19	5078A
469-646-3	128
471-009	726
471-010	116
471-1(Metal)(SYL)	128
471-1(Metal)	128/401
471-1(PLASTIC)	188
472-0309-001	128
472-0445-001	128
472-0491-001	123A
472-0946-001	130
472-0946-002	130
472-1(SYL)	198
472-1198-001	123A
473A31	121
473B5	102A
473B6-2	102
473B6-2A	102
473B6-4	102
473B6-5	102
473B6-7	102
474-004	116
474-025	116
474-3A5	100
474A410AXP001	124
474A410BEP2	152
474A410BW-2	152
475-018	5802
476A	123
477-0375-001	9932
477-0376-001	909
477-0376-002	909D
477-0377-001	9930
477-0379-001	9962
477-0380-001	9945
477-0381-001	9946
477-0404-002	910
477-0412-004	7473
477-0415-002	7450
477-0417-002	7453
477-0542-001	941
477A15	105
477B15	121MP
477C15	121MP
478C	5994
479-0547-001	519
479-0663-005	177
479-1006-002	5529
479-1012-001	519
479-1013-001	519
479-1013-002	519
479-1055-001	519
479-1066	5529
479-1163-001	519
479-1229-001	519
479-1248-001	519
480-9(SEARS)	131
481-1(SYL)	5802
481-2(SYL)	5800
481-3(SYL)	5802
481-201-A	128
481-201-B	128
481-34842	191
483-3141	123A
484A15	121
486-1551	123A
486-40235-G02	116
488-2(SEARS)	108
488B15	160
488C15	100
490-2(SEARS)	108
491-2(SEARS)	108
491A948	128
492-1A5	105
499-1	108
499(Chrysler)	152
499(ZENITH)	123A
500B10	125
500RS20	525
500S10	125
500S20	525
501-068	282
501-363-2	5802
501ES001M	108
501T1	160
503T1	160
503-T10192	156
503-T21271	109
503-T21472	109
504-067	1232
504-080-000	HiDiv-1
504T1	160
505-2(SYL)	297
505ES105	176
505T1	160
506-2(SYL)	288
506T1	160
507-0(SYL)	184
507T1	160
508-0(SYL)	185
508-1(SYL)	188
508-2(SYL)	188
508T1	160

To Be Replaced	ECG Replacement
509-1(SYL)	189
509-2(SYL)	189
509ES0258	176
509R	290
509(Sears)	123A
509Y	290
510-4(SYL)	287
510A90	109
510ED46	109
510IN60	109
510IS34	109
511-3	5531
511-515	123
511-519	123
511-898	116
512ES040P	176
512RED	123A
513-891	114
513ES045P	176
514-048	761
514-053	754
514-033338	123A
514-042791	519
514-044910	234
514-047830	152
514-054214	130
515	123
515-299	116
515-521	108
515-10408A-01	710
515-10408A01	710
515ORN	123A
516	123
516-2(SYL)	295
517-0021	116
517-0025	116
517-0031	116
517-0033	116
517-2(SYL)	152
517-518	123
518-2(SYL)	292
518-499	116
519-1(RCA)	123A
520-301	128
520T1	100
521-081	110MP
521-094	116
521-145	109
521-9189	3007
521-9217	3020
521T1	100
522-726	116
522-893	113
522-958	170
522(ZENITH)	107
523-0001-001	116
523-0001-002	116
523-0001-003	116
523-0001-004	116
523-0001-005	116
523-0001-006	116
523-0001-007	125
523-0001-008	125
523-0001-009	125
523-0001-010	125
523-0006-002	519
523-0007-001	519
523-0009-041	610
523-0009-049	614
523-006-002	519
523-0013-002	116
523-0013-201	519
523-0017-001	156
523-0501-002	116
523-0501-003	116
523-250-3-100	140A
523-1000-001	116
523-1000-067	109
523-1000-67	109
523-1000-294	109
523-1000-295	109
523-1000-326	604
523-1000-881	116
523-1000-882	116
523-1000-883	519
523-1002-326	109
523-1500-002	116
523-1500-067	109
523-1500-881	116
523-1500-883	519
523-2001-100	140A
523-2003-001	109
523-2003-0-1	109
523-2003-100	140A
523-2003-101	5096A
523-2003-110	5074A
523-2003-120	142A
523-2003-130	143A
523-2003-140	144A
523-2003-150	145A
523-2003-160	5075A
523-2003-170	5076A
523-2003-180	5077A
523-2003-190	5078A
523-2003-200	5079A
523-2003-220	5080A
523-2003-240	5081A
523-2003-250	5082A
523-2003-270	146A
523-2003-300	5084A
523-2003-330	147A
523-2003-339	5066A
523-2003-360	5085A
523-2003-369	134A
523-2003-390	5086A

To Be Replaced	ECG Replacement
523-2003-399	5067A
523-2003-430	5087A
523-2003-439	5068A
523-2003-450	5088A
523-2003-470	5088A
523-2003-479	5069A
523-2003-500	5089A
523-2003-510	5089A
523-2003-519	135A
523-2003-520	5089A
523-2003-560	5090A
523-2003-569	136A
523-2003-620	149A
523-2003-629	137A
523-2003-680	5092A
523-2003-689	5071A
523-2003-750	5093A
523-2003-759	138A
523-2003-820	150A
523-2003-829	5072A
523-2003-910	5095A
523-2003-919	139A
523-2004-100	5125A
523-2005-100	140A
523-2005-279	5063A
523-2005-369	134A
523-2005-759	138A
523-2005-829	5072A
523-2005-919	139A
523-2503-100	140A
523-2503-150	145A
523-2503-689	5071A
523-2503-919	139A
523-2509-100	140A
523-4001-001	156(4)
523-1000882	116
524-457	109
524WHT	123A
525-24	116
525-26	125(4)
525-212	125
525-498	116
525-877	109
525BF	5483
526-1(SYL)	188
526-376	116
527-062	113
527-1(SYL)	189
527-798	117
528-325	117
530-082-3	125
530-082-4	125
530-082-1003	117
530-086-1	116
530-088-1	116
530-088-2	117
530-088-3	125
530-088-1002	125
530-088-1003	125
530-088-1004	125
530-094-1	116
530-095-1	116
530-098-1	116
530-099-1	116
530-099-3	116
530-099-4	116
530-106-1	116
530-106-1001	125
530-109-1	116
530-111-1	116
530-111-1001	125
530-113-1	116
530-119-1	503
530-120-1	116
530-122-1	117
530-132-1	118
530-136-T	125
532-1(SYL)	182
532-341	116
532-341A	116
535A	107
535M	229
536-1(RCA)	161
536-2(RCA)	123A
536D	123A
536D9	123A
536F	123A
536F(JVC)	199
536FS	123A
536FU	123A
536G(Wards)	123A
536GT	199
536GU(Wards)	128
536J2F	116
537D	123A
537E	123A
537FS	108
537FV	123A
537FY	123A
537J2F	116
538J2F	116
539-1(SYL)	238
539J2F	116
540-008	116
540-010	125
540-013	144A
540-014	116
540-015	5802
540-028	519
540-028-00	519
540-033-00	519
540J2F	116
542-1(SYL)	5602
542-2(SYL)	5605
542-1033	128

To Be Replaced	ECG Replacement
542-1034	130
543-1(SYL)	124
544-2002-004	726
544-2002-008	912
544-2003-002	748
544-2003-005	968
544-2003-006	752
544-2004-001	1114
544-2006-001	1115
544-2006-011	1232
544-2007-001	993
544-2020-002	987
544-3001-001	9924
544-3001-002	9923
544-3001-103	4001B
544-3001-117	4017B
544-3001-140	4049B
544-3001-201	991
544C	1006
546	108
547J2F	125
549-1	106
549-2	159
550-026-00	123A
550-027-00	159
550-1(SYL)	194
551	108
551-006	761
551-007	754
551-008-00	941M
551-010-00	9946
551-013-00	9945
551A	761
552(ITT)	2011
554C(IC)	1142
554(IC)	1142
554(ITT)	2012
555-3(RCA)	128
555-4	128
555A(IC)	703A
555AB(IC)	703A
555C(IC)	703A
555H(IC)	1092
555(IC)	703A
556(ITT)	2013
556J	978
556L	978
557-1(SYL)	116
558C	1051
558C(IC)	1051
558(IC)	1051
558(ITT)	2014
559-1	159
559-1492-001	9911
559-1493-001	9921
559-1494-001	9913
559-1495-001	9909
559-1496-001	9910
559-1516-001	128
560-2	123A
561C(IC)	1079
561(IC)	1079
562C1(IC)	1050
562C(IC)	1050
563H1D369(IC)	1081A*
563H2(IC)	1081A*
563H(IC)	1081A*
564C(IC)	1088
565-072	128
565-074	123A
565-1	128
566H	1103
566H2(IC)	1052
566H(IC)	1052
566H-L	1052
566H-M	1052
566H-N	1052
567-0003-011	123A
568BLYC	336
568BLYCF	335
569-1(SYL)	177
569-2(SYL)	177
570-004503	123A
570-005503	123A
570-1	159
570-1A(SYL)	159
570-1(SYL)	159
570-2A(SYL)	159
570-2(SYL)	159
570C(IC)	1086A*
571-844	130
571-844A	130
571C(IC)	1078
572-0040-051	121
572-683	123A
573-469	123A
573-472	108
573-474	108
573-474A	108
573-475	108
573-479	123A
573-480	123A
573-481	123A
573-491	108
573-494	108
573-495	108
573-507	108
573-509	108
573-515	124
573-518	160
573-529	102A
573-532	128
574	159
574-844	162
574J(IC)	147A

To Be Replaced	ECG Replacement
575-0004-035	190
575-028	116
575-042	116
575-048	116
575-050	116
575C2	1140
575C2(IC)	1140
575C(IC)	1140
576-0001-002(Germanium)	102A
576-0001-002(Sears)	102A
576-0001-002(Silicon)	159
576-0001-003	102A
576-0001-004	123
576-0001-005	123
576-0001-006	108
576-0001-008	123A
576-0001-009	102A
576-0001-012	123A
576-0001-013	159
576-0001-014	102A
576-0001-018	123A
576-0002-001	241
576-0002-001(Sears)	152
576-0002-002	104
576-0002-003	130
576-0002-004	102A
576-0002-005	121
576-0002-006	123A
576-0002-008	159
576-0002-009	105
576-0002-010	105
576-0002-011	184
576-0002-012	102A
576-0002-013	103A
576-0002-026	241
576-0002-027	123A
576-0002-029	241
576-0003-001	108
576-0003-002	108
576-0003-003	108
576-0003-004	108
576-0003-005	108
576-0003-006	108
576-0003-007	108
576-0003-008	126
576-0003-009	126
576-0003-010	160
576-0003-011	123A
576-0003-012	106
576-0003-013	126
576-0003-014	126
576-0003-015	126
576-0003-017	159
576-0003-018	108
576-0003-019	159
576-0003-020	108
576-0003-021	108
576-0003-022	199
576-0003-023	161
576-0003-024	126
576-0003-025	160
576-0003-026	161
576-0003-027	108
576-0003-028	108
576-0003-029	107
576-0003-12(NPN)	123A
576-0003-12(PNP)	159
576-0003-224	222
576-0004-001	329
576-0004-004	329
576-0004-005	329
576-0004-006	329
576-0004-007	329
576-0004-008	311
576-0004-009	329
576-0004-02	128
576-0004-010	123A
576-0004-011	329
576-0004-012	329
576-0004-013	195A
576-0004-035	190
576-0004-104	329
576-0004-105	235
576-0005-001	6400
576-0005-004	128
576-0006-003	133
576-0006-011	108
576-0006-013	312
576-0006-221	221
576-0006-222	222
576-0006-223	222
576-0006-227	222
576-0007-001	172A
576-001	102A
576-002-001	186
576-003-009	160
576-005	102A
576-0036-212	195A
576-0036-213	195A
576-0036-847	123
576-0036-913	195A
576-0036-916	123A
576-0036-917	123A
576-0036-918	108
576-0036-919	108
576-0036-920	123A
576-0036-921	123A
576-0040-051	121
576-0040-251	130
576-0040-253	102A
576-0040-254	121
576-1	233
576-1(RCA)	161
576-1(SYL)	161
576-2(SYL)	161

To Be Replaced	ECG Replacement
576-3	723
576-8	7493A
576-14	740A
576-2000-278	105
576-2000-990	126
576-2000-993	126
576-2001-970	105
576H	1185
577-1(SYL)	161
577-2(SYL)	161
577-3(SYL)	161
577A	1082
577B196	5635
577H	1082
577H(IC)	1082
577N	1082
577R819H01	128
578.2	5072A
579R925H01	910
580-029	116
580R304H01	159
581-1(SYL)	123A
581B83-7	5697
582-1A(SYL)	159
582-1(SYL)	159
583-1(SYL)	222
584-1(SYL)	108
586-024	909
586-2	123A
586-151	9930
586-152	9936
586-153	9946
586-154	9099
586-155	9962
586-187	9945
586-294	7410
586-303	9932
586-308	9937
586-331	9806
586-412	9812
586-415	9157
586-416	9939
586-425	9093
586-437	1171
586-442	9158
586-517	9804
586-528	9802
586-546	9800
586-547	9808
586-617	74154
586-780	9810
587-033	74170
588-40-201	1100
588-40-202	1142
588-40-203	1087
588U	132
590	816
590-591731	194
590-591811	194
590-593031	123A
592-027	9910
592-028	9911
592-029-0	9914
592-032-0	9923
592-032-1	9923
592-079-0	9923
592-081-0	9914
592-1(SYL)	127
592A2	1195
592H2	1195
593D742-1	123A
594-1(SYL)	130
595-1	123A
595-1(SYL)	123A
595-2	123A
595-2(SYL)	123A
595-3(SYL)	123A
595C2	1187
596	1187
596-1(SYL)	120 or 116(4)
596-2	177
596-5	177
596-6(SYL)	519
596-8(SYL)	519
597-1(RCA)	159
599P3430	199
600	116
600-000-090	109
600-000-150	177
600-1(SYL)	5014A
600-2(SYL)	5018A
600-104-308	158
600-188-1-13	123A
600-188-1-20	123A
600-188-1-21	128
600-188-1-22	194
600-188-1-23	123A
600-207-801	199
600-224-605	199
600-229-201	289
600-301-801	123A
600A39	724
600C	177
600X0091-086	123A
600X0092-086	108
600X0093-086	161
600X0094-086	161
600X0095-086	159
600X0096-066	109
600X0097-066	109
600X0099-066	116
600X0100-066	177
600X0101-066	142A

To Be Replaced	ECG Replacement
601	116
601-000-062	137A
601-000-150	139A
601-040	160
601-054	126
601-065	103A
601-0100792	128
601-0100793	123A
601-0100810	234
601-0100865	7413
601-1	123A
601-1(Diode)	177
601-1(RCA)	123A
601-1(transistor)	123A
601-2	123A
601-113	108
601C	177
601X0048-066	116
601X0049-066	506
601X0149-086	123A
601X0150-066	109
601X0151-066	109
601X0152-066	116
601X0224-066	116
601X0225-066	178MP
601X0226-066	143A
601X0227-066	116
601X0375-006	506
601X0402-038(IC)	1046
601X0402-038(Zener)	143A
601X0417-086	159
602-000-001	116
602-032	121
602-040	102A
602-075	160
602-56	159
602-60	159
602-61	108
602-113	108
602X0008-002	199
602X0018-000	123A
602X0018-002	199
602X0019-000	116
602X0019-000	116
603-000-002	614
603-020	160
603-030	160
603-040	160
603-113	108
604	123A
604-030	160
604-080	160
604-1A(SYL)	121MP
604-1B(SYL)	121MP
604-1C(SYL)	121MP
604-1D(SYL)	121MP
604-1E(SYL)	121MP
604-1(SYL)	121MP
604-113	108
604B	116
604C	177
604(SEARS)	123A
605	123
605-030	102A
605-1(SYL)	128
605-113	108
606-020	102A
606-0(SYL)	177
606-113	116
606-6003-101	519
606-6003-102	519
606-6021-101	177
606-9601-101	123A
606-9602-101	123A
607-030	123A
607-113	116
608	116
608-030	116
608-1(SYL)	127
608-2	128
608-2(SYL)	127
608-101	116
608-112	127
608-113	116
609-020	160
609-030	116
609-0(SYL)	177
609-1(SYL)	127
609-112	123A
609-113	116
610	116
610-001-103	116
610-017-706	177
610-035	102A
610-035-1	102A
610-036	102A
610-036-1	102A
610-036-2	102A
610-036-3	102A
610-036-4	102A
610-036-5	102A
610-036-7	102A
610-036-8	102A
610-039	121
610-039-1	121
610-040	102A
610-040-1	102A
610-040-2	102A
610-041	108
610-041-1	108
610-041-2	108
610-041-3	108
610-042	108
610-042-1	108

@, * — See special notes on inside back cover.

To Be Replaced	ECG Replacement
610-043	102A
610-043-1	102A
610-043-2	102A
610-043-3	102A
610-043-4	102A
610-043-6	102A
610-043-7	102A
610-045	108
610-045-1	108
610-045-2	108
610-045-3	123A
610-045-4	123A
610-046-7	102A
610-050	160
610-050-1	160
610-050-2	160
610-050-3	160
610-051	160
610-051-1	160
610-051-2	160
610-051-4	160
610-052	126
610-052-1	126
610-053	160
610-053-1	160
610-053-2	160
610-055	160
610-055-1	160
610-055-2	160
610-055-3	160
610-056	126
610-056-1	126
610-056-2	126
610-056-3	126
610-056-4	126
610-067	121
610-067-1	121
610-067-2	121
610-067-3	121
610-068	121
610-068-1	121
610-069	108
610-069-1	108
610-070	123A
610-070-1	123A
610-070-2	123A
610-070-3	123A
610-071	124
610-071-1	124
610-072	108
610-072-1	108
610-072-2	108
610-073	108
610-073-1	108
610-074	126
610-074-1	126
610-076	123A
610-076-1	123A
610-076-2	123A
610-077	123A
610-077-1	123A
610-077-2	123A
610-077-3	123A
610-077-4	123A
610-077-5	123A
610-078	123A
610-078-1	123A
610-079	102A
610-079-1	102A
610-080	102A
610-080-1	102A
610-083	129
610-083-1	129
610-083-2	129
610-083-3	129
610C	116
612	116
612-1A5L	123A
612-16A	108
612-16(ZENITH)	108
612-60039	126
612-60039A	126
612C	177
613-4	154
613-72	108
613(ZENITH)	108
614	116
614-1	128
614-1(SYL)	156
614-3	123A
614-12	108
614-118	177
614A-1-5L	121
614A1(Delco)	744
614C	177
614X1	102A
614X2	102A
614X3	102A
614X4	102A
614X5	102A
614X6	102A
614X7	102A
614X8	103A
614X9	102A
614X10	102A
614(Zenith)	108
616	116
616C	177
617-10	123A
617-15	109
617-17	109
617-29	123A
617-46	116
617-50	102A
617-52	102A

To Be Replaced	ECG Replacement
617-53	116
617-54	160
617-55	160
617-56	126
617-57	160
617-58	160
617-62	116(2)
617-63	123A
617-64	123A
617-65	161
617-66	116(2)
617-67	123A
617-68	123A
617-69	158
617-70	102A
617-71	123A
617-87	123
617-117	152
617-156	109
617-161	123A
617-162	116
617-163	116
618	116
618C	177
619-3(RCA)	5641
620	116
620-1	159
620C	177
621-1(SYL)	109
622	116
622-1	128
622-1(RCA)	128
622-2	128
622C	177
623	307
623-0	307
623-1	186
623-2003-100	140A
623A	307
623B	307
623C	307
623D	307
623(RCA)	152
623SN	6356
624	116
624-0005	113
624-0006	113
624-0007	113
624-0009	116
624-0010	116
624-1	185
624(RCA)	153
625-1(RCA)	128
626	123A
626-1	123A
626(Rect.)	125
627-1	159
627-1(SYL)	116
627-4(SYL)	116
628-1(SYL)	186
628-2(SYL)	186
628-3	188
628-3(SYL)	186
629-2(SYL)	187
629-3	189
629A02	116
630-002	109
630-052	116
630-076	123A
630-077	140A
630-079	109
630-086	148A
630-2(SYL)	192
630-4(SYL)	192
631	222
631-1	129
631-2(SYL)	193
631-3(SYLVANIA)	129
631-4(SYL)	193
632-037-201	123A
632-037-210	123A
632-037-218	123A
632-037-300	199
632-039-418	229
632-073-318	199
632-073-510	289
632-1(SYL)	188 or 210
632-3	196
632-122-617	186A
632-197-406	235
633-056-439	290
633-1(SYL)	283
634-1(SYL)	186
635	159
635-066-000	312
635-1(RCA)	221
635-1(SYL)	196
636-1(SYL)	152
637-1	162
637-1(RCA)	162
637(RCA)	162
638	123A
638-1	128
638-1(RCA)	218
638-1(SYL)	184
638H	175
638HJ	175
639CL	128
639(ZENITH)	123A
640-1(SYL)	152
642-028	109
642-068	113
642-098	110MP

To Be Replaced	ECG Replacement
642-1	184
642-2D(SYL)	179
642-2E(SYL)	179
642-2F(SYL)	179
642-2(SYL)	179
642-3A(SYL)	179
642-3B(SYL)	179
642-3(SYL)	179
642-20(SYL)	179(2)
642-21(SYL)	179(2)
642-102	109
642-116	160
642-117	102A
642-119	109
642-126	177
642-132	109
642-147	160
642-150	102A
642-151	158
642-152	131
642-173	160
642-174	123A
642-176	121
642-186	138A
642-199	109
642-202	160
642-206	104
642-207	160
642-216	166
642-217	131
642-219	116
642-221	109
642-229	107
642-230	107
642-236	5071A
642-242	123A
642-246	123A
642-254	107
642-255	145A
642-260	107
642-261	184
642-264	104
642-266	185
642-268	107
642-269	107
642-270	107
642-271	121MP
642-272	121
642-274	107
642-275	177
642-277	103A
642-279	110MP
642-281	177
642-304	117
642-306	128
642-316	104
642-319	123A
642AS4076-101	107
643RIX	193
644-1	185
647-1	165
649-1	165
649B740	548
650	109
650-105	102
650-106	102
650-107	102
650-108	102
650-109	103
650-110	116
650C0	5006A
650C1	5007A
650C2	5007A
650C5	5008A
650C6	5008A
651	5009A
651C0	5009A
651C1	5009A
651C2	5009A
651C3	5009A
651C4	5010A
651C5	5010A
651C6	5010A
651C7	5010A
651C8	5010A
651C9	5011A
652	5012A
652C0	136A
652C1	5011A
652C2	5011A
652C3	5012A
652C4	5012A
652C5	5012A
652C6	5012A
652C7	137A
652C8	5013A
652(ITT)	2011
653-202	108
653C1	5014A
653C2	5014A
653C3	5014A
653C4	5014A
653C6	5015A
653C7	5015A
653C9	5016A
654-1(SYL)	312
654-2(SYL)	312
654-3(SYL)	452
654-4(SYL)	452
654C9	5018A
654(ITT)	2012
655C9	5019A
656-1(SYL)	118
656-2	182

To Be Replaced	ECG Replacement
656-4	154
656-136	102A
656-137	102A
656-138	158
656-139	102A
656-141	116
656-142	109
656(ITT)	2013
657-31	161
658(ITT)	2014
660-125	128
660-126	123A
660-127	108
660-128	128
660-131	123A
660-134	123
660-145	128
660-220	123A
660-221	123A
660-222	123A
660-224	158
660-225	123A
660-227	102A
660-228	103A
660-230	116
660B	102
661-000-001	601
663-1(SYL)	506
665-1A5L	160
665-2A5L	103A
665-4A5L	101
665A-1-5L	160
665B-1-5L	126
665C-1-5L	121
666-1-A-5L	102A
666-1(RCA)	128
666-1(SYL)	128
666-2-A-5L	102A
666-3A-5L	102A
668CS	108
669	159
669-1(RCA)	165
669A459H01	910D
669A464H01	9932
669A469H01	911D
669A471H01	7472
669A492H01	9962
671-1A(SYL)	102A
671-1B(SYL)	102A
671-1C(SYL)	102A
671-1(SYL)	102A
671A290H01	9930
671A291H01	9944
671A292H01	9945
671A293H01	9946
674-3A5L	100
675-153	158
675-154	102A
675-155	102A
675-156	102A
675-158	109
675-206	131MP
676-1	233
677A-1-5L	105
677B-1-5L	121MP
677C-1-5L	121MP
678-1(SYL)	5604
678-3(SYL)	5604
678-4(SYL)	5604
679-1	773
680-1	753
680-1(IC)	753
680-1(RCA)	161
680-1(Transistor)	161
684-1	181
684-1(SYL)	181
684-652423-1	116
684A-1-5L	121
686-0012	128
686-0112	128
686-0130	128
686-0165	128
686-0210	175
686-0210-0	175
686-0243	130
686-0243-0	130
686-0325-0	159
686-143	130
686-143A	130
686-229-0	128
686-257-0	199
686-2700	159
687-1	191
687-2(SYL)	177
688B-1-5L	160
688C-1-5L	100
690-1(SYL)	132
690L-021H25	152
690L-021H26	153
690L270H02	121
690L297H01	160
690L297H02	121
690V02H69	108
690V010H40	161
690V010H41	108
690V010H42	126
690V028H28	108
690V028H48	108
690V028H69	108
690V028H89	108
690V031H33	116
690V034H29	126
690V034H30	102A
690V034H31	102A
690V034H32	109

To Be Replaced	ECG Replacement
690V034H39	102
690V034H74	109
690V037H92	120
690V038H22	156
690V038H23	113
690V039H17	119
690V039H22	156
690V039H52	116
690V039H54	120
690V040H57	126
690V040H58	126
690V040H59	126
690V040H60	126
690V040H61	102
690V040H62	102
690V040H63	109
690V041H08	116
690V043H62	158
690V043H63	158
690V047H54	126
690V047H55	126
690V047H56	100
690V047H57	100
690V047H58	102
690V047H59	102A
690V047H60	102
690V047H61	109
690V047H97	123A
690V049H81	108
690V052H23	102
690V052H24	102
690V052H50	109
690V052H63	160
690V052H68	109
690V053H57	116
690V054H20	102A
690V054H21	102
690V056H27	160
690V056H29	160
690V056H30	160
690V056H31	160
690V056H32	160
690V056H33	102A
690V056H34	102A
690V056H89	126
690V056H90	102
690V057H25	160
690V057H27	102
690V057H28	102
690V057H59	126
690V057H62	126
690V059H20	102A
690V059H21	158
690V059H52	102A
690V059H55	102A
690V059H63	109
690V060H58	108
690V060H59	108
690V061H98	102
690V061H99	102
690V062H47	102A
690V063H14	126
690V063H15	126
690V063H16	102
690V063H17	102
690V063H50	102A
690V063H51	102
690V066H44	126
690V066H45	126
690V066H46	102
690V066H47	102
690V066H48	109
690V066H49	126
690V066H89	160
690V067H09	109
690V067H35	103A
690V068H29	126
690V068H30	102
690V068H31	102
690V068H32	109
690V069H39	116
690V070H49	108
690V070H98	108
690V073H59	126
690V073H60	109
690V073H85	126
690V075H62	128
690V075H68	108
690V077H34	126
690V077H35	126
690V077H36	126
690V077H37	102
690V077H73	102A
690V080H36	161
690V080H37	126
690V080H38	154
690V080H39	102
690V080H40	126
690V080H41	123
690V080H42	127
690V080H43	127
690V080H44	102
690V080H45	163A
690V080H47	116
690V080H49	506
690V080H50	506
690V080H51	506
690V080H52	116
690V080H53	167
690V080H54	156
690V080H91	116
690V081H07	108
690V081H08	160
690V081H09	121
690V081H40	166

To Be Replaced	ECG Replacement
690V081H91	506
690V081H92	145A
690V081H96	103A
690V081H97	104
690V082H47	158
690V083H89	109
690V084H60	126
690V084H61	102A
690V084H62	123A
690V084H63	102A
690V084H94	108
690V084H95	108
690V084H96	108
690V085	158
690V085H42	126
690V085H44	158
690V086H39	102
690V086H51	123A
690V086H52	108
690V086H86	159
690V086H87	108
690V086H88	123A
690V086H89	129
690V086H90	128
690V086H91	116
690V086H92	116
690V086H94	161
690V086H95	161
690V086H96	108
690V088H20	177
690V088H44	108
690V088H45	108
690V088H46	107
690V088H47	107
690V088H48	108
690V088H49	107
690V088H50	123A
690V088H51	123A
690V088H52	102A
690V089H46	107
690V089H86	107
690V089H89	123A
690V089H90	102A
690V089H91	116
690V092H52	123A
690V092H54	123A
690V092H81	123A
690V092H84	123A
690V092H85	109
690V092H88	117
690V092H96	123A
690V092H97	123A
690V094H17	130
690V094H18	102A
690V094H19	102A
690V094H20	102A
690V094H21	123A
690V094H35	116
690V097H59	102A
690V097H62	123A
690V098H48	123A
690V098H49	123A
690V098H50	123A
690V098H51	131
690V098H52	109
690V098H53	116
690V099H59	158
690V099H79	123A
690V099H80	103A&158(CP)
690V0103H27	123A
690V38H25	358
690V68H32	109
690V73H60	109
690V102H39	103A
690V102H40	177
690V102H71	123A
690V102H96	126
690V103H23	108
690V103H24	108
690V103H25	108
690V103H26	108
690V103H27	108
690V103H28	107
690V103H30	128
690V103H31	123A
690V103H33	123A
690V103H53	142A
690V103H54	109
690V104H53	102A
690V104H54	102A
690V105H32	139A
690V109H44	116
690V109H46	107
690V110H30	108
690V110H31	108
690V110H32	108
690V110H33	108
690V110H34	128
690V110H36	128
690V110H55	129
690V114H29	108
690V114H30	123A
690V114H31	108
690V114H33	123A
690V114H36	116
690V116H19	108
690V116H20	107
690V116H21	123A
690V116H22	133
690V116H23	159
690V116H24	128
690V116H25	185
690V116H26	184
690V116H40	142A
690V116H41	116

To Be Replaced	ECG Replacement
690V118H57	177
690V118H58	116
690V118H59	108
690V118H60	159
690V118H61	159
690V118H62	102A
690V119H14	116
690V119H15	177
690V119H54	158
690V119H94	126
690V119H95	160
690V119H96	160
690V119H97	160
690V037H91	109
691C844	128
692-0014-00	9917
692-0016-00	9924
692-0020-00	9989
692-1(SYL)	132
692-2(SYL)	132
693EP	123A
693FS	123A
693G	123A
693GT	123A
693GV	199
694D	123A
694E	123A
696-3(SYL)	152
696-8(REGENCY)	341
699	123A
700-04	133
700-110	186
700-113	130
700-133	159
700-134	123A
700-135	128
700-136	129
700-137	116
700-154	123A
700-155	199
700-156	199
700-159	139A
700-321	5066A
700-325	123A
700-848A	908
700A858-285	116
700A858-286	116
700A-858-318	199
700A858-318	123A
700A858-319	199
700A858-322	177
700A-858-328	199
700A858-328	123A
702-0002	107
702-810	113
703 056 (4)	123A
703-1	128
703-2	128
703B	128
703HC	703A
705-600007	5633
706BC	1114
706Bc	1114
706BC	1114
706BPC	1114
706BPc	1114
707W00004	109
707W00044	116
707W00048	5651
707W00057	123A
707W00070	123A
707W00071	140A
707W00073	5401
707W00079	159
707W00080	159
707W00081	123A
707W00083	123A
707W00084	6402
707W00086	5009A
707W00087	5014A
707W00090	184
707W00091	157
707W00093	152
707W00104	5004A
707W00107	5007A
707W00109	5009A
707W00110	5010A
707W00114	5014A
707W00116	5016A
707W00119	5019A
707W00155	5066A
707W00159	5069A
707W00160	135A
707W00161	136A
707W00163	137A
707W00168	139A
707W00169	140A
707W00170	5074A
707W00177	5077A
707W00179	5079A
707W00183	146A
707W00201	123A
707W00204	154
707W00205	5011A
707W00207	5103A
707W00215	116
707W00218	172A
707W00222	159
707W00227	5453
707W00243	5454
707W00244	5454
707W00255	116
707W00259	116
707W00265	177
707W00266	159

To Be Replaced	ECG Replacement
707W00270	162
707W00272	194
707W00273	519
707W00274	5801
707W00317	159
707W00322	5454
707W00345	5402
707W00347	109
707W00380	184
707W00401	5071A
707W00402	5133A
707W00404	5081A
707W00405	5077A
707W00410	5129A
707W00411	137A
707W00412	5090A
707W00413	5096A
707W00414	5157A
707W00415	5158A
707W00416	5122A
707W00521	189
707W00550	123A
707W00590	137A
707W00640	116
707W00641	116
707W00642	116
707W00643	116
707W00644	116
707W00645	125
707W00646	125
708-1(SYL)	284
709CJ	909D
709CL	909
709CN	909D
709DC	909D
709HC	909
709PC	909D
710	116
710CE	910
710CJ	910D
710CL	910
710CN	910D
710DC	910D
710HC	910
710PC	910D
711-001	223
711CE	911
711CJ	911D
711CL	911
711CN	911D
711DC	911D
711HC	911
711PC	911D
715EN	123A
715FB	107
715HC	915
716HC	716
720-2N3906	159
720-2N4221	102A
720-4-01	330
720-4-02	330
720-18	159
720-19	175
720-21	133
720-23	284
720-24	242
720-27	188
720-30	199
720-31	130
720-32	152
720-35	159
720-37	128
720-44	6401
720-46	289
720-47	123A
720-48	159
720-49	199
720-50	159
720-51	123A
720-52	292
720-61	186
720-62	187
720-64	129
720-69	172A
720-70	6401
720-71	183
720-74	157
720-35019	102
720-35019A	102A
720DC	744
720Dc	744
720PC	744
720SDC	744
720SPC	744
723DC	923D
723HC	923
723PC	923D
725-008	726
725EHC	925
725HC	925
729-3	128
729DC	720
729PC	720
732DC	718
732PC	718
733-0100-699	187
733W00005	9109
733W00021	941M
733W00022	74141
733W00024	9930
733W00025	9932
733W00026	9933
733W00027	9936
733W00028	9946
733W00029	9962

To Be Replaced	ECG Replacement
733W00030	9093
733W00032	9112
733W00035	941D
733W00039	7490
733W00042	7400
733W00043	7420
733W00045	7407
733W00047	9094
733W00048	9937
733W00049	9949
733W00050	9963
733W00051	9961
733W00053	7442
733W00059	309K
733W00060	9937
733W00061	9935
733W00064	7404
733W00065	7410
733W00066	7437
733W00067	7474
733W00068	7486
733W00069	7476
733W00070	9808
733W00076	74193
733W00091	9806
733W00094	9157
733W00097	9157
733W00103	74107
733W00108	9807
733W00109	74161
733W00121	7411
733W00124	7408
733W00126	7432
733W00127	7438
733W00128	7426
733W00132	7482
733W00133	7493A
733W00134	74121
733W00135	74164
733W00137	923D
733W00139	955M
733W00163	74151
733W00183	74150
733W00191	74155
733W00211	4011B
733W00215	4015B
733W00317	74H74
733W00320	74H11
733W00323	74153
733W00332	74H51
733W00333	74H40
733W00350	74182
734EU	132
735-1(SYL)	121
737(ZENITH)	123A
738-1(SYL)	280
739-1	121MP
739-1(SYL)	121MP
739DC	725
739H01	123A
739PC	725
740-1003-150	1021
740-2001-110	1014
740-2001-306	1029
740-2001-307	722
740-2002-111	708
740-2003-150	1021
740-2007-120	1087
740-5853-300	1005
740-5903-301	1006
740-8120-160	1005
740-8160-190	1003
740-9000-017	1047
740-9000-544	1142
740-9000-554	1142
740-9000-566	1052
740-9003-301	1006
740-9007-046	1108
740-9007-205	1155
740-9011-322	1037
740-9016-105	720
740-9017-092	1023
740-9037-120	1087
740-9037-204	1153
740-9607-205	1155
740HC	940
741-1	121MP
741-1(SYL)	121MP
741-2(SYL)	121MP
741CJ	941D
741CN	941D
741CP	941M
741DC	941D
741HC	941
741PC	941D
741TC	941M
742	109
742-1	188
742-1(Metal)(SYL)	128/401
742-1(Plastic)(SYL)	188
742C2030-020	130
742(TRANSISTOR)	107
744-1(SYL)	108
745-0004	3051
745-0006	3050
745-0016	3057
746HC	707
746PC	790
747CE	947
747CL	947
747DC	947D
747HC	947
747PC	947D
748BE	1171
748CE	1171

To Be Replaced	ECG Replacement
748CV	975
748HC	1171
748(ZENITH)	123A
749	949
749-8160-190	1003
749(Bendix)	949
749DHC	949
750-045	175
750-137	102
750-138	102
750-139	102
750-140	102
750-141	116
750-35019	102A
750A858-285	116
750A858-328	199
750A858-448	152
750C838-123	123A
750C838-124	123A
750C838-125	123A
750C871-1	HiDiv-1
750C871-2	HiDiv-1
750C871-3	HiDiv-1
750C871-4	HiDiv-1
750C871-5	HiDiv-1
750C871-6	HiDiv-1
750C871-7	HiDiv-1
750C871-8	HiDiv-1
750D858-211	125
750D858-212	123A
750D858-213	108
750M63-104	160
750M63-105	158
750M63-115	102A
750M63-116	160
750M63-117	160
750M63-119	123A
750M63-120	123A
750M63-121	102A&103A(CP)
750M63-122	102A&103A(CP)
750M63-146	123A
750M63-147	158
750M63-148	158
750M63-149	116
751-2001-212	116
751-6300-001	116
751-9001-124	116
752A	754
753-0100-699	187
753-0101-047	108
753-0101-226	186
753-1104-951	159
753-1303-801	229
753-1372-100	123A
753-1644-100	199
753-1828-001	123A
753-2000-003	123A
753-2000-004	123A
753-2000-006	175
753-2000-007	229
753-2000-008	123A
753-2000-009	123A
753-2000-011	123A
753-2000-100	199
753-2000-101	159
753-2000-107	128
753-2000-460	107
753-2000-463	131MP
753-2000-535	229
753-2000-710	108
753-2000-711	123A
753-2000-735	123A
753-2000-870	123A
753-2000-871	123A
753-2001-173	152
753-2100-001	123A
753-2100-002	131
753-2100-008	123A
753-3000-535	229
753-4000-010	199
753-4000-011	123A
753-4000-024	133
753-4000-025	132
753-4000-101	123A
753-4000-537	123A
753-4000-668	107
753-4000-929	107
753-4001-474	131
753-4001-931	184
753-4001-932	152
753-4004-248	159
753-5751-359	107
753-5851-359	107
753-6000-002	199
753-6000-019	132
753-8400-230	199
753-8500-380	199
753-8510-470	128
753-9000-019	132
753-9000-096	186
753-9000-839	199
753-9000-922	107
753-9001-674	229
753-9001-675	229
753-9010-021	6400
753-9010-235	152
753-9020-784	229
753-9050-785	229
753-5751359	229
753Tc	736
753TC	736
754-0102-139	611
754-900-124	116
754-1003-030	110
754-2000-001	177

To Be Replaced	ECG Replacement
754-2000-002	116
754-2000-005	116
754-2000-009	109
754-2000-011	177
754-2009-150	177
754-2509-150	177
754-2720-007	138A
754-2720-021	177
754-4000-088	109
754-4000-188	109
754-4000-410	109
754-4000-553	612
754-5000-021	116
754-5710-219	5072A
754-5750-282	5072A
754-5750-283	177
754-5750-284	116
754-5850-284	5072A
754-5853-300	1005
754-5900-090	109
754-8500-380	5072A
754-9000-002	116
754-9000-082	5072A
754-9000-460	109
754-9000-473	519
754-9000-953	116
754-9001-124	116
754-9002-687	614
754-9030-009	5073A
754-9052-473	519
754-9053-090	139A
755-422494	159
755-845049	519
756	116
758Dc	743
758DC	743
758Pc	743
758PC	743
762-2	231
762-105-00	129
762-110	234
762-120	129
763-1	128
766-100999	223
767CL	123A
767DC	722
767PC	722
767(ZENITH)	123A
768	5521
769-1(SYL)	123A
770-045	152
772-101-00	199
772-110	123A
772-120-00	128
772-121-00	128
772A	107
772B	107
772B1	107
772BJ	107
772BL	107
772BM	107
772BN	107
772BY	107
772C	107
772CC	107
772D	107
772D1	107
772DC	107
772DG	107
772E	107
772EH	107
772F	107
772FE	107
772G	107
773-1(SYL)	123AP
773CL	128
773RED	108
773(ZENITH)	123A
774CL	129
774ORN	108
774(ZENITH)	159
775-1(SYL)	172A
775-2(SYL)	172/410
775-3(SYL)	172/410
775BRN	108
776-1A(SYL)	159
776-1(SYL)	159
776-1(Sylvania)	159
776-2(Philco)	123A
776-2(SYL)	159
776-3(SYL)	159
776-151	123A
776-183	123A
776GRN	123A
776Y	224
777-1A(SYL)	121MP
777-1B(SYL)	121MP
777-1C(SYL)	121MP
777-1D(SYL)	121MP
777-1(SYL)	552
778-1A(SYL)	121MP
778-1B(SYL)	121MP
778-1C(SYL)	121MP
778-1D(SYL)	121MP
778-1(SYL)	121MP
778-3(SYL)	500A
779BLU	108
780DC	714
780PC	714
780WHT	123A
781DC	715
781PC	715
783RED	108
784ORN	108

To Be Replaced	ECG Replacement
785-1(SYL)	102A
785YEL	123A
786	108
787BLU	108
787PC	797
791	123A
792-1(SYL)	102A
792-238	116
792-286	102
792-287	102
792-288	102
792-289	102
792-290	102
792-292	109
800-000-025	500A
800-0004-P090	724
800-001-031-1	159
800-001-034	123A
800-001-106-1	128
800-002-00	110MP
800-003-00	109
800-003-07	103A&158(CP)
800-004-00	142A
800-005-00	109
800-006-00	116
800-007-00	113
800-008-00	120
800-010-00	156
800-011-00	119
800-012-00	118
800-013-00	116
800-014-00	116
800-014-01	116
800-016-00	177
800-017-00	116(4)
800-018-00	156
800-018-02	156
800-020-00	109
800-021-00	177
800-022-00	109
800-023-00	142A
800-024-00	116
800-028-00	5075A
800-029-30	506
800-030-00	5071A
800-032-00	116
800-034-00	5120A
800-035-00	142A
800-036-00	177
800-037-00	156
800-038-00	116
800-039-00	109
800-040-00	177
800-041-00	116
800-042-00	177
800-043-00	156
800-045-00	5414
800-046-00	116
800-050-00	156
800-051-00	156
800-101-101-1	123A
800-101-101-2	128
800-101-102-1	123A
800-101-108-1	159
800-101-114-1	129
800-102-001	519
800-102-101-1	519
800-122	124
800-158	124
800-172	124
800-180	124
800-181	124
800-196	104MP
800-203	124
800-204	124
800-205	158
800-208	102A&103A(CP)
800-219	102A&103A(CP)
800-245	128&129(CP)
800-250-102	123
800-253	121MP
800-256(Metal)	124
800-256(Plastic)	157
800-270	184&185(CP)
800-282	506
800-284	129
800-289	184&185(CP)
800-294	128&129(CP)
800-305	128&129(CP)
800-310	103A&158(CP)
800-315	128&129(CP)
800-321	124
800-328	128&129(CP)
800-329	104
800-362	152&153(CP)
800-366	152&153(CP)
800-401	124
800-501-00	123A
800-501-01	123A
800-501-02	123A
800-501-03	123A
800-501-04	123A
800-501-11	123A
800-501-22	123A
800-502-00	102A
800-503-00	103A&158(CP)
800-504-00	160
800-505-00	102A
800-506-00	103A
800-507-00	121
800-508-00	123A
800-509-00	123A
800-510-00	130
800-510-01	130
800-511-00	129

To Be Replaced	ECG Replacement
800-512-00	128
800-513-00	128
800-514-00	123A
800-515-00	128
800-516-00	129
800-517-00	109
800-518-00	121
800-521-01	123A
800-521-02	128
800-521-02(Penncrest)	188
800-521-03	128
800-522-01	123A
800-522-02	123A
800-522-02(Penncrest)	188
800-522-03	128
800-522-04	123A
800-523-01	159
800-523-02	159
800-523-02(Penncrest)	189
800-524-02	130
800-524-02A	130
800-524-03	130
800-524-03A	130
800-524-04A	130
800-525-03	129
800-525-04	159
800-525-04A	130
800-526-00	123A
800-527-00	159
800-528	103A
800-528-00	103A
800-529-00	123A
800-530-00	123A
800-530-01	123A
800-533-00	152
800-533-01	184
800-534-00	123A
800-534-01	123A
800-535-00	132
800-535-01	132
800-536-00	108
800-537-01	103A
800-537-02	130MP
800-537-03	158
800-538-00	123A
800-544-00	123A
800-544-00(U.J.T.)	6400
800-544-10	123A
800-544-20	123A
800-544-30	123A
800-546-00	152
800-547-00	159
800-548-00	123A
800-550-00	162
800-550-10	163A
800-552-00	191
800-557-00	161
800-557-00	161
800-557-00	161
800-616	HiDiv-3
800-669B	128
800-670B	297&298
800-672	293&294
800-764	165
800-791	521
800-818	287&288
800-50100	123A
800-50300	103A
800-50400	160
800-50500	126
800-50600	103A
800-50700	121
800-51500	123A
800-51600	129
800-52102	123A
800-52202	123A
800-52302	123A
800-52402	130
800-52600	123A
800-52700	129
800-52800	103A
800-53001	123
800-53300	128
800-53400	123A
800-53600	108
800-53702	130MP
801-04900	126
801-05200	126
801-05300	126
801B	123A
802-05400	102A
802-05600	102A
802-22631U	102A
802-36400	102A
802-36430	102A
802-43900	102A
803-18250	123A
803-37390	123A
803-38030	108
803-38040	108
803-39430	108
803-39440	108
803-83840	108
803-83930	108
803-83940	123A
803-89910	123A
803-89930	123A
804	123A
804-1(SYL)	123A
804-14120	130
804-14130	130
804-21980	123A
804A765-2	5809
805-1(SYL)	102
805-1060	109

To Be Replaced	ECG Replacement
805-10600	109
806-1(SYL)	121
807-1(Philco)	194
807-1(SYL)	194
807-2(SYL)	123A
808-1(SYL)	161
808-2(SYL)	161
808-206	116
808-304	102A
808-305	102A
808-306	102A
808-307	102A
808-308	102A
808-309	103A
808-310	102A
808-311	102A
808-312	109
809-1(SYL)	154
810	788
810-1(SYL)	108
815-003	5527
815-181D	102
815-1810	102A
817-275	175
818-1(SYL)	507
818WHT	123A
819-1	128
819-1(SYL)	153
822	123A
822-1	116
822-1(SYL)	319
822-1(Sylvania)	161
822-2	116
822-3	116
822-4	116
822-5	116
822A	123A
822ABLU	123A
822B	123A
823B	123A
823WHT	123A
824-09501	123A
824-1(Last IF)(SYL)	233
824-1(SYL)	319
824-2(SYL)	319
824-3(SYL)	319
824-10300	129
826-1	159
826-1A(SYL)	159
826-1(SYL)	159
826-2A(SYL)	159
826-2(SYL)	159
826-3A(SYL)	159
826-3(SYL)	159
827BRN	123A
828GRN	123A
828S	123A
829	159
829A	159
829B	159
829C	159
829D	159
829E	159
829F	159
830	102A
833	159
833-1(SYL)	128
834-250-011	152
834-6066	123A
835-1(SYL)	161
835-300-0002	5547
836-1(SYL)	102
838-1(SYL)	196
839-1(SYL)	197
840-0300-577	1082
840-0301-020	1160
840-2(SYL)	123A
841-1(SYL)	108
842-1(SYL)	123A
845-1(RCA)	346
846-1(RCA)	186A
846-2(RCA)	186A
847-2(RCA)	351
847-3(RCA)	351
847-6(RCA)	351
847BLK	123A
851-0372-130	116
851-1(SYL)	194
853-0300-471	293
853-0300-632	123A
853-0300-634	187
853-0300-643	193
853-0300-644	199
853-0300-900	123A
853-0300-923	123A
853-0301-096	186A
853-0301-317	289
853-0373-110	123A
853-0401-209	297
854-0372-020	116
854-0372-180	139A
858	199
858C	1198
858GS	123A
859GK	199
860-022-01	181
860-1(SYL)	116
861	1254
861C	1254
861CE	1254
861E	1254
863-254B	177
863-567B	177
863-776B	177

To Be Replaced	ECG Replacement
863-972	109
865-1(SYL)	123A
866-6	130
866-6(BENDIX)	130
866-665-9	130
867-2(SYL)	177
868-1(SYL)	506
869-1(SYL)	191
870-1(SYL)	165
870-2(SYL)	165
870-3(SYL)	165
872-7	177
879-1(SYL)	145A
879-2(SYL)	142A
879-3(SYL)	145A
879-4(SYL)	138A
879-6(SYL)	5079A
879-7(SYL)	5079A
880-101-00	703A
880-102-00	726
880-103-00	9914
880-207-000	116
880-250-102	123A
880-250-107	129
880-250-108	123A
880-250-109	123A
881-250-102	123A
881-250-107	129
881-250-108	123A
881-250-109	123A
881-250108	199
884-1(SYL)	152
884-250-001	121
884-250-010	121
884-250-011	184
886-1(SYL)	126
887-1(SYL)	126
888-3(SYL)	102
889-1(SYL)	126
890-1(SYL)	109
900-1(SYL)	220
900HC	9900
901-000-6-51	102A
901-0130-0	116
901-0511	5869
901-1(SYL)	5814
901-5188-4	109
901-5188-7	109
901-5553-7	612
902-000-2-04	199
902-000-8-04	289
902-001-7-18	229
902-002-3-06	199
902-003-0-12	229
902-003-3-17	199
902-003-6-06	199
903-3	123A
903-3G	123A
903-8B	110
903-9B	109
903-10B	109
903-12B	109
903-13B	117
903-14B	116
903-15B	116
903-16B	109
903-17	156
903-17A	156
903-17B	156
903-17C	156
903-18B	109
903-20	177
903-23	109
903-23A	109
903-23B	109
903-23C	109
903-23D	109
903-23E	109
903-25B	177
903-26B	134A
903-27B	109
903-28B	116
903-29B	109
903-30B	109
903-34	109
903-34A	109
903-34B	109
903-34C	109
903-34D	109
903-34E	109
903-36	125
903-36A	125
903-36B	125
903-36C	125
903-36D	125
903-36F	125
903-37	109
903-37B	109
903-41B	177
903-42B	177
903-43B	109
903-45B	109
903-47	612
903-48B	177
903-49B	116
903-51	109
903-51B	109
903-52B	116
903-54B	109
903-58B	177
903-65B	109
903-68B	506
903-69B	116
903-72B	177
903-73B	5022A

To Be Replaced	ECG Replacement
903-79B	116
903-82B	177
903-83B	109
903-84B	177
903-92B	109
903-95B	177
903-97B	142A
903-99	610
903-100B	177
903-103B	109
903-104B	116
903-105B	116
903-108	109
903-108B	109
903-112B	177
903-113B	109
903-114B	109
903-115B	109
903-116B	177
903-117B	116
903-118	177
903-118B	177
903-119B	139A
903-120B	136A
903-121	177
903-121B	177
903-137	610
903-156B	116
903-164B	116
903-166B	5071A
903-167B	110
903-168B	109
903-169B	116
903-171B	614
903-177B	177
903-178	177
903-179	139A
903-180	5071A
903-197	116
903-199	116(2)
903-311	177
903-1718	614
903HC	9903
903Y00212	117
903Y00228	139A
903Y002149	123A
903Y002150	199
903Y002151	187
903Y002152	186
904-95	123A
904-95A	123A
904-95B	199
904-96B	123A
904-97B	109
904HC	9904
905-5	1024
905-30B	1003
905-38B	722
905-39B	1075A
905-46B	722
905-60	1003
905-61	1115
905-63	743
905-102	7490
905-105	1004
905-106	1308
905HC	9905
906HC	9906
907HC	9907
908D1	109
908HC	9908
909-27125-140	123A
909-27125-160	107
909HC	9909
909(RCA)	107
910HC	9910
910X1	158
910X2	158
910X3	102A
910X4	102A
910X5	102A
910X6	102A
910X7	158
910X8	158
910X9	158
910X10	158
911-000-1-00	1036
911-000-3-02	1055
911HC	9911
912-1A6A	123A
912HC	9912
913HC	9913
914-000-2-00	177
914-000-4-00	109
914-000-6-00	177
914-000-7-00	612
914-001-1-00	177
914-001-7-00	110
914A-1-6-5	121
914F298-1	128
914HC	9914
915HC	9915
916-1(SYL)	123A
916-31001-1	102A
916-31001-1B	102A
916-31001-7B	102A
916-31003-5B	102A
916-31007-5	102A
916-31007-5B	102A
916-31012-6	102A
916-31012-6B	102A
916-31019-3	126
916-31019-3B	126
916-31024-3	123A
916-31024-3B	107

To Be Replaced	ECG Replacement
916-31024-5	107
916-31024-5B	108
916-31025-4	161
916-31025-4B	161
916-31025-5	123A
916-31025-5B	107
916-31026-8B	123A
916-31026-9B	102A
916-32000-7	109
916-32003-2	109
916-32006-2	109
916-33003-2	116(4)
917-2(SYL)	552
917-1201-0	1003
918-1(SYL)	130
919-001172	116
919-001172-1	116
919-00-1445	136A
919-00-1445-002	142A
919-00-1445-1	138A
919-001445-2	142A
919-00-1445-2	142A
919-001449	156
919-001449-1	156
919-00-1449-1	156
919-001449-3	156
919-002240-1	156
919-002440	156
919-002440-1	156
919-00-2440-1	116
919-002440-2	156
919-00-2440-2	116
919-003309	5079A
919-00-3309-1	5079A
919-003309-1	5077A
919-00-3309-2	5127A
919-00-3309-3	5131A
919-004326	116
919-00-4326	177
919-00-4799	177
919-004799	116
919-005045	5802
919-00-5045	117
919-007109	116
919-00-7109	117
919-007109RA	116
919-00-7394	177
919-007394	116
919-00-7766	116
919-007776	116
919-00-7776	116
919-007776RA	117
919-008862	156
919-009459RA	116
919-00-9929	177
919-01-0459	116
919-01-0623	116
919-01-0829	117
919-01-0829-1	117
919-01-0867	109
919-01-0873	177
919-01-1172-1	177
919-01-1211	116
919-01-1212	116
919-01-1213	139A
919-01-1214	5072A
919-01-1215	177
919-01-1307	177
919-01-1339	117
919-01-1340	5127A
919-01-3035	139A
919-01-3058	135A
919-01-3072	177
919-010459	156
919-010623	156
919-010829	156
919-010829-1	156
919-010867	109
919-010873	116
919-010873-050	519
919-011211	156
919-011212	116
919-011215	116
919-011307	116
919-011339	156
919-011340	142A
919-013036	156
919-013044	116
919-013058	142A
919-013059	177
919-013060	116
919-013061	156
919-013067	177
919-013072	116
919-013079	156
919-013081	116
919-013082	177
919-015618-1	5079A
919-017406-010	5125A
919-017406-011	5136A
919-017406-013	5130A
919-017406-056	5133A
919-017406-057	5125A
919-72-2	5642
921-1A	160
921-1B	160
921-2A	160
921-2B	160
921-3A	160
921-3B	126
921-4A	160
921-4B	126
921-5A	103A
921-5B	103A
921-6A	103A

To Be Replaced	ECG Replacement
921-6B	103A
921-7	123A
921-7B	103A
921-8	123A
921-9B	160
921-10B	160
921-11B	160
921-12B	160
921-13B	160
921-14B	102A
921-15B	160
921-16B	160
921-17B	160
921-20	108
921-20A	108
921-20B	108
921-20BK	123A
921-21	108
921-21A	108
921-21B	108
921-21BK	108
921-22	108
921-22A	108
921-22B	108
921-22BG	123A
921-23	108
921-23A	108
921-23B	108
921-23BK	123A
921-24B	102A
921-25B	160
921-26	123A
921-26A	123A
921-26B	160
921-27	102A
921-27A	102A
921-27B	123A
921-28	123A
921-28A	123A
921-28B	123A
921-28BLU	123A
921-29B	159
921-30	108
921-30A	108
921-30B	108
921-31	108
921-31A	108
921-31B	108
921-32	108
921-32A	108
921-32B	108
921-33	108
921-33B	108
921-34	108
921-34A	108
921-34B	108
921-35	102A
921-35A	102A
921-35B	102A
921-36B	102A
921-37B	102A
921-38	102A
921-38A	102A
921-38B	102A
921-39	102A
921-39A	102A
921-39B	102A
921-40	102A
921-40A	102A
921-40B	102A
921-41B	102A
921-43B	123A
921-44B	158
921-45	102A
921-45A	102A
921-45B	102A
921-46	123A
921-46A	123A
921-46B	103A
921-46BK	123A
921-47	123A
921-47A	123A
921-47B	129
921-47BL	123A
921-48B	123A
921-49B	123A
921-50B	123A
921-51B	102A
921-52B	102A
921-53B	158
921-54B	103A
921-55B	161
921-56B	161
921-57B	161
921-58B	161
921-59B	107
921-60B	128
921-61B	124
921-62	107
921-62A	107
921-62B	107
921-63	107
921-63A	107
921-63B	107
921-64	107
921-64A	107
921-64B	107
921-64C	107
921-65	126
921-65A	126
921-65B	126
921-66	126
921-66A	126
921-66B	126
921-67	102A

To Be Replaced	ECG Replacement
921-67A	102A
921-67B	102A
921-68	102A
921-68A	102A
921-68B	102A
921-69	158
921-69A	158
921-69B	158
921-70	159
921-70A	159
921-70B	159
921-71	103A
921-71A	103A
921-71B	103A
921-72B	108
921-73B	123A
921-75	229
921-77B	123A
921-84	107
921-84A	107
921-84B	107
921-85	107
921-85A	107
921-85B	107
921-86	107
921-86A	107
921-86B	107
921-88	124
921-88A	124
921-88B	124
921-92B	199
921-93B	123A
921-97B	108
921-98B	108
921-99B	123A
921-100B	102A
921-102	107
921-102A	107
921-102B	107
921-103B	106
921-105B	158
921-106B	108
921-109B	123A
921-110B	129
921-111B	199
921-112B	106
921-114	229
921-114B	199
921-115	229
921-115B	199
921-116	229
921-116B	199
921-117B	123A
921-118B	158
921-119	229
921-119B	108
921-120B	123A
921-123B	123A
921-124B	123A
921-125B	123A
921-126B	132
921-127B	123A
921-128B	123A
921-129B	108
921-133B	199
921-140B	158
921-141B	107
921-142B	107
921-143B	107
921-145B	107
921-147B	102A
921-148B	102A
921-150B	102A
921-152B	107
921-153B	102A
921-154B	199
921-155B	123A
921-156B	124
921-157B	220
921-158B	108
921-159B	123A
921-160B	159
921-161B	123A
921-163B	186
921-170B	108
921-171B	108
921-172B	108
921-173B	108
921-174B	108
921-176B	107
921-177B	107
921-181B	229
921-182B	129
921-188B	128
921-189B	123A
921-191B	123A
921-195B	123A
921-196B	199
921-197B	159
921-198BX	184&185(CP)
921-200B	123A
921-202	229
921-202B	199
921-203B	132
921-204B	107
921-205B	199
921-206B	199
921-207	199
921-207B	199
921-208B	199
921-209B	199
921-210B	107
921-211B	107
921-212B	108
921-213B	107

To Be Replaced	ECG Replacement
921-214B	123A
921-215B	123A
921-216B	102A
921-217B	102A
921-222B	102A
921-223B	102A
921-224B	158
921-225B	123A
921-226B	107
921-227B	158
921-228B	123A
921-229B	123A
921-230B	192
921-231B	132
921-232B	107
921-233B	107
921-234B	123A
921-235B	107
921-236B	128
921-237B	123A
921-238B	102A
921-239B	199
921-240B	199
921-242B	158
921-243B	158
921-244B	158
921-246	123A
921-252B	123A
921-254B	159
921-255B	123A
921-256X	158
921-257B	107
921-258B	107
921-264B	229
921-265	229
921-265B	229
921-266	108
921-266B	108
921-267	108
921-267B	108
921-268B	123A
921-269B	123A
921-270B	129
921-272B	123A
921-273B	102A
921-274B	102A
921-275B	289
921-275R	123A
921-276B	123A
921-281B	199
921-282B	158
921-291	123A
921-291B	123A
921-292	159
921-292B	159
921-296B	159
921-301	229
921-301B	229
921-303B	123A
921-304B	123A
921-305B	123A
921-306B	123A
921-307	123A
921-307B	123A
921-308	159
921-308B	159
921-309	123A
921-309B	123A
921-312B	229
921-313B	108
921-314	123A
921-314B	123A
921-315B	129
921-318B	102A
921-319B	102A
921-321	123A
921-325B	108
921-326B	123A
921-327B	158
921-332B	159
921-333B	106
921-333P	106
921-334B	108
921-335B	108
921-336B	108
921-337B	128
921-338B	108
921-339B	123A
921-342B	177
921-345	123A
921-345B	123A
921-346	294
921-347	293
921-348	288
921-348B	159
921-349	229
921-349B	229
921-350B	229
921-351	123A
921-351B	123A
921-352B	123A
921-353	123A
921-353B	123A
921-354	123A
921-354B	123A
921-355	123A
921-355B	123A
921-360	123A
921-360B	123A
921-369	123A
921-379	229
921-382	268
921-383	269
921-389	287
921-403	172A

To Be Replaced	ECG Replacement
921-404	232
921-405	159
921-406	123A
921-407	199
921-408	199
921-410	297&298
921-411	238
921-412	287 & 288
921-428	108
921-429	291
921-430	292
921-431	152
921-432	153
921-433	153
921-434	152
921-1010	315
921-1013	289
921-1014	161
921-1016	159
921-1017	123A
921-1020	198
921-1022	199
921-1028	123A
921-1528	107
921-3558	123A
921HC	9921
923-1(RCA)	320
923-2(RCA)	320
923-3(RCA)	320
923-4(RCA)	320
923HC	9923
924-1(Large case)(SYL)	5452
924-1(SYL)	233
924-2(SYL)	5401
924-3(SYL)	5400
924-4(SYL)	5400
924-2209	172A
924-16598	102A
924-17945	121
926C193-1	123A
926C193-2	123A
926C193-P1M4165	123A
926C206P1	519
926HC	9926
927-1A(SYL)	128
927-1(SYL)	123A
927HC	9927
929C	199
929CA	199
929CU	199
929D(JVC)	199
929DX	199
929(O)	199
930-27B	109
930B	199
930C	199
930C613-P1	909
930C(Wards)	199
930D	199
930D(Wards)	199
930DC	9930
930DU	199
930DX	199
930DZ	107
930E	199
930E(JVC)	199
930E(Wards)	199
930EX	199
930(OV)	199
930PC	9930
930X1	123A
930X2	123A
930X3	123A
930X4	108
930X5	108
930X6	126
930X7	102A
930X8	102A
930X9	102A
930X10	102A
931	177
931DC	9931
931PC	9931
932DC	9932
932PC	9932
933-2(SYL)	504
933DC	9933
933PC	9933
935-1	123A
935DC	9935
935PC	9935
936-10	116
936-20	116
936DC	9936
936 NPN	184
936PC	9936
936PNP	185
937DC	9937
937PC	9937
938-3	283
939-12	177
940-1(SYL)	159
941-026-0001	177
941DC	9941
941PC	9941
941T1	176
942-002	754
942H2	1195
943-086	519
943-087	519
943-087-1	519
943-105-001	519
943-721-001	159
943-728-001	128
943-742-002	199

To Be Replaced	ECG Replacement
944-1(SYL)	100
944-2(SYL)	100
944DC	9944
944PC	9944
945	6400
945DC	9945
945PC	9945
946-1(SYL)	160
946-2(SYL)	160
946DC	9946
946PC	9946
947-1	123AP
947-1(SYL)	123AP
948-1(SYL)	160
948-2(SYL)	160
948-10300	5547
948DC	9948
948PC	9948
949-1(SYL)	108
949DC	9949
949PC	9949
950-1(SYL)	108
950DC	9950
950PC	9950
951-1(SYL)	126
951-2(SYL)	126
951DC	9951
951PC	9951
953-1(SYL)	198
955-1	160
955-1(SYL)	519
955-2	160
955-3	160
956-1(SYL)	515
957-7656-0	5400
958-023	159
959-1(SYL)	5400
961DC	9961
961PC	9961
962DC	9962
962PC	9962
963DC	9963
963PC	9963
964-1(RCA)	350
964-2(RCA)	350
964-3(RCA)	350
964-4(RCA)	350
964-2073B	123A
964-2209	172A
964-16598	126
964-16599	104
964-17142	102
964-17443	116
964-17444	123A
964-17887	104
964-17945	121
964-19862	102A&103A(CP)
964-19862A	102A
964-19863	102A
964-19864	102A
964-19865	116
964-20738	123A
964-20739	129
964-21866	116
964-22008	232
964-22009	172A
964-22158	192
964-24387	128
964-24584	123A
964-25046	128
964-27986	210
964-174443	116
965-1A6-5	160
965-2A6-1	103A
965-4A6-2	101
965A16-3	160
965B16-2	126
965C-16-4	121
965T1	102
966-1A6-3	102A
966-2A6-4	102A
966-3A6C	102A
970-1(SYL)	159
971-B6	282
972-0187-2	103A
972-659E-0	159
972-5360-0	199
972-6680-0	199
972-6680-1	199
972-8187-2	102A & 103A
972-9300-0	229
972D7	116
972X1	160
972X2	160
972X3	160
972X4	160
972X5	160
972X6	126
972X7	126
972X8	126
972X9	102A
972X10	102A
972X11	102A
972X12	102A
974-1(SYL)	157
974-2(SYLVANIA)	157
974-3	157
974-3A6-3	100
974-4(SYLVANIA)	157
974HC	9974
976-0036-921	177
977-1	177
977-2B	116
977-3B	125
977-4B	166
977-6B	166
977-8B	116
977-10B	116
977-11B	116
977-13B	116
977-14B	113
977-18B	116
977-19B	116
977-20B	116
977-22B	116
977-23B	116
977-24B	166
977-25B	116
977-27B	116
977-28B	116
977-33	521
977-34	523
977-35	523
977-36	526A
977-37	523
977-38	522
977-40	530
977-41	528
977-42	528
977-218	116(4)
977-64197	197
977A1-6-1	105
977B1-6-2	121MP
977C1-6-3	121MP
978-1923	129
984A-1-6B	121
987T1	102
988T1	102
989T1	102
990T1	102
991-00-1172	177
991-00-1172-1	177
991-00-1219	123A
991-00-1221	102A
991-00-1222	102A
991-00-1449	117
991-00-1449-1	117
991-00-2232	123A
991-00-2248	123A
991-00-2298	123A
991-00-2356	123A
991-00-2356/K	123A
991-00-2440	117
991-00-2440-1	117
991-00-2440-2	117
991-00-2873	123A
991-00-2888	128
991-00-3144	123A
991-00-3304	123A
991-00-7776	116
991-00-8393	123A
991-00-8393A	123A
991-00-8393M	123A
991-00-8394	123A
991-00-8394A	123A
991-00-8394AH	123A
991-00-8395	123A
991-01-0098	159
991-01-0099	121
991-01-0461	172A
991-01-0462	159
991-01-1216	121
991-01-1217	158
991-01-1219	123A
991-01-1220	123A
991-01-1221	102A
991-01-1222	102A
991-01-1223	102A
991-01-1224	102A
991-01-1225	159
991-01-1305	128
991-01-1306	123A
991-01-1312	123A
991-01-1314	128
991-01-1315	129
991-01-1316	107
991-01-1317	130
991-01-1318	123A
991-01-1319	159
991-01-1705	123A
991-01-1706	133
991-01-2328	159
991-01-2686	129
991-01-3044	123A
991-01-3055	133
991-01-3056	123A
991-01-3057	123A
991-01-3058	159
991-01-3063	130
991-01-3068	123A
991-01-3170	196
991-01-3543	172A
991-01-3544	123A
991-01-3599	159
991-01-3683	123A
991-01-3740	123A
991-01-5000	197
991-01-5001	196
991-01-5062	197
991-01-5063	196
991-010462	123A
991-011217	158
991-011219	123A
991-011220	123A
991-011221	160
991-011222	102A
991-011223	102A
991-011225	159
991-011305	128
991-011306	123A
991-011312	123A
991-011313	192
991-011314	128
991-011318	123A
991-011319	193
991-011576	133
991-011706	133
991-012328	234
991-012686	159
991-013056	123A
991-013057	199
991-013068	123A
991-015587	123A
991-015614	159
991-015615	123A
991-015663	172A
991-015942	754
991-015942-1	761
991-016274	123A
991-2P	129
991-3N	128
991T1	102
992-008-890	121MP
992-00271	130
992-00271A	130
992-00-1192	104
992-00-2271	130
992-002271	130
992-00-2298	123A
992-00-3139	130
992-00-3139A	130
992-00-3144	123A
992-003172	175
992-00-3172	124
992-004091	130
992-00-4091	130
992-00-4092	130
992-004092	130
992-00-4092	130
992-00-8870	121
992-00-8890	179
992-00-8890L	179
992-01-1216	121
992-01-1218	121
992-01-1317	130
992-01-3684	154
992-01-3705	175
992-01-3738	123A
992-02271	130
992-08890	121
992-017169	130
992-020054	243
992-1A6-1	105
992-10	116
992-531-01	166
992T1	102A
995-01-6130	153
995-01-6131	152
998-0061114	123A
998-0200816	123A
999-4601	128
1000-12	139A
1000-17	109
1000-25	703A
1000-129	116
1000-130	177
1000-131	109
1000-132	139A
1000-133	144A
1000-135	107
1000-136	123A
1000-137	123A
1000-138	152
1000-139	195A
1000-139*	195A
1000-140	299
1000-141	195A
1000-142	152
1001	102A
1001-0036/4460	720
1001-0036/5462	1142
1001-0091/4460	1140
1001-0091/5462	1140
1001-01	128
1001-02	123A
1001-02(Courier)	107
1001-03	123A
1001-04	123A
1001-05	123A
1001-06	123A
1001-07	195A
1001-08	237
1001-09	130
1001-0478	605
1001-5	5642
1001-6	5642
1001-10	109
1001-11	116
1001-12	139A
1001-13	601
1001-25(Lafayette)	703A
1001-7663	102
1001(EF Johnson)	9924
1001(GE)	712
1001H2(IC)	1127
1001H(IC)	1127
1001(Juliette)	123A
1002	234
1002-01	133
1002-02	229
1002-02A	108
1002-03	123A
1002-04	123A
1002-04-1	108
1002-05	102A
1002-07	1012
1002-08	109
1002-09	109
1002-0219	116
1002-17	109
1002-17(Diode)	109
1002-25	726
1002-68	229
1002-4404	142A
1002-6219	116(4)
1002-9296	601
1002-9668	144A
1002A-1	129
1002A-2	128
1002A(Juliette)	107
1002(GE)	748
1002(Squelch)	102A
1003	102A
1003-01	107
1003-02	1045
1003-0567	1196
1003-11	177
1003-13	116
1003-2084	5070A
1003-6754	199
1003(E.F. Johnson)	102A
1003(Juliette)	126
1004	123
1004-01	158
1004-02	195A
1004-03	123A
1004-0780	199
1004-0798	230
1004(2SC537)	123A
1004-17	108
1004(Diode)	109
1004(G.E.)	161
1004(Juliette)*	158
1004(Juliette)*	108
1004P	129
1005	123A
1005-02	195A
1005-03	123A
1005(2SC537)	123A
1005-3	123A
1005-17	102A
1005-20	116
1005 (Juliette Diode)	109
1005(JulietteRectifier)	116
1005(Juliette)*	102A
1005M19	159
1006-17	125
1006-21	123A
1006-24	116
1006-48	229
1006-78	160
1006-93	102A
1006-1737	145A
1006-5977	177
1006-5985	140A
1006-9292	109
1006(Diode)	109
1006(G.E.)	161
1006(JULIETTE RECT)	116
1006(Juliette)*	123A
1006(Juliette)*	102A
1007-0951	116
1007(2SB405)	158
1007-17	102A
1007-17(Diode)	109
1007-1124	110
1007-3054	229
1007-3062	229
1007-3070	289
1007-3088	229
1007-3153	289
1007-3211	123A
1007-3229	287
1007-3344	172A
1007(Juliette)*	126
1007(Juliette Diode)	109
1007(Juliette Rectifier)	116
1008	128
1008-02	123A
1008-17	104
1008-25	726
1008(E.F. Johnson)	102A
1008(Juliette)	131
1008(Power)	131
1009	102A
1009-01*	222
1009-02	123A
1009-02-16	123A
1009-03	195A
1009-03*	195A
1009-03-17	128
1009-04	237
1009-04-17	195A
1009-05	300
1009-05A	196
1009-06	138A
1009-07	177
1009-08	177
1009-09	116
1009-11	1016
1009-17	123A
1009-127	312
1009(E.F. Johnson)	102A
1009(G.E.)	161
1009(Juliette-Diode)	116
1009(Juliette-Rectifier)	116
1009(Sears)	102A
1010	140A
1010-14	195A
1010-17	191
1010-17(R.F.)	195A
1010(20A90)	110MP
1010-78	160
1010-87	160
1010-89	126
1010-143	177
1010-145	109
1010-7738	159
1010-7928	123A
1010-7936	196
1010-7985	165
1010-7993	128
1010-8025	165
1010-8033	159
1010-8041	128
1010-8066	233
1010-8082	123A
1010-8090	123A
1010-8116	506
1010-8132	5080A
1010-8165	177
1010-8173	110
1010-8355	177
1010-9478	513
1010-9485	116
1010-9486	116
1010-9494	116
1010-9932	738
1010-9940	712
1010-9965	783
1010-9973	790
1010A	519
1010(Diode)	177
1010(GE)	233
1010(Juliette)	116
1010(Zener)	140A
1011	109
1011-01	195A
1011-02	5071A
1011-0302	178
1011-11	191
1011-11(Focus)	118
1011-11(R.F.)	108
1011M57P01	129
1011M62P01	129
1011(VO-6C)	116
1012-17	109
1012-17(Power)	5874
1012(Diode)	116
1012(GE)	159
1012(IC)	1003
1013	109
1013-15	229
1013-16	102A
1013(E.F.Johnson)	159
1013(GE)	159
1014-25	703A
1014(Diode)	116
1014(E.F. Johnson)	102A
1014(Transistor)	102A
1015	145A
1015-15	229
1015(Transistor)	159
1016	234
1016-17	116
1016-77	109
1016-78	116
1016-79	116
1016-80	703A
1016-81	152
1016-83	108
1016-84	108
1016-85	313
1016(GE)	159
1018	154
1018-25	1056
1018-3259	177
1018-6963	116
1018-7474	506
1019-25	1021
1019-74	102A
1019-3852	123A
1019-6699	109
1020	116
1020-17	123A
1020-25	1075A
1020H	1160
1021-17	102
1021-25	1100
1022-5548	116
1023-17	102
1023G	123A
1023G(GE)	123A
1024	116
1024-17	104
1024G(GE)	123A
1025G(GE)	123A
1025G(GE)	199
1025H	1160
1025H(IC)	1160
1026G	123A
1026G(GE)	123A
1026(GE)	229
1027	146A
1027G	128
1027(G.E.)	108
1027G(GE)	128
1028G	123A
1028(G.E.)	123A
1028G(GE)	123A
1029G	123A
1029(G.E.)	123A
1029G(GE)	123A
1030	159
1030-17	109
1030-21	199
1030-25	7473
1030(G.E.)	165
1031-17	156
1031-25	7401
1031H	1245
1032	102
1032-25	1141
1032-3467	601
1032-3475	601
1032-3483	601
1032H	1170
1033	142A
1033-0911	177
1033-0983	177
1033-0991	177
1033-1	126
1033-2	126
1033-3	126
1033-4	126
1033-5	102
1033-6	103
1033-7	102
1033-8	116
1033-17	116
1033-1270	5404
1033-1916	109
1034	158
1034-17	123A
1034-43	101
1035	158
1035-80	199
1036	158
1037-65	199
1038-1	123A
1038-1-10	123A
1038-6	123A
1038-6CL	123A
1038-8	123A
1038-10	123A
1038-15	123A
1038-15CL	123A
1038-18	123A
1038-18CL	123A
1038-21	123A
1038-23	123A
1038-23CL	123A
1038-24	123A
1038-1697	116
1038-1721	116
1038-1788	506
1038-1804	1046
1038-1853	198
1038-1861	274
1038-9922	234
1038(G.E.)	128
1039-0060	290
1039-01	123A
1039-0433	186A
1039-0441	289
1039-0458	297
1039-0482	107
1039-0516	198
1039-0961	199
1039-1290	238
1040	116
1040-01	123A
1040-02	175
1040-03	123A
1040-04	195A
1040-05	237
1040-07	177
1040-08	109
1040-09	140A
1040-09(ZENER)	140A
1040-2	123A
1040-7	128
1040-10	116
1040-11	128
1040-59	160
1040-80	103A
1040-81	116
1040-155	123A
1040-9068	159
1040-9332	116
1040-9373	5081A
1041-63	116
1041-64	116
1041-65	109
1041-66	177
1041-67	138A
1041-68	1013
1041-69	1016
1041-70	132
1041-71	229
1041-72	123A
1041-73	123A
1041-74	152
1041-75	123A
1041-76	190
1041-77	195A
1041-109	116
1042-01	222
1042-02	133
1042-03	199
1042-04	123A
1042-05	289
1042-06	159
1042-07	123A
1042-08	235
1042-09	236
1042-3	109
1042-7	123A
1042-8	235
1042-10	226MP
1042-11	724
1042-12	109
1042-13	109
1042-14	178MP
1042-15	519
1042-16	177
1042-17	116
1042-18	139A
1042-19	5072A
1042-23	177
1042-7938	749
1042-8795	140A
1043-0049	177
1043-07	123A
1043-0615	123A
1043-10	177
1043-163	123AP
1043-164	123AP
1043-1195	222
1043-1229	289
1043-1260	289
1043-1278	129
1043-1286	152
1043-1294	153
1043-1301	185
1043-1302	184
1043-1310	185
1043-1328	184
1043-1336	185
1043-1344	722
1043-1534	142A
1043-1583	605
1043-7309	124
1043-7358	198
1043-7374	159
1043-7382	116
1044	116
1044-0295	159
1044-7049	1174
1044-8926	182
1044-8983	177
1044-9205	175
1044-9544	128
1045-0518	116
1045-0534	116
1045-2951	123A
1045-3082	128
1045-3579	159
1045-4445	506
1045-7034	116
1045-7737	165
1045-7802	177
1045-7828	152
1045-7836	153
1045-7844	130
1045-7851	130
1047-25	1052
1048-6421	177
1048-9839	5072A
1048-9854	142A
1048-9870	109
1048-9888	110
1048-9904	229
1048-9912	123A
1048-9920	199
1048-9938	614
1048-9946	116
1048-9953	601
1048-9987	177
1048-9995	116
1049-0035	294
1049-0050	229
1049-0060	229
1049-0092	199
1049-0100	199
1049-0167	293
1049-1744	123A
1049-3435	116
1050	116
1050-21	199
1050-64	116
1050G	159
1050(GE)	506
1051	506
1051(GE)	506
1052-17	102A
1052-6390	1161
1052-6408	1164
1052-6416	1173
1054-8295	513
1054-8766	123A
1057-17	102A
1057-2071	199
1058-2419	109
1059-2848	506
1059-7805	601
1059-7961	116
1059-9140	5074A
1060	116
1060-17	102A
1060-6564	294
1060-9428	287

@, * — See special notes on inside back cover.

To Be Replaced	ECG Replacement
1060-9543	613
1060-9568	142A
1060-9592	804
1060-9600	229
1060-9618	229
1060-9626	233
1060-9634	229
1060-9642	233
1061-6274	238
1061-6282	162
1061-6290	506
1061-8312	159
1061-8320	290
1061-8338	196
1061-8346	198
1061-8353	198
1061-8361	125
1061-8379	116
1061-8387	506
1061-8668	198
1061-8807	290
1061-8908	198
1061-8916	116
1061-8924	116
1061-9068	159
1061-9153	1128
1061-9161	1134
1061-9526	1200
1061-9666	1130
1061-9856	1133
1062-0615	108
1062-5069	601
1062-6018	159
1062-6414	294
1062-7511	165
1062GE	177
1063-79	116
1063-3485	233
1063-3493	229
1063-3501	123A
1063-3519	199
1063-3527	184
1063-3535	289
1063-3543	288
1063-3550	297
1063-3553	109
1063-3568	109
1063-3576	601
1063-3584	142A
1063-3592	1073
1063-3600	801
1063-3618	824
1063-4145	5071A
1063-4806	310
1063-4814	308
1063-4939	1175
1063-5019	797
1063-5142	171
1063-5209	147A
1063-5381	123A
1063-5423	159
1063-5431	159
1063-5449	159
1063-5646	292
1063-5688	291
1063-5704	198
1063-6454	5071A
1063-6926	159
1063-7916	171
1063-8369	162
1063-8435	234
1063-8591	109
1063-8963	289
1063-8971	125
1063-8989	137A
1064-4417	175
1064-6032	130
1064(G.E.)	712
1064(GE)	712
1065-2055	1173
1065-4861	7400
1065-6775	140A
1065-9928	116
1065-9936	198
1065-9944	175
1065(GE)	748
1067	154
1067(GE)	154
1068-17	237
1068-17A	224
1069(GE)	152
1070	125
1070-0623	125
1070-0631	198
1071-3642	130
1071-4913	289
1071(GE)	153
1072	193
1072K(GE)	193
1073	163A
1073-6486	290
1074	163A
1074-03	199
1074-24	109
1074-115	199
1074-116	186A
1074-117	223
1074-118	519
1074-119	116
1074-120	139A
1074-121	5076A
1074-122	5072A
1074-123	137A
1074-124	109

To Be Replaced	ECG Replacement
1074(GE)	163A
1074T	238
1075	233
1075BLUE(GE)	749
1075(GE)	749
1076-0999	294
1076-1377	161
1076-1484	177
1076-1559	154
1076-1674	125
1076-1963	199
1076-1971	293
1076-2842	199
1076-2854	199
1076-2862	109
1076-2870	801
1076-2888	1140
1076BLUE	749
1076(GE)	749
1077-07	123A
1077-2093	116
1077-2234	312
1077-2242	229
1077-2259	199
1077-2267	199
1077-2275	234
1077-2283	294
1077-2291	293
1077-2309	293
1077-2317	293
1077-2325	109
1077-2333	613
1077-2341	177
1077-2358	605
1077-2366	116
1077-2374	5402
1077-2382	1003
1077-2390	1006
1077-2408	1052
1077-2760	109
1077-3760	109
1077-3786	312
1077-3794	229
1077-3802	229
1077-3810	199
1077-3828	293
1077-3836	116
1077-3844	1218
1077(GE)	790
1079-01	177
1079-85	159
1079-89	177
1079(GE)	783
1079GREEN	783
1080	125
1080-01	229
1080-03	123A
1080-05	282
1080-06	186A
1080-07	289
1080-08	116
1080-10	139A
1080-20	123A
1080-21	199
1080-26	123A
1080-130	152
1080-5364	130
1080-6396	123A
1080 7584	128
1080G	129
1080G(GE)	193
1081-4739	903
1081-7104	223
1081K94-6	941
1081K94-7	909
1081K94-9	941
1082-1817	289
1082-2393	743
1084	125
1084-9784	159
1084(GE)	522
1085(GE)	522
1086(GE)	522
1087-01	299
1087-02	123A
1087 2380	128
1089 6199	159
1089-9307	912
1090	125
1091	5080A
1091(GE)	5080A
1092-16	177
1092(GE)	181
1095-01	312
1095J2F	116
1096-11	195A
1096-12	199
1096J2F	116
1097	783
1097-85	294
1097(GE)	186
1098-14	152
1098-15	195A
1100-75	195A
1100(GE)	187
1101	5063A
1101-8181	124
1101-9072	5526
1102	134A
1102-17	158

To Be Replaced	ECG Replacement
1102-17A	102A
1102-63	101
1102(Zener)	5005A
1103	134A
1103-88	116
1104	5009A
1104-94	102A
1104-95	103A
1104-96	116
1105	5011A
1105-15	121
1106	5014A
1106-29	116
1106-36	116
1106-97	108
1106-99	128
1107	5015A
1108	5016A
1108-73	116
1109	5018A
1109(GE)	196
1110	5019A
1110-86	116
1111	5020A
1111-17	160
1111-18	160
1111-504-08000	HiDiv-1
1111(GE)	152
1111P	1002
1112	5021A
1112-8	159
1112-78	128
1112-79	195A
1113	5023A
1113-03	123A
1113-13	160
1113-2875	102
1113(GE)	153
1115	165
1115-16	116
1115(GE)	165
1116	5026A
1116-42	116
1116-6527	130
1116-6535	128
1116(GE)	186
1117-76	116
1118	5027A
1118-17	109
1118-20	116
1119-17	109
1119-54	160
1119-55	160
1119-56	160
1119-57	102A
1119-58	103A
1119-59	102A
1119-4628	181
1119-8132	123A
1119(GE)	171
1120	5029A
1120-17	177
1120-18	116
1121-17	116
1122	5030A
1122-96	126
1123-55	108
1123-56	108
1123-57	108
1123-58	108
1123-59	108
1123-60	123A
1123-3335	175
1123(Juliette)	116
1124	121
1124A	121
1124B	121
1124C	104
1125(GE)	186
1127	146A
1127-2077	910
1128-17	102A
1129(GE)	712
1132-2(RCA)	184
1133	147A
1133-14	785
1136(GE)	783
1136GREEN	783
1137(GE)	790
1138	116
1138(GE)	728
1138RED(GE)	728
1139-17	116
1140-17	102A
1145	100
1145-17	102A
1146	100
1147-01	123A
1147-02	199
1147-03	294
1147-04	295
1147-05	235
1147-06	186A
1147-08	960
1147-09	4011B
1147-11	4029B
1147-13	177
1147-14	109
1147-15	116
1147-16	139A

To Be Replaced	ECG Replacement
1147-161	611
1147(GE)	159
1148-17	158
1151BLUE(GE)	749
1151(GE)	749
1152	234
1152BLUE(GE)	749
1152(GE)	749
1153(GE)	783
1153GREEN	783
1154(GE)	783
1154GREEN	783
1156	1194
1156(GE)	513
1156H	1194
1157	128
1164B	6026
1164D	6034
1164F	6040
1164(GE)	712
1164H	6042
1164K	6044
1165	712
1166-7821	102
1166(GE)	124
1170-01	125
1173(GE)	712
1174(GE)	749
1178-3453	102
1178(GE)	712
1179-0334	5529
1179(GE)	712
1180-0182	102
1183-17	195A
1184G	129
1184G(GE)	193
1186(GE)	159
1187	128
1187(GE)	192
1190	165
1192	102
1192(GE)	712
1193(GE)	712
1198(Harmon Kardon)	128
1203	5240A
1203-169	123A
1203(GE)	123A
1204	5242A
1204(GE)	128
1205	5244A
1205(GE)	123A
1206	5247A
1206-17	110MP
1206(GE)	128
1207	5248A
1207-17	109
1207(GE)	128
1208	5249A
1208(GE)	123A
1209	5251A
1210	5252A
1210-17	313
1210-17B	123A
1211	5253A
1212	5254A
1212-4	235
1212 (Ross)	177
1213	5255A
1214	159
1214-4	235
1217SK333	311
1224G	123A
1225G	123A
1226G	199
1227-17	123A
1227G	123A
1228	128
1228-17	123A
1228G	128
1229G	229
1229H	108
1230	123A
1230G	123A
1236-3750	159
1236-3776	123A
1239 5752	175
1241-719	126
1241A	102
1248	102A
1251-1-1	222
1254(GE)	159
1258	312
1260	312
1263A	116
1264(GE)	790
1269	184
1272	123A
1274	159
1277-17	102A
1278	749
1278(GE)	749

To Be Replaced	ECG Replacement
1284	108
1285(GE)	187
1294(GE)	159
1297	198
1300-1	128
1300A	128
1301-1	160
1301-2	160
1302	5111A
1303	5113A
1305	5117A
1306	5120A
1307	5121A
1307H	722
1308	5122A
1309	5124A
1310	5125A
1311	5126A
1312	5127A
1312(Transistor)	123A
1313	5129A
1314	159
1314(GE)	159
1315	123A
1316	123A
1316-17	102A
1317-17	102A
1320	102
1321	165
1321-4051	5995
1321-7724	102
1321-7732	102
1324	291
1326PC	739
1329	102
1330	102
1338	196
1339(GE)	181
1340	100
1341	234
1342	187
1344-3767	101
1344-7321	102
1345(GE)	186
1347	739
1347-17	102A
1348	739
1348A12H01	7417
1348A14H01	7476
1348A30H01	9930
1348A32H01	9932
1348A36H01	9936
1348A44H01	9944
1348A45H01	9945
1348A46H01	9946
1348A62H01	9962
1349-17	103A
1350	100
1351	738
1352	738
1353C	1246
1358GE	186
1360	102
1362-17	102A
1362-17A	102A
1364-17	102A
1368C/D	123A
1369-6	815
1371	513
1371-17	103A
1373-17	233
1373-17A	107
1373-17AL	108
1374-17	289
1374-17A	289
1374-17AC	123A
1376-001	5697
1376-002	5697
1380C	1196
1384(GE)	196
1385(GE)	197
1390	100
1396	101
1399-3	1129
1400	100
1402E	123A
1404	233
1405-17	116
1410	100
1410-102	519
1410-102(Rogers)	117
1410-167	116
1410-169	519
1410-169(Rogers)	177
1410-171	109
1411-130	138A
1411-134	5188A
1411-135	142A
1411-136	140A
1411-137	5071A
1412	123A
1412-1	123A
1412-1-12	123A
1412-1-12-8	123A
1412-170	116
1412-177	5414
1412-182	5802
1412-190	5802(4)
1413	123A
1413-159	105
1413-160	102A
1413-168	121
1413-172	121
1413-175	158
1413-178	121

To Be Replaced	ECG Replacement
1414	199
1414-157	128
1414-158(Rogers)	159
1414-173	128
1414-174	123A
1414-176	159
1414-179	130
1414-180	175
1414-183	123A
1414-184	128
1414-185	129
1414-186	128
1414-187	129
1414-188	130
1414-189	128
1414A	121
1414A-12	121
1414A-12-8	121
1415	123A
1416	128
1417	229
1417-177	105
1418	123A
1420-1-1	107
1420-2-2	161
1424	123A
1428	129
1431-7184	181
1431 8349	123A
1434	291
1436-17	102A
1448	749
1449	160
1451	790
1455-7-4	107
1458	778
1458CP1	778
1458P1	778
1458PJ	778
1459	102
1461	738
1461(GE)	7493A
1462	74123
1463	123A
1465	123A
1465-1	160
1465-1-12	160
1465-1-12-8	160
1465-2	103A
1465-2-12	103A
1465-2-12-8	103A
1465-4	101
1465-4-12	101
1465-4-12-8	101
1465A	160
1465A-12	160
1465A-12-8	160
1465B	126
1465B-12	126
1465B-12-8	126
1465C	121
1465C-12	121
1465C-12-8	121
1466-1	102A
1466-1-12	102A
1466-1-12-8	102A
1466-2	102A
1466-2-12	102A
1466-2-12-8	102A
1466-3	102A
1466-3-12	102A
1466-3-12-8	102A
1471-4356	9936
1471-4364	9946
1471-4372	9962
1471-4380	9930
1471-4398	9944
1471-4406	910
1471-4414	726
1471-4729	5995
1471-4778	123A
1471-4802	130
1471-9860	9936
1472 8349	199
1473	159
1473-4255	128
1474-3	100
1474-3-12	100
1474-3-12-8	100
1474-3736	911
1476-17	102A
1476-17-6	102A
1476 1118	128
1477-3352	906
1477-3436	904
1477A	105
1477A-12	105
1477A-12-8	105
1477B	121MP
1477B-12	121MP
1477B-12-8	121MP
1477C	121MP
1477C-12	121MP
1477C-12-8	121MP
1478-6982	9112
1479-0224	9937
1479-0240	74H00
1479-0257	74H21
1479-0265	74H20
1479-0273	941
1479 7963	199
1479-7971	74H04
1479 7989	123A
1479-8011	923
1479-8029	159

To Be Replaced	ECG Replacement
1481	159
1482	123A
1482-17	195A
1483	128
1484A	121
1484A-12	121
1484A-12-8	121
1485-9896	9135
1486	152
1486-8780	74H10
1487	154
1487-17	195A
1488B	160
1488B-12	160
1488B-12-8	160
1488C	100
1488C-12	100
1488C-12-8	100
1488(Sears)	116
1489-17	109
1492-1	105
1492-1-12	105
1492-1-12-8	105
1493	159
1493-17	123A
1494	159
1501	229
1502	123A
1502B	229
1502D	229
1505-9850	124
1507-7183	175
1510-2718	102
1512	109
1515(NPN)	199
1515(PNP)	101
1519	154
1521B	218
1522	790
1524	123
1526	160
1527-5282	9932
1527-5308	9945
1534-8931	175
1540	123A
1540(GE)	7475
1542	74145
1543-00	519
1548-17	175
1550	109
1550-17	143A
1553-17	159
1559	5634
1559-17	121
1559-17A	121
1561-0408	181
1561-0410	181
1561-0608	181
1561-0610	181
1561-0615	181
1561-0808	181
1561-0810	181
1561-0815	181
1561-17	121
1561-1008	181
1561-1010	181
1561-1015	181
1562	116
1567	123A
1567-0	123A
1567-2	123A
1572	1196
1573-00	128
1573-01	128
1573PQ	287
1574-01	234
1582	159
1585H	107
1607A80	7406
1609	165
1611-17	116
1612SK24E	133
1615C	113
1616C	114
1617C	115
1618	152
1627-1413	9110
1627 1843	177
1627-2064	9093
1631	123A
1634-17	313
1634-17-14A	108
1673-0475	128
1674-17	116
1676-1991	128
1677-1149	923D
1678	235
1679 7391	159
1687-17	107
1699-17	177
1700-5182	903
1703-8662	519
1705-4834	123A
1705-5351	128
1710	289
1711	123A
1711-17	123A
1711MC	123A
1712-17	123A
1713-17	116
1714-0402	175
1714-0602	175
1714-0605	175
1714-0802	175
1714-0805	175

To Be Replaced	ECG Replacement
1714-1002	175
1714-1005	175
1718	612
1721-0725	218
1723-0405	327
1723-0410	327
1723-0605	327
1723-0610	327
1723-0805	327
1723-0810	327
1723-17	123A
1723-1005	327
1723-1010	327
1723-1205	327
1723-1210	327
1723-1405	327
1723-1410	327
1723-1605	327
1723-1610	327
1723-1805	181
1723-1810	181
1729-7284	923
1741-0051	7400
1741-0069	74H00
1741-0085	7401
1741-0119	7402
1741-0143	7404
1741-0150	74H04
1741-0176	7405
1741-0184	74H05
1741-0200	7408
1741-0234	7410
1741-0242	74H10
1741-0275	74H11
1741-0291	7417
1741-0325	7420
1741-0333	74H20
1741-0366	74H22
1741-0416	7430
1741-0424	74H30
1741-0440	7437
1741-0473	7440
1741-0481	74H40
1741-0564	7451
1741-0572	74H51
1741-0598	7453
1741-0606	74H53
1741-0622	7454
1741-0630	74H54
1741-0663	74H55
1741-0689	7460
1741-0697	74H60
1741-0721	74H74
1741-0747	7475
1741-0770	7483
1741-0804	7486
1741-0895	7493A
1741-0952	7495
1741-1018	74107
1741-1042	74150
1741-1075	74151
1741-1133	7411
1741-1190	7441
1741-1224	7442
1741-1257	74121
1741-1299	74H21
1741-1323	74H183
1741-1349	74180
1741-1380	74H52
1743-0610	327
1743-0630	327
1743-0820	327
1743-1010	327
1743-1030	327
1743-1220	327
1743-1410	327
1743-1420	327
1743-1430	327
1743-1620	327
1750-103	177
1751-17	199
1751G036	123A
1755A	138A
1755A-F	138A
1756-17	177
1761-17	108
1763-0415	181
1763-0420	181
1763-0425	181
1763-0615	181
1763-0620	181
1763-0625	181
1763-0815	181
1763-0825	181
1763-1015	181
1763-1020	181
1763-1025	181
1763-1215	181
1763-1220	181
1763-1225	181
1763-1415	181
1763-1420	181
1763-1425	181
1766	142A
1777-17	102A
1778-17	109
1789-17	128
1792-17	108
1794-17	139A
1799-17	123A
1800	9924
1800-17	123A
1800DC	9800
1800PC	9800
1801	161

To Be Replaced	ECG Replacement
1801DC	9801
1801PC	9801
1802DC	9802
1802PC	9802
1803DC	9803
1803PC	9803
1804	754
1804-17	154
1804DC	9804
1804PC	9804
1805	7401
1805DC	9805
1805PC	9805
1806	7404
1806-17	130
1806-17A	130
1806DC	9806
1806PC	9806
1807	7442
1807DC	9807
1807PC	9807
1808	7490
1808DC	9808
1808PC	9808
1809DC	9809
1809(Diode)	177
1809(IC)	754
1809PC	9809
1810DC	9810
1811-110-10111	112
1811-110-10118	119
1811-110-10191	118
1811DC	9811
1811PC	9811
1812-1	123A
1812-1-12	123A
1812-1-127	123A
1812-1L	123A
1812-1L8	123A
1812DC	9812
1812PC	9812
1813-0015	109
1813DC	9813
1813PC	9813
1814A	121
1814A-12	121
1814A-127	121
1814AL	121
1814AL-8	121
1814DC	9814
1814PC	9814
1818	177
1818(I.C.)	754
1820-0047	903
1820-0051	703A
1820 0052	9923
1820-0054	7400
1820-0055	7490
1820-0058	909
1820-0063	7451
1820-0065	7470
1820-0068	7410
1820-0069	7420
1820-0070	7430
1820-0071	7440
1820-0072	7450
1820-0074	7454
1820-0075	7473
1820-0077	7474
1820-0084	7453
1820-0085	7460
1820-0087	9950
1820-0088	9951
1820-0094	9946
1820-0095	9948
1820-0096	9932
1820-0099	7493A
1820-0100	7441A
1820-0104	1171
1820-0122	9093
1820-0125	911
1820-0128	9937
1820-0137	724
1820-0138	5874
1820-0141	74H08
1820-0174	7404
1820-0175	7405
1820-0192	901
1820-0196	923
1820-0204	74H11
1820-0216-1	941M
1820-0217-1	941M
1820-0218	5454
1820-0223	1171
1820-0233	74193
1820-0238	9810
1820-0240	906
1820-0248	909
1820-0256	9158
1820-0257	9157
1820-0258	9099
1820-0259	9935
1820-0261	74121
1820-0269	7403
1820-0270	923
1820-0273	9806
1820-0274	9808
1820-0281	74107
1820-0282	7486
1820-0288	9662
1820-0297	900
1820-0301	7475
1820-0304	7472
1820-0306	724

To Be Replaced	ECG Replacement
1820-0307	9936
1820-0310	9962
1820-0323	9989
1820-0324	9924
1820-0326	908
1820-0327	7401
1820-0328	7402
1820-0341	9094
1820-0346	9936
1820-0348	9944
1820-0349	9949
1820-0351	9963
1820-0352	904
1820-0362	7480
1820-0363	7482
1820-0364	7491
1820-0366	7494
1820-0367	7495
1820-0368	7496
1820-0370	74H00
1820-0371	74H01
1820-0372	74H11
1820-0373	74H21
1820-0375	74H30
1820-0376	74H40
1820-0377	74H50
1820-0378	74H51
1820-0379	74H52
1820-0380	74H53
1820-0381	74H54
1820-0382	74H55
1820-0383	74H60
1820-0384	74H61
1820-0385	74H62
1820-0386	74H71
1820-0387	74H72
1820-0391	74H73
1820-0398	910D
1820-0411	9917
1820-0418	9812
1820-0424	74H04
1820-0427	793
1820-0430	309K
1820-0435	74180
1820-0439	718
1820-0441	9801
1820-0451	74S113
1820-0454	9805
1820-0468	7475
1820-0469	74H102
1820-0471	7406
1820-0474	726
1820-0476	915
1820-0477	975
1820-0479	9935
1820-0491	74145
1820-0493	976
1820-0495	7411
1820-0511	7408
1820-0512	74H74
1820-0513	7409
1820-0514	7426
1820-0516	9112
1820-0538	7423
1820-0539	7437
1820-0544	74H103
1820-0545	7419a
1820-0546	74192
1820-0577	7416
1820-0579	74123
1820-0605	74H01
1820-0606	74181
1820-0609	745114
1820-0611	74132
1820-0613	74H05
1820-0615	9931
1820-0618	7417
1820-0619	74H22
1820-0620	74153
1820-0621	7438
1820-0628	7489
1820-0631	74H108
1820-0640	74150
1820-0655	7425
1820-0661	7432
1820-0665	9814
1820-0668	7407
1820-0681	74S00
1820-0682	74S03
1820-0686	74S11
1820-0687	74S15
1820-0688	74S20
1820-0689	74S22
1820-0690	74S40
1820-0691	74S64
1820-0692	74S65
1820-0693	74S74
1820-0694	74S86
1820-0695	74S113
1820-0696	74S114
1820-0697	74S14C
1820-0704	74122
1820-0707	74141
1820-0713	74163
1820-0715	74H106
1820-0716	74161
1820-0726	74199
1820-0734	74190
1820-0738	74155
1820-0739	74H101
1820-0740	74H87
1820-0744	7497
1820-0751	74196
1820-0752	74H76
1820-0765	74197

To Be Replaced	ECG Replacement
1820-0782	7427
1820-0788	74174
1820-0839	74175
1820-0841	74H86
1820-0844	4025B
1820-0847	74H183
1820-0861	9946
1820-0862	9948
1820-0863	9158
1820-0864	7403
1820-0865	9944
1820-0866	9949
1820-0869	9935
1820-0870	7408
1820-0894	7404
1820-0899	74160
1820-0910	74LS83
1820-0921	7485
1820-0927	4028B
1820-0931	4029B
1820-0933	4017B
1820-0935	4020B
1820-0936	4024B
1820-0937	4040B
1820-0938	4027B
1820-0939	4013B
1820-0942	4000
1820-0943	4023B
1820-0946	4001B
1820-0947	4030B
1820-0948	4002B
1820-0949	4011B
1820-0950	4012B
1820-0951	4019B
1820-0958	4042B
1820-0961	4021B
1820-0965	9800
1820-0970	4014B
1820-0976	4015B
1820-0978	4007B
1820-0979	4049B
1820-0981	4016B
1820-0995	7447
1820-0998	74S153
1820-1004	7404
1820-1006	164
1820-1015	74S158
1820-1032	74198
1820-1037	7446
1820-1038	7448
1820-1042	74165
1820-1046	74156
1820-1053	7414
1820-1056	74132
1820-1064	74164
1820-1068	74H30
1820-1074	74128
1820-1076	74S174
1820-1077	74S157
1820-1107	74166
1820-1110	722
1820-1111	7440
1820-1112	74LS74
1820-1116	74109
1820-1124	7433
1820-1130	74S133
1820-1145	4049B
1820-1146	4050B
1820-1158	74S51
1820-1164	74H106
1820-1172	7416
1820-1184	7425
1820-1185	74162
1821-0001	912
1821-0002	912
1826-0009	925
1826-0010	923
1826-0044	725
1826-0055	911D
1826-0070	941D
1826-0075	914
1826-0166	910
1827-17	102A
1835-17	199
1840-17	131
1841-17	123A
1843-17	161
1844-17	159
1845-17	161
1846-17	177
1848-17	116
1849	116
1849R	116(2)
1850	116
1850-0003	160
1850-0006	101
1850-0017	102
1850-0019	100
1850-0020	160
1850-0021	105
1850-0027	160
1850-0031	102
1850-0032	102A
1850-0037	160
1850-0040	102
1850-0040-1	102
1850-0041	160
1850-0047	100
1850-0048	102
1850-0049	102
1850-0051	126
1850-0052	100
1850-0054	102
1850-0060	102
1850-0062	102

To Be Replaced	ECG Replacement
1850-0062-1	102
1850-0064	176
1850-0065	102
1850-0066	160
1850-0067	160
1850-0070	102
1850-0073	126
1850-0074	126
1850-0075	160
1850-0082	121
1850-0087	121
1850-0090	176
1850-0091	160
1850-0093	126
1850-0094	121
1850-0095	121
1850-0096	160
1850-0099	160
1850-0101	102
1850-0103	160
1850-0108	105
1850-0109	102
1850-0110	126
1850-0111	102
1850-0112	102A
1850-0113	100
1850-0114	121
1850-0119	160
1850-0124	102
1850-0126	121
1850-0127	100
1850-0129	121
1850-0132	120
1850-0137	160
1850-0139	102
1850-0140	5483
1850-0145	102A
1850-0146	104
1850-0150	1-5
1850-0151	100
1850-0154	102
1850-0158	160
1850-0160	104
1850-0166	160
1850-0170	102
1850-0172	160
1850-0173	158
1850-0178	176
1850-0180	102
1850-0182	102
1850-0184	102
1850-0184-1	102
1850-0185	121
1850-0190	104
1850-0192	121
1850-0194	105
1850-0195	105
1850-0199	160
1850-0200	102
1850-0402	104
1850-0403	121
1850-0404	158
1850-0405	121
1850-0406	104
1850-0412	102
1850-0416	126
1850-0417	100
1850-0418	100
1850-0419	102
1850-0437	121
1850-0438	160
1850-17	159
1850-1098	213
1850R	116
1851-0017	101
1851-0025	101
1851-0031	101
1851-0034	101
1851-0038	101
1851-0041	103A
1851-17	117
1852-17	108
1853-0001-1	159
1853-0006	129
1853-0007	159
1853-0008	159
1853-0012	129
1853-0013	129
1853-0014	106
1853-0015	159
1853-0016	159
1853-0019	159
1853-0023	159
1853-0029	159
1853-0031	219
1853-0033	159
1853-0036	159
1853-0039	159
1853-0041	129
1853-0045	129
1853-0046	159
1853-0051	129
1853-0057	159
1853-0058	159
1853-0059	219
1853-0062	129
1853-0066	159
1853-0069	106
1853-0071	129
1853-0072	106
1853-0076	106
1853-0077	159
1853-0081	159
1853-0084	185
1853-0086	159

To Be Replaced	ECG Replacement
1853-0089	159
1853-0098	159
1853-0100	159
1853-0204	185
1853-0205	159
1853-0206	129
1853-0212	185
1853-0213	129
1853-0215	129
1853-0222	185
1853-0223	218
1853-0236	185
1853-0258	106
1853-0264	288
1853-0280	185
1853-0281	159
1853-0285	159
1853-0310	180
1853-0311	219
1853-0314	139A
1853-0320	129
1853-0322	159
1853-0323	218
1853-0327	159
1853-0328	162
1853-0340	180
1853-0344	285
1853-0349	128
1853-0351	244
1853-0362	244
1854-0003	123A
1854-0004	108
1854-0005	123A
1854-0006	108
1854-0009	108
1854-0010	108
1854-0011	123A
1854-0013	123
1854-0017	108
1854-0021	108
1854-0022-1	128
1854-0027	123A
1854-0029	108
1854-0032	123A
1854-0033	123A
1854-0036	123A
1854-0039	128
1854-0048	316
1854-0050	108
1854-0053	123
1854-0057	107
1854-0063	181
1854-0064	123A
1854-0066	123A
1854-0067	128
1854-0072	175
1854-0076	121
1854-0081	123A
1854-0084	130
1854-0087	123A
1854-0090	128
1854-0090-1	128
1854-0092	229
1854-0093	123A
1854-0094	123A
1854-0098	123A
1854-0099	123A
1854-0201	123A
1854-0202	123A
1854-0203	123A
1854-0209	128
1854-0210	123A
1854-0211	123A
1854-0212	128
1854-0215	123A
1854-0216	286
1854-0217	284
1854-0218	123A
1854-0219	107
1854-0233	311
1854-0234	124
1854-0237	124
1854-0238	108
1854-0242	128
1854-0245	181
1854-0246	123A
1854-0252	130
1854-0255	128
1854-0259	175
1854-0260	108
1854-0263	128
1854-0264	130
1854-0265	175
1854-0274	128
1854-0278	123A
1854-0281	128
1854-0282	286
1854-0287	123A
1854-0301	123A
1854-0304	123A
1854-0311	124
1854-0313	181
1854-0315	108
1854-0323	316
1854-0324	124
1854-0325	316
1854-0327	123A
1854-0332	128
1854-0345	316
1854-0352	282
1854-0353	123A
1854-0363	282
1854-0365	154
1854-0368	184
1854-0370	152

To Be Replaced	ECG Replacement
1854-0371	123A
1854-0378	278
1854-0379	124
1854-0382	280
1854-0384	154
1854-0387	199
1854-0389	184
1854-0390	161
1854-0392	199
1854-0397	108
1854-0398	181
1854-0399	175
1854-0409	123A
1854-0417	107
1854-0418	229
1854-0431	316
1854-0432	123A
1854-0438-1	124
1854-0453	184
1854-0454	196
1854-0467	123A
1854-0474	287
1854-0476	159
1854-0478	311
1854-0490-1	181
1854-0498	128
1854-0519	181
1854-0534	163A
1854-0556	128
1854-0563	130
1854-0570	282
1854-0572	283
1854-0576	181
1854-0577	284
1854-0590	175
1854-0600	175
1854-0611	243
1854-0623	283
1854-0624	283
1854-0637	123A
1854-0643	124
1854-17	116
1854-SRK1-1	199
1855-0005	133
1855-0010	6401
1855-0027	6409
1855-0040	132
1855-0055	133
1855-0081	312
1855-0099	6409
1855-0204	6409
1855-0305	133
1855-0306	220
1855-0314	6402
1855-0327	133
1855-0332	133
1855-0357	220
1855-17	116
1858	101
1858-0004	906
1858-0019	917
1858-0023	916
1858A	139A
1859-14	121
1859-16	121
1859-17	132
1859R	116
1865-1	160
1865-1-12	160
1865-1-127	160
1865-1L	160
1865-2	103A
1865-2-12	103A
1865-2L	103A
1865-2L8	103A
1865-4	101
1865-4-12	101
1865-4-127	101
1865-4L	101
1865-4L8	101
1865A	160
1865A-12	160
1865A-127	160
1865AL8	160
1865B	126
1865B-12	126
1865B-127	126
1865BL	126
1865BL8	126
1865C	121
1865C-12	121
1865C-127	121
1865CL	121
1865CL8	121
1866-1	102A
1866-1-12	102A
1866-1-127	102A
1866-1L	102A
1866-1L8	102A
1866-2	102A
1866-2-12	102A
1866-2-127	102A
1866-2L	102A
1866-2L8	102A
1866-3	102A
1866-3-12	102A
1866-3-127	102A
1866-3L	102A
1866-3L8	102A
1866-17	123A
1867-17	159
1872-3	506
1872-6	177
1874-3	100
1874-3-12	100

To Be Replaced	ECG Replacement
1874-3-127	100
1874-3L	100
1874-3L8	100
1877A	105
1877A-12	105
1877A-127	105
1877AL	105
1877AL8	105
1877B	121MP
1877B-12	121MP
1877B-127	121MP
1877BL	121MP
1877BL8	121MP
1877C	121MP
1877C-12	121MP
1877C-127	121MP
1877CL	121MP
1877CL8	121MP
1879-17	123A
1879-17A	128
1880-17	108
1881-17	108
1882-17	123A
1883-17	123A
1884-0002	5523
1884-0010	5483
1884-0015	5524
1884-0016	5527
1884-0022	5485
1884-0027	5481
1884-0028	5483
1884-0051	5504
1884-0066	160
1884-0074	5400
1884-0080	5695
1884-0082	5442
1884-0088	5511
1884-0091	6404
1884-0201	5401
1884-0209	5695
1884-0211	5529
1884-0213	5442
1884-0218	5697
1884-0219	5547
1884-17	123A
1884A	121
1884A-12	121
1884A-127	121
1884AL	121
1884AL8	121
1885-17	154
1885-17(Rect.)	116
1888B	160
1888B-12	160
1888B-127	160
1888BL	160
1888BL8	160
1888C	100
1888C-12	100
1888C-127	100
1888CL	100
1888CL8	100
1889-17	129
1890-17	108
1892-1	105
1892-1-12	105
1892-1-127	105
1892-1L	105
1892-1L8	105
1893-17	123A
1900-0004	109
1900-0005	112
1900-0006	5077A
1900-0009	5071A
1900-0020	109
1901-0002	5872
1901-0005	116
1901-0028	5804
1901-0032	5942
1901-0036	5804
1901-0045	5802
1901-0048	5944
1901-0057	5832
1901-0058	177
1901-0059	177
1901-0060	5834
1901-0061	5070A
1901-0062	116
1901-0071	177
1901-0129	116
1901-0132	177
1901-0151	5868
1901-0164	5802
1901-0305	5990
1901-0306	5991
1901-0307	6154
1901-0308	6155
1901-0309	5860
1901-0310	5986
1901-0312	6354
1901-0314	5882
1901-0316	5981
1901-0317	5982
1901-0318	5987
1901-0319	5987
1901-0320	5988
1901-0321	5989
1901-0332	6154
1901-0333	6354
1901-0334	6354
1901-0335	6354
1901-0338	6354
1901-0346	5943
1901-0383	5850
1901-0388	5804

To Be Replaced	ECG Replacement
1901-0389	5804
1901-0398	5852
1901-0409	5800
1901-0410	5801
1901-0412	5804
1901-0414	5806
1901-0421	5940
1901-0422	5946
1901-0423	5948
1901-0425	116
1901-0491	5808
1901-0492	5808
1901-0493	5809
1901-0494	5809
1901-0536	6155
1901-0557	905
1901-0578	5893
1901-0655	6155
1901-0678	5869
1901-0684	5868
1901-0693	506
1901-1011	907
1901-1052	519
1901-1058	5986
1901-1065	506
1902-0003	5071A
1902-0011	137A
1902-0018	141A
1902-0028	5212A
1902-0030	5080A
1902-0033	137A
1902-0035	5223A
1902-0039	5197A
1902-0088	5217A
1902-0089	5219A
1902-0094	5009A
1902-0095	5005A
1902-0105	5009A
1902-0156	5198A
1902-0166	5198A
1902-0178	5219AK
1902-0183	5208B
1902-0193	5090A
1902-0205	5036A
1902-0245	5071A
1902-0246	5074A
1902-0315	5980
1902-0509	137A
1902-0522	5118B
1902-0549	5143A
1902-0569	141A
1902-0625	137A
1902-0630	138A
1902-0631	5129A
1902-0632	5183B
1902-0680	137A
1902-0686	137A
1902-0759	5195A
1902-0761	137A
1902-0772	5027A
1902-0777	5203A
1902-0785	5030A
1902-0786	5033A
1902-0787	5036A
1902-0791	5042A
1902-0792	5047A
1902-0793	5050A
1902-0795	147A
1902-1169	138A
1902-1170	5072A
1902-1171	5073A
1902-1172	139A
1902-1173	140A
1902-1174	142A
1902-1175	143A
1902-1176	144A
1902-1177	145A
1902-1178	5075A
1902-1179	5076A
1902-1180	5077A
1902-1181	5078A
1902-1182	5079A
1902-1183	5080A
1902-1184	5081A
1902-1185	5032A
1902-1194	5190B
1902-1195	5202A
1902-1196	5098A
1902-1198	5185A
1902-1199	5186A
1902-1200	5192A
1902-1201	5180AK
1902-1203	5186AK
1902-1213	5089A
1902-1215	5196A
1902-1218	5205A
1902-1225	5182AK
1902-1229	5191A
1902-1244	5086A
1902-1245	136A
1902-1246	5021A
1902-1259	5135A
1902-1278	5077A
1902-1286	5120A
1902-1288	5136A
1902-1290	5162A
1902-1291	5116A
1902-1292	5150A
1906-17	103A
1907-6553	941D
1910-0002	178
1910-0014	109
1910-0023	109
1910-0024	109
1910-0025	177

To Be Replaced	ECG Replacement
1910-0033	109
1910-0041	109
1911-0001	116
1912-0002	5896
1915-17	123A
1916-17	195A
1917-17	102A
1919-17	102A
1919-17A	102A
1920-1204	5196A
1923-17	108
1923-17-1	108
1925-17	229
1929-17	123A
1931-17	107
1931-17A	108
1932-17	123A
1932A	140A
1933-17	128
1934-17	132
1935-17	234
1936-17	175
1937-17	103A
1937-17(Diode)	177
1940-17	159
1941-17	116
1945-17	131
1946-17	102A
1947-17	110
1948-17	507
1949-17	116
1950-17	116
1951-17	126
1952-17	161
1954-17	102A
1955-17	131
1956-17	109
1958-17	103A
1960-17	102A
1961-17	123A
1966-17	123A
1966B	5075A
1968-17	152
1969-17	152
1970-16	116
1970-17	116
1971-17	125
1972-17	128
1973-17	102A
1974-17	102A
1977-17	109
1979-808-10	159
1980-17	109
1981-17	177
1982-17	116
1983-17	108
1984-17	123A
1998-17	107
1999	123A
1999-17	107
2000-001	1198
2000-002	4011B
2000-004	977
2000-005	1194
2000-006	1195
2000-007	1082
2000-008	977
2000-009	973D
2000-010	1204
2000-011	1204
2000-016	1247
2000-017	1192
2000-019	1082
2000-020	977
2000-021	1198
2000-022	973D
2000-023	4007B
2000-024	1195
2000-025	1194
2000-026	1204
2000-027	4027B
2000-028	4011B
2000-029	1262
2000-031	1249
2000-032	1192
2000-101	312
2000-102	222
2000-103	222
2000-104	133
2000-105	312
2000-106	312
2000-107	312
2000-108	312
2000-201	290
2000-202	129
2000-203	289
2000-204	233
2000-205	229
2000-206	295
2000-207	295
2000-208	235
2000-209	128
2000-210	123A
2000-211	236
2000-212	236
2000-213	229
2000-214	316
2000-215	315
2000-216	152
2000-218	294
2000-219	152
2000-220	152
2000-221	130
2000-222	290
2000-223	123A

To Be Replaced	ECG Replacement
2000-224	229
2000-225	235
2000-226	295
2000-228	229
2000-229	289
2000-230	159
2000-231	152
2000-233	123A
2000-234	123A
2000-235	199
2000-236	294
2000-238	186
2000-239	519
2000-240	107
2000-241	295
2000-242	236
2000-243	229
2000-245	199
2000-247	295
2000-249	235
2000-251	186A
2000-252	130
2000-253	229
2000-301	109
2000-302	519
2000-303	519
2000-304	116
2000-305	139A
2000-308	139A
2000-309	116
2000-311	138A
2000-312	5075A
2000-313	135A
2000-317	519
2000-318	109
2000-318(President)	109
2000-319	519
2000-320	116
2000-321	135A
2000-322	137A
2000-323	177
2000-324	138A
2000-325	138A
2000-326	5075A
2000-327	139A
2000-328	137A
2000-329	137A
2000-330	5312
2000-332	519
2000-333	135A
2000-334	139A
2000-335	605
2000-337	109
2000-338	5067A
2000-339	601
2000-340	5070A
2000-341	610
2000-342	605
2000-344	613
2000-345	177
2000-346	109
2000-348	156
2001-17	123A
2001 (E.F. Johnson)	152
2001(TRANSISTOR)	152
2002	121
2002-2	717
2002 (E.F. Johnson)	121
2003	130
2003-5	968
2003-17	123A
2003JDP1	128
2004-01	107
2004-02	229
2004-03	123A
2004-04	123A
2004-05	123A
2004-06	159
2004-14	123A
2004-67	177
2004-70	4011B
2004(EFJohnson)	726
2004(Transistor)	102A
2005	121
2005-1	712
2005-2	712
2005-2981	519
2006	123A
2006-1	722
2006-2	722
2006-17	5022A
2007-01	121
2007-1	708
2007-2	708
2007-3	708
2008	175
2008-1	725
2008-2	725
2008-17	123A
2009	105
2010	105
2010-01	177
2010-02	116
2010-03	177
2010-10	519
2010-5409	912
2010(Rect.)	5914
2011	184
2012	102
2012-5472	923
2012 (E.F. Johnson)	102
2013(E.F.Johnson)	103A
2014-6684	941
2015	160
2015-00	126

To Be Replaced	ECG Replacement
2015-1	130
2015-1A	130
2015-2	130
2015-2A	130
2015-3	130
2015-3A	130
2015-4	130
2015-5	130
2015-6	130
2015-7	130
2015(Rect)	5914
2017-107	159
2017-108	186A
2017-109	152
2017-110	154
2017-111	601
2017-113	5071A
2017-114	116
2017-115	123A
2017-117	123A
2018-01	123A
2019-45	519
2020	160
2020-00	126
2020-01	159
2020-01(Transistor)	159
2020-02	161
2020-03	316
2020-04	133
2020-05	199
2020-06	123A
2020-07	159
2020-1	703A
2020-2	703A
2020-3	703A
2020R	5897
2020(Rect.)	5896
2021	160
2021-00	126
2021-05	116
2021-1	718
2021-2	718
2021-17	5022A
2022-03	229
2022-04	235
2022-05	123A
2022-06	222
2022-07	109
2022-08	116
2022-77	109
2022-244	123A
2023-41	139A
2024-1	731
2025	5918
2025-1	730
2025-2	730
2025-3	730
2025-2300-017101	116
2025-9110-18810	109
2026	123A
2026-00	123A
2026-4	241
2026-5	241
2027	116
2027-00	195A
2027(E.F.Johnson)	123A
2027(R.F.)	195A
2028	108
2028-00	108
2029	241
2029-1	790
2029-2	790
2029H	241
2030	5918
2030-1	715
2030R	5919
2031-1	714
2031-17	116
2032-33	108
2032-34	108
2032-35	294
2032-36	132
2032-38	4011B
2035	5920
2035-5100-53660	199
2035-5100-69372	199
2036-26	5069A
2036-58	153
2036-59	152
2036-68	909
2036-72	909
2036-93	909
2039-2	101
2040	5920
2040-17	140A
2041-01	229
2041-02	287
2041-03	186A
2041-04	235
2041-05	177
2041-06	139A
2042-1	1112
2042-2	1111
2042-17	102A
2043-17	159
2044-1	738
2044-17	123
2045	5922
2045-1	804
2045-17	116
2046-03	229
2047-49	199
2047-50	295
2047-51	235
2047A2-288	102A

To Be Replaced	ECG Replacement
2048-17	229
2049-03	977
2049-32	614
2049-33	5801
2049-34	139A
2050	5922
2052	116
2055-32	152
2055-113	199
2055-114	295
2055-115	235
2055-116	152
2055-117	1301
2055-118	1193
2055-119	116
2055-120	116
2055-121	145A
2055-122	138A
2055-140	614
2055-141	7473
2055-159	109
2056-04	1082
2056-05	973
2056-06	1160
2056-07	199
2056-08	316
2056-09	315
2056-10	294
2056-11	136A
2056-75	312
2057A2-37	126
2057A2-60	126
2057A2-61	158
2057A2-62	123A
2057A2-64	123A
2057A2-65	126
2057A2-66	126
2057A2-80	126
2057A2-81	124
2057A2-84	124
2057A2-87	229
2057A2-103	123A
2057A2-109	107
2057A2-110	107
2057A2-113	123A
2057A2-116	107
2057A2-117	107
2057A2-119	108
2057A2-120	107
2057A2-121	123A
2057A2-122	123A
2057A2-127	108
2057A2-128	107
2057A2-131	123A
2057A2-145	123A
2057A2-146	123A
2057A2-147	102A
2057A2-148	102A
2057A2-150	129
2057A2-151	128
2057A2-152	123A
2057A2-153	123A
2057A2-154	123A
2057A2-155	123A
2057A2-156	128
2057A2-157	161
2057A2-158	161
2057A2-159	160
2057A2-163	108
2057A2-165	102A
2057A2-166	160
2057A2-167	103A
2057A2-179	108
2057A2-180	161
2057A2-181	161
2057A2-182	159
2057A2-183	159
2057A2-184	123A
2057A2-185	161
2057A2-187	161
2057A2-192	161
2057A2-193	161
2057A2-195	161
2057A2-196	161
2057A2-197	161
2057A2-198	159
2057A2-199	128
2057A2-200	106
2057A2-201	108
2057A2-202	161
2057A2-203	106
2057A2-204	161
2057A2-205	160
2057A2-206	102
2057A2-207	161
2057A2-208	123A
2057A2-209	123A
2057A2-210	102A
2057A2-211	131
2057A2-212	199
2057A2-215	123A
2057A2-216	107
2057A2-217	107
2057A2-218	107
2057A2-219	107
2057A2-220	107
2057A2-221	107
2057A2-222	123A
2057A2-223	124
2057A2-224	108
2057A2-225	123A
2057A2-226	123A
2057A2-230	128
2057A2-231	160
2057A2-232	160

To Be Replaced	ECG Replacement
2057A2-237	107
2057A2-241	102A
2057A2-249	199
2057A2-251	161
2057A2-252	160
2057A2-257	199
2057A2-258	161
2057A2-259	107
2057A2-260	199
2057A2-261	154
2057A2-262	199
2057A2-263	126
2057A2-264	123A
2057A2-265	127
2057A2-272	199
2057A2-273	199
2057A2-274	199
2057A2-275	199
2057A2-276	123A
2057A2-277	159
2057A2-278	123A
2057A2-279	123A
2057A2-280	123A
2057A2-281	123A
2057A2-284	128
2057A2-285	123A
2057A2-288	102A
2057A2-289	123A
2057A2-289(4th IF)	233
2057A2-290	199
2057A2-294	123A
2057A2-295	128
2057A2-296	123A
2057A2-297	123A
2057A2-298	159
2057A2-300	123A
2057A2-302	104
2057A2-303	123A
2057A2-304	107
2057A2-305	107
2057A2-306	123A
2057A2-307	159
2057A2-309	108
2057A2-310	108
2057A2-311	108
2057A2-313	108
2057A2-314	108
2057A2-316	123A
2057A2-317	158
2057A2-322	107
2057A2-323	107
2057A2-324	123A
2057A2-325	107
2057A2-326	107
2057A2-329	102A
2057A2-331	107
2057A2-332	123A
2057A2-333	199
2057A2-334	199
2057A2-341	123A
2057A2-342	108
2057A2-343	159
2057A2-352	199
2057A2-353	159
2057A2-356	107
2057A2-359	159
2057A2-370	199
2057A2-373	199
2057A2-374	123A
2057A2-385	199
2057A2-386	108
2057A2-387	123A
2057A2-390	123A
2057A2-391	199
2057A2-392	108
2057A2-393	108
2057A2-394	108
2057A2-395	107
2057A2-396	123A
2057A2-397	159
2057A2-398	123A
2057A2-399	123A
2057A2-400	159
2057A2-401	123A
2057A2-402	108
2057A2-403	159
2057A2-404	199
2057A2-405	199
2057A2-406	159
2057A2-412	123A
2057A2-427	289
2057A2-428	199
2057A2-430	159
2057A2-432	229
2057A2-433	123A
2057A2-434	123A
2057A2-436	199
2057A2-445	132
2057A2-446	298
2057A2-448	108
2057A2-449	123A
2057A2-452	123A
2057A2-454	199
2057A2-457	159
2057A2-463	123A
2057A2-464	123A
2057A2-465	108
2057A2-466	107
2057A2-468	128
2057A2-475	199
2057A2-477	229
2057A2-478	229
2057A2-479	123A
2057A2-483	229
2057A2-484	293

To Be Replaced	ECG Replacement
2057A2-487	123A
2057A2-489	159
2057A2-501	107
2057A2-502	199
2057A2-503	107
2057A2-504	108
2057A2-505	108
2057A2-507	229
2057A2-508	229
2057A2-509	108
2057A2-510	123A
2057A2-511	123A
2057A2-518	199
2057A2-524	297
2057A2-526	229
2057A2-527	229
2057A2-529	234
2057A2-539	107
2057A2-540	107
2057A2-541	229
2057A2-542	199
2057A2-543	199
2057A2-558	229
2057A2-559	123A
2057A2-560	199
2057A2-561	159
2057A2-988	102A
2057A10-64	123A
2057A32-25	1124
2057A32-26	1142
2057A32-33	801
2057A42-477	229
2057A100-4	103A&158CP
2057A100-8	102A
2057A100-9	102A
2057A100-14	103A&158(CP)
2057A100-16	130MP
2057A100-17	128
2057A100-18	103A&158(CP)
2057A100-21	102A
2057A100-23	158
2057A100-24	102A
2057A100-26	130MP
2057A100-30	102A&103A(CP)
2057A100-34	158
2057A100-35	103A&158(CP)
2057A100-40	192&193(CP)
2057A100-41	158
2057A100-44	158
2057A100-45	186&187
2057A100-47	184&185(CP)
2057A100-48	158
2057A100-49	184
2057A100-50	186&187
2057A100-51	159
2057A100-53	107
2057A100-55	102A
2057A100-62	293&294
2057A100-66	184 & 185
2057A100-67	297
2057A100-69	289&290
2057A100-72	297
2057A-120	108
2057A-429	108
2057B0-3	102A&103A
2057B2-4	102
2057B2-14	108
2057B2-23	102A
2057B2-28	102A
2057B2-29	102A
2057B2-32	102
2057B2-34	102
2057B2-35	126
2057B2-37	126
2057B2-38	123A
2057B2-41	126
2057B2-42	126
2057B2-43	102
2057B2-44	102
2057B2-45	102
2057B2-46	103
2057B2-47	124
2057B2-48	126
2057B2-49	102
2057B2-50	126
2057B2-51	126
2057B2-52	102A
2057B2-57	102
2057B2-58	124
2057B2-59	123
2057B2-60	126
2057B2-61	158
2057B2-62	123A
2057B2-63	123
2057B2-64	108
2057B2-65	126
2057B2-66	126
2057B2-67	126
2057B2-68	126
2057B2-69	123A
2057B2-70	126
2057B2-71	126
2057B2-72	102
2057B2-73	123
2057B2-77	126
2057B2-78	102
2057B2-79	126
2057B2-80	126
2057B2-81	126
2057B2-83	102
2057B2-84	124
2057B2-85	108
2057B2-86	102
2057B2-87	108
2057B2-88	126

To Be Replaced	ECG Replacement
2057B2-89	160
2057B2-90	160
2057B2-93	160
2057B2-94	102A
2057B2-97	123A
2057B2-99	102A
2057B2-101	107
2057B2-102	107
2057B2-103	108
2057B2-104	126
2057B2-105	126
2057B2-107	102A
2057B2-108	108
2057B2-109	108
2057B2-110	108
2057B2-111	108
2057B2-112	108
2057B2-113	123A
2057B2-114	107
2057B2-115	107
2057B2-116	107
2057B2-117	107
2057B2-118	126
2057B2-119	108
2057B2-120	108
2057B2-121	123A
2057B2-122	123A
2057B2-123	123A
2057B2-124	102A
2057B2-125	107
2057B2-127	108
2057B2-128	108
2057B2-129	102A
2057B2-130	123A
2057B2-133	121
2057B2-134	127
2057B2-135	102A
2057B2-136	127
2057B2-137	102A
2057B2-138	161
2057B2-139	161
2057B2-140	154
2057B2-141	126
2057B2-142	102A
2057B2-143	107
2057B2-149	160
2057B2-150	153
2057B2-151	152
2057B2-152	123A
2057B2-153	123A
2057B2-154	123A
2057B2-155	123A
2057B2-157	160
2057B2-158	160
2057B2-159	160
2057B2-160	108
2057B2-161	108
2057B2-162	108
2057B2-192	161
2057B2-206	102A
2057B2A2-118	160
2057B45-14	102A
2057B-59	199
2057B-84	124
2057B-85	123A
2057B100-1	102A
2057B100-3	102A&103A
2057B100-4	103A
2057B100-5	102A&103A
2057B100-6	102A
2057B100-8	102A
2057B100-9	102A
2057B100-11	131
2057B100-12	108
2057B100-13	102A
2057B100-16	130MP
2057B100-17	128
2057B101-4	123A
2057B102-4	123A
2057B103-4	123A
2057B104-8	154
2057B106-12	159
2057B107-8	128
2057B108-6	159
2057B109-9	128
2057B110-9	129
2057B111-9	128&129(CP)
2057B112-9	129
2057B-113	108
2057B113-9	128
2057B114-9	129
2057B115-9	129
2057B116-9	129
2057B117-9	123A
2057B118-12	123A
2057B119-2	123A
2057B120-12	123A
2057B121-9	129
2057B122-9	129
2057B123-10	124
2057B124-10	121
2057B125-9	123A
2057B126-12	128
2057B129-9	128
2057B141-4	123A
2057B142-4	123A
2057B143-12	123A
2057B144-12	128
2057B145-12	129
2057B146-12	123A
2057B147-12	159
2057B149-12	133
2057B151-6	123A
2057B152-12	123A
2057B153-9	128

To Be Replaced	ECG Replacement
2057B155-10	175
2057B156-9	128
2057B157-9	162
2057B158-10	175
2057B159-12	159
2057B163-12	129
2057B168	102A
2057B169	102A
2057B175-9	162
2057B186	160
2057B206	102A
2058	126
2058-02	312
2058-03	138A
2058-38	977
2058-39	612
2060	5924
2060-024	116
2061-1	783
2061-31	229
2061-42	977
2061-44	177
2061-45	614
2061-47	960
2061A45-38	177
2061A45-47	102
2061A45-72	116
2061A45-93	177
2061B45-14	158
2061B45-35	116
2062-17	237
2062-17A	237
2063-17	199
2063-17-12	123A
2064-17	5072A
2064(Crown)	123A
2065-02	199
2065-03	123A
2065-04	229
2065-05	295
2065-06	235
2065-07	295
2065-08	519
2065-0824-10110	1183
2065-17	177
2065-51	4011B
2065-52	977
2065-53	1198
2065-54	199
2065-55	222
2066-17	177
2067-1	715
2069-1	715
2070	5928
2071	181
2074-17	132
2075-1	801
2076	177
2076-1	742
2076-107	109
2077-1	788
2079-01	293
2079-02	108
2079-03	295
2079-04	235
2079-05	177
2079-06	125
2079-39	614
2079-40	221
2079-42	5072A
2079-92	1166
2079-93	139A
2079-106	107
2079-107	109
2080	5928
2081-6	153
2081-17	186A
2082-6	152
2084-17	125
2085-17	184
2086-12	293
2087-46	139A
2090A43-1	112
2090A53-2	120
2090(Crown)	154
2091-02	1081A
2091-03	295
2091-49	1006
2091-50	1005
2091-51	199
2093A2-289	108
2093A3D-2	117
2093A3D-20	131
2093A4-2	117
2093A5-2	114
2093A5-10	113
2093A6-1	117
2093A6-2	117
2093A8-1	109
2093A9-3	100
2093A9-4	100
2093A12-1	116
2093A25-3	109
2093A33-1	109
2093A38-1	109
2093A38-5	109
2093A38-10	109
2093A38-11	177
2093A38-13	116
2093A38-14	109
2093A38-15	109
2093A38-21	109
2093A38-22	110MP
2093A38-23	102
2093A38-24	128

To Be Replaced	ECG Replacement
2093A38-27	109
2093A38-28	116
2093A38-30	109
2093A38-31	109
2093A38-32	109
2093A38-33	109
2093A38-34	109
2093A38-35	110
2093A38-37	177
2093A38-40	109
2093A39-12	142A
2093A41	109
2093A41-2	109
2093A41-6	125
2093A41-14	109
2093A41-16	139A
2093A41-24	139A
2093A41-24A	139A
2093A41-29	110
2093A41-38	109
2093A41-40	102
2093A41-41	102
2093A41-42	125
2093A41-43	125
2093A41-45	116
2093A41-49	116
2093A41-50	109
2093A41-51	116
2093A41-53	138A
2093A41-54	116
2093A41-55	116
2093A41-56	142A
2093A41-57	116
2093A41-58	115
2093A41-59	109
2093A41-62	116
2093A41-63	135A
2093A41-65	125
2093A41-66	116
2093A41-67	506
2093A41-68	109
2093A41-69	506
2093A41-70	5071A
2093A41-72	506
2093A41-73	506
2093A41-74	503
2093A41-75	116
2093A41-76	177
2093A41-77	125
2093A41-78	116
2093A41-81	116
2093A41-82	5022A
2093A41-86	116
2093A41-87	158
2093A41-88	116
2093A41-89	116
2093A41-90	135A
2093A41-92	109
2093A41-96	506
2093A41-102	177
2093A41-103	116
2093A41-104	116
2093A41-105	177
2093A41-108	116
2093A41-110	116
2093A41-112	167
2093A41-113	143A
2093A41-115	116
2093A41-116	116
2093A41-125	139A
2093A41-126	116
2093A41-129	177
2093A41-131	116
2093A41-139	116
2093A41-141	109
2093A41-148	109
2093A41-150	150A
2093A41-151	116
2093A41-152	116
2093A41-153	5070A
2093A41-154	109
2093A41-155	177
2093A41-158	177
2093A41-159	139A
2093A41-163	139A
2093A41-164	177
2093A41-165	177
2093A41-167	109
2093A41-169	109
2093A41-171	177
2093A41-172	177
2093A41-173	116
2093A41-181	109
2093A41-182	116
2093A41-185	116
2093A41-186	139A
2093A41-187	109
2093A41-189	116
2093A41-194	135A
2093A41-196	109
2093A41-197	116
2093A42-7	116
2093A43-2	112
2093A52-1	125
2093A57-1	118
2093A59-1	112
2093A69-1	125
2093A71-1	125
2093A75-1	120
2093A77-1	109
2093A78-1	125
2093A79-6	125
2093A80-1	142A
2093B4-6	116
2093B11-21	110MP

To Be Replaced	ECG Replacement
2093B38-4	177
2093B38-9	112
2093B38-14	116
2093B41-6	116
2093B41-8	116
2093B41-9	116
2093B41-10	116
2093B41-11	109
2093B41-12	116
2093B41-18	116
2093B41-20	116
2093B41-21	116
2093B41-22	116
2093B41-24	139A
2093B41-28	116
2093B41-29	110MP
2093B41-33	174
2093B41-34	116
2093B41-35	116
2093B41-37	116
2101	199
2101-03	177
2102	116
2102-010	109
2102-014	116
2102-017	116
2102-025	109
2102-028	109
2102-029	178
2102-031	614
2102-032	139A
2102-033	136A
2102-074	116
2106-17	5070A
2106-119	102A
2106-120	160
2106-121	102A
2106-122	102A
2106-123	102A
2106-124	109
2110	5914
2110N-41	177
2110N-42	116
2110N-132	161
2110N-133	161
2110N-134	175
2112-17	102A
2113	113
2114-0	154
2114-17	158
2115	5916
2115R	5917
2116-17	116
2119-101-090	1196
2119-101-100	1046
2119-204-050	1162
2119-204-060	1168
2120-17	5075A
2121-17	199
2122-3	172A
2122-17	109
2125	5918
2127-17	229
2130	5918
2132	186
2132-17	199
2132(GE)	123A
2134-17	313
2135	5920
2135E	735
2136	737
2136D	737
2136P	737
2136Pc	737
2136PC	737
2139-103-200	234
2139-305-360	229
2139-305-420	123A
2139-307-010	107
2145	5922
2148-17	116
2149-102-300	290
2149-303-650	198
2149-303-700	199
2149-303-850	198
2149-403-010	130
2150	5922
2150-17	139A
2151-17	109
2152	116
2158-1541	123A
2158-1558	159
2160	6400
2160-17	186A
2163-17	175
2167-17	237
2168-17	186A
2169-105-010	109
2169-105-020	109
2169-105-030	110
2169-205-070	177
2169-205-080	177
2169-219-050	506
2169-220-060	116
2169-304-060	506
2169-304-070	506
2169-304-090	506
2169-304-200	5071A
2169-304-210	5074A
2170	5928
2180-17	109
2180-41	178
2180-151	108
2180-152	108
2180-153	123A

To Be Replaced	ECG Replacement
2180-154	123A
2180-155	175
2181-17	290
2182-17	116
2187-17	229
2195-17	199
2196-17	109
2197-17	107
2198-17	116
2199-17	116
2200-17	116
2202-17	186A
2203	5072A
2203-17	5072A
2204-17	123
2206	116
2206-17	116
2207-17	199
2208-17	128
2209-17	177
2210-17	152
2211-17	153
2211B	116
2212-17	199
2213-17	107
2214-17	229
2215-17	160
2220-17	159
2224-17	229
2225-17	229
2226-17	229
2231-17	178MP
2232-17	109
2233-17	116
2243	121
2244-1	187
2245-17	186
2246-17	192
2261-17	294
2263	123A
2269	159
2270	123A
2270-5	128
2271	199
2272	159
2275-17	123A
2277P	804
2279-13	109
2280-13	109
2281-13	109
2282-13	109
2282-17	109
2282-17(RAT.DET)	110
2283-13	109
2283-17	116
2284-13	109
2284-17	107
2285-17	116
2289-13	178MP
2290-13	109
2290-17	123A
2291-17	107
2295	175
2300.036.096	159
2300.037-096	123A
2302	116
2302-17	233
2304	177
2309	139A
2312-17	184
2315-046	116
2319-17	116
2320-17	123A
2321-17	123A
2322-17	315
2323-17	136A
2328	177
2328-17	177
2330-021	138A
2330-191	125
2330-201	125
2330-252	125
2334-17	186A
2335-17	132
2336-17	312
2337-17	123A
2338-17	199
2339-17	5072A
2340-17	315
2341-17	5071A
2343-17	5072A
2347-17	104
2359-17	222
2361-17	289
2362-1(Sylvania)	108
2362-17	136A
2381-17	159
2382-17	152
2396-17	145A
2399-17	235
2400-17	177
2400-23	116
2400-27	116
2402	116
2402-453	102A
2402-454	102A
2402-455	102A
2402-456	131
2402-457	102A
2402-459	109
2402-461	116
2402-462	116
2402-463	116
2403	177

To Be Replaced	ECG Replacement
2405	177
2405-453	102A
2405-454	102A
2405-455	102A
2405-456	102A
2405-457	102A
2405-458	109
2405-459	116
2405-462	116
2405-463	116
2408-17	152
2408-326	102A
2408-328	102A
2408-329	158
2408-330	109
2408-331	116(2)
2409-17	519
2410-17	116
2411	116
2417	124
2418-17	237
2427-17	116
2427(RCA)	108
2432-1(RCA)	710
2434-1(RCA)	710
2434(RCA)	710
2436-17	5075A
2437-17	236
2438-17	109
2443(RCA)	123A
2444(RCA)	124
2445	108
2445-1(RCA)	711
2445(RCA)	711
2446-1(RCA)	121
2446(RCA)	123A
2447(RCA)	123A
2448-17	123A
2448(RCA)	159
2449-17	199
2450-17	132
2450(RCA)	108
2451-17	5072A
2452-17	139A
2453-17	177
2454-17	5801
2457-17	5071A
2459-17	306
2460-14(RCA)	156
2460-17	5075A
2470-1724	74H01
2470-1732	74H05
2472-5632	123A
2473-2109	7408
2473(RCA)	108
2474(RCA)	154
2475(RCA)	123A
2476(RCA)	108
2477-173	519
2477(RCA)	108
2478	126
2478A	126
2478B	126
2482(RCA)	129
2487B	160
2488	126
2488A	126
2489	126
2489A	160
2490	102A
2490A	102A
2491	124
2491A	124
2491B	124
2494(RCA)	127
2495-012	126
2495-013	126
2495-014	102A
2495-078	160
2495-079	160
2495-080	102A
2495-082	160
2495-166-1	108
2495-166-2	123A
2495-166-4	108
2495-166-8	108
2495-166-9	108
2495-200	126
2495-376	160
2495-377	160
2495-378	160
2495-388	102A
2495-488-1	160
2495-488-2	160
2495-489	125
2495-520	108
2495-521	108
2495-522-1	108
2495-522-4	123A
2495-523-1	108
2495-529	123A
2495-567-2	102A
2495-567-3	102A
2495-586-2	102A
2495(RCA)	123A
2496-125-2	123A
2496(RCA)	127
2497-473	102A
2497-496	102A
2498-163	128
2498-507-2	108
2498-507-3	108

To Be Replaced	ECG Replacement
2498-508-2	108
2498-508-3	108
2498-513	125
2498-903-2	108
2498-903-3	108
2500(RCA)	127
2502	129
2502(RCA)	102A
2503-100	140A
2510-31	109
2510-32	116
2510-103	199
2510-104	123A
2510-105	186
2514	320
2516	712
2516-1	712
2516-1(RCA)	712
2516(RCA)	712
2519-17	152
2520-17	152
2521-17	199
2522	116
2523	116
2524-17	125
2526-17	116
2527-17	136A
2528-17	116
2546(RCA)	123A
2548A0157	124
2549	219
2554-1(RCA)	730
2554-2(RCA)	730
2554-3	730
2554-3(RCA)	730
2554-4(RCA)	730
2559-1(RCA)	728
2560	729
2560-1(RCA)	729
2560(J.C.Penney)	729
2560(RCA)	729
2577	121
2580	729
2584	123
2603-180	102A
2603-181	102A
2603-182	102A
2603-183	126
2603-184	123A
2603-186	109
2606-286	102A
2606-287	102A
2606-288	176
2606-291	102A
2606-292	126
2606-294	108
2606-295	160
2606-296	109
2606-299	116
2606-303	5069A
2612	102A
2620	154
2626-1	912
2633(RCA)	108
2634-1	108
2634(RCA)	108
2636	108
2664-1	726
2665-1	723
2665-2	723
2665-3	723
2700	160
2703-384	102A
2703-385	102A
2703-386	102A
2703-387	176
2703-388	158
2703-389	109
2703-390	116(2)
2704-384	102A
2704-385	102A
2704-386	102A
2704-387	158
2704-388	109
2704-389	116
2762	116
2763	116
2766	116
2774	135A
2777	116
2779	116
2780	121
2780-3	121MP
2780-4	121
2780-5	121
2780(Airline)	121MP
2781	102
2784	116
2786	116
2787	123A
2789	109
2791	126
2794	116
2795A	139A
2796	109

To Be Replaced	ECG Replacement
2797	160
2798	159
2799	126
2799-1	789
2799-2	789
2802	125
2802-1	781
2802-1(Bendix)	781
2802-2	781
2842-056	175
2842-875	181
2853-1	186
2853-2	152
2853-3	186
2854	123A
2854-1	186
2854-2	152
2854-3	186
2855-1	186
2855-2	152
2855-3	186
2856-1	186
2856-2	152
2856-3	186
2874(RCA)	726
2874(Sears)	726
2900-007	108
2901-010	121
2904-008	121
2904-014	121
2904-016	126
2904-029	126
2904-030	224
2904-032	128
2904-033	108
2904-034	123
2904-035	123
2904-037	195A
2904-038	159
2904-038H05	100
2904-045	123A
2904-053	229
2904-054	123A
2904-057	184
2904-058	188
2906-004	1255
2906-005	746
2906-006	1192
2925	123A
2925(E.F. Johnson)	123A
3000-348	156
3001	108
3001A	116
3001F	5529
3001G	5530
3001H	5531
3002	108
3002(EF Johnson)	748
3003(SEARS)	107
3004-856	102A
3004(SEARS)	107
3005-861	123A
3005(SEARS)	123A
3006(SEARS)	123A
3007(SEARS)	123A
3008	160
3008(CB)	126
3008(E.F.Johnson)	160
3009	160
3009(E.F.Johnson)	160
3009(Mixer)	126
3009(SEARS)	102A
3010	126
3010(E.F.Johnson)	126
3010(IF)	126
3010(SEARS)	102A
3011	123A
3011(EFJohnson)	108
3012	106
3012(EFJohnson)	106
3012(NPN)	108
3012(PNP)	159
3012(SEARS)	176
3013(SEARS)	176
3014(SEARS)	102A
3016B	601
3017	159
3017(E.F.Johnson)	159
3018	108
3018(E.F.Johnson)	108
3019	159
3019(EFJohnson)	126
3020	108
3021	108
3022	128
3023	161
3024	160
3024(E.F.Johnson)	160
3025	160
3026	123A
3027	161
3028	108
3029	107
3034(RCA)	128
3054	175
3055-1	130
3055-3	130
3059(RCA)	316
3061	123A
3064T	780
3065D	712

To Be Replaced	ECG Replacement
3065E	712
3066D	728
3066E	728
3067D	729
3067E	729
3069(Arvin)	116
3074A20	116
3074A21	116
3075D	723
3075E	723
3075PC	723
3076HC	781
3076PC	781
3076Pc	781
3102(RCA)	367
3103(RCA)	367
3105	5980
3107-108-40401	530
3107-108-40404	530
3107-108-40501	523
3107-204-9000	123A
3107-204-90010	123A
3107-204-90020	123A
3107-204-90070	121
3107-204-90080	108
3107-204-90100	107
3107-204-90140	104
3107-204-90150	199
3107-204-90180	210
3107-204-90182	152
3107-204-90190	104
3110	5982
3110R	5983
3111	123A
3112	102A
3113	123A
3115	5986
3115R	5987
3120	5986
3120R	5987
3125	5988
3125R	5989
3130	5988
3130-0000-014	981
3130-3157-603	708
3130-3157-604	7400
3130-3157-608	7493A
3130-3157-614	740A
3130-3167-901	817
3130-3193-501	7445
3130-3193-507	74145
3130-3193-512	787
3130-3248-801	1115
3130R	5989
3135	5990
3140	5990
3140R	5991
3145	5992
3146-977	130
3150	5992
3150R	5993
3152-159	175
3152-170	130
3160	5994
3170	5998
3180	5998
3190(Harmon Kardon)	181
3202-5H01	128
3202-51-01	128
3212(Harmon Kardon)	123A
3221(Harmon Kardon)	123A
3222	129
3223	128
3223(Harmon Kardon)	128
3225	6030
3225R	6031
3227-E	108
3235	5990
3245	5992
3251	128
3270	5998
3280	5998
3295-001	124
3301(SEARS)	107
3322-6	109
3367	172A
3370	108
3373	181
3374-3	358
3377	116
3391	199
3391A	199
3391A(Sears)	199
3391(Sears)	199
3400-2412-3	903
3402	123A
3425	100
3434	100
3435	100
3441	128
3456	176
3458	160
3476(RCA)	161
3499	130
3500	100
3502-1(RCA)	704
3502-2(RCA)	704
3502(RCA)	704
3503(RCA)	124
3504(RCA)	160
3505	109
3505(Airline)	178MP
3505(RCA)	123A
3506	143A

To Be Replaced	ECG Replacement
3506(RCA)	123A
3507(RCA)	102A
3507(Sears)	107
3507(Wards)	123A
3508	128
3508(RCA)	123A
3508(Sears)	161
3508(Wards)	108
3509	108
3509(Sears)	123A
3509(Wards)	123A
3510(RCA)	123A
3510(Sears)	108
3510(Wards)	108
3511	108
3511(Sears)	132
3511(Wards)	132
3512	121
3512(RCA)	132
3512(Sears)	132
3512(Wards)	132
3513	159
3513(RCA)	123A
3513(Sears)	159
3513(Wards)	159
3514	121
3514(RCA)	127
3514(Sears)	107
3514(Wards)	123A
3515(RCA)	121
3516	121
3516(RCA)	161
3516(Wards)	108
3517	102A
3518(RCA)	161
3519-1(RCA)	199
3519(RCA)	123A
3520-1	124
3520(RCA)	124
3520(WARDS)	142A
3521(SEARS)	123A
3522(SEARS)	159
3523(RCA)	129
3523(SEARS)	123A
3524-1	108
3524-1(RCA)	108
3524-2(RCA)	108
3524(RCA)	108
3524(SEARS)	159
3525(RCA)	123A
3525(SEARS)	185
3526(RCA)	123A
3526(SEARS)	184
3527(RCA)	108
3528-1	785
3528-1(RCA)	785
3529	116
3529A	156
3529B	156
3529C	156
3530(RCA)	108
3531-021-000	7413
3531-022-000	74190
3531-023-000	74141
3531-030-000	788
3531-031-000	720
3531-033-000	1111
3532-1	128
3532(RCA)	123A
3533	722
3533-1	129
3533(RCA)	129
3534(RCA)	160
3535	319
3535-110-50008	804
3535-110-50009	804
3535(RCA)	319
3536-1	123AP
3536-2	123AP
3536(RCA)	123AP
3537(RCA)	108
3538-7	230
3538-8	231
3538(RCA)	123A
3539-307-001	108
3539-307-002	108
3539(RCA)	108
3540-1(GE)	159
3540(RCA)	159
3541(RCA)	123A
3543(RCA)	123A
3544	102A
3544-1	123A
3544(RCA)	128
3545(RCA)	154
3546-1(RCA)	123A
3546-2(RCA)	123A
3546(RCA)	123A
3547(RCA)	225
3548(RCA)	123A
3549-1(RCA)	159
3549-2(RCA)	159
3549(RCA)	159
3551	126
3551A	126
3551A BLU	126
3551A-BLU	126
3551A GRN	126
3551A-GRN	126
3551A(RCA)	123A
3551(RCA)	123A
3552	225
3552-1(RCA)	191
3552(RCA)	154
3553	225

To Be Replaced	ECG Replacement
3553-3	128
3554(RCA)	123A
3555-01	5547
3555-02	5547
3555-03	5547
3555-1(RCA)	128
3555-3	128
3555(RCA)	123A
3556-1	123A
3558(RCA)	123A
3559-1	159
3559(RCA)	159
3560-1(RCA)	107
3560-2	128
3560-2(RCA)	123A
3560(RCA)	123A
3561	123A
3561-1(GE)	128
3561-1(RCA)	123A
3561(RCA)	123A
3562(RCA)	159
3563(PACE)	229
3563(RCA)	159
3564(RCA)	162
3565	124
3565(RCA)	128
3566	124
3566(RCA)	128
3567-2(RCA)	157
3567(RCA)	124
3568(RCA)	108
3568(Wards)	108
3569	161
3569(RCA)	123A
3570	159
3570-1	159
3570P	159
3570(RCA)	159
3571-1	161
3571R	123A
3571(RCA)	123A
3572-3	108
3572(RCA)	123A
3574	159
3574-1	129
3574-1(RCA)	159
3574(RCA)	159
3576	233
3576(RCA)	233
3577-1	123A
3577(RCA)	123A
3578-1	102A
3579	161
3579(RCA)	161
3581(RCA)	159
3582	225
3582(RCA)	154
3583	5804
3583(RCA)	127
3584(RCA)	124
3585-5	230
3585-6	231
3585-7	230
3585-8	231
3586(RCA)	123A
3588	123A
3588(RCA)	222
3589	123A
3590	129
3591	128
3592(RCA)	129
3597	159
3597-1	159
3597-1(RCA)	159
3597-2	159
3598(RCA)	108
3600	102
3601	128
3601-1	123A
3601-2	123A
3601(RCA)	123A
3603(RCA)	108
3604(RCA)	108
3607	101
3608-1(RCA)	190
3608-2(J.C.Penney)	128
3608-2(RCA)	128
3608(RCA)	128
3609	101
3610(RCA)	108
3612(RCA)	152
3613	191
3613-2(GE)	191
3613-3	191
3613-3(RCA)	191
3613(RCA)	171
3614-1	123A
3614-3	123A
3615(RCA)	128
3616-1(RCA)	129
3618	221
3618-1	121
3618(RCA)	108
3619-1	5640
3620-1	159
3620(RCA)	159
3621(RCA)	152
3622-1	128
3622-2(RCA)	128
3622(RCA)	128
3625-1	128
3625(RCA)	123A
3626	123A

To Be Replaced	ECG Replacement
3626-1	123A
3627	159
3627-1	159
3627(RCA)	159
3628-2(RCA)	171
3628-3	188
3629-3	189
3631	159
3631-1	123A
3631-1(RCA)	152
3631(RCA)	152
3632-1	196
3632-2(RCA)	186
3632-3	196
3633-1	710
3633-1(GE)	171
3634.0011	163A
3634.2011	123A
3635-1	159
3635-1	222
3635(RCA)	222
3636	124
3637(RCA)	162
3638-1	218
3640(RCA)	196
3646-2(RCA)	108
3647-1	165
3648(RCA)	127
3649-1	165
3652-2	229
3656-1	182
3656-2	182
3656-4	182
3657-1	229
3657-2	229
3662-2	165
3665-2	130
3666(RCA)	128
3669	165
3676	233
3676(RCA)	233
3677-1	780
3677-2	780
3677-2(RCA)	780
3677-3	780
3677-3(RCA)	780
3677(RCA)	711
3679	191
3679-1	191
3680	161
3680-1	161
3681-1	904
3682-1	153
3682(RCA)	185
3683-1	130
3683-2	130
3686-1	712
3686(RCA)	102A
3687	154
3687-1	171
3688-1	5404
3693(Arvine)	108
3697-1	159
3700-153	116
3701	137A
3702	137A
3703	137A
3704	137A
3706	123A
3714H1	130
3714H1A	130
3721	175
3742	188
3746	100
3746-00	129
3746-01	129
3750	160
3755-1	5014A
3755-2	5014A
3771	181
3772-1	181
3772-2	181
3793	5547
3819(RCA)	132
3843	152
3843(Harmon Kardon)	130
3843(Sears)	196
3844(Harmon Kardon)	128
3851	126
3852	100
3867	123A
3868	195A
3878	154
3881	161
3907	102
3907(2N404A)	126
3961	126
3961(G.E.)	160
3970	100
3970CL	102A
3970(G.E.)	102A
3980-002	175
3991-303-112	785
3999	123A
4001-151	125
4001-222	160
4001-223	160
4001-224	102A
4001-225	102A
4001-226	102A
4001-228	190
4001-230	109
4001B	154

To Be Replaced	ECG Replacement
4001(E F Johnson)	329
4001(IC)	1001
4001(Magnavox)	177
4001(Module)	1001
4001(Transistor)	154
4002	195A
4002(PACE)	123A
4002(Penncrest)	123A
4002(SEARS)	109
4003E	123A
4003(SEARS)	109
4004	195A
4004(E F JOHNSON)	329
4004(Penncrest)	102A
4004(SEARS)	109
4004(Sears)	195A
4005(CB)	195A
4005(E.F.Johnson)	329
4005(SEARS)	109
4006	4006B
4006B	4006B
4006(E.F.Johnson)	128
4006(SEARS)	109
4006(Zener)	137A
4007	195A
4007(SEARS)	109
4008C	311
4008(E.F.Johnson)	128
4008(E F Johnson)	311
4008(SEARS)	109
4009	195A
4009(Penncrest)	158
4009(SEARS)	109
4010	123A
4010(E.F.Johnson)	108
4010(Penncrest)	109
4010(SEARS)	109
4011(E.F.Johnson)	195A
4011(IC)	4011B
4011-PC	4011B
4011PC	4011B
4011(Penncrest)	177
4011(SEARS)	109
4011(Transistor)	195A
4012(E.F.Johnson)	195A
4012(SEARS)	109
4013	159
4013(E.F.Johnson)	195A
4013(Rectifier)	116
4014	116
4014-000-10160	102A
4014-200-30110	177
4018	4018B
4018B	4018B
4020	785
4021	123A
4022B	4022B
4025	4025B
4029	4029B
4031P	1010
4032P	1011
4032P-8M4	1011
4034	4034B
4034B	4034B
4035B	4035B
4035(RCA)	190
4036	129/400
4039-00	199
4039-01	199
4041-000-1018	109
4041-000-10150	116
4041-000-10160	102A
4041-000-20120	102A
4041-000-30180	102A
4041-000-40270	107
4041-000-40300	107
4041-000-60170	107
4041-000-60200	107
4041-000-80100	126
4041-200-10180	109
4041-200-40100	109
4043	4043B
4043B	4043B
4044	4044B
4044B	4044B
4046(Sears)	123A
4049	4049B
4050	755
4051-300-10150	116
4051P(IC)	1150
4053	4053B
4053B	4053B
4057	123A
4060	4060B
4060B	4060B
4063	4063B
4063B	4063B
4066B	4066B
4072	4072B
4072B	4072B
4073	4073B
4073B	4073B
4075	4075B
4075B	4075B
4076	4076B
4076B	4076B
4080-187-0507	128
4080-838-0001	175
4080-838-2	175
4080-838-3	175
4080-866-0006	196

To Be Replaced	ECG Replacement
4080-866-1	175
4080-866-2	175
4080-879-0001	196
4082	4082B
4082-501-0001	121
4082-748-0002	136A
4082B	4082B
4085	123A
4086	159
4087	159
4098	4098B
4098B	4098B
4099A	189
4101-685	116
4104	329
4117-1	949
4117-2	949
4124	5257A
4125	5259A
4126(E.F.Johnson)	159
4126(Transistor)	159
4126(Zener)	5260A
4127	5262A
4128	5263A
4129	5265A
4130	5266A
4131	5268A
4132	5269A
4133	5270A
4134	5271A
4135	5272A
4136	5274A
4137	5276A
4138	5278A
4140	5281A
4141	5282A
4142	5283A
4143	5284A
4144	5285A
4145(Rectifier)	6156
4145(Zener)	5287A
4146	5288A
4148	5291A
4149	5292A
4150	5294A
4150-01	123A
4151	5296A
4151-01	159
4164P1M	5695
4167(Airline)	161
4167(Penncrest)	161
4167(SEARS)	108
4168(Penncrest)	161
4168(SEARS)	108
4168(WARDS)	161
4168(Wells Gardner)	161
4169(Penncrest)	161
4169(SEARS)	108
4169(WARDS)	161
4169(Wells Gardner)	161
4216	130
4216(Harmon Kardon)	130
4218	192
4218(Harmon Kardon)	184
4219	129
4219(Harmon Kardon)	185
4220	5252A
4221	5253A
4222	5254A
4223	5255A
4224	5257A
4225	5259A
4226	5260A
4227	5262A
4228	5263A
4229	5265A
4230	5266A
4231	5268A
4232	5269A
4233	5270A
4234	5271A
4235	5272A
4236	5274A
4237	5276A
4238	5278A
4240	5281A
4241	5282A
4242	5283A
4243	5284A
4244	5285A
4245	5287A
4246	5288A
4247	104
4248	5291A
4249	5292A
4250	5294A
4251	5296A
4295-1	756
4295-1(RCA)	756
4295-2	756
4295-2(RCA)	762
4306	128
4306(Harmon Kardon)	128
4309(Airline)	123A
4310 (Airline)	159
4312(RCA)	124
4313	102
4315	102
4320	5252A
4321	5253A
4322	5254A
4322-542	123A
4323	5255A
4324	5257A
4325	5259A
4326	5260A
4327	5262A
4328	5263A
4329	5265A
4330	5266A
4331	121
4331(Zener)	5268A
4332	5269A
4333	5270A
4334	5271A
4335	5272A
4336	5274A
4337	5276A
4338	5278A
4339	1115
4340	5281A
4341	5282A
4342	5283A
4343	5284A
4344	5285A
4345	5287A
4346	5288A
4347	104
4348	102
4348(Zener)	5291A
4349	102
4349(Zener)	5292A
4350	5294A
4351	5296A
4354	109
4363	126
4363BLU	126
4363GRN	126
4363ORN	126
4363WHT	126
4364	126
4365	126
4366	126
4367	126
4367-001	129
4368	160
4381P1	9914
4398	102
4400Y	1211
4403	116
4409	801
4419-4	180
4420	5252A
4421	5253A
4422	5254A
4423	5255A
4424	5257A
4425	5259A
4426	5260A
4427	5262A
4428	5263A
4429	5265A
4430	5266A
4431	5268A
4432	5269A
4433	5270A
4434	5271A
4435	5272A
4436	5274A
4437	5276A
4437-1	787
4437-1(RCA)	787
4437-2	787
4437-2(RCA)	787
4437-3	787
4437-3(RCA)	787
4438	5278A
4438-1	788
4438-1(RCA)	788
4438-2	788
4438-2(RCA)	788
4438-3	788
4438-3(RCA)	788
4439-1	789
4439-1(RCA)	789
4439-2	789
4439-2(RCA)	789
4440	5281A
4441	5282A
4442	159
4442-3	188
4442-366	196
4442(Zener)	5283A
4443	5284A
4444	5285A
4445	5287A
4446	5288A
4448	5291A
4449	5292A
4450	102
4450(Zener)	5294A
4451	100
4451(Zener)	5296A
4454	126
4456	126
4457	126
4459	127
4460	720
4460-2	789
4460-3	789
4462	102
4463	121
4464	123
4465	123
4466ORN	102
4467	176
4467(Rectifier)	5944
4468BRN	102
4469RED	102
4470	123
4470-31	123
4470-32	123
4470-33	123
4470M-32	123
4470-ORN	176
4471ORN	102
4471YEL	102
4472GRN	102
4473	102A
4473-1	108
4473-2	108
4473-3	108
4473-4	123A
4473-5	123A
4473-5X	123A
4473-6	108
4473-7	108
4473-8	108
4473-9	123A
4473-11	108
4473-12	123A
4473-9636	199
4473-M3	128
4473-M-12	128
4473-N	128
4474YEL	102
4475GRN	102
4476BLU	102
4477PUR	102
4477V10	102A
4478	129
4483	128
4484	100
4484-1	106
4484-2	106
4485	100
4485-1	106
4486	100
4490	128
4490-1	108
4490-7	152
4491-4	130
4491-5	152
4491-6	184
4491-7	130
4491-8	152
4491-9	184
4501	126
4509	126
4510B	4510B
4511	4511B
4511B	4511B
4514B	4514B
4515B	4515B
4516	4516B
4516B	4516B
4545	126
4545BLU	126
4545WHT	126
4552	144A
4553BLU	102
4553BRN	102
4553GRN	102
4553ORN	102
4553RED	102
4553V10	102A
4553YEL	102
4562	102
4563	102
4564	102
4565	102
4567	102
4570	121
4573	105
4582BRN	121
4583RED	121
4584GRN	121
4586	126
4587	108
4589	126
4590	106
4594	123
4595	126
4596	102
4597	105
4597GRN	105
4597RED	105
4603	126
4604	126
4605	126
4605RED	126
4607	102
4608	121
4619RED	121
4620GRN	121
4621	126
4622	105
4623	127
4624	123
4627	102
4630	123
4632	126
4640	179
4640P	179
4648	154
4649	121
4652	127
4653	139A
4663	147A
4677	126
4684-120-3	108
4685-285-3	108
4686-81-2	102A
4686-81-3	102A
4686-82-3	123A
4686-87-3	117
4686-89-3	125
4686-95-3	108
4686-97-3	125
4686-105-3	125
4686-106-3	125
4686-107-3	108
4686-108-3	108
4686-112-3	108
4686-114-3	108
4686-116-3	117
4686-118-3	108
4686-119-3	108
4686-120-3	108
4686-126-3	108
4686-127-3	108
4686-130-3	175
4686-131-3	108
4686-132-3	123A
4686-139-3	125
4686-140-3	108
4686-143-3	123A
4686-144-3	123A
4686-145-3	194
4686-147-3	117
4686-148-3	117
4686-149-3	116
4686-150-3	117
4686-151-3	117
4686-163-3	102A
4686-169-3	108
4686-170-3	129
4686-171-3	108
4686-172-3	108
4686-173-3	123A
4686-177-3	117
4686-179-3	125
4686-182-3	128
4686-183-3	123A
4686-184-3	125
4686-186-3	125
4686-189-3	125
4686-195-3	102A
4686-196-3	102A
4686-199-3	125
4686-201-3	125
4686-207-3	108
4686-208-3	108
4686-209-3	108
4686-210-3	225
4686-212-3	125
4686-213-3	121
4686-224-3	108
4686-226-3	175
4686-227-3	502
4686-228-3	108
4686-229-3	129
4686-230-3	129
4686-231-3	123A
4686-232-3	154
4686-234-3	196
4686-235-3	129
4686-238-3	129
4686-244-3	108
4686-251-3	108
4686-252-3	191
4686-256-1	126
4686-256-2	126
4686-256-3	126
4686-257-3	123A
4689	128
4699	150A
4700	101
4701	130
4702	179
4704	150A
4705	123
4706	108
4709	108
4714	123
4715	130
4715A	130
4722	121
4722BLU	121
4722GRN	121
4722ORN	121
4722PUR	121
4722RED	121
4722YEL	121
4727	121
4728	151A
4729	179
4730	121
4732	123A
4733	123A
4734	123A
4737	123A
4740	5125A
4745	196
4756	161
4765	123A
4768	123A
4778-8(RCA)	156
4781	197
4789	107
4792	6400
4793(KLH)	722
4794(KLH)	781
4795	726
4795(KLH)	726
4800-200	102A
4800-220	102A
4800-221	102A
4800-222	102A
4800-223	131MP
4800-224	507
4801-0000-001	159
4801-0000-003	123A
4801-0000-010	123A
4801-0000-016	123A
4801-0000-018	229
4801-0000-035	108
4801-0000-060	159
4801-0000-095	161
4801-0000-100	123A
4801-00154	177
4801-00628	109
4801-00629	109
4801-00801	139A
4801-1100-011	121
4801-1284-100	159
4801-1284-200	106
4802-0000-002	184
4802-00002	108
4802-00003	123A
4802-00004	159
4802-00005	130
4802-00005A	130
4802-00006	123A
4802-00007	195A
4802-00008	237
4802-00009	123A
4802-00010	132
4802-00012	123A
4802-00014	289
4802-00015	123A
4802-00016	300
4802-00017	195A
4802-00019	237
4802-2000-012	116
4802-2000-019	116
4802-3268-000	299
4802-3274-200	182
4804-3267-901	299
4805-1241-200	519
4806-0000-004	116
4806-0000-005	156
4807-1233-900	177
4808-0000-007	135A
4808-0000-009	5072A
4808-0000-012	137A
4808-0000-037	5090A
4809-0000-001	610
4811-0000-015	312
4811-0000-025	312
4815	159
4819	154
4820	108
4820-0201	519
4821	108
4821-0000-024	351
4821-0000-045	352
4821-0644-011	350
4821-0644-012	320
4822-130-30132	5071A
4822-130-30192	116
4822-130-30193	136A
4822-130-30256	116
4822-130-30259	116
4822-130-30261	167
4822-130-30264	135A
4822-130-30281	109
4822-130-30284	5069A
4822-130-30287	138A
4822-130-30301	109
4822-130-30311	109
4822-130-30312	109
4822-130-30414	166
4822-130-40095	158
4822-130-40096	103A
4822-130-40132	130
4822-130-40182	177
4822-130-40184	123A
4822-130-40212	155
4822-130-40213	131
4822-130-40214	107
4822-130-40215	107
4822-130-40216	107
4822-130-40229	109
4822-130-40233	104
4822-130-40235	102A
4822-130-40236	102A
4822-130-40252	160
4822-130-40255	160
4822-130-40304	161
4822-130-40311	107
4822-130-40312	107
4822-130-40313	107
4822-130-40314	103A
4822-130-40315	159
4822-130-40317	107
4822-130-40318	107
4822-130-40319	103A&158(CP)
4822-130-40329	103A&158
4822-130-40343	123A
4822-130-40354	123A
4822-130-40356	128
4822-130-40361	123A
4822-130-40369	106
4822-130-40382	102A&103A
4822-130-40385	131&155(CP)
4822-130-40441	160
4822-130-40454	123A
4822-130-40456	158
4822-130-40477	106
4822-130-40508	106
4822-130-40537	184
4822-130-40614	106
4822-130-50221	116
4822-130-50228	168
4823-0018	175
4823-0031-01	234
4824-0014	199
4824-0014-02	199
4824-28-1	311
4824-33	128
4825	229
4826	108
4828-4	109
4837	108
4838	154
4839	123A
4840	123A
4841	123A
4842	123A
4843	154
4844	159
4845	108
4846-1	949
4846-2	949
4850	141A
4851	107
4851(Zener)	141A
4852	123A
4853	154
4854	123A
4855	108
4856-0101	123A
4856-0106	159
4856-0107	123A
4856-0109	123A
4856-0110	123A
4857	229
4858	147A
4860-1-3	311
4872	124
4882	130
4885	5663
4888A	121
4888B	121
4907-976	102A
5000	761
5001	6400
5001-002	123A
5001-004	299
5001-010	300
5001-014	123A
5001-020	123A
5001-021	289
5001-032	229
5001-037	229
5001-038	199
5001-043	199
5001-044	299
5001-046	222
5001-047	133
5001-048	159
5001-049	226MP
5001-050	235
5001-053	152
5001-064	186A
5001-066	159
5001-068	282
5001-069	123A
5001-070	289
5001-071	236
5001-072	123A
5001-074	199
5001-075	186A
5001-080	109
5001-083	177
5001-089	125
5001-107	177
5001-117	116
5001-120	519
5001-125	139A
5001-128	519
5001-129	116
5001-130	5072A
5001-131	137A
5001-134	109
5001-135	116
5001-141	109
5001-143	5075A
5001-144	177
5001-145	177
5001-146	519
5001-152	139A
5001-156	177
5001-160	136A
5001-161	109
5001-162	177
5001-163	116
5001-164	177
5001-196	614
5001-197	135A
5001-505	199
5001-506	289
5001-508	130
5001-509	159
5001-510	108
5001-511	199
5001-512	103A
5001-513	295
5001-514	235
5001-517	306
5001-539	297
5001-540	290
5001-541	229
5001-542	123A
5001-543	229
5001-544	229
5001-545	199
5002-001	724
5002-007	1100
5002-030	1167
5002-031	1155
5002(Thomas)	754
5005	761
5005(Thomas)	761
5007	761
5007(Thomas)	761
5009	767
5009(Thomas)	767
5036-1	223
5036-2	223
5051-300-10150	116
5052	102
5059-0236	159
5065	123A
5082-7730	3061
5082-7731	3052
5082-7740	3057
5084-600-452i-0	519
5084-600-4521-0	519
5085	160
5093	108
5096	132
5101N60	110
5101S34	109
5113T	704
5118	219
5120A90	109
5122	142A
5124	145A
5130	146A
5132	147A
5139	149A
5142	150A
5145	151A
5158	797
5158-1	797
5158-1(RCA)	797
5158-2	797
5158(RCA)	728
5159-1	797
5203N1	178MP
5203RNI	115
5205NI	116
5210DC-1	5801
5213-4000	5882
5222	142A
5224(SCR)	5527
5224(Zener)	145A
5226-1	159
5226-2	123A
5230	146A
5232	147A
5233-7100	7411
5239	149A
5242	150A
5245	151A
5253	104
5258	128
5259	196
5300-2	5626
5300-3	5626
5300-82-3	125
5300-82-4	125
5300-82-1003	117
5300-86-1	116
5300-88-1	116
5300-88-2	117
5300-88-3	125
5300-88-1002	125
5300-88-1003	125
5300-88-1004	125
5300-94-1	116
5300-95-1	116
5300-98-1	116
5300-99-1	116
5300-99-3	116
5300-99-4	116
5301-06-1	116
5301-06-1001	125
5301-09-1	116
5301-11-1	117
5301-11-1001	125
5301-13-1	116
5301-19-1	503
5301-20-1	116
5301-22-1	117
5301-32-1	118
5301-36-T	125
5303-1	5642
5303-2	5642
5313-461B	108
5320-003	175
5324	5130A
5325	5026A
5326	5133A
5327	5135A
5328	5136A
5329	5138A
5330	5139A
5331	5141A
5332	5142A
5333	5143A
5334	5144A
5335	5145A
5336	5146A
5337	5147A
5340	5151A
5341	5152A
5342	5153A
5343	5155A
5344	5156A
5345-1	1174

To Be Replaced	ECG Replacement
5345(Zener)	5157A
5346	5158A
5348	5161A
5350	5164A
5351	5166A
5361-1N60P	110
5380-21	116
5380-71	123A
5380-72	123A
5380-73	128
5380-73(Power)	175
5402	156
5416	116
5459	133
5464	102A
5489(KLH)	718
5504	181
5505	181
5506	5002A
5507	5004A
5508	5005A
5509	5006A
5510	5007A
5511	5008A
5512	5009A
5513	5010A
5514	5011A
5515	5013A
5516	5014A
5517	5015A
5518	5016A
5519	5018A
5520	5019A
5521	5020A
5522	5021A
5522-8	5802
5523	5022A
5524	5024A
5525	5025A
5526	5027A
5527	5029A
5528	5030A
5529	5031A
5530	5033A
5531	5035A
5532	5036A
5533	5037A
5534	5038A
5535	5039A
5536	5040A
5537	5041A
5538	5042A
5539	5044A
5540	5045A
5541	5046A
5553	128
5565-001	130
5601-MS	116
5601-NI	116
5608-1	814
5609-1	748
5611-628	159
5611-628D	159
5611-628F	159
5611-642(W)	123A
5611-673	159
5611-673D	159
5611-695	193
5611-695C	193
5611-733(Q)	294
5612-75C	102A
5612-77C	102A
5612-370	102A
5612-370C	102A
5612-561C	298
5613-1S2076	177
5613-46B	108
5613-458	289
5613-458B	289
5613-458C	289
5613-458D	289
5613-458LGC	289
5613-460	107
5613-460A	107
5613-460B	107
5613-460C	107
5613-461	229
5613-461C	229
5613-535	107
5613-535A	107
5613-535B	107
5613-535C	107
5613-558C	123A
5613-710B	123AP
5613-710(B)	123AP
5613-710C	123AP
5613-710-C	123AP
5613-710D	123AP
5613-710E	123AP
5613-711	123A
5613-711E	123A
5613-711F	199
5613-711G	199
5613-828	199
5613-828S	199
5613-839(H)	123A
5613-870	123A
5613-870F	123A
5613-871	199
5613-871F	199
5613-945(P)	199
5613-1209	192
5613-1209C	192
5613-1213D	128
5613-1312	199

To Be Replaced	ECG Replacement
5613-1312G	199
5613-1312H	199
5613-1327	199
5613-1327T	199
5613-1335	123A
5613-1335D	123A
5613-1342	229
5613-1342B	229
5613-1342C	229
5613-1359B	229
5613-1359C	229
5613-1674(K)	229
5613-1674(L)	229
5613-1684	199
5613-1684T	199
5613-1788	128
5613-1788R	128
5613-1846	306
5613-1846Q	306
5613-1964	236
5613-2086	293
5613-4581C	123A
5614-77C	103A
5614-227(W)	159
5615-1	1176
5615-2	1176
5616-2SK33D	312
5616-2SK33(D)	312
5616-2SK33E	312
5616-2SK33(E)	312
5616-2SK49(E)	312
5617-2	1175
5624	1253
5631-0A90	109
5631-1K34A	109
5631-1N34A	109
5631-1N60	109
5631-1N60P	109
5631-1S2076	177
5631-1S2473	519
5631-2-1K261	110MP
5631-20A90	110
5631-MA150	177
5632-51B01-02	116
5632-AN217	1060
5632-AN217BB	1060
5632-HZ11A	140A
5632-S1B01-02	116
5632-SIB01-02	116
5632-V03C	125
5632-W03B	116
5632-W06A	116
5632-W06B	116
5632-WO3B	116
5633-MV201	611
5635-HZ11A	140A
5635-MZ301A	140A
5635-MZ309B	139A
5635MZ309B	139A
5635-MZ310A	140A
5635-ZB1-10	140A
5636-1S953	177
5641-MV11	116
5641-VD1220	605
5652-AN217	1060
5652-AN217BB	1060
5652-HA1156	801
5652-HA1325	1238
5652-M51513L	1256
5654-M53203P	7403
5654-UPD4011C	4011B
5661-C6B3	5400
5680	129
5683-1S2790W	613
5701	159
5710	229
5714	289
5721	123A
5723P	801
5724P	801
5757	781
5766-25	102
5815	723
5847(RCA)	184
5861	125
5880	1198
5909-001	181
5923	116
5932	789
6001	1115
6003	133
6007-3	708
6008	160
6008(E.F.Johnson)	160
6013	312
6019	177
6099-2	196
6100	158
6100-35	158
6102	178MP
6115	5072A
6115(G.E.)	5072A
6117-1	278
6129-P1	519
6136	123A
6151(RCA)	128
6154	126
6155	126
6158	108
6158-3	108
6162	126
6171-18	506
6171-28	116
6181-1	154
6185-3	108

To Be Replaced	ECG Replacement
6201	159
6221	221
6284	128
6285	129
6313	160
6343-1	123A
6367	123A
6367-1	123A
6377-1(Sylvania)	131
6377-2(Sylvania)	155
6380-1	130
6380-3	152
6381-1	175
6381-2	152
6382-2	152
6401	163A
6432-3	139A
6440	102
6445	100
6452	102
6507(Airline)	108
6514	123A
6531	107
6551	722
6629	125
6629-A05	125
6651-486	128
6818	105
6854K90-062	159
6854K90-074	123A
6855K90	106
6900K91-002	9944
6900K91-003	9946
6900K91-004	9962
6900K91-006	9936
6900K91-007	9932
6900K91-009	9157
6900K93-001	9951
6900K93-002	9941
6900K95-001	9099
6900K95-002	9093
6954K90-074	123A
6990	160
7001(DARLINGTON)	172A
7001(E.F. Johnson)	123A
7005G(Lowrey)	123A
7049	1115
7104-1	352
7112	177
7112(Transistor)	229
7113	123A
7114	108
7115(IC)	708
7115(STELMA)	708
7115(Transistor)	108
7116	229
7117(GE)	108
7118	108
7120	108
7120A(G.E.)	712
7120S	123A
7122	108
7122-5	123A
7123	108
7124	108
7125	108
7126	108
7127	108
7128	108
7129	123A
7131	108
7132	108
7133	108
7134	108
7140	541
7140B	548
7149A	712
7161	752
7161(Wurlitzer)	752
7171	123A
7171(GE)	123A
7172	123A
7172-54	105
7173	108
7174	108
7175	108
7176	123A
7177	108
7177S	108
7178	108
7204A	804
7204A(Sears)	804
7206-0	120
7209A	120
7211-9	116
7212-3	116
7212-3A	116
7213	152
7213-0	117
7213-7	116
7213(Diode)	116
7214	108
7214-6	125
7214A	130
7214(Lowrey)	130
7215	108
7215-0	102A
7215-1	125
7215-2	125
7216	108
7217	108
7218	108
7219	108

To Be Replaced	ECG Replacement
7219-3	131
7220	108
7221	108
7221A	712
7232	108
7233	229
7233S	229
7234	108
7235	108
7236	229
7236S	229
7237	108
7238	108
7239	102
7252	152
7253(Lowrey)	154
7261	229
7262	108
7263	229
7264	229
7301-1	129
7303-1	159
7303-2	159
7306	123A
7306-1	123A
7306-3	123A
7306-4	123A
7306-5	123A
7306-7	123A
7310(G.E.)	124
7311	124
7311(GE)	124
7312	175
7313(IC)	790
7313(Transistor)	124
7314	116
7316	188
7317	124
7318	123A
7318-1	297
7318-2	123A
7320-1	130
7321	194
7322	175
7325	128
7325-1	128
7329	128
7330	159
7330-2	159
7330-3	159
7330-4	159
7330-6	159
7334	128
7334-1	123A
7335	165
7338-6	128
7339	159
7339-1	159
7340	106
7340-2	123A
7341	505
7342-1(Diode)	116
7342-1(Transistor)	128
7344	177
7344-1	128
7344-2	128
7344(Transistor)	128
7345-2	128
7346-1	123A
7347	159
7347-1	159
7349	128
7351	185
7352-2	171
7352-5	171
7356-2	130
7358-1	152
7359-1	185
7362-1	198
7362-4	198
7363-1	159
7364-1	196
7364-6053P1	195A
7366	165
7370	165
7372-1	222
7381-2	128
7398-1	190
7398-6117P1	123A
7398-6118P1	123A
7398-6119P	123A
7398-6119P1	123A
7398-6120P	300
7398-6120P1	300
7399-4	152
7400	7400
7400-6A	7400
7400-9A	7400
7400/9N00	7400
7400A	7400
7400N	7400
7400PC	7400
7401-1	159
7401-6A	7401
7401-9A	7401
7401PC	7401
7402	708
7402-1	159
7402-6A	7402
7402-9A	7402
7402PC	7402
7402(TTL)	7402
7403	505
7403-6A	7403
7403-9A	7403

To Be Replaced	ECG Replacement
7403PC	7403
7404-6A	7404
7404-9A	7404
7404A	7404
7404PC	7404
7405	7405
7405-6A	7405
7405-9A	7405
7405PC	7405
7406PC	7406
7407A	7407
7407PC	7407
7408-6A	7408
7408-9A	7408
7408A	7408
7408PC	7408
7409PC	7409
7410-6A	7410
7410-9A	7410
7410PC	7410
7411-6A	7411
7411-9A	7411
7411PC	7411
7412	7412
7412PC	7412
7413	184
7413PC	7413
7414	152
7414PC	7414
7416PC	7416
7417PC	7417
7419	708
7420	153
7420-6A	7420
7420-9A	7420
7420(IC)	7420
7420PC	7420
7421	7421
7422	7422
7422PC	7422
7423	708
7423PC	7423
7425	108
7425PC	7425
7426	108
7426PC	7426
7427	108
7427PC	7427
7428A	7428
7428(IC)	7428
7428(Transistor)	108
7429	123A
7430	123A
7430-6A	7430
7430-9A	7430
7430PC	7430
7431	123A
7432	123A
7432PC	7432
7433(IC)	7433
7433(Transistor)	123A
7437(GE)	198
7437PC	7437
7438PC	7438
7439DC	7439
7439PC	7439
7440	708
7440-6A	7440
7440-9A	7440
7440PC	7440
7441-6A	7441
7441-9A	7441
7441DC	7441
7441PC	7441
7442DC	7442
7442PC	7442
7443DC	7443
7443PC	7443
7444DC	7444
7444PC	7444
7445DC	7445
7445PC	7445
7446ADC	7446
7446APC	7446
7446PC	7446
7447	7447
7447BDC	7447
7447BPC	7447
7447DC	7447
7447PC	7447
7448DC	7448
7448PC	7448
7450-6A	7450
7450-9A	7450
7450PC	7450
7451-6A	7451
7451-9A	7451
7451PC	7451
7453-6A	7453
7453-9A	7453
7453PC	7453
7454-6A	7454
7454-9A	7454
7454PC	7454
7460-6A	7460
7460-9A	7460
7460PC	7460
7470-6A	7470
7470-9A	7470
7470PC	7470
7472-6A	7472
7472-9A	7472
7472PC	7472
7473-6A	7473
7473-9A	7473

To Be Replaced	ECG Replacement
7473PC	7473
7474	7474
7474-6A	7474
7474-9A	7474
7474/9N74	7474
7474PC	7474
7475-6A	7475
7475-9A	7475
7475DC	7475
7475PC	7475
7476	7476
7476-6A	7476
7476-9A	7476
7476PC	7476
7480DC	7480
7480PC	7480
7481	7481
7481CDC	7481
7481PC	7481
7482-6A	7482
7482-9A	7482
7482DC	7482
7482PC	7482
7483DC	7483
7483PC	7483
7485DC	7485
7485PC	7485
7486PC	7486
7490	7490
7490-6A	7490
7490-9A	7490
7490DC	7490
7490PC	7490
7491DC	7491
7491PC	7491
7492-6A	7492
7492-9A	7492
7492DC	7492
7492PC	7492
7493	7493A
7493-6A	7493A
7493-9A	7493A
7493/9393	7493A
7493APC	7493A
7493DC	7493A
7493PC	7493A
7494DC	7494
7494PC	7494
7495DC	7495
7495PC	7495
7496DC	7496
7496PC	7496
7501	123A
7502	123A
7503	159
7505	123A
7506	123A
7507	128
7508	129
7509	123A
7510	125
7510(Transistor)	175
7513	186
7514	130
7515	123A
7516	123A
7517	123A
7517S	123A
7518	123A
7519	123A
7543BPC	75453B
7550	5066A
7553	188
7554	139A
7568	116
7574	138A
7585	123A
7586	123A
7586(GE)	123A
7587	123A
7587(GE)	123A
7588	123A
7588(GE)	123A
7589	123A
7590	123A
7590(GE)	123A
7591(GE)	123A
7593-2	108
7623	159
7626	159
7637	123A
7638	294
7638(IC)	7420
7639	294
7640	128
7641	123A
7642	108
7675	123A
7676	123A
7701	125
7702-1A	125
7704-1	125
7706-1	125
7707	5065A
7708	5111A
7708-1	125
7709	5112A
7710	5112A
7711	5114A
7711-1	125
7712	5115A
7712-1	125
7713	135A
7713-1	125
7714	5117A

To Be Replaced	ECG Replacement
7715	5119A
7717	5121A
7718	5122A
7719	5124A
7720	5125A
7721	5126A
7724	5130A
7725	5131A
7726	5133A
7727	5135A
7728	5136A
7729	5137A
7730	5139A
7731	5141A
7732	5142A
7733	5143A
7734	5144A
7735	5145A
7736	5146A
7737	5147A
7738	5148A
7739	5150A
7740	5151A
7741	5152A
7805KC	309K
7805UC	960
7808	964
7808UC	964
7810	108
7811	108
7812	108
7813	108
7814	108
7815	108
7816	123A
7817	123A
7818	123A
7824UC	972
7845-1	346
7846-1	348
7846-2	348
7847-2	351
7847-3	351
7847-4	350
7874	761
7874(Wurlitzer)	752
7885-1	181
7885-2	181
7885-3	181
7909	128
7920-1	196
7921	5802
7921-1	197
7962	116
7964-1	350
7964-2	350
7964-3	350
7964-4	350
7991	199
7992	123A
7993	158
8000-00001-068	102A
8000-00003-033	123A
8000-00003-034	233
8000-00003-035	289
8000-00003-036	289
8000-00003-037	290
8000-00003-038	102A
8000-00003-039	102A
8000-00003-040	131
8000-00003-041	299
8000-00003-042	299
8000-00003-043	299
8000-00003-044	116
8000-00003-045	109
8000-00003-046	177
8000-00004-044	116
8000-00004-045	109
8000-00004-060	109
8000-00004-061	177
8000-00004-062	177
8000-00004-063	109
8000-00004-064	116
8000-00004-065	139A
8000-00004-066	177
8000-00004-067	177
8000-00004-068	116
8000-00004-079	123A
8000-00004-080	133
8000-00004-081	132
8000-00004-082	123A
8000-00004-083	237
8000-00004-084	237
8000-00004-085	289
8000-00004-086	103A
8000-00004-087	300
8000-00004-088	102A
8000-00004-089	199
8000-00004-090	724
8000-00004-85	123A
8000-00004-184	177
8000-00004-185	186
8000-00004-239	137A
8000-00004-241	130
8000-00004-242	289
8000-00004-243	123A
8000-00004-298	229
8000-00004-305	703A
8000-00004-306	1045
8000-00004-307	1075A
8000-00004-308	1021
8000-00004-P079	123A
8000-00004-P080	132
8000-00004-P081	132

To Be Replaced	ECG Replacement
8000-00004-P082	128
8000-00004-P083	237
8000-00004-P084	237
8000-00004-P085	289
8000-00004-P086	289
8000-00004-P088	102A
8000-00004-P089	159
8000-00004-P090	724
8000-00004-P185	184
8000-00005-001	132
8000-00005-002	123A
8000-00005-003	199
8000-00005-004	199
8000-00005-005	199
8000-00005-007	123A
8000-00005-008	175
8000-00005-009	195A
8000-00005-010	195A
8000-00005-011	237
8000-00005-012	175
8000-00005-014	1104
8000-00005-015	109
8000-00005-016	109
8000-00005-017	109
8000-00005-018	109
8000-00005-019	138A
8000-00005-020	137A
8000-00005-021	139A
8000-00005-022	116
8000-00005-023	109
8000-00005-055	123A
8000-00005-152	116
8000-00006-001	195A
8000-00006-002	237
8000-00006-003	123A
8000-00006-004	159
8000-00006-005	107
8000-00006-006	130
8000-00006-007	109
8000-00006-008	177
8000-00006-009	139A
8000-00006-010	147A
8000-00006-011	1000
8000-00006-077	109
8000-00006-146	137A
8000-00006-147	125
8000-00006-190	130
8000-00006-201	116
8000-00006-230	237
8000-00006-230(3)	282
8000-00006-231	116
8000-00006-232	139A
8000-00006-278	295
8000-00006-279	235
8000-00006-280	123A
8000-00006-281	519
8000-00009-089	199
8000-00009-174	123A
8000-00009-177	229
8000-00009-178	132
8000-00009-280	123A
8000-0001-017	133
8000-0004-042	109
8000-0004-063	109
8000-0004-066	177
8000-0004-086	103A
8000-0004-P083	195A
8000-0004-P084	195A
8000-0004-P090	724
8000-0004-P185	186
8000-0004-P060	109
8000-0004-P061	177
8000-0004-P062	177
8000-0004-P063	109
8000-0004-P064	177
8000-0004-P065	139A
8000-0004-P066	177
8000-0004-P067	116
8000-0004-P068	116
8000-0004-P079	123A
8000-0004-P080	133
8000-0004-P081	132
8000-0004-P082	123A
8000-0004-P083	128
8000-0004-P084	128
8000-0004-P085	123A
8000-0004-P086	103A
8000-0004-P088	102A
8000-0004-P089	159
8000-0005-001	132
8000-0005-002	107
8000-0005-003	107
8000-0005-007	123A
8000-0005-008	130
8000-0005-009	123A
8000-0005-010	128
8000-0005-011	128
8000-0005-015	109
8000-0005-016	109
8000-0005-017	109
8000-0005-018	109
8000-0005-019	138A
8000-0005-020	137A
8000-0005-021	139A
8000-0005-022	116
8000-0005-023	109
8000-0009-089	123A
8000-00010-017	133
8000-00010-109	177
8000-00011-004	123A
8000-00011-041	116
8000-00011-042	177
8000-00011-043	139A
8000-00011-044	116
8000-00011-045	601
8000-00011-046	109
8000-00011-047	123AP
8000-00011-048	123A
8000-00011-049	289
8000-00011-050	152
8000-00011-051	195A
8000-00011-052	237
8000-00011-053	222
8000-00011-054	132
8000-00011-055	132
8000-00011-060	109
8000-00011-086	103A
8000-00011-103	138A
8000-00011-104	116
8000-00011-105	156
8000-00011-151	195A
8000-00011-160	614
8000-00011-166	614
8000-00012-038	112
8000-00012-039	123A
8000-00012-040	192
8000-00012-041	703A
8000-00016-127	1108
8000-00028-037	229
8000-00028-038	289
8000-00028-039	236
8000-00028-040(NPN)	155
8000-00028-040(PNP)	153
8000-00028-041	152
8000-00028-042	7404
8000-00028-043	7493A
8000-00028-044	74145
8000-00028-045	177
8000-00028-046	109
8000-00028-047	140A
8000-00028-048(Bridge)	115
8000-00028-048(Diode)	116
8000-00028-206	123A
8000-00029-006	123A
8000-00029-007	123A
8000-00030-007	123A
8000-00030-008	315
8000-00030-009	103A
8000-00030-010	116
8000-00032-025	123A
8000-00032-026	161
8000-00032-027	103A
8000-00032-028	236
8000-00032-030	1058
8000-00032-031	724
8000-00035-001	116
8000-00035-002	116
8000-00035-003	229
8000-00038-001	235
8000-00038-002	974
8000-00038-003	74161
8000-00038-004	7400
8000-00038-005	74H22
8000-00038-006	7493A
8000-00038-007	7474
8000-00038-008	177
8000-00038-009	109
8000-00038-010	611
8000-00041-015	109
8000-00041-016	109
8000-00041-018	139A
8000-00041-019	177
8000-00041-040	229
8000-00041-041	199
8000-00041-042	199
8000-00041-043	186A
8000-00041-044	235
8000-00041-045	199
8000-00041-046	229
8000-00041-047	295
8000-00042-007	519
8000-00042-008	7400
8000-00042-009	7410
8000-00042-011	74193
8000-00042-013	222
8000-00042-014	6402
8000-00042-015	5401
8000-00043-019	229
8000-00043-020	158
8000-00043-021	139A
8000-00043-064	302
8000-00043-065	235
8000-00043-067	135A
8000-00043-068	139A
8000-00045-004	7447
8000-00047-007	519
8000-00047-011	139A
8000-00047-031	312
8000-00048-022	125
8000-00048-023	614
8000-00049-010	116
8000-00049-020	614
8000-00049-021	5010A
8000-00049-025	1254
8000-00049-027	1166
8000-00049-053	229
8000-00049-054	229
8000-00049-055	123A
8000-00049-056	159
8000-00049-057	123A
8000-00049-058	306
8000-00049-059	293
8000-00049-060	235
8000-00049-061	293
8000-00049-062	312
8000-00050-015	199
8000-00050-016	129
8000-00050-017	312
8000-00053-004	746
8000-00054-001	297
8000-00054-002	981
8000-00057-002	235
8000-00057-003	295
8000-00057-005	312
8000-00057-011	139A
8000-00058-001	123A
8000-00058-002	135A
8000-00058-004	140A
8000-00058-005	147A
8000-00058-006	746
8000-00058-007	74161
8000-00058-008	1260
8000-00058-009	1192
8000-004-P061	125
8000-004-P064	125
8000-004-P067	125
8000-004-P068	125
8000-004-P089	129
8000-0058-006	746
8003-114	123A
8003-115	116
8005-3	704
8005(Penncrest)	181
8007-0	704
8007-1	704
8007-3	704
8007-4	704
8008-1	704
8008-3	704
8009-0	704
8009-4	704
8010-52	177
8010-53	109
8010-171	1045
8010-172	1120
8010-173	132
8010-174	161
8010-175	161
8010-176	123A
8020-202	177
8020-203	116
8020-204	199
8020-205	123A
8020-206	152
8050C	289
8070-4	102A
8071-4	102A
8072-4	102A
8073-4	102A
8074-4	123A
8075-4	123A
8098	749
8122	108
8200-202	199
8200-203	199
8200-204	226
8210-1203	123A
8225P1	5626
8281	123A
8281-1	123A
8300-8	116
8301	159
8302	123A
8303	129
8304	128
8310	762
8319-001	130
8394	199
8400-1	129
8400-1A	129
8400-1B	129
8405	159
8440-121	133
8440-122	123A
8440-123	123A
8440-124	123A
8440-126	199
8440P1	912
8471(Sylvania)	188
8500-201	102A
8500-202	102A
8500-203	102A
8500-204	131
8500-206	116
8503	107
8504	123A
8509	123A
8517	293
8530	123A
8531	123A
8540	159
8550C	290
8554-9	128
8564-1	310
8564-5	310
8564-6	308
8564-7	310
8564-8	308
8600	123A
8601	159
8602	123A
8606	108
8607	108
8609	108
8611	108
8614 007 0	123A
8620	175
8624-003	129
8710-52	177
8710-53	109
8710-54	139A
8710-55	116
8710-161	132
8710-162	108
8710-163	123A
8710-164	123A
8710-165	123A
8710-166	123A
8710-167	123A
8710-168	123A
8710-169	159
8710-170	186
8710-171	1100
8710-172	1142
8800-201	116
8800-202	123A
8800-203	123A
8800-204	123A
8800-205	152
8800-206	116
8840-53	177
8840-54	109
8840-55	139A
8840-56	116
8840-161	132
8840-162	107
8840-163	123A
8840-164	123A
8840-165	123A
8840-166	123A
8840-167	123A
8840-168	123A
8840-169	186
8840-170	1100
8840-171	720
8864-1	116
8867	159
8868-6	128
8868-7	199
8868-8	123A
8880-3	128
8883-2	121
8883-4	128
8886-2	123A
8888-00005-013	295
8910-52	177
8910-53	110
8910-54	5072A
8910-55	116
8910-141	132
8910-142	229
8910-143	123A
8910-144	199
8910-145	123A
8910-146	186A
8910-147	1100
8910-148	1142
8999-115	104
8999-201	116
8999-202	102A
8999-203	158
8999-205	116
9005-0	121
9011	229
9011E	229
9011F	229
9011G	229
9011H	229
9011(Transistor)	123A
9012	290
9012F	159
9012HE	102A
9012HF	102A
9012HF(Midland)	159
9012HG(Midland)	159
9012R	159
9013F	123A
9013G	128
9013H	123A
9013HF	123A
9013HG	123A
9013HH	123A
9014	123A
9014B	123A
9014C	123A
9014D	123A
9015	294
9015C	159
9016	229
9016D	229
9016E	229
9016F	229
9016G	229
9018	229
9018D	229
9018E	229
9018EF	229
9018F	229
9018G	229
9033	123A
9033-1	123A
9033-1(BROWN)	123AP
9033-2	199
9033-2(WHITE)	123AP
9033-3	199
9033-4	199
9033-5	199
9033Brown	123A
9033G(Sylvania)	123A
9033Green	199
9033Orange	199
9033Q	199
9033Red	199
9033(Sylvania)	123A
9033White	199
9050-1	910D
9093-1-6A	9093
9093-9-6A	9093
9093-9-7A	9093
9093DC	9093
9093PC	9093
9094-1-6A	9094
9094-9-6A	9094
9094-9-7A	9094
9094DC	9094
9094PC	9094
9097-1-6A	9097
9097-9-6A	9097
9097-9-7A	9097
9097DC	9097
9097PC	9097
9098	171
9099-1-6A	9099
9099-9-6A	9099
9099-9-7A	9099
9099DC	9099
9099PC	9099
9100-1	116
9109	9109
9109DC	9109
9110DC	9110
9111DC	9111
9112DC	9112
9128-1503-001	177
9135PC	9135
9137-C-1004	9945
9137-C-1020	9962
9144-60	787
9144-61	788
9157PC	9157
9158PC	9158
9279	128
9300	108
9300-5	116
9300-6	116
9300-7	116
9300A	108
9300B	108
9300Z	108
9301-1	116
9302-2	117
9302-2A	117
9302-3	116
9307	7448
9310	74160
9311	74154
9314	108
9315DC	7441
9315PC	7441
9316	74161
9316/74161	74161
9317B	7446
9317C	7446
9330-006-11112	116
9330-011-70112	102A
9330-092-90112	137A
9330-228-60112	177
9330-229-20112	116
9330-229-60112	107
9330-229-70112	107
9330-688-30112	199
9330-767-60112	159
9330-908-10112	159
9341DC	74181
9341PC	74181
9342DC	74182
9345DC	7445
9345PC	7445
9348-3	116
9352DC	7442
9352PC	7442
9353DC	7443
9353PC	7443
9354DC	7444
9354PC	7444
9357A	7446
9357ADC	7446
9357APC	7446
9357B	7447
9357BDC	7447
9357BPC	7447
9358	7448
9358DC	7448
9358PC	7448
9359	7449
9360DC	74192
9360PC	74192
9366DC	74193
9366PC	74193
9367-1	128
9375DC	7475
9375PC	7475
9377	7497
9380DC	7480
9380PC	7480
9382DC	7482
9382PC	7482
9383DC	7483
9383PC	7483
9385DC	7485
9385PC	7485
9390	102
9390DC	7490
9390PC	7490
9391	102
9391DC	7491
9391PC	7491
9392DC	7492
9392PC	7492
9393	7493A
9393/7493	7493A
9393DC	7493A
9393PC	7493A
9394DC	7494
9394PC	7494
9395DC	7495
9395PC	7495
9396DC	7496
9396PC	7496
9400-8	102A
9400-9	102A
9401-7	102A
9403-2	121
9403-3	160
9403-6	160
9403-7	102A
9403-8	126
9403-9	102A
9404-0	121
9404-2	128
9404-3	195A
9404-9	175
9405-0	128
9405-1	128
9405-2	129
9409-4	175
9410A	123A
9426B	108
9426C	108
9440	177
9501	199
9502	199
9510-1	160
9510-2	160
9510-3	126
9510-7	160
9513	108
9517-4	107
9521	722
9550-1	766A
9564	102A
9582	185
9600	123A
9600-5	123A
9600C	108
9600F	108
9600G	108
9600H	108
9601	108
9601-12	108
9603	74121
9604E	108
9604F	108
9606	5014A
9607	5015A
9617K	128
9618	229
9623F	108
9623G	108
9623H	108
9625F	108
9625H	108
9630C	108
9644	177
9646	177
9650-001	116
9652H	159
9654-0330.31	152 & 153
9654-0331.31	152 & 153
9664PC	75492B
9665PC	2011
9666PC	2012
9667PC	2013
9668PC	2014
9692-1	723
9693-1	787
9694-1	724
9696H	128
9803	177
9842FF	723
9861B-43	109
9920-3-6	125
9920-4	102A
9920-5	102A
9920-6-1	123A
9920-6-2	123A
9920-7-2	123A
9921-7	102A
9921-8	102A
9923	9923
9923(Regency)	9923
9923-U8A99238X	9923
9925-0	121
9925-2	124
9925-2-1	124
9925-2-2	124
9942PC	74182
9970	5004A
9971	5006A
9972	5008A
9973	5010A
9981	5112A
9982	5114A
9983	5116A
9984	5119A
9992	5241A
9993	5243A
9994	5246A
10003	181
10010	5870
10020	5074A
10031	113
10032	102A
10036	102A
10036-001	129
10037	102A
10038	102A
10039	102A
10100	125
10180	116
10181	109
10226/2	123A
10300	159
10300-12	129
10302-01	7430
10302-02	7420
10302-03	7410
10302-04	7400
10302-05	7451
10302-06	7405
10416-009	123A
10416-010	128
10650A01	778
10655A01	798
10655A01-3	798
10655A03	738
10655A03A	738
10655A05	749
10655A13	748
10655B01	798
10655B02	748
10655B03	738
10655B13@	712
10655B14	831
10655C05	749
10658A01	788
10795-5	9945
10795-6	9946
10795-8	9962
10795-9	9093
10795-10	9099
10895	519
10909	116
11000	234
11200-1	7410
11202-1	7404
11203-1	7493A
11204-1	74193
11205-1	7420
11206-1	7470
11207-1	7402
11208-1	7430
11209-1	7483
11211-1	7409
11212-1	7472
11213-1	7474
11214-1	7440
11216-1	7400
11233-2	7454
11236-1	128
11236-2	224
11236-3	130
11252	109
11252-0	108
11252-1	108
11252-2	108
11252-3	123A
11252-4	121
11252-5	128
11252-6	224
11252-7	224
11273-1	74121
11274-1	7403
11276-1	7496
11282-6	116
11303-9	116
11305-0001	519
11332-1	116
11339-2	116
11339-8	108
11352-78	519
11386-9	505
11393-8	108
11399-8	117
11401-3	116
11426-7	108
11503-9	116
11506-3	121
11522-5	123A
11522-7	160
11522-8	160
11522-9	160
11526-8	121
11526-9	121
11527-5	126
11528-1	121MP
11528-2	121MP
11528-3	121MP
11528-4	121MP
11555-9	116
11559-9	116
11586-7	117
11587-5	123A
11605-2	116
11606-8	127
11607-2	126
11607-3	108
11607-4	123A
11607-5	124
11607-8	123A
11607-9	108
11608-0	108
11608-2	108
11608-3	108
11608-5	123A
11608-6	127
11608-7	127
11608-8	127
11608-9	127
11609-1	102A
11609-2	123A
11619-8	108
11619-9	108
11620-0	108
11620-1	108

To Be Replaced	ECG Replacement
11620-2	160
11620-3	102A
11620-6	102A
11620-7	160
11620-8	160
11620-9	160
11658-8	123A
11668-3	160
11668-4	160
11668-5	102A
11668-6	102A
11668-7	103A
11675-6	126
11675-7	102A
11687-5	123A
11699-7	102A
11746	116
12011	177
12020-02	152
12044-0021	175
12047-0023	192
12048-0011	129
12101	177
12110-0	100
12110-3	100
12110-4	100
12110-5	100
12110-6	102A
12110-7	102A
12112-0	102A
12112-8	100
12112-C	123A
12112-D	123A
12112-E	123A
12112-F	123A
12113-5	160
12113-7	160
12113-8	160
12113-9	160
12114-8	102A
12115-0	160
12115-7	160
12116-1	100
12116-2	100
12116-4	102A
12117-9	100
12118-0	100
12118-4	102A
12118-6	100
12118-9	126
12119-0	160
12119-1	102A
12119-2	102A
12122-5	102A
12122-6	102A
12122-7	102A
12122-8	160
12122-9	160
12123-0	160
12123-1	160
12123-2	102A
12123-3	160
12123-4	100
12123-5	100
12123-6	100
12124-0	100
12124-1	100
12124-2	126
12124-3	126
12124-4	126
12124-6	102A
12125-4	100
12125-6	160
12125-7	126
12125-8	160
12125-9	160
12126-0	160
12126-6	102A
12126-7	102A
12127-0	121
12127-1	121
12127-2	102A
12127-3	100
12127-4	102A
12127-5	100
12127-6	123A
12127-7	123A
12127-8	123A
12127-9	123A
12128-9	100
12163	104
12173	100
12174	100
12175	100
12176	100
12178	104
12180	126
12183	100
12191	100
12192	100
12193	100
12195	102A
12196	102A
12255-235	519
12280	128
12300	123A
12429(Heathkit)	118
12454	233
12536	130
12536A	130
12537	219
12538	175
12539	184
12546	154
12550	156

To Be Replaced	ECG Replacement
12593	123A
12594	159
12602	116
12634	116(3)
12685	506
12720	116
12736	116
12746	116
12768	116
12786	116
12788	116
12803	116
12808	109
12837	116
12844	116
12850	109
12871	113
12888	159
12951-1	904
13002-3	130
13002-4	130
13030-4	181
13150I	177
13159-2	175
13162	159
13213E4252	128
13217E-1513	311
13217E1513	311
13298	130
13299	211
13419-200	278
13419-210	278
13419-310	278
13419-400	278
13419-500	278
13517	912
13747A01	529
13747A02	529
13747A03	529
13782	116
14027	116
14126-1	116
14173i8	194
14207	947
14303	123A
14305	960
14573	105
14588-9	116
14692	128
14995	128
14996-1	128
14996-2	128
15009	102A
15024	121
15027	121
15027(Diode)	109
15122	177
15354-3	121
15405-1	9946
15405-2	9949
15405-4	9932
15486	128
15809-1	123
15820-1	123
15835-1	123
15840-1	123A
15841-1	123A
15927	104
15942	754
15942-1	761
16001	130
16029	196
16039	196
16065	128
16073	5643
16082	128
16083	130
16088	7490
16111	5635
16113	152
16114	175
16115	196
16162	5626
16163	196
16164	152
16165	196
16166	152
16167	197
16169	197
16170	5635
16175	197
16176	130
16181	152
16182	152
16190	108
16191	128
16194	108
16201	130
16207	152
16208	5635
16230	130
16232	124
16234	130
16235	130
16237	199
16238	5675
16239	129
16240	130
16241	152
16254	128
16259	124
16261	130
16266	130
16267	181
16277	196

To Be Replaced	ECG Replacement
16279	197
16287	130
16289	5635
16291	5635
16292	130
16299	130
16305	152
16306	197
16319	130
16320	130
16334	152
16335	152
16336	152
16338	130
16341	196
16342	197
16598	102
16599	121
16605	707
16681	116
16958	102
16959	121
17002	116
17011-1	5547
17045	159
17047-1	102
17142	102
17143	102
17144	123
17246-33	5642
17412-5	123A
17443	116
17444	123
17607-1	127
17887	121
17945	121
17973A	147A
18109	102
18310	124
18410-42	109
18410-43	5072A
18410-141	132
18410-142	107
18410-143	123A
18410-144	199
18410-145	123A
18410-146	123A
18410-147	186A
18410-148	788
18493	126
18509	123A
18529	100
18530	102
18540	160
18541	160
18555	123A
18600-52	177
18600-53	109
18600-54	5072A
18600-151	107
18600-152	123A
18600-153	123A
18600-154	1100
18600-155	720
18600-156	1058
18600-i51	107
18601	102
18611	102
18731	102
18924-6	5403
19042	116
19278	124
19306A	548
19306P01	548
19420	108
19500-253	199
19645	123A
19680	159
19865	116
20011	159
20103	199
20294	241
20295	241
20738	123
20739	129
20810-21	116
20810-22	116
20810-91	199
20810-92	199
20810-93	128
20810-94	186
20989	124
21008-002	506
21201	128
21221	128
21280	181
21290	128
21606-1	127
21676A	128
22008	159
22009	172A
22158	123A
22164-000	519
22595-000	159
22605-005	159
22635-002	123A
22635-003	123A
22739	121MP
22741	121MP
22810-173	123A
22810-174	199
22881	226MP
22939	198
23114-046	123A
23114-050	129

To Be Replaced	ECG Replacement
23114-051	129
23114-052	154
23114-053	123A
23114-054	123A
23114-056	108
23114-057	108
23114-060	108
23114-061	102A
23114-070	130
23114-078	108
23114-082	123A
23114-095	123A
23114-097	127
23114-104	108
23115-022	118
23115-042	125
23115-057	123A
23115-058	123A
23115-072	125
23115-085	156
23125-037	108
23311-006	121
23316	123A
23606	132
23648	128
23754	152
23762	130
23769E	543
23785-1(Sylvania)	102A
23785(Sylvania)	102A
23826(Sylvania)	159
23879	5529
24198	126
24198(Rect.)	116
24451	711
24560A	124
24785	102A
25011(Honeywell)	123A
25114-101	102A
25114-102	102A
25114-103	102A
25114-104	102A
25114-116	123A
25114-121	108
25114-130	123A
25114-143	124
25114-161	123A
25115-115	116
25201-001	109
25202-002	116
25211-200	138A
25566-01	126
25566-21	128
25566-50	128
25566-62	129
25566-63	128
25566-76	128
25642-020	126
25642-030	126
25642-031	126
25642-040	126
25642-041	126
25642-110	126
25642-115	126
25642-120	126
25651-020	102A
25651-021	102A
25651-033	102A
25655-055	102A
25655-056	102A
25657-050	102A
25658-120	131
25658-121	131
25661-020	121
25661-022	104
25671-020	161
25671-021	161
25671-023	161
25672-016	154
25762-010	225
25762-012	225
25810-51	116
25810-52	177
25810-53	109
25810-54	5072A
25810-55	109
25810-107	1081A*
25810-161	123A
25810-162	123A
25810-163	123A
25810-164	1100
25810-165	720
25810-166	1087
25810-167	1081A*
25840-51	116
25840-52	116
25840-53	109
25840-54	5072A
25840-55	109
25840-161	123A
25840-162	199
25840-163	192
25840-165	1142
25840-166	1087
25840-167	1081A*
26235-1	116
26587	703A
26587-1	703A
26666-1	128
26674	542
26810-51	109
26810-52	140A
26810-151	229
26810-152	159
26810-153	199

To Be Replaced	ECG Replacement
26810-154	123A
26810-155	289
26810-157	801
26810-158	1052
26810-159	1155
27113-100	116
27123-050	116
27123-070	116
27123-100	116
27123-120	116
27125-080	123A
27125-090	123A
27125-110	128
27125-120	102A
27125-140	123A
27125-150	102A
27125-160	123A
27125-170	102A
27125-270	123A
27125-300	123A
27125-310	103A
27125-330	102A
27125-340	102A
27125-350	102A
27125-360	100
27125-370	123A
27125-380	128
27125-460	199
27125-470	199
27125-480	102A
27125-490	103A
27125-500	123A
27125-530	123A
27125-540	102A
27125-550	102A
27126-060	131
27126-090	121
27126-100	130
27127-550	123A
27840-41	116
27840-42	109
27840-43	177
27840-161	123A
27840-162	123A
27840-163	1087
27840-164	1081A*
27906	548
27906P01	541
27910-12150	123
27910-12153	102
27913-14200	5626
28222-3(Sylvania)	182
28287	109
28396	223
28474	130
28810-61	116
28810-63	177
28810-64	110
28810-65	5072A
28810-171	132
28810-172	107
28810-175	1082
28810-176	1142
28810-177	1052
28810-178	1081A*
28977	128
29076-005	161
29076-006	161
29076-023	159
29416	159
29810-61	116
29810-63	109
29810-64	140A
29810-171	132
29810-172	107
29810-173	123A
29810-174	123A
29810-175	192
29810-176	199
29810-177	123A
29810-178	186A
29810-179	788
29810-180	801
29810-181	1087
30054	940
30201	158
30202	158
30203	121
30204	102
30206	102
30207	102
30208	100
30208-1	102A
30208-2	102
30210	123
30211	121
30213	126
30214	126
30215	126
30215(RCA)	121
30216	102
30216(RCA)	121
30217	126
30218	102
30218(RCA)	160
30219	123
30221	126
30222	126
30223	126
30224	123
30226	123
30227	123A
30228	123A
30229	123A
30230	126

To Be Replaced	ECG Replacement
30231	100
30234	124
30235	123A
30236	175
30238	160
30240	160
30241	123A
30242	123A
30243	123A
30244	102
30245	124
30246	121
30246A	121
30247	126
30248	123
30253	123A
30254	175
30256	175
30257	124
30259	123
30263	102A
30267	102A&103A(CP)
30268	123A
30269	123A
30270	159
30271	185
30272	184
30273	160
30274	126
30276	130
30278	129
30289	123A
30290	159
30291	128&129(CP)
30292	108
30293	102A
30294	152
30295	152
30302	104
30302(RCA)	102A
31001	123A
31003	123A
31004-1	153
31005	159
31006	129
31009	123A
31015	234
31032-0	129
31450	156
33187-12	5011A
33188-2	130
33201-1	712
33201-2	712
33509-1	159
33563	123A
33989-2069	121
34001PC	4001B
34002PC	4002B
34005-1	727
34007	4007B
34011	4011B
34011PC	4011B
34012PC	4012B
34013PC	4013B
34014PC	4014B
34015PC	4015B
34016PC	4016B
34017PC	4017B
34019PC	4019B
34020PC	4020B
34021PC	4021B
34022	121
34023PC	4023B
34025PC	4025B
34027	4027B
34027PC	4027B
34028PC	4028B
34029PC	4029B
34030PC	4030B
34040PC	4040B
34042PC	4042B
34044	128
34048	126
34048-1	708
34049-1	722
34049PC	4049B
34050PC	4050B
34051PC	4051B
34052PC	4052B
34055PC	4055B
34066PC	4016B
34068PC	4068B
34069PC	4069
34070PC	4030B
34071PC	4071B
34077PC	4077B
34078PC	4078B
34081PC	4081B
34085PC	4085B
34086PC	4086B
34099PC	4099B
34101	5527
34118	160
34119	100
34174	116
34201	156
34202-1	727
34208	130
34219	100
34220	100
34221	100
34262	102A
34298	121
34315	121
34342	160

To Be Replaced	ECG Replacement
34379-1	720
34389	160
34394	116
34401-1	762
34405	5802
34423	160
34424	506
34425	121
34452-1	709
34459	127
34493P	102
34502-1	778
34503-1	722
34512PC	4512B
34518PC	4518B
34520PC	4520B
34526	121
34527PC	4527B
34539PC	4539B
34553	160
34555PC	4555B
34556PC	4556B
34588A	128
34675	160
34715	104
34871	102
34923	158
34942	160
34966	176
35001	130
35002	175
35004	108
35044	121
35045	102
35059-1	712
35070	160
35084	104
35086	102
35144	121
35168	126
35169	160
35170	160
35201	104
35210	128
35212	128
35218	176
35219	142A
35231	121
35260	104
35287	116
35287A	116
35289	116
35303	128
35306	116
35333	125
35349	121
35383	128
35405	175
35449	108
35452-2	158
35454	102
35454-1	158
35454-2	158
35454-3	158
35500	116
35590	102A
35604	5804
35628	102A
35677	102A
35678	102A
35728	121
35792	102A
35815	160
35816	102A
35817	102A
35818	126
35819	158
35820	102
35820-1	158
35820-2	158
35820-3	158
35824	102A
35885A	121
35885B	121
35888	128
35950	102
35951	121
35952	102
35953	102
35954	102
35955	102
36091R	5883
36145	128
36147	5802
36201	116
36203	121
36212	108
36212V1	108
36212V1(RF PWR)	195A
36213	188
36213A2	195A
36274	175
36303	121
36304	121
36304-4	121
36312	121
36320	175
36340	176
36359-4	121MP
36370-05490	175
36387	128
36395	121
36466	128
36477	121
36503(Aircastle)	116

@, * — See special notes on inside back cover.

To Be Replaced	ECG Replacement
36508	109
36534	102
36535	117
36537	117
36539	142A
36545	130
36549	116
36554	116
36555	116
36557	102
36558	102
36559	126
36560	126
36563	126
36564	116
36577	129
36578	108
36579	128
36580	123A
36581	108
36582	132
36591	5802
36634	124
36662	311
36673	176
36680	311
36680A	311
36682	128
36687	121
36695	176
36748	128
36800-2	121
36800-3	121
36800-4	121
36800-5	121
36800-6	121
36800-7	121
36803	311
36816	100
36846	130
36847	108
36848	311
36849	311
36850	311
36855	130
36892	130
36896	104
36910	121
36913	195A
36917	123A
36918	108
36919	108
36920	123A
36921	123A
36946	130
36953	130
36971	121
36997	311
37077	175
37126-1	116
37267	130
37269	129
37278	160
37279	103A
37280	128
37287	128
37334	161
37383	108
37384	108
37393	128
37431	311
37432	311
37433	311
37445	128
37464	128
37475	130
37476	181
37484	175
37486	159
37510-52	177
37510-53	110
37510-54	5072A
37510-161	199
37510-162	123A
37510-163	123A
37510-164	1100
37510-165	1052
37510-166	1052
37510-167	1081A*
37549	102A
37550	102A
37551	102A
37552	103A
37563	130
37584	124
37585	123
37599	175
37628	311
37649	128
37663	130
37664	129
37677	102
37680	116
37682	5547
37694	128
37694A	108
37694B	108
37702-1	714
37703-1	715
37704-1	790
37725	154
37730	124
37740	129
37741	128
37763	175

To Be Replaced	ECG Replacement
37764	129
37767	128
37793	129
37800	128
37806	128
37833	100
37833-2	909D
37840	128
37847	128
37884	123A
37888	130
37894	311
37899	128
37900	175
37913	175
37918	129
37932	278
37966	129
37967	181
37974	181
37975	128
37982	128
37986-3563	107
37986-4040	107
37986-4046	107
37987	116
37992	5529
38045	128
38049	181
38052	5802
38057	102A
38058	128
38063	311
38074	5804
38091	158
38093	126
38094	121MP
38095	159
38112	124
38120	154
38121	154
38122	195A
38137	130
38138	130
38166	130
38166	130
38174	116
38175	103
38176	102A
38177	102
38178	123
38182	128
38190	311
38199	101
38200	101
38207	108
38208	108
38209	100
38246	161
38246A	108
38265-00000	784
38265-00010	784
38265-00020	784
38265-00030	784
38267	181
38268	181
38269	158
38270	128
38271	128
38272	130
38279	311
38281	278
38283	123A
38332	5626
38334	128
38335	223
38354	128
38361	128
38378	220
38385	5806
38388	129
38397	181
38398	128
38424	128
38432	128
38443	175
38446-00000	724
38446-00010	724
38446-00020	724
38446-00030	724
38448	186
38458	129
38468	128
38473	181
38474	130
38475	128
38476	128
38478	199
38491	181
38494	130
38495	128
38496	129
38497	128
38510-53	140A
38510-54	177
38510-161	132
38510-162	229
38510-163	123A
38510-164	199
38510-165	192
38510-166	123A
38510-167	123A
38510-168	186A
38510-169	788
38510-170	801

To Be Replaced	ECG Replacement
38510-171	1087
38510-330	177
38510-331	5070A
38510-350	199
38511	108
38511A	108
38513-50360C	223
38533	126
38551	128
38563	222
38588	128
38608	5547
38609	5547
38626	130
38654	129
38659	128
38680	160
38681	160
38685	102A
38716	128
38725	128
38731(Kalof)	130
38733	152
38734	129
38735	128
38736	128
38737	129
38785	108
38786	108
38787	161
38788	123A
38789	195A
38804	223
38837	128
38840	5626
38869	128
38870	129
38885	5527
38890	5626
38897	130
38916	128
38920	108
38921	108
38927	5626
38927-00000	905
38965	181
38970	5529
38971	311
38976	5527
38986	311
38996	154
39005	5547
39034	123A
39039	5626
39042	177
39043	311
39053	160
39060-1	747
39075-1	738
39096	123A
39097	128
39114	129
39119	5527
39123	124
39127	130
39140	181
39148	130
39149	124
39196	181
39213	130
39231	128
39238	128
39248	128
39250	129
39251	130
39252	128
39255	128
39264	6408
39285	175
39299	5527
39302	152
39311	128
39329	128
39331	108
39343	223
39369	130
39377	124
39393	228
39414	130
39440	129
39443	128
39455	181
39458	184
39462	128
39465	181
39466	181
39477	124
39485	128
39486	128
39492	130
39510	157
39542	5642
39558	5695
39561	128
39581	223
39587	128
39616	181
39617	128
39618	129
39619	129
39635	181
39669	5626
39705	128
39713	128
39715	124

To Be Replaced	ECG Replacement
39729	316
39730	108
39731	108
39741	192
39750	152
39750(Orrtronics)	184
39751	181
39763	6408
39767	152
39789	108
39789(Power)	152
39803A	223
39804	5802
39805	5626
39811	5642
39819	223
39824	152
39830	5547
39835	128
39840	5626
39842	128
39853	129
39863	128
39864	128
39865	129
39868	128
39876	192
39893	121
39901-0001	105
39902	5444
39919	192
39920	128
39921	130
39922	223
39923	194
39940	128
39948	152
39952	5695
39954	130
39981	152
40004	160
40005	160
40006	160
40022	104
40024	116
40024VM	116
40034	102A
40034-1	102A
40034-2	102A
40034-3	102A
40034VM	102A
40035	102A
40035-1	102A
40035-2	102A
40035-3	102A
40036	102A
40036-1	102A
40036-2	102A
40036-3	102A
40037	103A
40037-1	103A
40037-2	103A
40037-3	103A
40037VM	103A
40038	102A
40038-1	102A
40038-2	102A
40038-3	102A
40038VM	102A
40050	104
40051	121
40051-2	121
40053	128
40080	329
40081	329
40081V1	329
40082	329
40082A2	329
40084	123A
40100	40100B
40100B	40100B
40106	40106B
40106B	40106B
40108	5870
40108R	5871
40109	5872
40109R	5873
40110	5874
40110R	5874
40111	5876
40111R	5877
40112	5878
40112R	5879
40113	5880
40113R	5881
40114R	5883
40115	5886
40115R	5887
40143	116
40151	130
40182	40182B
40182B	40182B
40208	5980
40208R	5981
40209R	5983
40210	5986
40210R	5987
40211	5988
40211R	5989
40212	5990
40212R	5991
40213	5992
40213R	5993
40214	5994
40214R	5995

To Be Replaced	ECG Replacement
40216	5547
40217	123A
40218	123A
40219	123A
40220	123A
40221	123A
40222	123A
40231	161
40232	123A
40233	161
40234	161
40235	161
40236	161
40237	161
40238	161
40240	161
40242	161
40243	161
40244	161
40245	161
40246	161
40250	175
40250V1	175/404
40251	130
40253	102A
40254	104
40256	191
40259	161
40259(Rect.)	5882
40260	161
40261	126
40262	126
40263	126
40263(RCA)	160
40264	124
40264V1	124
40265	116
40266	5801
40267	5802
40268	160
40269	100
40280	346
40280R	5995
40283	123A
40290	123
40294	108
40295	108
40296	161
40309	128
40309V1	128
40309V2	128
40310	175
40310V1	175
40311	188
40311A	188
40311B	188
40312	175
40312V1	175
40314	128
40314V1	188
40314V2	188
40315	128
40315V1	188
40315V2	188
40316	175
40317	128
40317V1	188
40317V2	188
40319	129
40319V1	188
40319V2	188
40320	128
40320V1	188
40320V2	188
40321	198
40321V1	188
40321V2	188
40323	128
40323V1	188
40323V2	188
40324	175
40325	130
40326	128
40326V2	188
40327	128
40327V2	188
40328	124
40329	102A
40346V1	191
40347	128
40347V2	225
40348V2	225
40349V2	225
40350	128
40351	108
40352	108
40354	154
40355	154
40359	102
40360	128
40360V1	188
40360V2	188
40361	128
40361V2	188
40361V3	188
40362	129
40362V1	189
40362V2	189
40363	130
40364	175
40366	128
40367	128
40369	130
40372	175
40373	175

To Be Replaced	ECG Replacement
40374	124
40379	5527
40383	116
40385V1	188
40385V2	188
40390	191
40391	128/401
40392	225
40395	102A
40396N	103A
40396P	102A
40397	123A
40398	123A
40399	123A
40400	123A
40403	100
40404	123A
40405	123A
40406	129
40407	129
40408	190
40409	128
40410	129
40411	181
40412	198
40413	108
40414	108
40421	130
40422	124
40423	124
40424	175
40425	124
40426	124
40427	124
40429	56006
40430	5512
40432	123A
40437V1	188
40437V2	188
40438V1	190
40438V2	190
40439	191
40439V1	191
40439V2	191
40440	127
40442	516
40444	181
40446	224
40456(RCA)	123A
40457	128
40458	195A
40459	154
40461	133
40461-2	128
40462	104
40464	130
40465	130
40466	130
40467A	220
40468	133
40468A	220
40469	108
40470	108
40471	130
40472	108
40473	123A
40474	123A
40475	108
40476	123
40477	123A
40478	108
40479	108
40480	108
40481	108
40482	108
40487	160
40488	126
40489	160
40490	102A
40491	124
40500	123A
40501	128
40502	5624
40503	5626
40504	5444
40505	5446
40506	5448
40507	5444
40508	5446
40509	5624
40510	5626
40511	5624
40512	5626
40513	223
40514	223
40517	123
40518	123
40519	123
40525	5650
40526	5651
40527	5652
40528	5650
40529	5651
40530	5652
40537	129
40537L	129
40537S	129
40538	129
40538L	129
40538S	129
40539	128
40539L	128
40539S	128
40542	223
40543	223

To Be Replaced	ECG Replacement
40544	225
40546	124
40547	124
40553	230
40554	230
40555	230
40559A	220
40576	56006
40577	123A
40578	128
40581	329
40582	224
40583	6408
40594	188
40595	189
40595VX	129
40600	221
40601	221
40602	221
40603	221
40604	221
40608	278
40611	128
40612	121
40613	152
40616	128
40618	152
40621	152
40622	152
40623	121MP
40624	196
40625	128/401
40626	121
40627	196
40628	128/401
40629	152
40630	152
40631	152
40632	196
40633	223
40634	129
40635	128
40636	284
40637	123A
40638	5624
40639	5626
40640	230
40641	231
40642	515
40643	515
40644	515
40648	124
40650	171
40662	5693
40663	5695
40664	175
40668	5633
40669	5635
40672	5697
40673	222
40689	5697
40690	5697
40691	5651
40692	5652
40702	5693
40703	5695
40704	5697
40707	5693
40708	5695
40710	5697
40713	5673
40714	5675
40716	5675
40719	5673
40720	5675
40721	5633
40722	5635
40737	5514
40738	5514
40739	5515
40740	5516
40741	5491
40742	5492
40743	5494
40744	5496
40749	5514
40750	5514
40751	5515
40752	5516
40763	102A
40766	5650
40777	5673
40778	5675
40781	5673
40782(I.C.)	804
40782(Triac)	5675
40785	5673
40786	5675
40789	5683
40790	5697
40793	5693
40794	5695
40796	5677
40798	5677
40801	5677
40808	125
40809	125
40816(RCA)	196
40819	454
40820	454
40821	454
40822	454
40823	222
40828	102A
40841	221

@, * — See special notes on inside back cover.

To Be Replaced	ECG Replacement
40842	5636
40850	124
40852	283
40852(VM)	102A
40853	283
40853(VM)	158
40867	5462
40868	5463
40869	5465
40880	230
40885	228
40886	228
40887	228
40888	230
40889	231
40890	515
40891	515
40892	515
40897	161
40899	231
40900	5632
40901	5633
40902	5635
40910	175
40934-1	130
40955	345
40967	362
40968	364
40970	366
40971	367
40973	350
40974	351
40977	359
41001-4	116
41008A	362
41009A	362
41010	364
41014	5633
41015	5635
41020-618	125
41020(RCA)	308
41021(RCA)	308
41023-224	125
41023-225	125
41023(RCA)	308
41051	123A
41052	129
41053	128
41173	519
41175	199
41176	123A
41177	159
41178	184
41179	185
41180	909D
41180(Bell&Howell)	909D
41342	185
41344	184
41440	159
41500	196
41501	197
41502	128
41503	129
41504	152
41505	228
41506	162
41570	102A
41616	116
41689	108
41694	108
42020	109
42020-737	140A
42021	125
42025-850	142A
42065	175
42221	116
42302	126
42304	158
42305	102A
42311	126
42321	176
42322	102A
42323	124
42324	102
42342	175
42358-00010	359
42358-00020	359
42396	133
42464	123A
42942	152
43021-017	123A
43021-198	128
43022-860	108
43036	1029
43044	123A
43045	123A
43046	121
43054	123A
43055	123A
43060	130
43062	177
43072	5079A
43074	121
43082	128
43088	128
43089	129
43090	706
43095	130
43104	284
43107	129
43114	130
43115	192
43116	129
43117	128
43118	182

To Be Replaced	ECG Replacement
43119	182
43120	182
43122	128
43127	159
43139	123A
43163	152
43165	128
43168	130
43200	7400
43201	7404
43202	7408
43205	7473
43296	132
43959	109
43992-2	101
44001	125
44002	519
44002(RCA)	116
44003	125
44004	125
44005	125
44006	125
44007	125
44208	152
44209	153
44465-3	116
44465-4	116
44465-5	116
44465-6	116
44616-1	102
44699	152
44763	188
44764	189
44765	188&189
44766	133
44933	515
44934	515
44935	515
44936	515
44936(RCA)	515
44937	116
44937(RCA)	515
44938	116
44938(RCA)	515
44967-2	102
45122	159
45184	123A
45299	905
45300(HTL)	9109
45337-A	199
45337-C	159
45354	128
45380	718
45381	722
45381(VofM)	722
45385	747
45386	750
45387	804
45390	743
45391	788
45394	740A
45395	804
45411	6408
45495-2	101
45810-51	116
45810-53	109
45810-54	140A
45810-161	312
45810-162	123A
45810-163	123A
45810-164	123A
45810-165	192
45810-166	199
45810-167	788
45810-168	801
45810-169	1087
45810-170	1155
46140-2	116
46287-4	110MP
46490-2	101
46590-2	103
46591-2	103
46592-2	103
46593-2	103
46631-2	101
46774-1	101
46775-2	101
46776-2	102
46914	5802
47126	116
47126-003	116
47126-1	116
47126-1A	116
47126-2	116
47126-3	116
47126-3A	116
47126-4	116
47126-4A	116
47126-6	116
47126-7	116
47126-8	156
47126-9	116
47126-10	156
47126-12	116
47127-3	116
47394-2	102
47645-2	103
47737-2	102
48004-07	123A
48004-08	123A
48009	312
48009(1)	312
48106	169
48287	109
48287-4	110MP

To Be Replaced	ECG Replacement
48385-2	103
48387-4	110
48931	280
48937-2	126
48939-2	126
49058-2	103
49092	128
49138-2	101
49139-2	102
49341	102A
49939-2	160
50009	804
50137-2	128
50200-1B	152
50200-8	196
50200-9	152
50200-12	128
50200-24	152
50201-4	153
50202-1	123A
50202-2	123A
50202-9	194
50202-12	128
50202-13	123A
50202-14	123A
50202-23	123A
50202-24	128
50203-8	159
50203-12	159
50210-2	9932
50210-7	9094
50210-8	9962
50212-19	177
50212-28	177
50212-30	177
50213-5	519
50280-3	175
50308-0100	152
50447-4	121
50477-4	121
50505-01	109
50745-01	116
50745-02	116
50745-03	156
50745-04	156
50745-05	156
50745-06	116
50745-07	116
50745-08	116
50957-03	108
51194	128
51194-01	128
51194-02	128
51194-03	128
51213	123A
51213-01	123A
51213-02	123A
51213-03	123A
51213-2	123A
51300	175
51428-01	123A
51429	199
51429-02	123A
51429-03	123A
51429-3	123A
51441	123A
51441-01	123A
51441-02	123A
51441-03	123A
51442	123A
51442-01	123A
51442-02	123A
51442-03	123A
51545	123A
51547	123A
51650	121
52000-030	9930
52000-032	9932
52000-033	9933
52000-036	9936
52000-037	9937
52000-044	9944
52000-046	9946
52000-048	9948
52000-049	9949
52000-052	9099
52000-055	9097
52000-057	9157
52000-058	9158
52000-061	9961
52000-062	9962
52000-063	9963
52215-00	130
52329	130
52360	130
53016R	177
53088-4	125
53092-1	109
53093-1	113
53099-1	116
53099-3	116
53200-22	123A
53200-23	123A
53200-51	123A
53200-74	199
53201-01	102A
53201-11	102A
53201-51	224
53203-72	128
53300-31	125
53300-41	116
53301-01	125
53400-01	123A
53704D	230
54806P1	5547

To Be Replaced	ECG Replacement
55001	7400
55002	7402
55003	7404
55004	7405
55005	7410
55006	7420
55007	7430
55008	7442
55009	7447
55010	7450
55011	7474
55012	7476
55017	74H183
55021	7409
55022	7412
55023	7422
55024	7416
55027	7413
55029	7454
55032	7401
55034	7440
55035	7407
55036	7406
55166	109
55170-1	229
55606	123A
55810-51	109
55810-52	109
55810-161	161
55810-163	161
55810-164	161
55810-166	175
55810-167	703A
55810-168	1045
55810-169	1000
55810-170	1120
55974-1	910
55975-1	9945
55976-1	9946
55977	9930
55978-1	9944
55979-1	9951
55980	9933
55982-1	9932
55986-1	909
55987-1	9962
56519	9946
56552	9093
56553	9930
56557	9936
56558	9945
56571	9962
57000-5452	108
57000-5503	123
57001-01	128
57009	234
57174	5642
57202	5626
57268-9	123A
58215-01	123A
58810-80	116
58810-82	177
58810-83	109
58810-85	116
58810-86	140A
58810-160	132
58810-161	107
58810-162	123A
58810-163	123A
58810-164	199
58810-165	123A
58810-166	123A
58810-167	199
58810-168	123A
58810-169	186
58810-170	1100
58810-171	1142
58810-172	1087
58840-111	116
58840-113	177
58840-114	110
58840-116	116
58840-117	140A
58840-192	107
58840-193	123A
58840-194	123A
58840-195	123A
58840-196	123A
58840-197	123A
58840-198	123A
58840-199	123A
58840-200	186
58840-201	1100
58840-202	720
58840-203	1087
59395(RCA)	109
59557-48	102A
59557-49	116
59625-1	159
59625-2	159
59625-3	159
59625-4	159
59625-5	159
59625-6	159
59625-7	159
59625-8	159
59625-9	159
59625-10	159
59625-11	159
59625-12	159
59840	177
59840-1	109
59844-1	116
59844-2	125
59844-3	117

To Be Replaced	ECG Replacement
59987-1	102A
59988-1	128
59989-1	129
59990-1	121
59991-1	142A
60024	223
60031	128
60034	5695
60041	130
60045	5642
60046	130
60047	130
60048	108
60059	5642
60076	181
60085	130
60091	128
60106	128
60108	5547
60115	181
60127	130
60130	130
60136	5626
60142	181
60154	129
60172	192
60175	152
60182	5642
60187	181
60194	128
60201	175
60202	5626
60205	130
60213	726
60213(IC)	726
60213(Transistor)	130
60215-1	109
60216	152
60219	175
60228	128
60234	181
60237	196
60243	130
60245	5626
60246	5626
60256	5483
60259	5642
60270	5651
60294	128
60304	5528
60306	5624
60308	124
60314	108
60317	5642
60319	5642
60322	5693
60323	5642
60335	128
60337	221
60339	181
60341	5652
60350	181
60353	724
60360	5635
60373	515
60380	181
60395	123A
60407	186
60408	152
60410	5633
60413	186
60415	5635
60416	196
60417	128
60423	128
60424	5675
60428	128
60451	5626
60457	188
60458	189
60465	130
60466	5633
60478	5643
60496	5675
60533	5675
60550	5643
60559	124
60572	5633
60579	5626
60582	5642
60594	5693
60597	128
60613	5626
60615	5643
60632	175
60650	5635
60659	128
60663	5626
60667	5675
60673	5642
60677	128
60678	196
60679	152
60680	128
60682	128
60684	154
60685	124
60694	5626
60697	128
60700	128
60701	129
60703	128
60710	130
60719	152
60719-1	159

To Be Replaced	ECG Replacement
60720	128
60732	5626
60733	5626
60741	5642
60761	124
60770	104
60784	124
60793	220
60806	5642
60810	181
60816	5635
60817	5635
60833	5635
60835	152
60837	130
60838	152
60879	5643
60885	181
60886	152
60908	6408
60916	5635
60944	130
60947	129
60966	152
60968	5675
60973	130
60977	196
60978	124
60987	152
60991	181
60994	128
60998	5643
61003-4	158
61007	223
61008-8	102A
61008-8-1	102A
61008-8-2	102A
61009-1	108
61009-1-1	108
61009-1-2	108
61009-2	108
61009-2-1	108
61009-4	123A
61009-4-1	123A
61009-6	108
61009-6-1	108
61009-9	129
61009-9-1	129
61009-9-2	129
61009-9-3	102A
61010-0	108
61010-0-1	108
61010-2-1	126
61010-6	121
61010-6-1	121
61010-7-1	108
61010-7-2	123A
61011-0	129
61011-0-1	129
61011-2	116
61011-3-2	123A
61012	130
61012-4-1	101
61012-5-1	160
61013-2-1	123A
61013-4-1	129
61013-9-1	108
61015-0-1	108
61019	130
61026	311
61035	196
61049	123A
61086-1	233
61088	5801
61093	5642
61096	5642
61102	152
61102-0	126
61104	5643
61122	5529
61133	108
61134	5643
61157	5642
61158	5642
61163	551
61173	181
61189	5675
61190	5642
61193	152
61209	128
61218	127
61219	128
61224	5642
61234	130
61239	187
61242	186
61244	129
61252	196
61260	5496
61273	311
61275	128
61282	311
61285	152
61286	152
61291	5642
61295	5675
61359	128
61367	130
61369/4367	130
61370/4560	128
61371/4561	129
61376	5635
61384	5695
61399	5626
61408	5529

To Be Replaced	ECG Replacement
61418	152
61436	156
61443	1003
61451	181
61452	5635
61456	181
61532	5675
61534	196
61538	128
61558	161
61562	128
61566	722
61596	5675
61612	5697
61613	5697
61636	152
61652	5697
61661	108
61663	108
61664	5642
61666	129
61667	128
61733	128
61755	161
61762	5633
61770	5642
61772	152
61774	129
61807	5802
61819	5547
61828	128
61831	5635
61832	5697
61841	128
61868	130
61872	5635
61875	152
61917	128
61932	5675
61937	129
61940	316
61957	5529
61958	152
61965	124
61981	152
61997	196
62004	130
62005-1	130
62013	124
62019	128
62032	102A
62075	5529
62119	124
62140	125
62142	175
62143	130
62144	196
62156	152
62177	121
62185	128
62191	5635
62192	128
62193	5697
62203	192
62204	129
62207	5642
62211	5635
62212	5675
62229	124
62232	5642
62238	5635
62243	128
62274	5642
62277	197
62279	197
62282	5529
62287	181
62334	5675
62342	5635
62382	130
62398	128
62404	128
62446	128
62449	108
62452	128
62457	5642
62511	196
62512	197
62540	128
62547	238
62571	152
62584	129
62612	128
62660	175
62665	124
62680	5643
62681	152
62689	124
62708	129
62746	5643
62759	197
62763	175
62792	130
62950	186
63234-1	909
63282	159
63718(Boston Gear)	116
63719(Boston Gear)	116
63722(Boston Gear)	5878
63723(Boston Gear)	5882
63729(Boston Gear)	5527
63730(Boston Gear)	5529
63900-229	128
64071-1	102
64090	230

To Be Replaced	ECG Replacement
65804-62	160
65804-63	102A
66007-4	128
66008-2	102A
66009-5	121
66010-3	121
66682-42	116
67001	128
67003	128
67055	177
67055-0	177
67055-1	177
67085-0	121MP
67085-0-1	121MP
67193-82	100
67193-85	102
67401	173AP
67544	136A
67586	123A
67590	109
67599	158
67802	108
68177	116
68177A	116
68504-62	160
68504-63	102A
68504-76	109,110
68504-77	109
68504-78	116
68617	123A
68645-03	116
68895-13	102
68994-1	941
68995-1	9109
69107-42	126
69107-43	160
69107-44	126
69107-45	102
69111	116
69213-78	116
70008-0	130
70008-3	130
70019-1	175
70019-5	175
70023-0-00	123A
70023-1-00	123A
70055	177
70064-7	116
70066-3	116
70066-4	116
70087-31	128
70158-9-00	129
70167-8-00	108
70177A01	798
70177A02	748
70177A03	738
70177A05	749
70177A07	767
70177B02	748
70205-8A	125
70231	108
70260-11	108
70260-12	108
70260-13	108
70260-14	123A
70260-15	123A
70260-16	123A
70260-18	130
70260-19	129
70260-20	123A
70260-29	129
70270-05	125
70270-23	116
70270-38	125
70372-2	177
70398-1	123A
70399-1	6400
70399-2	6400
70432-16	116
70434	121
70511	123A
70581-1	177
71006-28	116
71006-30	116
71119-1	177
71119-2	109
71193-2	102A
71226-1	123A
71226-2	123A
71226-3	123A
71226-6	123A
71226-10	123A
71226-15	123A
71266-4	123A
71411-1	141A
71411-2	142A
71411-3	5077A
71411-4	5079A
71411-5	5081A
71412-4	123A
71412-5	123A
71447-1	128
71447-2	123A
71447-3	128
71448	121
71448-1	121
71448-2	121
71448-3	121
71448-4	121
71448-5	121
71448-6	121
71448-7	121
71449	5802
71449-1	5802
71467-1	177

To Be Replaced	ECG Replacement
71488-4	121
71488-5	121
71488-6	121
71588-1	116
71588-2	116
71588-5	116
71588-6	116
71667-1	177
71686-4	133
71686-5	133
71686-6	132
71687	193
71687-1	193
71687-101	193
71748-1	133
71778	109
71779	116
71780	5009A
71783	169
71794	156
71818-1	159
71819-1	123A
71963-1	123A
72003	176
72004	176
72006	176
72013	109
72020	358
72036	115
72041	116
72053	113
72054-1	172A
72058	116
72058A	116
72059	358
72060	109
72080	109
72097	116
72101	116
72103	116
72109	116
72110	118
72111	119
72113	116
72113A	116
72114	123A
72115	123A
72116	123A
72117	102A
72119	116
72123	116
72123A	116
72128	110
72128A	109
72129	109
72129A	109
72130	116
72130-1	116
72132-1	766A
72133-1	767
72133-2	767
72135	138A
72135-C	138A
72137	506
72145	116
72145A	116(5)
72146	177
72147	177
72148	113
72150	102A
72151	123A
72151(Rectifier)	156
72152	178MP
72158	116
72161-1	506
72162-1	522
72162-2	500A
72163-1	178MP
72165-1	5097A
72165-3	5068A
72165-5	5099A
72165-6	5101A
72168-2	5081A
72168-3	137A
72171-1	116
72172-1	125
72174-1	166
72176	116
72180	523
72181	74121
72185	7476
72190	158
72191	103A
72193	131
72197	177
72204	123A
72206	123A
72207	123A
72784-21	100
72784-22	102A
72784-23	102A
72797-80	126
72797-81	160
72799-41	102A
72813-10	102A
72847-51	102A
72856-63	121
72874-52	123A
72879-39	126
72879-40	126
72923-08	160
72941-33	102A
72949-10	108
72951-95	108
72951-96	108

To Be Replaced	ECG Replacement
72963-14	123A
72979-80	108
73100-9	102A
73601-1	123A
74004-1	724
74004-2	724
74021-1	74H30
74107PC	74107
74109	74109
74109B	74109
74111	74111
74121PC	74121
74122PC	74122
74123	74123
74123PC	74123
74125	74125
74126	74126
74126A	74126
74126PC	74126
74128	74128
74128A	74128
74132	74132
74132A	74132
74132PC	74132
74141DC	74141
74141PC	74141
74145	74145
74145DC	74145
74145PC	74145
74150DC	74150
74150PC	74150
74151DC	74151
74151PC	74151
74152DC	74152
74152PC	74152
74153DC	74153
74153PC	74153
74154DC	74154
74154PC	74154
74155DC	74155
74155PC	74155
74156DC	74156
74156PC	74156
74164DC	74164
74164PC	74164
74165DC	74165
74165PC	74165
74166DC	74166
74166PC	74166
74170DC	74170
74170PC	74170
74174DC	74174
74174PC	74174
74175DC	74175
74175PC	74175
74176DC	74176
74176PC	74176
74177DC	74177
74177PC	74177
74178DC	74178
74178PC	74178
74179DC	74179
74179PC	74179
74180DC	74180
74180PC	74180
74181DC	74181
74181PC	74181
74182DC	74182
74182PC	74182
74190DC	74190
74190PC	74190
74191DC	74191
74191PC	74191
74192DC	74192
74192PC	74192
74193DC	74193
74193PC	74193
74196DC	74196
74196PC	74196
74197DC	74197
74197PC	74197
74198DC	74198
74198PC	74198
74199DC	74199
74199PC	74199
74200-8	116
74200-9	116
74651-02	123A
74662	181
75145-3	128
75230-9	116
75450APC	75450B
75450BPC	75450B
75451APC	75451B
75451BPC	75451B
75452APC	75452B
75452BPC	75452B
75453APC	75453B
75454APC	75454B
75454BPC	75454B
75491APC	75491B
75491BPC	75491B
75491PC	75491B
75492APC	75492B
75492BPC	75492B
75492PC	75492B
75561-1	159
75561-2	159
75561-3	123A
75561-16	123A
75561-18	234
75561-20	128
75561-21	234
75561-28	123A
75561-31	159

To Be Replaced	ECG Replacement
75561-32	128
75561-33	123A
75568-3	107
75596-1	234
75596-2	234
75596-3	234
75596-4	234
75597-1	311
75613-1	199
75613-2	199
75614-1	123A
75616-6	108
75617-1	159
75617-2	159
75636-1	360
75653-1	341
75654-1	316
75700-03-01	121
75700-04	123A
75700-04-01	123A
75700-05	123A
75700-05-01	123A
75700-05-02	123A
75700-05-03	123A
75700-08	123A
75700-08-02	123A
75700-09-01	123A
75700-09-21	123A
75700-13-01	129
75700-14-02	116
75700-14-05	125
75700-22-01	175
75700-24-02	125
75702-15-21	116
75702-15-24	117
75702-15-34	125
75803-1	153
75803-2	153
75803-3	153
75810-17	108
75960CH	102
76236	123A
76251	223
76600P	746
76675	109
76675A	109
76675B	109
76797-2	923
77001	230
77027-1	9093
77027-2	9093
77052-3	102A
77052-4	102A
77053-2	102A
77068-3170756	124
77190-7	116
77190-8	125
77271-3	116
77271-4	125
77271-8	160
77272-0	102A
77272-1	102A
77272-5	102A
77272-7	102A
77272-9	102A
77273-2	102A
77273-3	102A
77273-6	102A
77273-7	102A
77489	112
77561-27	159
78001	231
78331	159
78399	130
78524-39-01	125
78527-75-01	102A
78527-76-01	102A
78527-78-01	102A
78527-79-01	102A
78894	116
78896	358
78972	112
79408	139A
79855	108
79856	108
79922	175
79949	148A
79985	109
79992	152
80050	121
80053	704
80070	704
80071	704
80073	704
80074	704
80081	726
80083	704
80090	704
80094	704
80114	706
80131	241
80249-910787	163A
80287	706
80416C	121
80540	123A
80544	123A
80545	123A
80710	712
80755	781
80757	727
80807	130
80813VM	123A
80814VM	123A
80815VM	123A
80816VM	123A

To Be Replaced	ECG Replacement
80817VM	103A
80818VM	102A
80827	706
80829	789
80902-1	128
80904-1	128
81170-6	123A
81177	731
81336-1	727
81336-2	727
81404-4A	102A
81410-145	199
81500-3	102A
81501-5	102A
81502-0	100
81502-0A	100
81502-0B	100
81502-1	100
81502-1A	100
81502-1B	100
81502-2	102A
81502-2A	102A
81502-2B	102A
81502-3B	102A
81502-4	102A
81502-4A	102A
81502-4B	102A
81502-5	102A
81502-5A	100
81502-5B	100
81502-6	101
81502-6A	101
81502-6B	101
81502-6C	101
81502-6D	101
81502-7	100
81502-7A	100
81502-7B	100
81502-7C	100
81502-8	100
81502-8A	100
81502-8B	100
81502-8C	100
81502-9	102A
81502-9A	102A
81502-9B	102A
81502-9C	102A
81503-0	102A
81503-0A	102A
81503-0B	102A
81503-1	102A
81503-1A	102A
81503-1B	102A
81503-3	102A
81503-3A	102A
81503-4	102A
81503-4A	102A
81503-4B	102A
81503-4C	102A
81503-6	100
81503-6A	100
81503-6B	100
81503-6C	100
81503-7	100
81503-7A	100
81503-7B	100
81503-7C	100
81503-8	100
81503-8B	102A
81503-8C	102A
81504-1	100
81504-1A	100
81504-1B	100
81504-1C	100
81504-3	100
81504-3A	100
81504-3B	100
81504-3C	100
81505-8	102A
81505-8A	102A
81505-8B	102A
81505-8C	102A
81505-8X	102A
81506-4	126
81506-4A	126
81506-4B	126
81506-4C	126
81506-5	100
81506-5A	100
81506-5B	100
81506-5C	100
81506-6	100
81506-6A	100
81506-6B	100
81506-6C	100
81506-7	126
81506-7A	126
81506-7B	126
81506-7C	126
81506-8	126
81506-8A	126
81506-8B	126
81506-8C	126
81506-9	102A
81506-9A	102A
81506-9B	102A
81506-9C	102A
81507-0	102A
81507-0A	102A
81507-0B	102A
81507-0C	102A
81507-0D	102A
81507-4	102A
81507-5	103A
81507-6	103A

To Be Replaced	ECG Replacement
81510-3	100
81510-4	102A
81510-5	100
81511-4	102A
81511-5	100
81511-6	100
81511-7	100
81511-8	102A
81512-0	102A
81512-0A	102A
81512-0B	102A
81512-0C	102A
81512-0D	102A
81512-0E	102A
81513-3	123A
81513-6	102A
81513-7	121
81513-8	116
81513-9	102A
81514-2	116
81515-8	102A
81516-0	102A
81516-0A	102A
81516-0B	102A
81516-0C	102A
81516-0D	102A
81516-0E	102A
81516-0F	102A
81516-0G	102A
81516-0H	102A
81516-0I	102A
81516-0J	102A
82716	108
82965F	5635
83008	116
83272	159
83741C01	5465
84001	129
84001A	129
84001B	129
84011	4011B
84011U	4011B
84323	9931
84324	9962
84353-2	9927
84380-1	911
84626	9914
84626-1	9914
84626-2	9914
84626-3	9914
84626-4	9914
84628	9921
84628-1	9921
84628-2	9921
84628-3	9921
84628-4	9921
84630	9900
84630-1	9900
84630-2	9900
84630-3	9900
84631	9974
84631-1	9974
84631-2	9974
84631-3	9974
84631-4	9974
85549	123A
86001	109
86257	129
86287	123A
86313	786
86452	102
86458	124
86458-00	124
86812	123
86822	123
86832	102
86842	102
87532	128
87756	177
87757	123A
87758	159
87759	159
88060-52	177
88060-53	110
88060-54	5072A
88060-55	177
88060-141	132
88060-142	229
88060-143	123A
88060-144	199
88060-145	128
88060-146	186
88060-147	1100
88510-52	177
88510-53	110
88510-54	5072A
88510-55	177
88510-171	132
88510-172	107
88510-173	123A
88510-174	199
88510-175	123A
88510-176	186
88510-177	1100
88510-178	1142
88641	116
88686	123
88687	123A
88688	123A
88700	176/411
88796-1-1	5529
88801-3-1	175
88803	128
88803-2-1	128
88803-3-1	128

To Be Replaced	ECG Replacement
88832	121
88834	128
88862	123A
89028-2	9945
89028-3	9944
89028-4	9946
89028-4-1-4	9946
89028-6	9933
90050	121
90131	123A
90203-6	116
90209-172	123A
90209-182	123A
90209-246	234
90326-001	123A
90330-001	159
90429	123A
90431	194
90432	159
90448	194
90934-35	199
91001	116
91021	101
91271	128
91272	128
91273	128
91274	130
91371	198
91411	128
91428	9914
91605	123A
92138-01	941
92328	9923
93005	116
93006	116
93007	116
93011	116
93012	116
93018	5072A
93022	116
93022A	116
93023	116
93027	117
93028	116
93030	140A
93141DC	74141
93141PC	74141
93145DC	74145
93145PC	74145
93150DC	74150
93150PC	74150
93151DC	74151
93151PC	74151
93152DC	74152
93152PC	74152
93153DC	74153
93153PC	74153
93154DC	74154
93154PC	74154
93155DC	74155
93155PC	74155
93156DC	74156
93156PC	74156
93164DC	74164
93164PC	74164
93165DC	74165
93165PC	74165
93166DC	74166
93166PC	74166
93170DC	74170
93170PC	74170
93174DC	74174
93174PC	74174
93175DC	74175
93175PC	74175
93176DC	74176
93176PC	74176
93177DC	74177
93177PC	74177
93178DC	74178
93178PC	74178
93179DC	74179
93179PC	74179
93180DC	74180
93180PC	74180
93190DC	74190
93190PC	74190
93191DC	74191
93191PC	74191
93196DC	74196
93196PC	74196
93197DC	74197
93197PC	74197
93198DC	74198
93198PC	74198
93199DC	74199
93199PC	74199
93403	7489
93407	7481
93434	7488
94000	102A
94001	102A
94002	102A
94003	158
94004	104
94005	158
94006	102A
94007	160
94008	102A
94009	158
94010	179
94013	160
94014	102A
94015	102A
94016	102A

To Be Replaced	ECG Replacement
94017	158
94018	158
94019	158
94020	158
94021	158
94022	158
94023	103A
94024	121
94025	121
94026	121
94027	123A
94028	160
94029	103A
94030	102A
94032	121
94033	160
94034	121
94035	160
94036	160
94037	159
94037(EICO)	102A
94038	126
94038(EICO)	102A
94039	102A
94040	121
94041	128
94042	128
94043	195A
94044	108
94047	123A
94048	123A
94049	175
94050	128
94051	128
94051(EICO)	154
94052	128
94062	192
94063	129
94064	129
94065	130
94065A	130
94066	128
94067	129
94068	129
94070	128
94094	175
94094(EICO)	130
94152	7408
94325	9937
94327	9944
94330	910
94331	9933
94333	9932
94835-145-00	128
95000	109
95001	109
95002	109
95003	177
95004	109
95007	109
95008	109
95012	177
95014	109
95015	116
95015(EICO)	177
95016	117
95017	109
95018	109
95101	160
95102	160
95103	160
95107	160
95108	160
95110	160
95111	160
95112	101
95113	101
95114	101
95115	101
95116	126
95117	101
95118	126
95119	126
95120	126
95120A	100
95121	160
95122	126
95123	126
95125	108
95126	108
95127	108
95128	108
95129	108
95130	108
95131	108
95132	222
95133	133
95170-1	229
95170-2	229
95170-4	107
95171-1	289
95171-2	289
95171-3	289
95171-4	289
95172-2	102A
95173-1	102A
95201	102
95202	103
95203	102
95204	102
95208	102
95209	102
95211	101
95212	102
95213	102

To Be Replaced	ECG Replacement
95214	102
95216	123
95216RED	123
95216YEL	123
95217	102
95218	102
95219	102
95220	128
95221	289
95222-1	102
95222-2	103
95223	123A
95224-1	102A
95224-2	103A
95224-3	102A
95224-4	103A
95225	123
95226-003	193
95226-004	192
95226-1	128
95226-2	123
95226-3	288
95226-4	287
95227	159
95227-1	159
95228	133
95229	106
95231	133
95232	159
95233	128
95235	5400
95239-1	129
95240-1	159
95241-1	294
95241-2	294
95241-3	294
95242-1	108
95250	121
95250-1	121
95251	121
95252	124
95252-1	124
95252-2	124
95252-3	124
95252-4	124
95255-000	102
95257	104MP
95258-1	188
95258-2	189
95261-1	152
95261-2	153
95262-1	184
95262-2	185
95263-1	184
95263-2	185
95285-1	188
95286	743
95288	718
95291	722
95292	722
95293	804
95294	722
95296	172A
95298	704
95332-1	177
96147-001	5675
96148-001	5675
96457-1	123A
96458-1	159
96481	128
97202-222	5077A
97251-3	119
97680	106
98484-001	181
98496-001	5675
98497-001	5675
99023-3	116
99101	126
99102	126
99103	160
99104	160
99105	160
99106	160
99107	160
99108	160
99109-1	123
99109-2	123
99120	126
99121	126
99201	102A
99201-110	142A
99201-110(RCA)	113
99201-208	137A
99201-210	136A
99201-211	137A
99201-212	137A
99201-216	140A
99201-219	142A
99201-221	145A
99201-228	147A
99201-242	5097A
99201-278	147A
99201-312	5071A
99201-316	140A
99201-319	5022A
99201-325	5081A
99202	102A
99202-128	147A
99202-220	143A
99202-221	5075A
99202-222	5077A
99202-226	146A
99202-228	147A
99203	102A
99203-005	116

To Be Replaced	ECG Replacement
99203-006	116
99203-3	177
99203-5	116
99203-5(Diode)	177
99203-5(Pwr. Rect.)	116
99203-6	116
99203-6(RCA)	116
99203-7	125
99203-8	125
99203-9	116
99204	102A
99205	102A
99206-1	123A
99206-2	123A
99207-2	123A
99210-204	134A
99210-210	136A
99217	102
99218	102
99240-269	199
99240-292	219
99250	121
99252	124
99252-1	124
99252-2(Metal)	124
99252-2(Plastic)	157
99252-3	124
99252-4	152
100017	109
100092	123A
100093	123A
100292	199
100412	116
100449	358
100471	113
100520	116
100581	113
100617	116
100624	116
100678	126
100693	102A
100768	5521
100828-003	177
100844	109
101078	160
101087	160
101089	126
101119	123A
101154	177
101185	123A
101403	116
101434	108
101435	128
101436	195A
101497	159
101568	181
101678	101
101973	102A
101974	102A
102001	159
102002	123A
102005	7490
102009	177
102209	128
102249	358
102260	159
102263	159
102989	109
103318	116
103443	101
103508-2	9914
103508-3	9915
103514	519
103521	123A
103562	102A
103705	9946
103717	9962
103729	9930
103731	9932
103743	9936
103755	9945
103872	113
104009	126
104059	126
104080	103A
104081	116
104152	109
104213	116
104273	116
104325	116
104389	123A
104444	102A
104615	116
104719	128
104762	519
104825	1179
104830	9930
104833	9933
104836	9936
104844	9944
104846	9946
104862	9962
105064	120
105180	128
105325	1155
105330	358
105412(5	9931
105432	123A
105468	106
105517	109
105604	358
106379	117
106525	1167
106625	1166
106719	1110

To Be Replaced	ECG Replacement
107225	1192
107268	115
107274	102
107474	113
107540	116
107625	1234
107628	115
107729	112
109308	113
109328	113
109474	113
110043	116
110075	195A
110240-005	9948
110242-003	9962
110242-004	9962
110263	158
110351	146A
110388	116
110472-003	9944
110494	158
110495	103A
110496	116
110515	104
110610	109
110629	116
110636	116
110667	519
110669	128
110697	123A
110699	128
110873	116
110957	102A
110958	103A
110959	102A
111001	102
111011	102
111012	102
111013	102
111086	116
111117	160
111118	160
111193-001	311
111207	109
111278	128
111279	195A
111303	123A
111313	160
111516	116
111605	109
111625	746
111642	116
111776	116
111820	116
111943	108
111945	129
111954	160
111955	160
111956	160
111957	102A
111958	103A
111959	102A
112001	160
112002	160
112011	160
112017	116
112018	116
112032	160
112041	126
112071	102
112296	160
112297	102A
112329	116
112329(Amphenol)	177
112330	109
112355	108
112356	123A
112357	123A
112358	123A
112359	123A
112360	128
112361	128
112362	224
112520	123A
112521	123A
112522	123A
112523	123A
112524	109,110
112525	188
112526	109
112527	224
112528	156
112529	109
112529(Amphenol)	177
112530	139A
112531	116
112826	116
113039	116
113182	159
113321	116(3)
113348	123A
113391	119
113392	116
113397	118
113398	116
113398(Transistor)	123A
113438	123A
113524	123A
113875	130
113876	181
113938	108
113942	128
113998	506
114013	116(5)
114143-1	108

To Be Replaced	ECG Replacement
114267	222
114401	5529
114504	176
114504A03	176
114525	108
115039	116
115060-102	519
115063	121MP
115101	109
115123	138A
115167	123A
115225	123A
115227	160
115228	160
115229	160
115268	121
115269	121
115270-101	106
115275	126
115281	121
115282	121
115283	121
115284	121
115300-1	128
115304	195A
115440	108
115504	160
115517-001	159
115524	125
115527-1	175
115529	125
115559	116
115559A	116
115599	116
115720	123A
115728	123A
115783	124
115792	153
115810P2	128
115817	124
115867	507
115875	123A
115910	108
115925	108
116021(Sears)	177
116048	109
116050	110MP
116052	116
116054	116
116068	127
116072	126
116073	108
116074	123A
116075	124
116076	123A
116077	123A
116078	123A
116078(RCA)	159
116079	108
116080	108
116081	154
116082	108
116083	108
116084	100
116084(RCA)	129
116085	123A
116086	127
116087	127
116088	127
116089	127
116091	102A
116092	123A
116093	121
116118	152
116118-2	152
116119	108
116148	123
116198	108
116199	108
116200	108
116201	102A
116202	160
116203	102A
116204	103A
116205	102A
116206	102A
116207	160
116208	160
116209	160
116273	109
116279	124
116284	129
116286	102A
116314	112
116588	123A
116623	912
116628	102A
116683	160
116684	160
116685	102A
116686	102A
116687	103A
116756	126
116757	102A
116796P1	704
116875	123A
116906	123A
116988	158
116996	102A
116997	102A
116998	102A
117145	116
117145A	116
117208	102A
117209	102A

To Be Replaced	ECG Replacement
117210	102A
117616	100
117617	100
117618	160
117658	160
117659	109
117724	126
117725	160
117726	160
117727	102A
117728	102A
117730	110
117760	109
117823	108
117824	126
117866	160
117867	158
118200	123A
118244	116(4)
118279	124
118284	159
118335	519
118361	704
118527-04	177
118686	124
118713	123A
118822	108
118825	116
118873	116
119013	160
119119(Pair)	110MP
119199	109
119228-001	159
119232-001	123A
119258-001	123A
119264-001	519
119298-001	129
119414	108
119507	177
119526	126
119554	108
119555	108
119556	108
119557	108
119594	140A
119596	177
119597	177
119609	704
119635	123A
119636	123A
119650	124
119662	112
119697	177
119719	174
119721	121
119722	127
119723	127
119724	123A
119725	123A
119726	123A
119727	158
119728	128
119730	159
119822	128
119823	161
119824	161
119825	161
119919	109
119956	177
119982	123A
119983	129
120068	519
120073	123A
120074	123A
120075	102A
120085	123A
120143	102A
120144	102A
120231	116(4)
120471	125
120481	123A
120482	123A
120483	123A
120503	116
120504	142A
120544	116
120545	102A
120546	102A
120617	109
120818	173BP
120909-24.4	102A
121151	102A
121152	102A
121153	100
121154	100
121180	5802
121243	121
121244	179
121467	159
121468	116
121655	123A
121658	123A
121659	159
121660	123A
121661	128&129
121661(RCA)	123A
121662	123A
121663	123A
121664	123
121680	116
122061	101
122074	123A
122111	101
122112	101
122129	116

To Be Replaced	ECG Replacement
122166	109
122199	704
122243	102A
122244	102A
122517	108
122518	108
122519	123A
122520	109
122664	123A
122665	123A
122725	126
122788	116
122792	121
122901	102A
122902	107
122904	229
123004	116
123139	128
123160	108
123243	128
123244	126
123274	123A
123275	124
123275-14	124
123296	116
123375	124
123379	102A
123429	108
123430	108
123431	108
123511	126
123555-01	5547
123555-02	5547
123555-03	5547
123702	116(4)
123703	128
123791	102A
123792	121
123804-1	116
123805	102A
123805(Diode)	177
123806	102A
123807	123A
123808	131
123809	102A
123813	177
123852	311
123877	102A
123940	128
123941	123A
123971	159
123991	159
124024	107
124047	159
124097	126
124098	116
124263	108
124412	108
124511	130
124557	123A
124616	129
124623	107
124624	107
124625	160
124626	102A
124634	106
124753	123AP
124754	233
124755	159
124756	123A
124757	319
124759	123A
124812	116
125105	116
125126	142A
125127	116
125135	123A
125137	108
125138	108
125139	123A
125140	123A
125141	123A
125142	159
125143	123A
125144	161
125261	112
125263	108
125264	108
125329	107
125330	126
125389	123A
125389-14	123A
125390	123A
125390(RCA)	107
125392	108
125394	123A
125397	177
125458	116
125471	116
125474	123A
125475	123A
125475-14	108
125499	5074A
125519	123A
125528	177
125529	116
125549	116
125588	177
125703	121
125761	121
125787	166
125790	160
125835	116
125844	506
125848	506

To Be Replaced	ECG Replacement
125944	108
125964	116
125972	160
125993	116
125994	108
125994-14	108
125995	108
126023	108
126024	108
126025	161
126093	102A
126093-1	102A
126093-2	102A
126093-3	102A
126093-4	102A
126131	116
126138	124
126148	116
126150	123A
126156	123A
126176	116
126177	109
126184	160
126185	126
126186	160
126187	102A
126188	124
126276	102A
126320	116
126321	177
126331	123A
126334	123A
126413	166
126524	159
126525	123A
126526	123A
126527	506
126604	711
126609	711
126670	108
126697	102A
126698	108
126699	123A
126700	159
126701	123A
126702	123A
126703	128
126704	123A
126705	154
126706	123A
126707	159
126708	123A
126709	154
126710	154
126711	123A
126712	123A
126713	123A
126714	123A
126714(RCA)	222
126715	159
126716	123A
126717	123A
126718	159
126719	159
126720	128
126721	128
126722	124
126724	129
126725	128
126726	124
126772	124
126826(Diode)	506
126826(Transistor)	181
126836(Regulator)	5074A
126849	167
126851	5071A
126852	145A
126853	5103A
126854	5097A&5101A
126855	116
126856	506
126857	515
126858	515
126859	515
126860	118
126861	116
126862	145A
126863	123A
126863(Regulator)	5097A
126864	147A
126871	710
126885	125
126898	231
126899	230
126900	162
126945	102A
127017	109
127102	116
127112	102A
127114	102A
127166	785
127176	116
127177	138A
127214	132
127263	123A
127297	102A
127303	102A
127354	123A
127355	123A
127376	128
127379	125
127382	145A
127396	116
127397	158
127474	177
127529	123A
127532	109
127589	102A
127590	176
127693	108
127695	116
127712	154
127784	109
127792	108
127793	108
127794	108
127798	152
127828	179
127835	156
127835	156
127845	128
127899	123A
127905F02	5995
127962	102A
127978	184
127992	156
127993	177
128056	152
128057	153
128256	116
128474	177
128474(RCA)	113
128938	126
129028	109
129050	229
129051	128
129095	177
129144	108
129147	123A
129157	109
129158	109
129203	504
129213	116
129241	169
129286	158
129334	116
129348	125
129375	177
129389	160
129392	107
129392-14	108
129393-14	108
129394	108
129394-14	108
129474	109
129509	107
129571	108
129573	107
129574	108
129682-001	519
129699	159
129708-101	519
129802	158
129821	904
129871	710
129897	108
129899	123A
129903	134A
129904(RCA)	5073A
129938	137A
129940	143A
129946	145A
129949	123A
129979	108
129980	222
130013(Transistor)	123A
130013(Triac)	5695
130014	130
130026	536
130040	172A
130044	140A
130045	177
130046	177
130047	140A
130096	148A
130110	125
130122	712
130130	780
130132	5077A
130139	159
130172	128
130174	128
130200-00	102A
130200-02	102A
130221	909
130253	234
130278	108
130328	142A
130338-01	116
130380	142A
130389-00	116
130400-95	102A
130400-96	103A
130402-36	102A
130403-04	108
130403-13	123A
130403-17	123A
130403-18	123A
130403-47	103A
130403-52	102A
130403-62	108
130404-21	108
130404-29	129
130404-59	108
130474	188
130536	159
130537	123A
130607	116
130751	712
130761	145A
130762	145A
131005	5527
131006	5527
131075	152
131095-2	175
131139	191
131140	191
131148	506
131161	196
131214	112
131221	108
131239	196
131240	123A
131241	159
131242	159
131242-12	129
131243	123A
131243-12	123A
131245	116
131257	181
131262	106
131300	9930
131301	9932
131303	9936
131304	9944
131305	9945
131306	9946
131308	9962
131311	123A
131312	9093
131318	506
131346	230
131347	231
131454	5652
131475	515
131476	515
131501	116
131501(Diode)	177
131502	177
131543	161
131544	161
131545	161
131647	159
131648	108
131710	234
131815	156
131815(RCA)	112
131844	108
131848	108
131848(RCA)	152
131849	152
131950	116
132076TFI	519
132148	506
132149	116
132175	128
132285	159
132313	730
132314	728
132315	729
132325	230
132326	230
132327	128
132328	128
132329	123A
132416	142A
132418	506
132445	188
132446	188
132447	189
132448	197
132488	189
132492	149A
132495	184
132498	159
132499	184
132500	128
132501	506
132509	506
132547	506
132548	506
132549	506
132553	519
132558	213
132571	185
132573	152
132574	197
132616	5071A
132634	536A
132642	123A
132643	123A
132645	177
132650	6400
132697	152
132776	130
132814	116
132815	156
132815	156
132823	128
132824	147A
132830	159
132842	147A
132865	142A
132912	109
132966	503
133171	161
133177	128
133178	123A
133182	159
133218	199
133249	123A
133253	159
133265	171
133266	156
133275	128
133390	177
133390(Pwr. Rect)	116
133543	116
133550	181
133573	186
133576	128
133600	730
133615	506
133616	506
133684	130
133685	130
133690	123A
133743	123A
133823	175
133923	181
133925	181
133950	116
134074	112
134142	108
134143	123A
134144	108
134155	128
134180	109
134195-001	9930
134196-001	9932
134197-001	9945
134198-001	9946
134254-001	9950
134263	108
134264	112
134279	185
134280	184
134281	180
134282	181
134335	5022A
134340	762
134342	5642
134417	108
134419	108
134442	108
134444	145A
134450	222
134771	196
134772	171
134773	163A
134774	124
134777	505
134857	229
134989	128
134993	136A
135029	5642
135244	503
135281	116
135284	116
135286	159
135320	173BP
135324	221
135341	506
135347	106
135351	218
135352	162
135380	506
135386	515
135406	5097A
135571	177
135691	532
135716	171
135734	506
135735	196
135739	186
135744	127
135872	109
135932	173BP
135963	221
136066	154
136145	787
136146	788
136147	789
136162	177
136163	177
136165	108
136168	229
136239	108
136240	229
136281	234
136282	199
136423	129
136424	128
136430	199
136555	725
136605	125
136606	506
136634	142A
136635	116
136648	152
136688	177
136696	128
136721	147A
136766	106
137028	177
137028-001	177
137031	532
137057-001	519
137065	189
137066	188
137075	506
137093	102A
137127	108
137155	129
137161	752
137241	128
137245	780
137338	233
137338(3rd IF)	233
137339	123A
137340	298
137340(Diode)	115
137352	163A
137369	184
137383	161
137388	161
137527	152
137606	506
137607	165
137614	123A
137646	532
137647	136A
137648	128
137652	116
137655	5081A
137693	532
137718	165
137855	503
137875	123A
137875(I.C.)	941M
137876	5641
138001	199
138019	532
138019-001	199
138032(RCA)	310
138033(RCA)	308
138035-001	128
138049-001	234
138049-004	234
138107	149A
138121	189
138172	552
138173	552
138174	146A
138175	177
138191	123A
138192	152
138193	185
138194	130
138195	130
138196	177
138310	762
138311	7400
138312	7401
138313	7402
138314	7404
138315	7408
138316	7410
138317	7411
138318	7420
138319	7421
138320	74193
138376	159
138378	123A
138379	152
138380	789
138380(IC)	789
138380(Transistor)	152
138381	7432
138403	7473
138421	532
138429	5404
138681	949
138699	797
138699(RCA)	797
138736	119
138752	531
138763	128
138789-1	123A
138789-2	123A
138789-3	123A
138789-4	199
138789-5	199
138907	532
138974	137A
139001	531
139017	191
139029	519
139044	190
139065	178MP
139266	188
139267	189
139268	297
139269	194
139270	175
139295	165
139328	177
139362	123A
139455	159
139605	116
139605(AFC)	178MP
139618	172A
139634	109
139696	128
139706	177
140259	171
140290	159
140371	159
140372	159
140501	128
140503	506
140506	182
140612	181
140622	123A
140623	159
140624	194
140625	197
140626	196
140693	116(2)
140694	116(2)
140713	505
140715	505
140763	230
140764	231
140858-12	123A
140955	503
140971	177
140972	506
140973	144A
140976	165
140977	165
140979	196
140995	503
141008	297
141018	159
141019	128
141020	196
141134	984
141135	1174
141187	5077A
141227	159
141245	308
141254	533
141255	310
141256	308
141270	1175
141279	797
141280	1176
141295	198
141302	147A
141330	123A
141331	123A
141332	222
141335	128
141343	159
141344	159
141345	159
141355	128
141367	165
141370-1	165
141402	161
141421	159
141429	142A
141464	533
141489	116
141558	123A
141711	159
141736-6	123A
141738 63-1	159
141747	140A
141767	128
141783	128
141849	116
141872-6	116
142010-02	790
142251	171
142294	754
142341	985
142348	194
142349	923D
142569	506
142648	778
142670	147A
142671	171
142681	5511
142682	5401
142683	123A
142684	123A
142686	123A
142689	238
142690	190
142691	152
142711	123A
142718	1175
142719	986
142728	537
142738	5081A
142814	532
142838	159
142839	159
142903	985
143033	1175
143041(IC)	915
143041(TRANSISTOR)	287
143042	128
143062	9109
143162	112
143227	123A
143594	506
143595	109
143622-002	128
143777	5080A
143790	5463
143792	123A
143793	128
143794	123A
143795	123A
143796	297
143797	297
143798	128
143802	159
143803	159
143804	123A
143805	123A
143806	159
143807	159
143837	177
143847	5081A
143963	159
143964	190
144011	1123
144026	712
144027	1168
144029	295
144030	234
144031	290
144033	185
144034	199
144035	199
144036	229
144037	229
144038	186A
144039	289
144040	199
144041	293
144043	199
144044	199
144045	295
144046	130
144047	289
144048	229
144049	108
144050	116(2)
144051	116
144052	116
144053	110
144054	109
144055	601
144056	137A
144057	605
144129	152
144178	941M
144581	177
144582	229
144583	123A
144585	109
145113	147A
145134-526	121
145208	537
145258	128
145410	159
145513	5401
145551	159
145648	238
145776	298
146144-2	123A
146153-1	123A
146171-31	116
146286-01	124
146460-2	789
146466-1	130
146537-1	986
146641	9946
146642	9962
146643	9930
146644	9945
147112-7	129
147115	123A
147115-5	123A
147115-6	123A
147115-7	199
147115-8	199
147115-9	161
147122P7	199
147171-11	515
147187-2-14	125
147245-0-1	108
147256	9944
147350-2-1	704
147351-4-1	127
147351-5-1	121
147352-0-1	124
147353-0-1	161
147355	128
147356-9-1	108
147357-0-1	129
147357-1-1	123A
147357-2-1	108
147357-4-1	129
147357-7-1	123A
147357-9-1	108
147359-0-1	129
147363-1	123A
147477-7-1	140A
147477-8-2	125
147477-8-3	125
147477-8-7	125
147477-8-8	125
147477-8-10	125
147478-8-2	117
147513	123A
147549-1	159
147549-2	159
147555-1	123A
147617-11	506
147617-12	506
147624-1	197
147676-1	233
147704-6-4	142A
147922-2	112
148751-147	108
148991	9112
150045	128
150046A	128
150060	175
150070	181
150095	128
150117	123A
150580	941M
150580-2285	941M
150622	912
150714-1	199
150730	128
150741	123A
150742	159
150753	159
150758	159
150762	159
150763	123A
150768	123A
150771	159
150787	128
150796	128

To Be Replaced	ECG Replacement
150834	519
150865	106
151544	9932
151548	9099
152112A	137A
153107	152
153270	941
155103	923
156931	108
157004	129
157008	123A
157506	912
157564	915
157575	309K
157644	923
157681	912
157800	923D
157800-2760	923D
158066	9093
160196	106
160201	909
161001	109,110
161006	109
161015	110
161016	109
161021	177
161022	143A
161027	112
161029	116
161030	116
161031	116
161032	506
161033	506
161034	112
161037	116
161038	109
161199	137A
161705	102A
161918-28	123A
161919-29	128
162002-033	121
162002-039	109
162002-040	126
162002-041	126
162002-042	126
162002-062	121
162002-062A	121
162002-071	181
162002-081	128
162002-082	128
162002-085	199
162002-090	108
162002-095	121
162002-39	109
162002-40	126
162002-41	126
162002-71	130
162002-101	130
162201	358
164981	9935
164981	9935
164982	9936
165358	142A
165392	107
165572	109
165667	126
165668	123A
165735	128
165736	128
165737	128
165738	175
165739	116
165740	144A
165827	123A
165828	123A
165931	107
165932	107
165976	102A
165995	108
166272	108
166273	109
166400	158
166593	116
166726	116
166881	116
166882	102A
166883	102A
166906	123A
166907	1002
166908	126
166909	126
166917	128
166918	184
166919	185
166920	116
166921	138A
166922	116
166985	143A
166997	158
167034	116
167263	123A
167285	131
167413	116
167540	123A
167541	123A
167542	184
167543	116
167544	116
167562	109
167569	128
167572	110
167679	102A
167680	158
167688	123A
167690	159

To Be Replaced	ECG Replacement
167691	152
167956	123A
167957	123A
167958	175
167998	102A
167999	102A
168339	116
168405	123A
168567	107
168606	5547
168657	108
168658	108
168659	108
168660	128
168692	116
168706	177
168716	199
168906	158
168907	102A
168910	109
168953	103A
168954	102A
168983	102A
168984	158
169113	116
169114	177
169115	109
169116	116
169117	177
169175	158
169194	107
169195	108
169196	107
169197	123A
169199	136A
169216	124
169359	102A
169360	102A
169361	102A
169362	109
169363	116
169501	109
169505	107
169565	116
169574	123A
169590	116
169679	123A
169680	123A
169711	199
169765	116
169771	123A
169773	102A
170128	159
170133	116
170294	123A
170297	116
170307-1	121
170308	123A
170370	177
170373	109
170376	121
170376-1	121
170388	229
170407-1	121
170479-1	121
170666-1	121MP
170668-1	121MP
170733-1	178MP
170750	116
170753-1	161
170756-1	161
170783-3	103A
170794	229
170827-1	131&155(CP)
170850-1	121MP
170856	116
170857	177
170890-1	131&155(CP)
170891-1	181
170906	161
170906-1	161
170954	1042
170956	722
170964	1030
170965	116
170967-1	123A
170967(Rectifier)	116
170967(Transistor)	199
170968-1	123A
170970-1	116
170994-1	184&185(CP)
171003	127
171003-5	152 & 153
171003(Sears)	108
171003(Toshiba)	123A
171004	127
171004(Sears)	121
171005	126
171005(Toshiba)	103A
171009	107
171009(Sears)	108
171009(TOSHIBA)	123A
171010-1	102A&103A(CP)
171015(Toshiba)	124
171016	160
171016(Sears)	102A
171017	102A
171018	102A
171019	116
171026(Sears)	102A
171026(Toshiba)	123A
171027	123A
171028	108
171029(Sears)	108
171029(Toshiba)	107

To Be Replaced	ECG Replacement
171030	161
171030(Sears)	108
171030(Toshiba)	123A
171031	161
171031(Sears)	108
171031(Toshiba)	107
171032	108
171032-1	102A&103A
171033	108
171033-1	241
171033-1(Magnavox)	241&242
171033-2	152&153
171033-4	152 & 153
171034	108
171038	128
171039(Sears)	160
171039(Toshiba)	160
171040(Sears)	123A
171040(Toshiba)	123A
171044(Sears)	128
171044(Toshiba)	123A
171045	108
171046	123A
171047(Toshiba)	162
171048	108
171049	102A
171052	108
171053-1	180
171054	108
171090-1	108
171092-1	145A
171139-1	108
171140-1	108
171141-1	108
171149-016	177
171149-024	116
171162-004	199
171162-005	123A
171162-006	123A
171162-008	123A
171162-009	123A
171162-025	176
171162-026	192
171162-027	108
171162-042	109
171162-072	158
171162-073	158
171162-074	102A
171162-075	102A
171162-076	102A
171162-080	102A
171162-081	158
171162-082	121
171162-083	131
171162-086	121
171162-089	131
171162-090	131MP
171162-095	199
171162-100	199
171162-108	176
171162-113	199
171162-118	161
171162-119	123A
171162-120	102A
171162-121	102A
171162-124	154
171162-125	154
171162-126	154
171162-128	108
171162-129	108
171162-130	108
171162-131	108
171162-132	123A
171162-143	123A
171162-161	123A
171162-162	123A
171162-163	128
171162-164	210
171162-169	160
171162-172	138A
171162-180	199
171162-186	229
171162-187	229
171162-188	123A
171162-190	123A
171162-191	123A
171162-193	129
171162-195	211
171162-196	177
171162-197	177
171162-202	123A
171162-204	199
171162-235	210
171162-247	199
171162-252	116
171162-265	152
171162-269	109
171162-270	110
171162-271	177
171162-272	139A
171162-278	229
171162-279	229
171162-280	229
171162-285	199
171162-286	123A
171162-287	300
171162-288	199
171162-291	152
171162-292	139A
171174-1	130MP
171174-2	300MP
171174-3	196
171175-1	184&185(CP)
171179-027	1045
171179-028	1120

To Be Replaced	ECG Replacement
171179-036	1003
171179-038	1007
171179-045	1087
171179-051	1006
171179-070	1135
171206-1	108
171206-2	108
171206-4	108
171206-5	108
171206-6	222
171207-1	108
171207-2	108
171217-1	131
171305	116(2)
171416	116
171418-1	186A
171522	102A
171553	199
171554	123A
171555	159
171556	298
171557	297
171558	123A
171559	123A
171560	140A
171561	116
171657	116
171676	199
171677	123A
171678	199
171817	175
171840	177
171841	177
171842	136A
171843	177
171915	108
171916	102A
171917	102A
171982	1072
171983	107
172165	177
172165	177
172201	177
172252	1003
172253	177
172272	1006
172317	289
172336	129
172463	152
172547	177
172551	116
172643	152
172721	117
172722	177
172761	161
172762	294
172763	293
172816	158
175006-181	160
175006-182	160
175006-183	160
175006-184	160
175006-185	160
175006-186	102A
175006-187	108
175007-275	123A
175007-276	123A
175007-277	128
175027-021	123A
175027-022	104
175043-023	121
175043-058	123A
175043-059	123A
175043-060	123A
175043-062	108
175043-063	108
175043-064	108
175043-065	131
175043-066	109
175043-068	109
175043-069	5072A
175043-081	131MP
175043-81	121
175043-100	108
175043-107	108
170783-1	158&103A(CP)
177105	102
180010-001	912
181003-7	108
181003-8	108
181003-9	108
181012	199
181015	159
181023	123A
181030	159
181034	159
181038	219
181073	177
181214	123A
181503-6	108
181503-7	108
181503-9	108
181504-1	108
181504-2	123A
181504-7	108
181506-7	108
181515-4	128
181515-6	128
181515-7	128
181515-9	128
181619	519
181681	177
182503	74H20
182510	7438
183013	718

To Be Replaced	ECG Replacement
183014	722
183015	107
183016	107
183017	123A
183018	107
183019	107
183030	123A
183031	123A
183032	159
183033	177
183034	192
183035	193
183044	804
183045	733
183532	941
184798	519
185022	506
185335	519
185411	177
185704	116
186342A	128
187217	159
187218	123A
188056	519
188165	130
188180	159
188226	129
188400-34	5547
188660-01	941
190404	140A
190425	121
190425A	121
190426	123A
190427	160
190428	123A
190429	159
190714	161
190715	123A
190716	109
191407	5547
191870	5547
193022	9158
193207	941
193717	177
193719	177
194086-3	176
194243	128
194474-8	121
194714	116
194717	116
194917	506
195601-6	102A
195617	109
195648-6	116
196023-1	123A
196023-2	123A
196058-4	121
196064-3	102A
196117	123A
196148-0	121
196183-5	121
196183-7	102A
196184-3	116
196259-4	116
196501-7	121
196607-9	121
196779-9	128
196779-9-1	128
196780-1	128
197464	519
198003-1	123A
198003-2	123A
198005-1	195A
198007-3	123A
198010-1	126
198013-P1	123A
198014-1	128
198020-1	128
198020-2	128
198020-3	128
198023-1	123A
198023-2	128
198023-3	123A
198023-4	123A
198023-5	123A
198024	159
198030	123A
198030-2	123A
198030-3	123A
198030-4	123A
198030-6	123A
198030-7	123A
198031-1	123A
198031-2	123A
198034-1	130
198034-2	130
198034-3	130
198034-4	130
198034-5	130
198035-1	128
198035-3	128
198036-1	159
198038-1	175
198038-3	175
198038-4	175
198039-0507	130
198039-1	175
198039-3	175
198039-6	130
198039-7	130
198039-501	175
198039-503	175
198039-506	130
198039-507	130
198042-2	123A

To Be Replaced	ECG Replacement
198042-3	123A
198045-4	128
198047-1	128
198047-2	128
198047-3	128
198047-5	128
198047-6	128
198048-1	128
198048-2	128
198049-1	175
198050	159
198051-1	123A
198051-2	123A
198051-3	123A
198051-4	123A
198063-1	153
198064-1	181
198065-1	129
198065-3	129
198067-1	123A
198072-1	128
198074-1	129
198075-1	198
198077-1	128
198078-1	129
198079-1	181
198079-2	130
198400	909
198409-1	9949
198409-5	9944
198409-6	9932
198409-11	9946
198409-12	9962
198409-13	9930
198409-14	9936
198410-1	909
198581-1	123A
198581-2	123A
198581-3	123A
198763-1	5870
198763-2	5871
198763-3	5872
198763-4	5875
198763-5	5874
198763-6	5875
198763-7	5874
198763-8	5875
198763-9	5876
198763-10	5877
198763-11	5878
198763-12	5879
198763-13	5880
198763-14	5881
198763-15	5882
198763-16	5883
198764-5	5986
198764-6	5987
198764-13	5994
198765-1	5980
198765-2	5981
198765-3	5982
198765-4	5983
198765-5	5986
198765-6	5987
198765-7	5988
198765-8	5989
198765-9	5990
198765-10	5991
198765-11	5992
198765-12	5993
198765-13	5994
198765-14	5995
198766-1	5529
198766-2	5529
198766-3	5529
198766-5	5529
198766-7	5529
198766-8	5529
198773-1	519
198775-1	519
198776-1	519
198779-1	519
198785	519
198785-1	519
198785-2	519
198794-1	101
198799-4	519
198800-1	5626
198801-1	905
198802	5547
198809-1	177
198810-1	519
198813-1	519
198816	5642
198818	5626
198936-2	5675
199596	177
199807	194
199919	167
199985	116(3)
200028-7-28	102A
200062-5-31	102A
200062-5-32	102A
200062-5-33	102A
200062-5-34	102A
200062-5-36	116
200062-6-32	116
200064-6-103	108
200064-6-104	160
200064-6-105	108
200064-6-106	160
200064-6-107	123A
200064-6-108	102A
200064-6-109	127
200064-6-110	127

To Be Replaced	ECG Replacement
200064-6-111	102A
200064-6-115	116
200064-6-119	116
200064-6-120	116
200067	159
200076	123A
200200	199
200200-700	199
200220	159
200251-5377	123A
200252	128
200259-700	218
200433	159
200648-26	109
200781-702	124
201034	124
202315	109
202315(Thomas)	177
202463	116
202609-0713	123A
202617	199
202817	199
202862-518	519
202862-947	123A
202907-047P1	123A
202909-577	159
202909-587	159
202909-827	130
202911-737	159
202913-057	128
202914-010	9930
202914-010/250-060	9945
202914-010/250-070	9935
202914-010/250-100	9936
202914-020	9946
202914-030	9962
202914-040	9932
202914-050	9944
202914-417	123A
202915-627	123A
202917-137	129
202920-150	7491
202922-237	123A
202922-280	716
202925-047	219
203364	159
203718	129
204117	199
204201-001	128
204210-002	123A
204211-001	130
204969	123A
205032	159
205048	159
205049	159
205367	159
205651	541
206180	5802
206185	5802
206190	5802
206617	177
207119	124
207417	312
209185-962	121
209417-0714	108
210074	123A
210076	159
211040-1	181
211083	519
212117	199
212717	229
213217	199
214105	116
214396	121
215071	131MP
215072	123A
215074	123
215075	128
215081	123A
215089	131
215669	116
216001	109
216003	110
216014	116
216017	186A
216020	116
216024	5072A
216445-2	123A
216449	116
216817	116
216986	121
217119	105
217230	105
217892	121
218012DS	104
218017	109
218502	102A
218503	102A
218511	128
218537	129
218612	116
219016	101
219245	117
219301	121
219361	121
219440	121
219935	116
219940	121
221128	116
221158	128
221600	123A
221601	101
221602	121
221605	121
221856	126

To Be Replaced	ECG Replacement
221857	123A
221897	123A
221918	123A
221924	101
221940	121
221941	121
222131	123A
222509	102A
222611	116
222867	125
222915	121
223124	102A
223215	116
223216	116
223323	116
223357	125
223358	116
223365	121
223366	102A
223367	101
223368	101
223369	160
223370	101
223371	102A
223372	100
223462	116
223467	116
223473	100
223474	160
223475	100
223482	103A
223483	102A
223484	102A
223485	102A
223486	102A
223487	126
223489	117
223490	121
223576	121
223684	101
223720	117
223724	116
223753	116
223810	102A
223817	199
224017	199
224159	116
224503	121
224506	123A
224584	100
224586	160
224587	160
224597	116
224696	102A
224774	116
224780	142A
224817	123A
224820	103A
224857	102A
224873	121
225200	116
225265	5994
225267	117
225300	103A
225311	160
225316	136A
225410	109
225592	116
225593	102A
225594	160
225594A	126
225595	121
225596	121
225600	160
225925	121
225927	121
226058	116
226181	100
226182	116
226237	116
226334	109
226338	100
226344	109
226441	101
226517	133
226546	116
226634	121
226788	116
226789	105
226791	103A
226922	125
226924	102A
226999	121
227000	108
227015	117
227348	116
227517	123AP
227565	116
227566	121
227675	5882
227676	5994
227720	116
227724	5882
227752	100
227801	5882
227804	121
227917	102A
228007	140A
228017	102A
228229	121
228230	121
228287	102A
228417	229
228558	121
228559	121

To Be Replaced	ECG Replacement
228560	125
229017	123A
229042	5882
229045	105
229088	5994
229117	229
229133	160
229392	108
229522	116
229805	156
230084	175
230199-1	HiDiv-1
230199-2	HiDiv-1
230199-4	HiDiv-1
230208	121
230209	101
230214	128
230218	116
230233	128
230253	102A
230256	101
230259	102A
230523	121
230524	102A
230525	102A
230756	5994
230768	5529
230773	5882
231014	297
231017	297
231140-01	108
231140-04	127
231140-07	108
231140-09	127
231140-11	121
231140-15	123A
231140-21	102A
231140-23	108
231140-26	127
231140-28	154
231140-31	108
231140-33	121
231140-34	108
231140-36	161
231140-37	161
231140-43	161
231140-44	108
231140-45	103A
231339	116
231374	123A
231375	128
231378	130
231417	199
231517	294
231588	102A
231591	291
231665	116
231669	116
231672	121
231706	102A
231797	121
231923	116
232017	123A
232194	121
232203	116
232268	175
232359	130
232359A	130
232519	5882
232520	5994
232631	159
232674	121
232675	121
232676	160
232678	123A
232680	160
232681	126
232840	108
232841	128
232949	101
233011	116
233062	506
233117	229
233148	5022A
233150	145A
233305	105
233307	105
233507	100
233508	105
233509	121
233561	116
233597	116
233735	128
233817	199
233944	128
233945	100
233969	129
234015	160
234024	128
234076	102A
234077	121
234078	105
234178	121
234552	116
234553	125
234565	116
234566	121
234611	116
234612	123A
234630	102A
234631	160
234758	123A
234761	116
234763	123A
235157	5882

To Be Replaced	ECG Replacement
235192	123A
235194	102A
235200	160
235205	123A
235206	123A
235299	5994
235312	121
235313	116
235382	125
235541	156
235543	116
235546	116
235997	162
236039	161
236251	108
236265	101
236266	139A
236282	154
236285	123A
236286	123A
236287	128
236288	127
236433	129
236706	108
236709	102A
236854	181
236907	108
236935	121
237020	108
237021	108
237024	108
237025	123A
237026	108
237028	195A
237070	156
237075	191
237223	123A
237227	116
237421	156
237450	124
237452	121
237453	116
237509	5994
237785	108
237840	108
237929	116
238208-002	175
238368	123A
238417	102A
238418	102A
239097	156
239103	225
239219	138A
239221	116
239429	125
239517	196
239612	128
239713	181
239917	235
239970	123A
240003	102A
240006	102A
240055	156
240076	156
240077	5994
240388	124
240401	123A
240402	129
240403	127
240404	162
240456	116
240564	177
240594	116
240603	116
241052	129
241249	108
241295	125
241302	125
241420	5994
241517	159
241657	130
241778	108
241960	108
242029	116
242102	152
242141	125
242183	121
242221	102A
242226	116
242422	129
242460	129
242590	108
242758	123A
242759	123A
242838	121
242958	129
242960	108
243028	724
243115	156
243168	127
243215	105
243318	108
243364	116
243645	108
243815	105
243837	103A
243843	5642
243939	102A
244007	100
244357	124
244817	123A
245078-3	108
245117	5072A
245192	177
245217	139A

To Be Replaced	ECG Replacement
245517	109
245568-2	176
245917	306
246017	5075A
246617	158
246917	229
247774	339
248017	297
248717	295
248817	177
248917	116
249017	152
249117	123A
249217	116
249317	138A
249508-3	177
249588	126
249688	339
249689	339
249711	180
250400	103A
251517	199
252717	136A
252744	124
252817	116
253704	105
255728	102A
255821HS	193
255903	5994
256068	121
256071	121
256122	5994
256126	100
256127	101
256217	123A
256317	290
256417	229
256480	105
256517	123A
256617	229
256717	612
256728	5994
256729	5882
256730	5994
256817	135A
256817(Transistor)	123A
256817(Zener)	135A
256917	123A
257017	199
257107	199
257242	105
257243	105
257317	5075A
257340	102A
257341	121
257385	101
257403	121
257470	100
257473	102A
257534	105
257536	121
257540	108
258017	222
258882	116
258884	5994
258990	121
258993	101
259315	116
259368	116
259878	116
260429	116
260468	101
260565	108
260717	152
261317	295
261401	105
261417	290
261463	116
261488	105
261517	199
261586	160
261596	116
261617	199
261717	199
261898	116
261970	121
261975	116
262066	123A
262111	140A
262112	116
262113	102A
262114	121
262116	175
262309	105
262310	5994
262370	121
262417	128
262417-1	128
262546	140A
262638	129
262648	5882
262872	116
263424	140A
263561	124
263807	5882
263856	121
263857	124
264317	229
264517	153
264617	289
264717	295
264817	235
264917	108
265017	108
265074	108

To Be Replaced	ECG Replacement
265115	5994
265117	116
265164	116
265217	600
265235	116
265236	117
265240	123A
265241	108
265317	140A
265634	116
265771	160
266583	117
266685	123A
266686	102A
266702	100
267272	146A
267611	177
267704	128
267791	130
267797	108
267838	159
267878	181
267898	123A
267899	123A
268003	199
268044L	123A
268717	129
269367	103A
269374	102A
269922-001	177
270642	125
270744	121
270745	121
270746	121
270779	5882
270780	121
270781	101
270785	121
270786	5529
270819	123A
275131	123A
275612	121
275831	125
275845	127
276097	116
276160	128
276331	123A
276413	128
276415	128
279317	103A
279417	229
279517	152
279617	295
279717	235
279817	253
279917	123A
280017	519
280117	601
280217	116
280317	139A
280417	612
281001-53	199
281001-83	199
281101-97	177
281917	138A
282217	223
282317	123A
282601	116(3)
290458LGD	123A
291509	181
293118	74165
297074C11	129
297240-1	102A
299371-1	123A
299379	724
300008	102
300061-04	716
300113	123A
300233	116
300312	5994
300315	116
300486	101
300524	116
300532	5882
300536	101
300538	102A
300540	102A
300541	102A
300542	101
300550	116
300732	140A
300733	5994
300735	5882
300774	101
301586	116
301591	123A
301606	128
301915-1	941
302342	123A
302540	137A
302865	129
304281-P1	177
304581B	123A
304900	108
307566	547
308449	123A
309004	754
309412	121
309421	102A
309441	152
309442	123A
309449	130
309459	152
309481	519
309504	5642

To Be Replaced	ECG Replacement
309511	540
309683	234
309684	159
309685	234
309689	196
309690	197
310017	102A
310030	160
310035	102A
310110	128
310132	160
310157	126
310158	126
310159	102A
310160	102A
310162	160
310201	102A
310204	160
310221	126
310223	100
310224	126
310225	102A
310254	7408
313309-1	123A
315930	128
315932	128
317208	142A
318835	130
319304	129
320007	109
320280	159
320529	123A
321006P1	703A
321145	128
321165	159
321166	128
321264-2	195A
321517	123A
321573	123A
322968-17	102A
322968-140	121
322968-141	127
322968-167	102A
323934	199
324144	159
325077	129
325079	123A
325099	124
325101	128
326309-10A	519
326809	909
326823	923
326830	9930
326832	9932
326833	9933
326836	9936
326844	9944
326845	9945
326846	9946
326852	9099
326853	9093
326862	9962
328785	123
329814	9945
330003	116
330018	116
330019	116
330803	123A
331378	9932
331383	128
332762	219
333060-1029	159
333241	123A
334724-1	123A
335288-4	123A
335613	129
335774	123A
336637-20	9900
336638-21	9923
337342	159
338307	519
339002	74H00
339003	74H10
339009	74H40
339300	7400
339300-2	7400
339486	7486
340085PC	40085B
340097PC	40097B
340098PC	40098B
340160PC	40160B
340161PC	40161B
340162PC	40162B
340163PC	40163B
340174PC	40174B
340175PC	40175B
340192PC	40192B
340193PC	40193B
340194PC	40194B
340195PC	40195B
340866-2	128
346015-15	108
346015-16	108
346015-17	108
346015-18	108
346015-19	108
346015-20	108
346015-21	108
346015-22	108
346015-23	128
346015-24	123A
346015-25	108
346015-30	128
346015-37	108
346016-1	102A

To Be Replaced	ECG Replacement
346016-11	102A
346016-14	123A
346016-16	128
346016-17	128
346016-18	123A
346016-19	123A
346016-25	123A
346016-26	123A
346016-27	128
346016-63	191
346607-4	160
348048-2	116
348053-3	116
348054-1	116
348054-2	116
348054-5	116
348054-6	117
348054-7	125
348054-9	116
348054-10	116
348054-11	117
348054-14	117
348054-15	125
348055-2	116
348055-3	116
348057-8	125
348057-9	125
348057-17	136A
348058-2	125
348846-1	128
350109	311
351061	1072
359810	788
361317-1	110MP
373003	102A
373059	316
373117	102A
373119	102A
373401-1	7400
373404-1	7404
373405-1	7410
373406-1	7420
373407-1	7430
373408-1	7440
373409-1	7474
373410-1	7486
373411-1	7470
373412-1	7483
373413-1	74165
373414-1	7476
373423-1	7409
373424-1	7472
373427-1	7490
373428-1	7496
373429-1	7406
373708-1	74179
373712-1	7492
373713-1	7475
373714-1	7453
373714-2	7454
373715-1	7451
373716-1	7482
373718-1	7493A
373721-1	7407
374109-1	7408
374110-1	7460
379005N	519
379101K	123A
379102	123
380049	9158
386726-1	129
388060	123A
395253-1	130
400108	128
400127	175
400909	128
400931	9935
401003-001 0	159
401113-1	9946
401113-2	9930
401113-3	9932
401113-4	9945
401113-5	9962
401182	9951
401646	912
402060-04600	712
405101-1	194
405192	106
405457	123A
405919-35AD	5882
405919-45AD	5883
405965-8A	128
405965-30A	179
405965-35A	129
410221(RCA)	308
417214	162
421025	351
425411-01	128
430412	352
433836	123A
434245	352
436119-002	159
445023-P1	130
445111	910
450826-1	128
452077	133
454549	100
454760	160
462580-1	519
463984-1	7440
464010	116
464070	116
465002-30	799
471689	612
475018	5802

To Be Replaced	ECG Replacement
476690-2	177
481335	128
485752-090	112
489751-025	123A
489751-026	123A
489751-027	108
489751-028	159
489751-029	123A
489751-030	123A
489751-031	159
489751-032	153
489751-033	152
489751-037	128
489751-038	128
489751-039	161
489751-040	123A
489751-041	123A
489751-042	159
489751-043	124
489751-044	152
489751-045	102A
489751-047	161
489751-052	107
489751-097	159
489751-107	123A
489751-108	102A
489751-109	102A
489751-113	102A
489751-114	102A
489751-115	127
489751-119	130
489751-121	161
489751-122	123A
489751-124	159
489751-125	123A
489751-127	161
489751-128	161
489751-129	128
489751-130	159
489751-131	108
489751-137	108
489751-143	108
489751-144	128
489751-145	108
489751-146	159
489751-147	108
489751-148	108
489751-162	108
489751-163	131
489751-165	108
489751-166	123A
489751-167	108
489751-168	108
489751-169	108
489751-171	108
489751-172	123A
489751-173	107
489751-174	175
489751-175	1046
489751-206	108
489751-208	132
489752-001	109
489752-003	109
489752-005	116
489752-013	116
489752-015	116
489752-016	506
489752-017	114
489752-020	112
489752-022	116
489752-025	116
489752-026	506
489752-027	116
489752-028	116
489752-029	156
489752-031	109
489752-035	116
489752-036	110
489752-038	166
489752-040	140A
489752-041	145A
489752-042	109
489752-043	116
489752-044	113
489752-045	142A
489752-049	109
489752-050	116
489752-051	116
489752-052	112
489752-054	503
489752-066	116(3)
489752-072	120
489752-073	116
489752-074	113
489752-075	116
489752-076	109
489752-077	501A
489752-078	119
489752-089	112
489752-090	112
489752-091	5074A
489752-092	116
489752-094	116
489752-095	161
489752-096	506
489752-097	116
489752-108	116
489752-109	140A
489752-125	110
489765-005	113
489850-004	109
497442	519
497616	519
497616-1	519
497616-2	519

To Be Replaced	ECG Replacement
500001	109,110
500003	125
500009G	109
500859	116
500879	128
501010	116
501152	116
501343	177
502349	130
503146-1	178MP
504720	177
504720-1	519
504833	156
505198	130
505254	9941
505256	175
505257	175
505287	128
505342	909
505434	175
505469	175
505568	181
506902	199
506911	5802
508511	941
508590	7404
508762	123A
510007	102A
510584	199
511534S	110
511806	128
514023	123A
514045	107
514067S	129
514068S	193
514072S	129
515039S	128
515041S	107
515043S	123A
515045S	123A
516009S	132
517999	909
518022S	720
524966	176
529657	177
529658	519
530015-2	109
530019-1002	519
530043-1	113
530045-1	114
530045-2	114
530045-3	114
530045-4	114
530051-2	116
530057-1	116
530063-1	109,110
530063-4	109
530063-6	116
530063-7	116
530063-8	601
530063-10	109
530063-11	116
530063-12	116
530063-13	177
530063-14	110
530065-1	109
530065-2	109
530065-3	109
530065-1002	109
530065-1002A	109
530065-1003	109,110MP
530071-1	116
530071-2	116
530071-3	116
530072-1	116
530072-2	116
530072-4	116
530072-5	116
530072-6	519
530072-7	109
530072-8	177
530072-9	116
530072-11	116
530072-14	116
530072-15	116
530072-18	177
530072-1001	110
530072-1006	519
530072-1008	177
530072-1009	177
530072-1010	177
530072-1011	177
530072-1014	156
530072-1015	177
530072-1017	116
530072-1018	519
530072-1019	116
530073-0030	5133A
530073-2	5030A
530073-3	140A
530073-5	137A
530073-6	142A
530073-8	125
530073-9	145A
530073-12	145A
530073-13	142A
530073-14	142A
530073-15	5075A
530073-16	5105A
530073-17	145A
530073-18	146A
530073-21	5079A
530073-22	5077A
530073-23	144A
530073-24	5081A

To Be Replaced	ECG Replacement
530073-26	5075A
530073-28	5079A
530073-30	5077A
530073-31	136A
530073-32	5127A
530073-1013	142A
530073-1016	5105A
530073-1017	145A
530073-1020	151A
530073-1021	5135A
530073-1023	144A
530073-1028	5079A
530073-1029	5137A
530073-1030	5133A
530073-1031	137A
530073-1034	5071A
530082-1	116
530082-2	125
530082-3	177
530082-4	156
530082-1002	125
530082-1003	116
530082-1004	116
530084-4	116
530085-2	109
530086-1	116
530087-2	120
530088-1	125
530088-2	125
530088-3	156
530088-4	116
530088-1002	166
530088-1003	116
530088-1004	116
530089-2	358
530091-1	156
530092-1	109
530092-2	109
530092-1001	178MP
530092-1002	177
530093-1	178MP
530093-2	114
530093-3	114
530094-1	116
530095-1	116
530096	118
530096-1	119
530096-2	120
530096-3	119
530097-2	120
530097-3	506
530098-1	116
530098-1001	116
530099-1	116
530099-3	116
530099-4	116
530099-5	113
530104-2	610
530105-1	109
530105-1001	110MP
530106-1	507
530106-1001	507
530109-1	116
530111-1	116
530111-1001	116
530111-1002	125
530113-1	172A
530113-2	125
530113-1001	506
530116-1	503
530116-3	177
530116-1001	177
530116-1003	116
530118-2	142A
530119-1	503
530119-5	503
530119-7	505
530119-8	504
530119-9	505
530120-1	166
530122-1	116(3)
530122-2	506
530123-1	109,110
530123-3	506
530123-4	506
530123-5	506
530123-7	506
530124-1	116
530124-2	505
530124-3	116(4)
530126-1	116
530127-1	109
530127-4	116
530127-5	113
530127-6	116
530128-1	358
530129-1	134A
530130-1	199
530132	118
530132-1	118
530135-1	125
530135-2	519
530135-3	116
530135-1003	116
530136-T	506
530144	506
530144-1	177
530144-1001	519
530144-1002	177
530144-1003	177
530144-1004	519
530145-100	140A
530145-120	142A
530145-130	5022A
530145-339	134A

To Be Replaced	ECG Replacement
530145-569	136A
530145-689	5071A
530145-1470	5088A
530145-1569	136A
530146-1	178MP
530146-2	178MP
530148-3	506
530148-4	506
530148-1003	506
530148-1004	506
530149-9	505
530150-1	177
530151-1	177
530151-1001	116
530152-1	166
530153-1	522
530157-569	136A
530157-689	5071A
530157-870	5094A
530157-950	5096A
530157-1100	140A
530162-1	116
530163-120	142A
530165-1	522
530165-2	522
530165-3	522
530165-4	522
530165-5	534
530165-6	529
530165-7	500A
530165-8	534
530165-10	534
530165-11	529
530165-12	539
530165-13	529
530165-14	535
530165-15	534
530165-16	534
530165-17	529
530165-18	535
530166-1004	137A
530166-1005	5097A
530166-1006	5136A
530166-1007	5097A
530166-1013	5097A
530170-1	177
530171-1	116
530171-3	116
530171-1001	116
530171-1002	116
530171-1003	116
530179-1	177
530179-2	177
530179-3	177
530179-1001	177
530179-1002	506
530180-1001	116
530181-1	177
530181-1 1	177
530181-1001	177
530181-1002	177
530181-1003	177
530184-1001	506
530185-1	116(4)
530972-14	506
531298-001	106
531841-002	199
531972	128
532003	175
532593	290
532775	199
533038	116
533802	123A
534001H	177
535151-1001	116
537200	102A
537790	102
540204	161
540205	154
543995	159
547684	106
551015	102A
551026	116
551051	102A
552005	125
552006	116
552007	506
552010	116
552308	123A
552503	159
558875	7400
558876	7402
558877	7410
558878	7420
558879	7430
558880	7440
558881	7473
558882	7474
558883	7490
558885	7493A
559507	7401
559509	7450
559510	7460
559557	180
559613	7453
560004	121MP
560020S	156
562654	519
564671	129
567312	123
570000-5452	123A
570000-5503	123A
570004-503	123A
570005-452	123A
570005-503	123A

To Be Replaced	ECG Replacement
570009-01-504	123A
570029	130
570030	185
570031	184
572001	185
572683	123A
573001	102A
573003	102A
573005	102A
573011	102A
573012	102A
573018	102A
573022	102A
573024	109
573029	102A
573036	102A
573037	103A
573101	108
573103	102A
573110	102A
573114	102A
573117	102A
573119	102A
573125	102A
573142	102A
573152	102A
573153	102A
573166	121
573184	102A
573199	127
573200	102A
573212	127
573303	126
573328	102A
573329	126
573330	126
573335	160
573336	160
573356	100
573366	126
573371	160
573398	160
573402	126
573405	160
573406	160
573422	102A
573428	126
573432	102A
573467	123A
573468	123A
573469	123A
573471	126
573472	108
573474	108
573479	123A
573480	123A
573481	123A
573494	108
573495	108
573501	154
573515	124
573518	126
573529	102A
573532	128
574003	102A
575001	109
575002	109
575005	109
575009	109
575019	109
575028	116
575037	112
575042	116
575047	506
575048	174
575049	506
575050	116
575051	116
575091	109
575995	120
576001	102A
576004-018	351
576004-053	352
576005	102A
576054	177
576063	109
580029	116
581005	102
581024	101
581034A	123A
581042	102
581054	123A
581055	123A
581070	130
581078	5641
581078-1	5641
586343-1	350
586360-1	351
587012	726
595819-1	704
595819-2	726
599995	358
600080-413-001	123A
600080-413-002	123A
600096-413	123
600098-413-001	123A
600115-413-001	130
601030	109
601032	160
601040	160
601052	160
601054	126
601054(Sharp)	105
601065	103A
601113	108

To Be Replaced	ECG Replacement
601122	123A
602032	121
602040	158
602051	158
602075	160
602081	139A
602113	108
602113(Sharp)	123A
602122	128
602909-2A	123A
602909-3A	129
602909-7A	128
603020	160
603030	160
603031	121
603040	160
603112	160
603113	108
603114	116
603122	123A
603312	160
604030	160
604040	160
604080	160
604112	126
604113	108
604122	123A
604407	177
605030	102A
605112	160
605113	128
605122	131
605131	118
606020	158
606112	102A
606113	116
607101	113
607113	119
607122	124
608030	116
608101	116
608112	127
608112(Sharp)	179
608113	116
608122	128
609020	160
609030	116
609112	123A
609113	116
610020	116
610030	109,110
610035	102A
610035-1	102A
610035-2	102A
610036	102A
610036-1	102A
610036-2	102A
610036-3	102A
610036-4	102A
610036-5	102A
610036-6	102A
610036-7	102A
610036-8	102A
610039	121
610039-1	121
610040	102A
610040-1	102A
610040-2	102A
610041	108
610041-1	108
610041-2	161
610041-3	108
610042	161
610042-1	108
610043	102A
610043-1	102A
610043-2	102A
610043-3	102A
610043-4	102A
610043-6	102A
610043-7	102A
610045	108
610045-1	108
610045-2	108
610045-3	123A
610045-4	123A
610045-5	123A
610046-7	108
610049-1	121
610050	160
610050-1	160
610050-2	160
610050-3	160
610051	160
610051-1	160
610051-2	160
610051-4	160
610052	126
610052-1	102A
610053	160
610053-1	160
610053-2	160
610055	160
610055-1	160
610055-2	160
610055-3	160
610056	126
610056-1	160
610056-2	160
610056-3	160
610056-4	160
610059-2	102A
610061-1	160
610063-1	163A
610064-1	162

To Be Replaced	ECG Replacement
610067	121
610067-1	121
610067-2	121
610067-3	121MP
610067-D	121
610068	121
610068-1	121MP
610069	108
610069-1	108
610070	123A
610070-1	123A
610070-2	123A
610070-3	123A
610070-4	123A
610071	124
610071-1	124
610071-2	124
610072	108
610072-1	108
610072-2	108
610073	108
610073-1	161
610074	126
610074-1	159
610074-2	100
610075-1	154
610076	123A
610076-1	123A
610076-2	123A
610077	123A
610077-1	123A
610077-2	123A
610077-3	123A
610077-4	123A
610077-5	123A
610077-6	123A
610078	123A
610078-1	123A
610078-2	123A
610079	102A
610079-1	102A
610079-2	199
610080	102A
610080-1	102A
610082-2	159
610083	159
610083-1	234
610083-2	234
610083-3	159
610083-4	234
610088	102A
610088-1	102A
610088-2	102A
610091	108
610091-1	108
610091-2	108
610092	108
610092-1	108
610092-2	108
610093-1	159
610094	123A
610094-1	123A
610094-2	123A
610096	108
610096-1	108
610099	129
610099-1	129
610099-2	129
610099-3	102A
610099-5	129
610099-6	159
610100	108
610100-1	161
610100-2	107
610100-3	108
610102-1	106
610106	121
610106-1	121
610107-1	108
610107-2	128
610110	129
610110-1	159
610110-2	159
610111	113
610111-2	130
610111-4	130
610111-5	104
610111-6	152
610111-7	104
610111-8	196
610112	116
610112-1	153
610113-1	172A
610113-2	172A
610120-1	159
610121-1	6402
610121-2	6402
610121-3	6402
610122	140A
610122-2	283
610123-1	164
610124-1	101
610125-1	159
610126-1	102A
610126-2	103A
610128-1	199
610128-2	199
610128-4	108
610128-5	199
610128-6	199
610129-1	129
610131-2	191
610132	123A
610132-1	123A
610134-1	234

To Be Replaced	ECG Replacement
610134-2	234
610134-4	234
610134-5	234
610134-6	234
610135-1	154
610136-1	106
610139-1	229
610139-2	107
610140-1	130
610142-1	289
610142-2	123A
610142-3	123A
610142-4	123A
610142-5	123A
610142-6	108
610142-7	123A
610143-3	123A
610144-1	171
610144-2	171
610144-3	154
610144-6	154
610144-101	171/403
610145-1	233
610146-3	123A
610146-5	123A
610147-1	123A
610147-2	159
610148-1	128
610148-2	123A
610148-2A	123A
610148-3	128
610148-4	128
610149-1	153
610149-2	152
610149-3	153
610150	108
610150-1	161
610150-2	123A
610150-3	161
610151-1	199
610151-2	123A
610151-3	199
610151-4	123A
610151-5	199
610152-1	104
610153-1	152
610153-2	152
610153-3	152
610153-4	152
610153-5	152
610153-6	152
610155-1	196
610157-3	188
610157-4	189
610158-1	129
610158-2	159
610158-3	159
610161-2	130
610161-4	130
610162-2	184
610162-4	152
610162-7	153
610162-8	152
610162N2	184
610164-1	132
610165-1	123A
610165-2	123A
610166-1	222
610167-1	123A
610167-2	123A
610168-1	123A
610168-2	123A
610174-1	108
610180-1(Last IF)	233
610181-1	319
610181-2	161
610186-1	161
610189-1	238
610189-2	238
610190-1	190
610190-4	190
610194-1	165
610194-3	165
610195-1	196
610195-2	197
610195-3	152
610195-4	153
610202-1	189
610202-2	189
610203-1	222
610203-2	222
610203-3	222
610203-4	222
610203-5	222
610203-6	222
610209-1	159
610213-1	128
610213-2	128
610216-1	165
610216-2	165
610216-3	165
610217-1	163A
610217-2	163A
610217-4	163A
610223-1	159
610224-1	199
610226-1	199
610227-1	189
610228-1	188
610228-3	302
610232-1	123A
610232-2	108
610233-1	165
610241-1	165
610242-1	165

To Be Replaced	ECG Replacement
610245-1	163A
610245-2	163A
610246-1	159
610249-1	229
610358-1	222
610358-2	222
610358-3	222
610397-1	153
610397-2	152
611001-3	5650
611001-4	5651
611001-5	5642
611001-6	5642
611003-3	5404
611003-4	5404
611003-5	5404
611004-4	5463
611020	102A
611064	7405
611065	7475
611066	7486
611071	7442
611111	116
611132	113
611233	234
611428	123A
611563	7400
611564	7402
611565	7404
611566	7410
611567	7420
611568	7440
611569	7450
611570	7453
611571	7474
611572	7490
611573	7492
611730	74193
611731	74192
611844	7486
611845	7405
611870	7476
611872	74107
611878	74H55
611900	74107
611901	74180
612002-2	717
612005-1	712
612005-2	712
612006-1	722
612006-1M	722
612006-1Z	722
612006-2	722
612007-1	708
612007-2	708
612007-3	708
612008-1	725
612008-2	725
612020	179
612020-1	703A
612020-2	703A
612020-3	703A
612021-1	718
612021-2	718
612024-1	731
612025-1	730
612025-2	730
612025-3	730
612029-1	790
612029-2	790
612029-3	790
612030-1	715
612031-1	714
612042-1	1112
612042-2	1111
612044-1	738
612045-1	804
612061-1	783
612067-1	715
612069-1	715
612070-1	714
612072-1	739
612075-1	801
612076-1	742
612076-2	742
612077-1	788
612082-1	815
612082-2	815
612112	116
612130	116
612132	116
613020	116
613112	108
613130	116
613132	119
614010	116
614020	109,110
614112	112
615004-8	177
615010	109
615093-2	123A
615130	358
615154-1	519
615179-1	123A
615179-2	123A
615180-1	159
615180-2	159
615180-3	159
615180-4	159
615246-1	941M
615268-101	941M
616010	113
617871-1	121
618072	123A
618126-1	123A

To Be Replaced	ECG Replacement
618136-1	128
618139-1	121
618150-3	177
618165-1	199
618181-1	199
618197	128
618217-2	123A
618241-2	910
618483-1	941
618580	133
618639-1	519
618810-2	123A
618955-2	130
618960-1	198
618984-1	941
618986-2	218
618986-4	218
619006	123A
619006-1	128
619006-7	123A
619009-1	175
619010-1	198
619011	519
619050-1	910D
619087-1	519
619094	5626
619130	116
619256	5697
619256-1	5695
619361-1	175
619526-1	519
619550-1	766A
619692-1	723
619693-1	787
619694-1	724
620782	176
623321	987
630063	5802
633977	113
649002	130
650060	159
650175	129
650196	102A
650845	177
650854	177
650859-1	102A
650859-2	102A
650859-3	102A
650860	103A
650970	121
651012	158
651030	177
651038	116
651202	121
651236	158
651891	123A
651955	123A
651956	186
651995-1	123A
651995-2	123A
651995-3	123A
652072	123A
652085	121
652086	121
652091	123A
652092	116
652230	123A
652231	128
652321	128
652615	116
653406	128
654000	123A
654001	6400
654032	177
654420	5802
655319	121
656064	6400
656204	123A
656524	123A
656719	123A
656746	128
657161	752
657179	185
657180	184
657181	185
657874	761
658577	123A
658578	123A
658583	909D
658657	123A
659141	219
659174	130
660030	102A
660031	121MP
660059	102A
660060	102A
660064	160
660070	128
660072	102A
660074	128
660077	121
660082	102A
660084	160
660085	160
660094	121
660095	121
660097	121
660100	128
660103	121
660138	218
660144	105
660144A	105
660388-02	941M
661010	113
667784	289

To Be Replaced	ECG Replacement
670850	121MP
670850-1	121MP
681266	129
681266-1	129
696575-198	128
698941-1	159
699291	199
699410-140	128
699414-164	124
699739	116(2)
700021-00	118
700043-00	116
700047-47	123A
700047-49	123A
700055-00	113
700063-00	116
700080	130
700080A	130
700083	130
700083A	130
700180-00	109,110
700181	123A
700191	175
700195	175
700230-00	123A
700231-00	123A
700647	116
700663	116
700664	116
701584-00	159
701589-00	159
701662-00	177
701678-00	161
702407-00	128
702415-00	210
702884	123A
702885	121
702885-00	121
702886	152
703639-1	742
703639-2	742
705784-1	175
710206	910
710206-43	923
710398-28	909
710838-1	177
717101	152
717126-505	74H04
717136-1	74S00
717136-15	74S20
717399-3	923
717399-4	941
717399-22	9109
717399-49	941
717399-73	9112
720236	123A
720240	123A
720453	5800
720454	5801
720455	5802
720456	5804
720457	5806
720458	5804
720463	5806
720608-13	519
720609-1	519
721272	159
723000-18	101
723001-19	101
723020-41	128
723043-1	129
723060-29	175
723423-7	175
723423-9	175
723423-16	175
723423-20	175
726654	519
730547	704
731009	102A
740183	116
740247	131MP
740289	116
740402	109
740417	102A
740437	123A
740438	199
740439	199
740440	199
740441	123A
740442	199
740443	131MP
740461	123A
740462	123A
740463	123A
740466	123A
740470	123A
740471	131
740502	1107
740543	1107
740570	116
740583	1103
740622	720
740622(RCA)	720
740628	5071A
740629	178MP
740630	116
740781	1037
740828	177
740855	6400
740856	152
740885	176
740886	199
740887	199
740940	1005
740946	126

To Be Replaced	ECG Replacement
740947	126
740948	126
740949	107
740950	229
740951	229
740952	109
740953	507I
740954	109
741008	294
741050	160
741051	519
741098	1006
741100	177
741101	116
741114	199
741115	186
741116	136A
741473	1170
741518	1082
741519	801
741673	1160
741686	1167
741687	1155
741688	306
741689	612
741724	199
741726	123AP
741727	123A
741728	297
741729	290
741730	229
741731	123A
741732	235
741733	229
741735	123A
741736	199
741737	199
741738	135A
741739	139A
741740	116
741741	177
741805	123A
741806	199
741852	1082
741853	1056
741854	1058
741855	229
741856	297
741857	199
741858	315
741859	235
741860	222
741860(1 Gate)	133
741860(2 Gate)	222
741861	199
741862	229
741863	234
741864	177
741864(Diode)	177
741864(Transistor)	171
741865	116
741866	109
741867	140A
741868	614
741869	5072A
741870	5072A
741931	123A
742004	109
742008	116
742008(TRANSISTOR)	294
742009	116
742348	229
742349	123A
742362	1226
742363	1087
742364	1155
742365	613
742366	5073A
742510	1192
742512	199
742513	199
742537	107
742544	123AP
742545	295
742546	290
742547	229
742548	229
742549	123A
742550	199
742558	199
742564	290
742567	293
742619	164
742621	289
742623	186A
742703	199
742725	7474
742726	977
742727	992
742728	123AP
742729	293
742730	109
742732	614
742920	165
742922	5072A
742970	235
742990	290
742991	199
744002	113
744006	113
746004	116
749002	107
749014	107
750746A	358
752309	116

To Be Replaced	ECG Replacement
755722	109
757008-02	123A
760005	222
760011	7400
760012	172A
760013	7490
760015	7476
760021	219
760028	1114
760037	519
760038	123A
760040	159
760051	132
760053	229
760057	109
760066	123A
760068	199
760074	74LS92
760088	136A
760101-0005	109
760101-0006	109
760105	766A
760106	4511B
760142	123A
760202-0003	116
760204-0001	610
760236	123A
760239	123A
760249	107
760251	123A
760253	107
760268	132
760269	159
760275	186
760276	187
760284	311
760298	135A
760304	142A
760309	5116A
760333	4066B
760522-0002	722
761113	116
762200-14	9093
765713	125
765722	109
770339	760
770339(Crystal)	358
770339(I.C.)	760
770523	102A
770524	102A
770525	158
770730	102A
770768-3170756	124
771907	116
771908	166
771909	109
771910	109
771911	109
772712	109
772713	116
772714	166
772716	160
772717	160
772718	102A
772719	160
772720	102A
772721	102A
772722	102A
772723	102A
772724	102A
772725	102A
772727	102A
772728	102A
772729	102A
772732	158
772733	158
772736	102A
772737	102A
772738	107
772739	107
772740	110
772768	126
779821	197
785278-01	109
785278-101	123A
785897-01	160
793356-1	130
800019-001	128
800020-001	7420
800021-001	7430
800022-001	7440
800023-001	7410
800024-001	7400
800025-001	7453
800026-001	7450
800033-1	5529
800073-6	128
800073-7	128
800080-001	7402
800132-001	123A
800157-000	967
800158-000	972
800382-001	7475
800383-001	7483
800385-001	7442
800386-001	74193
800387-001	7404
800400-001	7474
800491-001	74121
800651-001	7406
800743-001	519
800747	102A
800806-001	7407
800946-001	128
801500	102A

To Be Replaced	ECG Replacement
801501	102A
801507	102A
801509	102A
801510	102A
801511	102A
801512	123A
801513	123A
801514	123A
801515	123A
801516	123A
801517	123A
801518	121
801519	121
801520	102A
801522	121
801523	121
801524	123A
801525	6400
801527	199
801529	123A
801530	123A
801531	6400
801532	123A
801533	172A
801534	123A
801535	172A
801536	123A
801537	130
801538	121
801540	159
801541	171
801543	123A
801545	5414
801707	116
801711	116
801712	177
801714	116
801715	116
801716	116
801722	109
801723	116
801724	519
801726	139A
801728	177
801729	123A
801730	5802
801731	142A
801800	9924
801804	754
801805	7401
801806	7404
801807	7442
801808	7490
801809	754
802008	519
802032-2	102A
802032-4	102A
802033-3	102A
802037-001	153
802054-0	102A
802056-0	102A
802189-7	102A
802189-8	102A
802263-0	102A
802263-1	102A
802389-2	102A
802415-2	102A
802425-0	127
802439-0	102A
802560	102
803182-5	123A
803369-6	123A
803372-0	123A
803373-0	123A
803696	199
803733-0	123A
803733-3	123A
803735-3	123A
810000-373	123A
810001-000	130
810002-269	9930
810002-475	5529
810002-733	129
810002-736	128
810003-000	189
810012-000	286
810017-000	5442
810020-000	129
810024	116
810032-000	309K
810034-000	912
810038-000	123A
810039-000	960
810043-000	242
810051-000	145A
810113-000	128
810117-000	288
810120-000	229
810121-000	147A
810125-000	287
810127-000	5071A
811790	9930
811791	9946
811793	9962
811794	9932
813362	727
814044A	102A
815003	102A
815015	102A
815020	100
815020A	100
815020B	100
815021	100
815021A	100
815021B	100

To Be Replaced	ECG Replacement
815022	102A
815022A	102A
815022B	102A
815023	102A
815023A	102A
815023B	102A
815024	102A
815024A	102A
815024B	102A
815025	100
815025A	100
815025B	100
815026	101
815026A	101
815026B	101
815026C	101
815026D	101
815027	100
815027A	100
815027B	100
815027C	100
815028	100
815028A	100
815028B	100
815028C	100
815029	102A
815029A	102A
815029B	102A
815029C	102A
815030	102A
815030A	102A
815030B	102A
815031	102A
815031A	102A
815031B	102A
815033	102
815034A	102A
815034B	102A
815034C	102A
815036	100
815036A	100
815036B	100
815036C	100
815037	100
815037A	100
815037B	100
815037C	100
815038	102A
815038A	102A
815038B	102A
815038C	102A
815041	100
815041A	100
815041B	100
815041C	100
815043	100
815043A	100
815043B	100
815043C	100
815055	100
815056	100
815057	100
815058	102A
815058A	102A
815058B	102A
815058C	102A
815058X	102A
815064	126
815064A	126
815064B	126
815064C	126
815065	100
815065A	100
815065B	100
815065C	100
815066	100
815066A	100
815066B	100
815066C	100
815067	160
815067A	160
815067B	160
815067C	160
815068	126
815068A	126
815068B	126
815068C	126
815069	102A
815069A	102A
815069B	102A
815069C	102A
815070	102A
815070A	102A
815070B	102A
815070C	102A
815070D	102A
815074	102A
815075	103A
815076	103A
815082	102A
815083	102A
815101	100
815103	100
815104	102A
815105	100
815107	100
815108	100
815109	100
815114	102A
815115	100
815116	100
815117	100
815118	102A
815120	102A
815120A	102A

To Be Replaced	ECG Replacement
815120B	102A
815120C	102A
815120D	102A
815120E	102A
815122	102A
815133	123A
815134	123A
815136	102A
815137	121MP
815138	116
815139	102A
815142	116
815158	102A
815160	102A
815160A	102A
815160B	102A
815160C	102A
815160D	102A
815160E	102A
815160F	102A
815160H	102A
815160-I	102A
815160-J	102A
815160-K	102A
815160-L	102A
815160-O	102A
815160-P	102A
815160-Q	102A
815164	108
815165	108
815166	124
815166-4	124
815167-3	124
815170	108
815171	123A
815171D	123A
815172	108
815172A	108
815173	199
815173A	108
815173C	108
815173F	108
815174	123A
815174L	123A
815175	124
815175H	124
815177	102A
815178	102A
815179	102A
815180-3	124
815180-4	124
815180-7	124
815181	102A
815181A	102A
815181B	102A
815181C	102A
815181D	102A
815182	123A
815183	123A
815184	123A
815184E	123A
815185	129
815185E	129
815186	123A
815186C	123A
815186L	123A
815189	102A
815190	123A
815191	123A
815193	160
815195	102A
815196	102A
815197	160
815198	123A
815199	159
815199-6	159
815201	123A
815202	123A
815203-3	121MP
815203-5	121MP
815206	161
815209	108
815210	123A
815211	159
815212	123A
815213	159
815215	711
815218-3	102A
815218-4	103A
815227	123A
815228	188&189
815228A	102A
815228A01	102
815228A1	102A
815228B	102A
815228B1	102A
815228(Emerson)	188&189
815229	159
815232	103A&158(CP)
815233	123A
815234	160
815236	159
815237	123A
815243	123A&159
815246-1	130
815246-2	121
815247	159
815259	711
815260	72*
815308A	100
816135	124
817020	507
817032	109
817036	358
817042	116

To Be Replaced	ECG Replacement
817043	116
817044	116
817053	116
817062	358
817062(Crystal)	114
817064	116
817066	116
817067	116
817068	116
817068P	116
817074	113
817077	109
817079	116
817088	116
817104	116
817109	116
817111	116
817112	116
817114	116
817117	116
817120	507
817121	116
817122	116
817123	118
817124	119
817125	109
817126	113
817127	113
817128	116
817129	358
817130	116
817133	116
817134	116
817135	116
817138	116
817140	116
817141	116
817143	116
817147	358
817148	116
817149	120
817155	142A
817156	116
817157	116
817158	109
817159	109
817160	110
817161	116
817164	116
817166	116
817167	116
817172	177
817173	135A
817175	358
817177	110
817179	156
817179A	156
817180	116
817190	177
817193	125
817194	109
817195	116
817197	139A
817199	109
817208	142A
817209	156
817962	114
824960-0	108
825065	102A
829704-6	74H21
829704-7	74H21
838105	159
844157-002	523
844212A	523
845050	123A
848082	123A
851759-3	160
851881	123
852158-7.1	116
853864-0	160
860001-8	128
860001-153	519
860003-45	911
860003-46	910
860003-99	9944
860003-101	9930
860003-111	9931
860003-121	9932
860003-141	9945
860003-151	9945
860003-161	9936
860011	177
862200-16	9093
862209-16	9962
870006	192
871125	109
880092	131
881916	7474
882028	130
883802	123A
889132	1114
889302	744
889303	1114
889779F	736
891008	159
891032	130
900201-81	128
900201-104	128
900201-105	128
900201-167	128
900545-2	519
900546-2	519
900546-20	177
900552-6	123A
900552-8	123A

To Be Replaced	ECG Replacement
900552-17	159
900552-20	123A
900552-30	123A
902521	160
908098	909
908703-1	177
908705-1	519
908705-2	519
908721-1	177
908742-1	519
908844-1	199
908864-2	159
910050-2	102A
910062-1	102A
910070-6	102A
910088	128
910094-4	102A
910634	128
910799	108
910807-11	175
910952	185
911743-1	123A
912002	754
916009	123A
916015	123A
916028	123A
916029	108
916030	123A
916031	123A
916033	199
916034	128
916046	186
916049	107
916050	123A
916051	159
916052	199
916055	199
916055(I.C.)	1010
916056	123A
916059	123A
916060	108
916061	1029
916062	159
916063	1092
916064	1045
916067	1103
916068	107
916069	108
916070	1142
916071	1003
916072	1006
916081	1010
916082	132
916083	1081A*
916084	1052
916085	1082
916091	123A
916092	1092
916098	1081A*
916100	312
916101	1127
916105	1104
916106	1170
916109	1153
916110	1155
916111	746
916112	709
916113	801
916114	184
916117	199
916118	235
916119	295
916121	1234
916122	1170
916125	1194
916126	289
916127	123A
916144	229
916150	977
916158	199
916160	123A
916161	152
916162	123A
921150-021	519
921608	116
922021	109
922092	116
922094	116
922114	128
922125	128
922183	116
922214	611
922311	116
922358	139A
922433	177
922524	139A
922567	116
922573	137A
922603	139A
922604	109
922693	142A
922799	116
922860	116
922873	177
922896	100
922943-1	519
922950	5074A
922962	109
922969	116
923103	177
923147(Diode)	177
923147(Rectifier)	156
923271	614
924605-3	116
924801-5	116

To Be Replaced	ECG Replacement
924805-5	116
924805-8	116
925075-501B	519
925252-1	519
925252-2	519
925252-4	519
925252-102	519
925253-3	519
925297	519
925297-1	519
925521-1B	177
925521-1C	177
925915-101	177
925939-101	177
925940-1B	177
925940-501B	177
928103-1	123A
928291-101	128
928291-102	128
928408-101	159
928506-101	910
928510-1	9951
928510-101	9951
928512-101	9930
928514-1	9946
928514-101	9946
928515-101	9945
928517-101	9933
928533-101	9962
928560-1	9944
928560-101	9944
928571-1	9944
928608-101	703A
930236	123A
930293	519
930347-1	7420
930347-2	7430
930347-3	7400
930347-4	7472
930347-5	7440
930347-6	7454
930347-7	7473
930347-9	7491
930347-10	7420
930347-11	7402
930347-12	7451
930347-13	7404
930347-15	7405
930419	923D
932017-0001	128
932022-0001	519
932030-1	909
932033-1	519
932040	159
932050-1	519
932055-1	128
932081-1	175
932107-1	159
932292-1C	9930
933044-2D	9932
936001	358
941295-2	123A
941295-3	123A
942677-9	177
943502	519
943720-001	123A
944148	5695
945820-4	116
951702	229
954330-2	123A
959492-2	123A
960106-3	159
960201	107
960202	107
960494-1	128
960494-2	128
961544-1	123A
964158	112
964547-2	199
964634	108
964688	103A&158(CP)
964713	108
964999	112
965000	123A
965073	112
965074	108
965632	161
965633	108
965634	108
969099-1	519
970046	108
970046-1	108
970046-2	108
970046A	108
970047	112
970107	129
970108	128
970244	108
970245	108
970246	159
970247	123A
970248	159
970249	108
970250	123A
970251	159
970252	123A
970253	132
970254	159
970255	124
970309	108
970309-1	108
970309-2	108
970309-3	108
970309-4	108
970309-5	108

To Be Replaced	ECG Replacement
970309-12	108
970310	108
970310-1	108
970310-2	108
970310-3	108
970310-4	108
970310-5	108
970310-12	108
970332	108
970332-12	108
970659	123A
970660	123A
970661	123A
970662	123A
970663	159
970759	112
970762	159
970762-6	129
970911	108
970916	123A
970916-6	123A
971059	159
971460	199
972155	123A
972156	123A
972214	123A
972215	123A
972216	116
972217	5079A
972258-6	109
972258-8	109
972258-9	109
972259-8	109
972305	161
972306	107
972307	107
972417	107
972418	107
972419	107
972420	107
972571-2	119
972571-3	119
972571-4	116
973935-20	116
973936-1	116
973936-2	116
973936-3	116
973936-4	116
973936-5	116
973936-6	116
973936-7	116
973936-8	116
973936-10	116
973936-11	116
973936-12	116
973936-13	116
973936-14	116
973936-15	116
973936-16	116
973936-17	116
973936-18	116
973936-20	125
973962-1	116
980052	105
980052A	105
980132	121
980134	121
980135	121
980136	100
980138	108
980139	108
980140	160
980142	160
980143	116
980144	102A
980146	160
980147	123A
980148	102A
980149	102A
980150	127
980153	102A
980155	121
980164	116
980316	100
980372	126
980373	126
980374	126
980375	102A
980376	102A
980426	100
980432	100
980434	100
980435	160
980437	121
980438	100
980439	100
980440	123A
980441	160
980462	105
980462A	105
980463	105
980463A	105
980505	160
980506	160
980507	160
980508	102A
980509	160
980510	102A
980511	102A
980514	109
980514A	160
980540	116
980545A	160
980626	126
980636A	160

To Be Replaced	ECG Replacement
980833	126
980834	126
980835	126
980836	102A
980837	102A
980958	126
980959	126
980960	102A
980961	102A
980964	116
981143	160
981144	160
981145	160
981146	160
981147	102A
981148	102A
981149	102A
981150	109
981153	109
981203	160
981204	160
981206	102A
981207	109
981248	118
981249	119
981371	120
981445	116
981522	109
981672	102A
981673	102A
981674	102A
981675	102A
981676	109
981739	116
981952	116
981953	116
981954	116
981955	116
981956	116
981959	160
981969	105
981969A	105
982065	109
982150	126
982151	102A
982152	102A
982214	116
982231	123A
982244	102A
982253	116
982254	139A
982267	126
982268	108
982269	108
982270	109,110
982271	109,110
982275	109
982279	722
982283	102A
982284	102A
982285	102A
982289	126
982290	109
982300	128
982321	108
982322	160
982361	113
982374	160
982375	102A
982376	124
982377	116
982497	160
982510	123A
982511	123A
982512	123A
982523	175
982526	116
982528	124
982531	102A
982532	102A
982815	108
982816	108
982817	108
982818	108
982819	108
982820	102
982822	109
982823	116
983011	138A
983012	176
983036	121
983055	181
983095	108
983096	108
983097	123A
983099	109
983101	116
983233	107
983234	107
983235	107
983236	126
983237	102A
983238	102A
983239	109
983271	126
983272	126
983405	102A
983406	102A
983407	102A
983408	102A
983409	102A
983411	102A
983413	116
983742	107
983743	123A

@, * — See special notes on inside back cover.

To Be Replaced	ECG Replacement
983744	178MP
983795	121
983874	121
983945	105
983975	121
983995	118
984156	108
984158	108
984159	108
984160	102A
984161	158
984162	177
984163	109
984182	116
984183	116
984184	116
984189	116
984191	161
984192	161
984193	159
984194	108
984195	108
984196	128
984197	123A
984198	123A
984200	109
984221	102A
984222	123A
984224	123A
984226	109
984227	154
984228	102A
984229	128
984252	138A
984254	116
984259	130
984259A	130
984260	506
984261	121
984286	123A
984431	121
984521	131
984522	116
984577	108
984590	123A
984591	123A
984593	123A
984594	116
984608	124
984666	109
984685	126
984686	123A
984687	123A
984690	166
984713	116
984743	108
984744	108
984745	123A
984746	102
984794	156
984795	156
984851	108
984852	108
984853	108
984854	123A
984875	108
984876	107
984877	107
984878	107
984879	123A
984880	177
984881	110
984882	116
984932	124
985036	121
985096	108
985097	108
985098	123A
985099	123A
985100	123A
985101	123A
985102	123A
985103	131
985105	116
985106	177
985175	221
985215	108
985216	102A
985217	102
985218	116
985431	121
985432	105
985442	107
985442A	108
985443	121
985443A	108
985444	107
985444A	108
985445	126
985445A	160
985446	126
985446A	160
985447	121
985448	138A
985449	121
985453	121
985455	121
985468	102A
985468A	102A
985469	102A
985469A	102A
985470	158
985470A	102A
985471	158
985472	116

To Be Replaced	ECG Replacement
985543	123A
985609	102A
985610	102A
985611	126
985619	107
985621	109,110MP
985686	121
984688	103A&158(CP)
985715	132
985735	103A
985735A	103A
985961	5022A
986015	106
986030	129
986302	102A
986305	158
986414	116
986542	123A
986543	158
986576	107
986578	135A
986634	108
986635	108
986636	123A
986693	107
986694	107
986766	102A
986779	158
986930	222
986931	129
986932	186
986933	187
986934	177
986935	116
987010	123A
987030	128
988000	108
988001	108
988002	108
988003	123A
988005	158
988049	117
988050	140A
988051	116
988080	121
988336	121
988413	121
988414	105
988468	121
988977	105
988985	108
988986	108
988987	108
988988	108
988989	108
988990	159
988991	123A
988992	193
988993	128
988994	109
988995	177
988996	177
988997	109
988998	109
989171	105
989387	121
989615	105
989692	105
989693	105
989709	909
991064	125
991129	125
991421	125
991422	125
991429	125
992052	123A
992059	123A
992066	199
992073	229
992080	229
992087	289
992101	229
992108	229
992115	152
992129	123A
992143	109
992150	177
992157	116
992157-1	519
992164	601
992171	116
992178	140A
992234	7404
992241	7493A
992248	1100
992255	1244
992269	74145
992289	102
993111	139A
993570-4	129
993624-2	128
994634	108
995001	121
995002	102A
995003	102A
995014	121
995015	121
995016	123A
995017	123A
995030	124
995053-1	722
995081-1	790
995870-1	123A
995870-3	123A
995928 1	128

To Be Replaced	ECG Replacement
996746	123A
996817	152
998280-930	9930
998280-945	9945
998280-962	9962
999106-2	911
999106-3	911D
1000100	7492
1000100-000	7492
1000101	7493A
1000101-000	7493A
1018715	124
1018734-001	124
1022612	123A
1043176-1	116
1043176-2	116
1043176-3	116
1043176-4	116
1043176-5	116
1045013	116
1045154-1	116
1045154-2	116
1045154-3	116
1045154-5	156
1045154-6	156
1045494-1	114
1061854-2	126
1407832-6	115
1107832-7	113
1107832-8	113
1107832-9	113
1107832-10	113
1107832-11	113
1107863-1	358
1107863-2	358
1107863-3	358
1121008/7611	109
1127859	123A
1195397	178MP
1211016/7603/7608	102A
1211017/7603/7608	102A
1211018/7603/7608	102A
1221028	105
1221615	121
1221625	104
1221648	100
1221649	100
1221900	5072A
1221962	123A
1222123	123A
1222133	123A
1222136	160
1222314	160
1222371	160
1222424	123A
1222463	108
1223770	109
1223771	519
1223772	116
1223773	140A
1223781	108
1223782	123A
1223783	241
1223784	195A
1223785	195A
1223786	195A
1223909	1167
1223910	1155
1223911	123A
1223912	123A
1223913	297
1223914	290
1223915	229
1223916	123A
1223917	306
1223918	235
1223919	229
1223920	123A
1223921	199
1223922	123A
1223923	199
1223925	614
1223926	135A
1223927	139A
1223928	116
1223929	125
1223930	177
1223931	109
1224031	294
1224076	1192
1224077	123A
1224078	295
1224079	297
1224081	290
1224082	229
1224083	229
1224084	123A
1224085	123A
1224086	199
1224087	199
1261915-191	129
1261915-383	123A
1288055	128
1289050	130
1303256	156
1316147	159
1320135	123A
1320135A	123A
1320135BC	123A
1320135C	123A
1330021-0	904
1330021-1	904
1330131	519
1330133	519
1390655	506

To Be Replaced	ECG Replacement
1407205-1	121
1407206-1	121
1408615-1	108
1408640-1	108
1408649-1	109
1408694-1	222
1415721-1	506
1415721-35	506
1415742-5	797
1415762-1	230
1415762-2	231
1415780-1	5511
1415781-2	5401
1417302-1	123A
1417303	298
1417303-1	298
1417303-2	298
1417306-1	128
1417306-2	123A
1417306-3	123A
1417306-4	123A
1417306-5	123A
1417306-6	123A
1417306-7	123A
1417306-8	123A
1417308-1	199
1417308-2	199
1417312-1	123A
1417312-2	123A
1417316-1	188
1417317-1	189
1417318	194
1417318-1	123A
1417318-2	297
1417320	130
1417320-1	130
1417321-1	194
1417322-1	175
1417325-1	128
1417330-1	159
1417330-2	159
1417330-3	159
1417330-4	159
1417330-5	159
1417331-1	165
1417334-1	123A
1417335-1	165
1417338-5	128
1417338-6	128
1417338-7	128
1417339-1	159
1417340-2	123A
1417342-1	128
1417342-1(Diode)	116
1417344-1	128
1417344-2	128
1417344-3	287
1417345-2	128
1417346-1	123A
1417347-1	159
1417349-2	297
1417352-5	171
1417356-2	130
1417358-1	152
1417359-1	185
1417362-1	198
1417362-2	198
1417362-4	198
1417362-5	171
1417363-1	159
1417364-1	196
1417366-1	165
1417370-1	165
1417372-1	222
1417380-1	238
1417381-2	128
1417398-1	190
1417399-4	152
1417400-1	128
1417401-1	159
1417402-1	159
1417872-11	519
1420427-1	102A
1420427-2	102A
1420427-3	102A
1421207-1	178MP
1438917-1	1175
1440977	118
1440977-1	118
1440990	120
1442415-2	112
1442415-3	112
1443024-1	199
1443200-3	102A
1444875-1	142A
1445470-2	503
1445470-50	502
1445470-501	503
1445470-502	506
1445470-503	503
1445470-504	504
1445740-502	502
1445829-501	189
1445829-502	189
1445829-503	188
1445829-504	188
1446149-1	506
1446149-2	506
1449098-1	154
1462432-1	710
1462434-1	710
1462445-1	711
1462516	712
1462516-001	712
1462516-1	712

To Be Replaced	ECG Replacement
1462554	730
1462554-1	730
1462554-2	730
1462554-3	730
1462554-4	730
1462559-1	728
1462560	729
1462560-001	729
1462560-1	729
1462577	780
1463633-1	710
1463641-1	536
1463641-2	536
1463677-1	780
1463677-2	780
1463677-3	780
1463681-1	904
1463686-1	712
1464295-1	756
1464295-2	762
1464437-1	787
1464437-2	787
1464437-3	787
1464438-1	788
1464438-2	788
1464438-3	788
1464439-2	789
1464460-2	789
1464460-3	789
1464607-1	532
1464607-2	532
1464607-3	532
1464607-4	532
1464607-5	532
1464607-6	532
1464607-7	531
1464607-8	531
1464607-9	533
1464607-10	533
1464686-1	712
1464778-9	507
1464846-1	949
1464846-2	949
1464984-1	532
1464984-2	532
1465158-1	797
1465158-2	797
1465316-1	984
1465316-2	984
1465316-2A	984
1465345-1	1174
1465615-1	1176
1465615-2	1176
1465617-2	1175
1465617-3A	1175
1465629-1	985
1465629-2	985
1465914-50	503
1465914-501	503
1466701-1	1177
1466860-1	532
1466860-2	537
1466862-2	531
1466865-1	532
1470872-6	177
1470990	120
1470990-1	120
1471036-14	121
1471036-20	121
1471072-4	177
1471100-1	102A
1471100-8	102A
1471100-9	102A
1471101-2	102A
1471101-3	102A
1471101-4	102A
1471101-15	102A
1471102-41	121
1471104-5	126
1471104-6	126
1471104-7	126
1471104-8	126
1471112-3	129
1471112-7	159
1471112-8	159
1471112-8-9	129
1471112-10	234
1471112-12	129
1471113-2	123A
1471113-3	123A
1471114-1	159
1471115-1	123A
1471115-2	199
1471115-3	199
1471115-4	199
1471115-10	161
1471115-11	199
1471115-12	123A
1471115-13	108
1471115-14	108
1471117-1	124
1471120-7	123A
1471120-8	123A
1471120-8-9	123A
1471120-11	199
1471120-14	128
1471120-15	123A
1471122	199
1471122-6	199
1471122-7	199
1471123-2	128
1471123-3	128
1471123-4	128
1471123-5	128
1471124-5	179

To Be Replaced	ECG Replacement
1471125-3	127
1471132-002	196
1471132-2	184
1471132-3	196
1471132-4	152
1471132-5	196
1471132-6	181
1471133-1	188
1471134	153
1471134-1	189
1471135-001	130
1471135-1	130
1471135-2	181
1471136-3	172A
1471139-1	180
1471140-1	184
1471141-1	185
1471393-4	167
1471405-1	156
1471822-11	110
1471872-002	177
1471872-06	177
1471872-1	177
1471872-2	177
1471872-3	506
1471872-4	177
1471872-5	519
1471872-6	116
1471872-7	177
1471872-8	177
1471872-10	178MP
1471872-11	519
1471872-12	177
1471872-13	177
1471872-14	177
1471872-15	109
1471872-16	177
1471872-17	109
1471872-18	177
1471876-6	178MP
1471878-3	5071A
1471893-4	149A
1471898-3	137A
1471898-4	149A
1471898-5	136A
1471898-8	140A
1471900-2	7400
1471908-1	173BP
1471922-1	112
1472171-32	116
1472434-1	706
1472446	121
1472446-1	121
1472450-1	108
1472460-1	117
1472460-2	177
1472460-3	516
1472460-4	117
1472460-5	117
1472460-9	174
1472460-13	506
1472460-14	156
1472460-16	116
1472474-2	154
1472475-1	199
1472482-1	102A
1472494-1	127
1472495-1	123A
1472500-1	127
1472501-1	159
1472633	161
1472634-1	108
1472636-1	107
1473500-1	123A
1473501-1	159
1473502-1	704
1473502-2	704
1473503	124
1473503-1	124
1473505-1	123A
1473506-1	199
1473508-1	128
1473512-1	121
1473514-1	127
1473515-1	121
1473516-1	129
1473519-1	123A
1473520-1	124
1473523-1	159
1473524-2	108
1473527-1	123A
1473528-1	785
1473529-1	107
1473530-1	108
1473530-2	108
1473532-1	123A
1473533-1	108
1473535-1	319
1473536-001	123A
1473536-1	123A
1473536-2	161
1473537-1	108
1473538-1	123A
1473539-1	123A
1473540-1	159
1473541-1	154
1473543-1	161
1473544-1	107
1473545-1	128
1473546-1	123A
1473546-2	123A
1473546-3	123A
1473547-1	128
1473548-1	123A
1473549-1	159

To Be Replaced	ECG Replacement
1473549-2	159
1473550-1	123A
1473551-1	123A
1473552-1	154
1473553-1	128
1473554-1	123A
1473555-1	123A
1473555-2	123A
1473555-3	128
1473555-i	128
1473556-1	123A
1473557-1	123A
1473558-1	107
1473559-001	159
1473559-1	159
1473560-002	123A
1473560-1	128
1473560-2	128
1473560-3	123A
1473561-001	123A
1473561-1	128
1473562-1	159
1473563-1	159
1473564-1	162
1473565-001	128
1473565-1	128
1473566-1	128
1473567-1	124
1473567-2	184
1473567-4	152
1473568-1	108
1473569-1	123A
1473570-1	159
1473570-2	159
1473571-1	161
1473572-1	123A
1473572-3	128
1473573-1	103A
1473574-1	159
1473576	161
1473576-1	233
1473577-1	161
1473578-1	102A
1473579-1	161
1473580-1	128
1473581-1	159
1473582-1	123A
1473583-7	230
1473583-8	230
1473584-1	124
1473585-1	231
1473585-5	230
1473585-7	230
1473585-8	231
1473586	161
1473586-2	123A
1473588-2	221
1473589-1	123A
1473590-1	151A
1473591-1	159
1473592-1	129
1473593-1	128
1473595-1	123A
1473597-1	159
1473597-2	159
1473598-2	102A
1473599-1	159
1473601	163A
1473601-001	123A
1473601-1	123A
1473601-2	123A
1473603-1	108
1473604-1	172A
1473604-3	108
1473606-1	108
1473608-002	128
1473608-1	128
1473608-2	128
1473608-3	128
1473611	152
1473611-1	152
1473612	152
1473612-1	196
1473612-11	152
1473613-2	191
1473613-3	191
1473613-4	171
1473613-5	128
1473614-1	123A
1473614-2	199
1473614-3	123A
1473615-1	128
1473616-1	129
1473617-1	108
1473618-1	222
1473619-1	5652
1473619-2	5642
1473619-3	5641
1473620-001	159
1473620-1	159
1473621-1	196
1473622	128
1473622-002	128
1473622-1	123A
1473622-2	128
1473623-1	196
1473624-1	197
1473625-001	128
1473625-1	128
1473626-1	123A
1473627-1	159
1473628-1	188
1473628-2	171
1473628-3	188
1473629-1	189

To Be Replaced	ECG Replacement
1473629-3	189
1473631-1	123A
1473632-1	171
1473632-2	186
1473632-3	196
1473633-1	171
1473634-1	165
1473635	222
1473635-1	222
1473635-2	221
1473636-1	124
1473637-1	162
1473638-1	218
1473640-1	196
1473647-1	165
1473648-1	127
1473649-1	165
1473651-1	106
1473652-1	108
1473656-1	182
1473656-2	182
1473656-4	154
1473657-1	229
1473657-2	229
1473665-2	130
1473666-1	129
1473669-1	165
1473669-2	165
1473676-1	233
1473676-1(3rd IF)	233
1473679-1	128
1473680-1	319
1473680-2	319
1473681-1	152
1473681-i	152
1473682-1	185
1473683-1	130
1473687-1	191
1473688-1	5404
1473697-1	159
1473777-2	145A
1474717-2	145A
1474777-002	145A
1474777-1	142A
1474777-2	145A
1474777-3	5103A
1474777-4	147A
1474777-5	5097A&5101A
1474777-7	143A
1474777-11	144A
1474777-14	146A
1474778-013	156
1474778-2	116
1474778-3	116
1474778-4	156
1474778-5	506
1474778-6	506
1474778-7	116
1474778-8	156
1474778-9	507
1474778-10	116
1474778-11	116
1474778-13	156
1474778-14	506
1474778-16	177
1474778-21	506
1474788-10	116
1474872-1	177
1475171-31	116
1475179-1	109
1476049-2	506
1476161-12	506
1476171-11(Diode)	515
1476171-11(Transistor)	104
1476171-12	515
1476171-13(Diode)	506
1476171-13(Transistor)	104
1476171-17	506
1476171-18	506
1476171-19	515
1476171-20	515
1476171-21	156
1476171-22	506
1476171-24	515
1476171-25	506
1476171-26	506
1476171-27	515
1476171-28	116
1476171-29	116
1476171-31	116
1476171-32	506
1476171-33	177
1476171-34	506
1476171-35	515
1476179-001	109
1476179-01	109
1476179-1	109
1476183-2	506
1476183-3	503
1476183-5	506
1476183-6	506
1476183-8	119
1476188-1	123A
1476188-1(Regulator)	5074A
1476690-2	177
1476930	505
1476933-501	505
1476933-502	505
1476933-503	505
1477022-1	177
1477046-1	145A
1477046-4	142A
1477046-5	5085A
1477046-10	5077A
1477081-501	145A

To Be Replaced	ECG Replacement
1478164-1	147A
1478564-1	310
1478564-2	308
1478564-5	310
1478564-6	308
1478564-7	310
1478564-8	308
1490008-1	165
1490880-1	505
1501883	123A
1502039	128
1503097-0	159
1522237-20	123A
1560048	912
1563295-101	123A
1582501	925
1588035-42	177
1596408	123A
1604609-2	909
1611708-2	123A
1612738-1	199
1616226-1	159
1617032	159
1617510-1	123A
1638776-103JS1659	519
1641141-101	177
1641141-102	177
1642606B1	135A
1642606B4	137A
1642606B6	136A
1662258-6	5987
1680008-01	519
1690019-01	123A
1700001	159
1700008	123A
1700019	123A
1700020	229
1700032	229
1700033	229
1700034	159
1700035	311
1700036	152
1700037	195A
1700038	195A
1701790-1	130
1702601-1	130
1780142	159
1780145-1	123A
1780145-2	123A
1780145-2-001	123A
1780169-1	177
1780174-1	519
1780522-1	159
1780522-2	159
1780522-2-001	159
1780724-1	123A
1780738-1	123A
1800002	109
1800006	116
1800009	519
1800012	136A
1800013	140A
1800017	156
1800018	116
1800019	5092A
1800020	5085A
1802520-001	941
1802677-1	923D
1802765	940
1810037	108
1810038	108
1810039	108
1813913-1	177
1815036	108
1815037	108
1815039	108
1815041	123A
1815042	123A
1815043	123A
1815045	108
1815047	108
1815054	123A
1815067	108
1815068	108
1815153	128
1815154	123A
1815154-9	128
1815156	128
1815157	128
1815159	128
1817004	108
1817005	123A
1817005-3	108
1817006	128
1817006-3	108
1817007	123A
1817008	108
1817017	103A
1817045	108
1817108	123A
1819045	108
1820829	128
1826065-1	532
1826065-2	532
1826065-3	531
1826860-1	532
1827322	129
1833404	223
1835667	197
1840399-1	123A
1846282-1	123A
1846794-1	177
1851490	5995
1851515	123A
1851516	175

To Be Replaced	ECG Replacement
1851517	181
1851518	175
1861223-1	159
1872425-1	909
1887048	120
1895989-1	9094
1895991-1	9946
1895992-1	9962
1895993-1	9930
1895994-1	9932
1895995-1	9933
1905490-1	519
1908519	519
1914062-1	9936
1944313A1	128
1944748	179
1945294	159
1945295A1	145A
1950003	519
1950039	123A
1950052	159
1950056-1	159
1950060	177
1950160	152
1956016	102A
1956197	5072A
1956486	116
1960023	123A
1960083-1	128
1960085-2	154
1960177-2	123A
1960584	121
1960632	179
1960642	151A
1960643	102A
1961479	121
1961480	121
1961835	121
1961837	102A
1961843	116
1962323	127
1962326	179
1962594	116
1965016	129
1965017	121
1965019	139A
1966079	121
1966808	116
1967784	181
1967799	128
1967799-1	128
1967801	128
1967813	116
1968958	123A
1968959	128
1968977	130
1969113	124
1969281	159
1969497	116
1971296	175
1971487	223
1971489	128
1971503	223
2000287-28	102A
2000433-150	109
2000625-31	102A
2000625-32	102A
2000625-33	102A
2000625-34	102A
2000625-36	116
2000626-32	116
2000646-103	123A
2000646-104	160
2000646-105	108
2000646-106	126
2000646-107	123A
2000646-108	102A
2000646-109	126
2000646-110	127
2000646-111	158
2000646-113	121
2000646-115	116
2000646-119	116
2000646-120	116
2000648-21	160
2000648-22	160
2000648-23	126
2000648-26	109
2000648-120	116
2000752-80	128
2000757	113
2000757-18	109
2000757-79	113
2000757-80	108
2000804-7	108
2000804-8	108
2000804-9	102A
2001653	102A
2001653-20	126
2001653-21	126
2001653-22	100
2001653-23	102A
2001653-24	102A
2001653-58	160
2001653-59	160
2001786-134	109
2001786-139	115
2001786-141	116
2001786-142	125
2001786-169	358
2001786-207	116(3)
2001809-47	102A
2001809-48	102A
2001809-48A	102A
2001809-48B	102A

To Be Replaced	ECG Replacement
2001812-65	100
2002151-020	109
2002151-18	160
2002151-18A	160
2002151-19	102A
2002151-20	109
2002152-14	102A
2002153-58	160
2002153-59	160
2002153-60	160
2002153-71	102A
2002153-76	160
2002153-77	123A
2002153-78	102A
2002153-83	103A
2002207-2	614
2002209-1	139A
2002209-4	137A
2002209-5	140A
2002209-7	5077A
2002209-9	140A
2002209-10	142A
2002209-11	5072A
2002210-110	102A
2002211-24	102A
2002211-25	102A
2002331-46	143A
2002332-53	108
2002332-54	108
2002332-55	108
2002332-56	108
2002332-57	116
2002332-58	116
2002336-19	126
2002336-20	109
2002336-115	116
2002402	177
2002402-29	116
2002403-19	126
2002620-18	108
2002620-19	108
2002621-2	123A
2003069	116
2003069-1	125
2003069-2	177
2003069-5	601
2003069-6	177
2003069-58	605
2003073-0701	123A
2003073-0702	159
2003073-8	102A
2003073-9	123A
2003073-10	123A
2003073-11	160
2003073-12	160
2003073-13	160
2003073-14	102A
2003073-15	102A
2003073-16	103A
2003073-67	116
2003073-68	116
2003073-91	130
2003073-91A	130
2003168-135	123A
2003168-136	123A
2003229-25	123A
2003239-65	123A
2003342-109	108
2003342-244	107
2003779-22	107
2003779-23	107
2003779-24	107
2003779-25	107
2003779-26	139A
2004107-40	113
2004357-106	109
2004358-123	102A
2004358-142	116
2004358-168	102A
2004746-87	124
2004746-114	108
2004746-115	108
2004746-116	129
2004746-117	129
2005779-26	138A
2006226-14	102A
2006227-51	123A
2006334-31	158
2006334-115	123A
2006334-155	128
2006422-132	109
2006422-133	116
2006431-44	108
2006431-45	123A
2006431-46	123A
2006431-49	123A
2006431-50	109
2006436-35	186
2006436-36	186
2006436-37	129
2006436-38	116
2006436-40	128
2006441-91	116
2006441-113	102A
2006441-122	109
2006463-89	116
2006512-40	116
2006512-79	113
2006512-80	113
2006513-19	108
2006513-39	107
2006513-133	158
2006514-59	131
2006514-60	123A
2006514-61	195A

To Be Replaced	ECG Replacement
2006582	116
2006582-20	109
2006582-21	125
2006582-23	116(4)
2006582-24	116(4)
2006582-25	123A
2006582-101	161
2006607-59	121
2006607-60	123A
2006607-61	195A
2006607-62	237
2006607-63	138A
2006613-77	123A
2006623-47	132
2006623-48	177
2006623-49	116
2006623-88	184
2006623-128	195A
2006623-145	123A
2006623-148	128
2006627-54	177
2006681-93	107
2006681-94	107
2006681-95	107
2006681-96	123A
2006681-120	158
2008292-56	107
2008292-87	126
2008292-88	177
2008292-89	116(2)
2008293-111	158
2008299-1	107
2008300-105	1003
2008302-41	116
2010088-49	123A
2010499-52	123A
2010952-14	103A
2010957-49	116
2010967-83	177
2010967-84	136A
2013019-117	116
2014400	519
2041614	123A
2047102	102
2056606-0701	159
2057013-0004	159
2057013-0007	159
2057013-0008	159
2057013-0012	159
2057013-0701	159
2057013-0702	159
2057013-0703	159
2057062-0702	116
2057199-070BA	130
2057199-0700	130
2057199-0701	130
2057199-701	130
2057323-0500	130
2057323-0501	130
2060041	116
2068491-704	221
2068510-0701	9936
2068510-0702	9946
2068510-0703	9962
2068510-0704	9093
2068510-0705	9099
2076393	126
2076403	160
2076403-0703	160
2076945-0701	102A
2090056-1	104
2090056-5	104
2090056-27	104
2090924-0008	102A
2090924-008	102A
2090924-6	102A
2090924-8	102A
2090924-8A	102A
2090924B	102A
2091211-0014	100
2091217-0014	160
2091241-0005	160
2091241-005	126
2091241-0013	100
2091241-0014	100
2091241-0015	100
2091241-0018	102A
2091241-0719	126
2091241-1	100
2091241-2	100
2091241-3	100
2091241-4	100
2091241-5	126
2091241-5A	126
2091241-6	100
2091241-7	100
2091241-8	100
2091241-9	102A
2091241-10	100
2091241-11	100
2091241-12	100
2091241-13	100
2091241-13A	100
2091241-14	100
2091241-15	100
2091241-15A	100
2091247-005	160
2091260-1(NPN)	103A
2091260-1(PNP)	102A
2091260-2(NPN)	103A
2091260-2(PNP)	102A
2091260-3(NPN)	103A
2091260-3 (PNP)	102A
2091578-0702	102A
2091578-1	102A

To Be Replaced	ECG Replacement
2091858-0712	121
2091858-11	121
2091859-0008	104
2091859-0011	121
2091859-0025	104
2091859-0711	108
2091859-0712	121
2091859-0713	121
2091859-0714	121
2091859-0715	121
2091859-0716	121
2091859-0717	121
2091859-0718	121
2091859-0720	104
2091859-0723	121
2091859-2	104
2091859-4	104
2091859-6	121
2091859-8	121
2091859-9	121
2091859-10	104
2091859-11	104
2091859-16	121
2091859-25	121
2091959-16	121
2092055-0001	109
2092055-0002	5072A
2092055-0007	110MP
2092055-0010	109
2092055-0016	136A
2092055-0017	5072A
2092055-0018	5071A
2092055-0024	5082A
2092055-0027	5072A
2092055-0708	112
2092055-0710	5071A
2092055-0712	5072A
2092055-0713	109
2092055-0714	123A
2092055-0714(Diode)	177
2092055-1	109
2092055-5	138A
2092055-7	109
2092417-005	160
2092417-0017	107
2092417-0018	107
2092417-0019	107
2092417-0704	160
2092417-0707	160
2092417-0708	160
2092417-0709	160
2092417-0710	160
2092417-0711	161
2092417-0712	161
2092417-0713	161
2092417-0714	161
2092417-0715	161
2092417-0716	161
2092417-0717	160
2092417-0719	123A
2092417-0720	123A
2092417-0721	123A
2092417-0724	123A
2092417-0725	123A
2092417-1	160
2092417-2	160
2092417-3	160
2092417-4	160
2092417-5	160
2092417-6	160
2092417-7	160
2092417-8	160
2092417-9	160
2092417-17	123A
2092417-18	123A
2092417-19	123A
2092418-0022	161
2092418-0023	161
2092418-0024	161
2092418-071	160
2092418-0710	160
2092418-0711	101
2092418-0712	160
2092418-0715	108
2092418-0716	161
2092418-0717	161
2092418-0718	161
2092418-0719	161
2092418-0720	161
2092418-0721	161
2092418-0724	108
2092418-1	160
2092418-2	160
2092418-5	160
2092418-6	160
2092418-7	160
2092418-8	160
2092418-10	160
2092418-11	160
2092605-0705	123A
2092608-22	123A
2092609	123A
2092609-0001	123A
2092609-0002	123A
2092609-001	123A
2092609-0022	123A
2092609-0023	123A
2092609-0024	123A
2092609-0025	159
2092609-0026	123A
2092609-0027	123A
2092609-0028	123A
2092609-0705	123A
2092609-0706	123A
2092609-0707	123A

To Be Replaced	ECG Replacement
2092609-0713	123A
2092609-0715	123A
2092609-0718	123A
2092609-0720	123A
2092609-0721	123A
2092609-1	123A
2092609-2	123A
2092609-3	123A
2092609-5	123A
2092693-0724	107
2092693-0725	107
2092693-0734	159
2092693-1	102A
2092693-2	160
2092693-3	160
2092693-4	160
2092693-8	102A
2092693-9	160
2093308-070	108
2093308-0700	108
2093308-0701	123A
2093308-0702	123A
2093308-0703	123A
2093308-0704	107
2093308-0704A	108
2093308-0705	107
2093308-0705A	108
2093308-0706	107
2093308-0706A	108
2093308-0708	123A
2093308-0725	107
2093308-1	108
2093308-2	108
2093308-3	108
2095083	109
2096700	129
2096700-TM18	129
2097013-0702	128
2125310	199
2132523-1	159
2132524-1	519
2132763-1	912
2160153	725
2182124-1	519
2185494-1	519
2185494-2	519
2206582-22	116(4)
2227367	176
2234494	9900
2234496	9914
2234497	9926
2243255-1	102A
2295361	9962
2311598	506
2314009	127
2316183	161
2320011	102A
2320022	123A
2320031	107
2320041	233
2320041H	161
2320042	107
2320043	107
2320051	154
2320051H	154
2320062	108
2320063	108
2320073	108
2320083	152
2320084	175
2320092	131
2320111	123A
2320123	123A
2320141	233
2320141H	161
2320154	100
2320161	159
2320161(RCA)	160
2320162	159
2320191	154
2320201	127
2320221	124
2320222	124
2320223	124
2320228	124
2320233	128
2320242	129
2320243	129
2320261	102A
2320271	162
2320273	162
2320281	164
2320291	165
2320299	165
2320302	102A
2320302H	102A
2320331	103A
2320413	123A
2320422	158
2320422-1	102A
2320423	102A
2320432	152
2320441	123A
2320471	319
2320471-1	107
2320471H	107
2320471(Last IF)	233
2320482	152
2320482H	152
2320483	152
2320485	152
2320486	152
2320492	102A
2320512	100
2320513	102A

To Be Replaced	ECG Replacement
2320514	160
2320514-1	100
2320515	102A
2320541	121
2320591	289
2320591-1	123A
2320595	123A
2320596	289
2320598	289
2320602	152
2320631	290
2320632	193
2320637	294
2320643	289
2320644	289
2320646	289
2320646-1	128
2320647	289
2320647-1	128
2320651	152
2320652	152
2320664	192
2320671	159
2320681	159
2320696	123A
2320696-1	123A
2320833	127
2320843	184
2320845	184
2320846	184
2320855	185
2320884	153
2320892	154
2320931	124
2320946	128
2320961	163A
2320963	165
2320981	107
2320994	124
2321001	124
2321095	198
2321101	154
2321111	288
2321112	288
2321121	163A
2321211	198
2321221	198
2321241	283
2321264	5455
2321281	153
2321291	124
2321301	291
2321302	291
2321305	291
2321321	129
2321322	129
2321351	129
2321372	162
2321381	292
2321403	124
2321412	198
2321433	291
2321472	154
2321511	108
2321521	234
2321541	123AP
2321561	165
2321591	291
2321652	280
2326953	123A
2326991	124
2327022	128
2327023	123A
2327031	116
2327041	116
2327052	130
2327053	130
2327061	124
2327071	142A
2327073	5081A
2327074	5022A
2327075	5084A
2327076	147A
2327077	5075A
2327078	5074A
2327122	123A
2327132	132
2327142	132
2327152	186
2327153	186
2327172	130
2327182	124
2327203	186
2327206	152
2327212	703A
2327262	159
2327282	129
2327283	129
2327292	128
2327293	128
2327302(Hitachi)	703A
2327312	1039
2327332	128
2327363	123A
2327387	159
2327403	128
2327411	1041
2327422	720
2327431	222
2330011	166
2330011H	166
2330021	138A
2330032	505
2330033	503
2330034	504

To Be Replaced	ECG Replacement
2330101	506
2330191	506
2330201	116
2330211	506
2330241	142A
2330251	506
2330251H	116
2330251(POWER)	156
2330252	116
2330253	506
2330254	116
2330256	506
2330302	5071A
2330302H	138A
2330305	144A
2330307	5072A
2330332	156
2330351	177
2330352	177
2330356	506
2330361	166
2330362	116
2330381	504
2330551	506
2330553	116
2330561	116
2330562	116
2330564	506
2330596	289
2330611	605
2330612	116
2330631	5071A
2330632	5071A
2330634	138A
2330643	5071A
2330721	116
2330752	174
2330771	156
2330773	156
2330791	5071A
2330921	502
2331121	506
2331141	506
2331142	116
2331152	142A
2331161	140A
2331164	140A
2331174	5074A
2331201	116
2331351	519
2331381	506
2331491	5069A
2331493	135A
2331502	156
2337011	177
2337063	5080A
2337065	5075A
2337071	116
2337101	142A
2347021	116
2360021	1061
2360042	712
2360042(Hitachi)	712
2360092	712
2360141	1004
2360151	1213
2360171	1004
2360201	712
2360221	1094
2360231	1121
2360271	1258
2360281	1251
2360291	1257
2360361	1004
2360391	712
2360401	1004
2360431	1196
2360501	712
2360511	1004
2360561	74107
2360924-5601	123A
2390022	5404
2391342	910
2391773	909
2392152	941M
2396475	923
2402277	804
2412275	804
2412949-0001	129
2469749	123A
2469755	123A
2469936-1	128
2479692	123A
2479836	123A
2485076-2	128
2485076-3	128
2485077-2	128
2485077-3	128
2485078-1	123A
2485078-2	123A
2485078-3	123A
2485079-1	123A
2485079-2	123A
2485079-3	123A
2485080	177
2485080(Diode)	109
2486836	116
2487305	177
2487340	159
2487341	159
2487424(NPN)	192
2487424(PNP)	159
2495012	126
2495012	126
2495013	126

To Be Replaced	ECG Replacement
2495014	102A
2495078	160
2495079	160
2495080	102A
2495082	160
2495083	110
2495083-0	109
2495083-2	109
2495084	109
2495166-1	108
2495166-2	123A
2495166-4	123A
2495166-8	123A
2495166-9	123A
2495200	126
2495376	160
2495377	160
2495378	126
2495379	126
2495380	109
2495383	109
2495388	102A
2495388-1	102A
2495388-2	102A
2495488-1	126
2495488-2	126
2495520	161
2495521	161
2495521-1	123A
2495522-1	161
2495522-4	123A
2495523-1	161
2495529(Arvin)	128
2495529 (Diode)	109
2495567-2	102A
2495567-3	102A
2495568	158
2495568-2	102A
2496125-2	123A
2496436	109
2497094-1	161
2497094-2	161
2497473	102A
2497473-1	102A
2497496	102A
2497888	158
2498163	128
2498456-2	107
2498457-2	123A
2498482-2	107
2498507-1	108
2498507-2	108
2498507-3	108
2498508-2	107
2498508-3	107
2498512	159
2498513	116
2498530	109
2498665-1	199
2498665-2	199
2498665-3	199
2498837	160
2498837-4	102A
2498902-1	107
2498902-2	107
2498903-1	107
2498903-3	107
2498904-3	123A
2498904-4	123A
2498904-6	123A
2499950	199
2500389-432	9932
2500389-444	9944
2500390-435	9935
2500390-436	9936
2500390-437	9937
2500390-446	9946
2500390-449	9949
2500390-461	9961
2500390-462	9962
2500391-445	9945
2500747	9932
2501337-433	9933
2501549-341	703A
2501557-430	9930
2501557-436	9936
2501557-437	9937
2501557-446	9946
2501557-449	9949
2501557-461	9961
2501557-462	9962
2503134-105	159
2505207	199
2505209	123A
2509319	124
2520063	123A
2521108-1	159
2530733	123A
2545989-2	128
2546059	519
2546220-1	910
2552007	156
2596071	108
2604688-3	909
2605022	128
2608169-1	128
2610023-01	910
2610023-02	910D
2610032	177
2610043-03	941M
2610153	725
2610154-01	923
2610783	7402
2610784	7496
2610786	7400

To Be Replaced	ECG Replacement
2610788	74121
2621499-1	177
2621567-1	123A
2621570	159
2621764	123A
2621786-1	519
2621811	106
2622284	123
2635012	177
2640830-1	123
2640843-1	123A
2652613	9944
2652614	9945
2656211-1	9930
2656212	9946
2656212-1	9946
2656213	9944
2656213-1	9944
2656214	9945
2656214-1	9945
2656747	9944
2656748	9946
2666293	7482
2666294-1	7483
2666294-1	7483
2666307-1	128
2709759	309K
2710002	941
2712080	123A
2729789	176
2760438-1	177
2777301	128
2780312	358
2797658-616030A	941
2808577	9932
2855296-01	102A
2865101	192
2865141	519
2868536-1	7474
2875493	152
2887425RB	311
2898431-2	9946
2899000-00	9946
2899001-00	9962
2899002-00	9930
2899003-00	9936
2899004-00	9945
2899018	911
2899414	923D
2902798-2	915
2903993-1	159
2903993-i	159
2904014	121
2928054-1	128
2970038H05	100
3004856	102A
3005300	5882
3005861	123A
3006206-00	784
3006892-00	910
3006892-01	910D
3007359-00	9937
3007359-01	9949
3007359-02	9963
3007359-03	9932
3007472-00	9945
3007473-00	9932
3007473-01	9932
3007474-00	9930
3007474-01	9930
3007475-00	9962
3007475-01	9962
3007476-00	9946
3007476-01	9946
3007477-00	9936
3007477-01	9936
3007572-00	9933
3007573-00	9093
3007579	912
3007579-00	912
3007604-00	9135
3007680-00	941
3007680-01	941D
3008321-00	309K
3008340	923D
3034725-1	903
3068305-2	123A
3110883-P01	177
3130006	121
3130011	102
3130025	102
3130053	128
3130057	175
3130058	130
3130060	102
3130090	181
3130091	130
3130092	128
3130093	175
3130104	181
3130109	121
3146977	130
3146977A	130
3152159	175
3152170	130
3152170A	130
3160000-00-08A	519
3170717	154
3170757	154
3172626	9933
3172627-2	9949
3172629-1	9930
3172629-2	9961
3172630	9944
3172631	9948

To Be Replaced	ECG Replacement
3172632-1	9962
3172638	9950
3176135-1	9936
3176135-2	9937
3177200	9932
3180006	519
3181972	108
3195638	177
3201104-10	123A
3263029-10	519
3267390-01	74H40
3311133	519
3403787	123A
3403866-3	128
3404114-1	102
3404114-2	102
3404520-81	126
3404520-301	128
3404520-601	221
3406519-31	726
3406519-31(RCA)	726
3412004-1912	133
3412907-1	128
3412951	904
3412986-1	903
3430063	116
3430063-1	5804
3430063-i	5804
3438095	152
3438854	163A
3438867	152
3450842-10	154
3450842-20	154
3450842-30	154
3457107-1	123A
3457632-5	123A
3457633-1	128
3457633-2	128
3457697-1	726
3457845-1	346
3457846-1	348
3457846-2	348
3457847-2	351
3457847-3	351
3457847-4	350
3457847-6	351
3457936-1	234
3457964-1	350
3457964-2	350
3457964-3	350
3457964-4	350
3458267-1	128
3458573-1	192
3459332-1	161
3460550-1	160
3460550-3	160
3460550-4	160
3460553-2	121
3460553-4	121
3460679-1	102A
3460758-2	5801
3462221-1	121
3462306-1	121
3463098-1	5870
3463098-2	5871
3463099-1	128
3463100-1	175
3463101-1	130
3463604-1	175
3463604-2	175
3463609-2	161
3464482-1	102A
3464611	519
3464648-1	223
3464648-2	223
3468068-1	161
3468068-2	161
3468068-3	161
3468068-4	161
3468071-1	175
3468182-1	123A
3468182-2	123A
3468183-1	159
3468242-1	159
3468242-2	123A
3468841-1	175
3520025-001	9936
3520041-001	7400
3520042-001	7410
3520043-001	7473
3520044-001	7440
3520045-001	7451
3520046-001	7474
3520047-001	7430
3520048-001	7404
3520050-001	7472
3539307-001	161
3539307-002	161
3596061	177
3596062	109
3596063	159
3596067	108
3596068	108
3596069	108
3596070	108
3596071	108
3596072	108
3596091	196
3596092	196
3596100	197
3596101	197
3596116	128
3596117	123A
3596118	159
3596260	108

To Be Replaced	ECG Replacement
3596261	108
3596338	123A
3596339	123A
3596340	129
3596341	129
3596353	736
3596354	723
3596398	5071A
3596401	222
3596402	222
3596435	614
3596440	107
3596446	152
3596447	152
3596448	152
3596451	153
3596452	153
3596453	153
3596453(Zener)	151A
3596454	153
3596454(Zener)	151A
3596559	177
3596570	123A
3596808	726
3596809	789
3596810	788
3597049	1115
3597103	108
3597104	108
3597114	107
3597260	108
3597261	108
3597280	1115
3598173	1115
3610001-001	9923
3610003	9914
3610005	9900
3650238A	159
3670724H	123A
3671857E	124
3673351K	289
3673354G	289
3680322-3	5992
3700072	123A
3700085	121
3700109	123A
3700135	130
3700144	159
3700162	128
3700163	129
3700164	130
3700171	123A
3700219	130
3700228	130
3700249	159
3700258	129
3700279	123A
3720923-1	320
3720923-2	320
3720923-3	320
3720923-4	320
3720968-1	923
3723012	367
3723103	367
3726117-1	278
3727104-1	352
3731132-1	123A
3731133-1	159
3731313-1	121
3731418-1	129
3731418-2	128
3731418-3	129
3731418-4	129
3755171	152
3755862	199
3755864	177
3939307-002	161
4000921	199
4002862-0001	123A
4010577-0701	519
4013373-0701	9974
4017621-0701	123A
4028839	161
4031936-0701	159
4032122	716
4036392-P2	140A
4036598-P1	121
4036598-P2	102A
4036612-P1	100
4036612-P2	100
4036707-P1	100
4036707-P2	100
4036715-P1	160
4036715-P2	160
4036733-P1	121
4036749-P1	101
4036749-P2	101
4036754-P1	103
4036754-P2	103
4036831-P1	105
4036832-P1	105
4036887-P8	123A
4036923-P1	160
4036923-P2	160
4036924-P1	123A
4036924-P2	123A
4036937-P1	100
4036937-P2	100
4036962-P1	160
4036962-P2	160
4036963-P1	160
4036963-P2	160
4036965-P1	160
4036965-P2	160
4037145-P1	102A

To Be Replaced	ECG Replacement
4037145-P2	102A
4037289-P1	101
4037289-P2	101
4037325-P1	116
4037410-P1	160
4037410-P2	160
4037413-P1	137A
4037586-P1	123A
4037586-P2	123A
4037594-P1	121
4037607-P1	121
4037647-P1	186
4037647-P2	186
4037764-P1	160
4037764-P2	160
4037800-P1	123A
4037800-P2	123A
4037804-P1	102A
4037804-P2	102A
4037839-P1	101
4037839-P2	101
4037993-P1	100
4037993-P2	100
4038256-P1	103A
4038256-P2	103A
4038260-P1	100
4038260-P2	100
4038264-P1	101
4038264-P2	101
4038359-P1	160
4038359-P2	160
4038406-P1	160
4038406-P2	160
4080187-0502	152
4080187-0504	130
4080187-0506	196
4080187-0507	196
4080320-050B	130
4080320-0501	130
4080320-0504	130
4080627-0501	175
4080835-0002	196
4080838-0001	175
4080838-0002	175
4080838-002	196
4080838-2	175
4080838-3	175
4080866-0001(Metal)	130
4080866-0002(Metal)	130
4080866-0006(Metal)	130
4080866-0006(Plastic)	152
4080866-0007	175
4080866-000A	130
4080866-003	152
4080866-006	152
4080866-009	152
4080866-0012	196
4080866-0013	152
4080866-1	175
4080866-2	175
4080866-4	152
4080866-8006	130
4080873-0001	184
4080879-0001	152
4080879-0006	196
4080879-0011	196
4080879-0015	175
4082501-0001	104MP
4082501-0001A	121
4082501-001	104
4082626-0001	912
4082664-0001	726
4082665-0001	723
4082665-0002	723
4082665-0003	723
4082665-1	723
4082665-2	723
4082665-3	723
4082671-0002	172A
4082748-0002	136A
4082799-0001	789
4082799-0002	789
4082799-1	789
4082799-2	789
4082802-0001	781
4082802-0002	781
4082802-1	781
4082802-2	781
4082873-0001	197
4082886-0002	184
4082886-001	130
4082886-002	130
4082886-3	130
4084114-0001	222
4084114-0002	222
4084117-0001	949
4084117-0002	949
4089549-0001	949
4089549-001	949
4090187-0502	130MP
4101685	116
4350052-1	703A
4361620	130
4420022-P1	5995
4420022-P2	5995
4450023	130
4450023-007	130
4450023-P3	130
4450023-P4	130
4450023P5	130
4450023-P6	130
4450026-P5	128
4450028-P1	5547
4450028-P2	5547
4450028P4	5547

To Be Replaced	ECG Replacement
4450040P1	223
4450300-1	5675
4450300P2	5626
4450300P3	5626
4450303-001	5642
4450303-002	5642
4511424	7432
4550106-001	152
4550106-003	152
4613443	1095
4663001A905	7474
4663001A909	7404
4663001A911	7440
4663001A912	7410
4663001A915	7430
4663001D907	7400
4800062	333
4804427	346
4806080	348
4806082	351
4806088	320
4806095	354
4813466	123A
4822354	130
4822354J	130
4832800	181
4865837A02	109
4882238F01	116
4906071	123A
4906072	123A
4906073	123A
4906093	199
4907976	102A
4914296	9906
4915702	7416
4915705	7411
4999774	121
4999885	213
4999887	102A
5001266-3	177
5049911	128
5073004	102A
5076204	74S00
5076205BZ	74S20
5113642	909
5165440	9936
5175460	7408
5294477-1	123A
5294477-2	123A
5300073-15	145A
5300113-1	116
5301710-001	116
5320003	175
5320004	289
5320011	102A
5320022	289
5320023	289
5320023H	123A
5320024	123A
5320026	123A
5320031	220
5320032	132
5320042H	159
5320043H	159
5320051	161
5320064	289
5320064H	123A
5320067	289
5320074	123A
5320101	102A
5320111	129
5320141	102A
5320151	237
5320241	123A
5320295	102A
5320295H	103A
5320296	102A
5320305	103A
5320305H	102A
5320306	103A
5320326	123A
5320326H	107
5320328	108
5320361	103A
5320372	123A
5320372H	123A
5320373	123A
5320422H	152
5320432	152
5320433	152
5320475	103A
5320485	102A
5320492H	152
5320501	195A
5320511	237
5320583	133
5320592	290
5320593	290
5320612	128
5320613	289
5320632	187
5320642	186
5320643	184
5320651	289
5320671	152
5320702	132
5320723	185
5320772	229
5320791	235
5320851	123A
5320861	107
5320872	102A
5320921	184
5320942	312
5320943	312
5320944	312
5320961	292
5321171	237
5321184	159
5321212	287
5321214	287
5321253	129
5321261	123A
5321291	123AP
5321311	295
5321321	235
5321422	312
5321431	108
5321491	236
5321492	236
5321501	133
5321504	312
5330001	125
5330011	139A
5330012	139A
5330031	116
5330041	116
5330041H	116
5330041(HR-5A)	125
5330042	116
5330051	5071A
5330054	5022A
5330054H	5022A
5330059	5080A
5330101	116
5330101H	116
5330102	116
5330102H	116
5330104	125
5330131	177
5330133	177
5330212H	177
5330261	177
5330261H	177
5330312	5071A
5330322	5073A
5330323	139A
5330331	109
5330332	109
5330334	177
5330335	109
5330336	116
5330341	125
5330371	116
5330372	116(2)
5330381	116
5330392	136A
5330431	116
5330551	5074A
5330552	5074A
5330571	519
5330572	519
5330661	614
5330721	109
5330731	109
5330732	109
5330761	116
5330842	136A
5330851	614
5330852	614
5331001	614
5340001	177
5340001H	177
5340001(Transistor)	123A
5340021	116
5340022	116
5340022H	177
5340051	177
5340111	177
5340113	601
5350121	1029
5350132	1030
5350135	1030
5350136	1030
5350136	1030
5350141	1031
5350151	1032
5350152	1032
5350161	1033
5350182	1075A
5350211	1043
5350231	1058
5350321	1169
5350491	1169
5350661	613
5351041	722
5351042	722
5351051	1041
5351061	1072
5351062	1072
5351252	129
5357561(Transistor)	130
5359031	7400
5359251	1255
5359261	1254
5359262	1254
5359281	981
5359331	977
5406665-P2	102A
5406665-P5	102A
5490307-P2	140A
5490307-P3	142A
5490307-P4	145A
5490415-P4	116
5490459-P1	116
5490459-P2	116
5490459-P3	116
5490459-P4	116
5490804-P1	116
5490804-P2	116
5490804-P3	116
5490804-P4	116
5490804-P5	116
5490804-P6	116
5490860P1	105
5491236-P1	109
5491236-P2	109
5491338-P1	135A
5492153-1	105
5492639-P1	103
5492639-P2	103
5492653-P1	101
5492653-P2	101
5492655-P1	101
5492655-P2	101
5492655-P3	101
5492655-P4	101
5492655-P5	101
5492655-P6	101
5492659-P1	101
5492659-P2	101
5493158-1	121
5493159-P1	5874
5493957-P1	160
5493957-P2	160
5493957-P3	160
5493957-P5	160
5493957-P6	160
5494922-P1	116
5494922-P2	116
5494922-P3	116
5494922-P4	116
5494922-P5	116
5494922-P6	116
5494922-P7	116
5494922-P8	116
5495178-P1	5874
5495922-P1	5874
5495922-P2	5874
5495923-P1	5545
5496438-P1	146A
5496663-P1	121
5496665-P1	102
5496665-P2	102
5496665-P3	102
5496665-P4	102
5496665-P5	102
5496665-P6	102
5496666-P1	102
5496666-P2	102
5496666-P3	102
5496666-P4	102
5496666-P5	102
5496666-P6	102
5496666-P7	102
5496666-P8	102
5496667-P1	102
5496667-P2	102
5496668-P1	105
5496774-P1	102
5496774-P2	102
5496774-P3	102
5496774-P4	102
5496774-P6	102
5496839-P1	102
5496939-P1	121
5496939-P2	121
5496947-P3	146A
5518017	220
5573505-1	519
5573505-2	519
5729031	105
5760004-021	318
5760004-053	352
5955748	102A
5955749	116
5958539	176
5983945A	105
5985432	105
5988414	105
5988977	105
5989171	105
5989615	105
5989692	105
5989693	105
6088501-3	912
6100724-2	100
6101161-1	130
6142190	5883
6207159	1243
6208839	123A
6212096	152
6212839	123A
6212922	108
6218945	123A
6460006	102
6460037	102
6480000	130
6480001	121
6480004	121
6480006	128
6490001	175
6494030	223
6846503	116
6902021H25	152
6902021H26	153
6933243-001	175
6984590	123A
6984600	123A
6993400	159
6993630	159
6993650	123A
7002453	123A
7011200-02	9933
7011201-02	9949
7011203-02	7475
7011203-03	7475
7011507	123A
7011507-00	123A
7011515	129
7012109-01	923D
7012126	177
7012128	9936
7012128-02	9936
7012130	9109
7012131	9112
7012132	7482
7012133-02	7483
7012142-03	74193
7012157	519
7012166	7402
7012167-02	7490
7012411	129
7020202	159
7020203	153
7023416-00	116
7026011	108
7026012	108
7026013	108
7026014	123A
7026015	123A
7026016	123A
7026018	130
7026019	129
7026020	123A
7026024	152
7027002	116
7027005	116
7027023	116
7027031	116
7027036	113
7027038	116
7027039	116
7030105	102A
7043216	116
7043261	116
7070692	116
7071021	123A
7071031	123A
7090612	519
7100460	109
7100628	116
7100630	116
7116060	110
7121105-01	123A
7129386-P2	109
7141123-1	177
7200953	116
7201090	5072A
7201212	117
7202782	5072A
7210027-003	102
7210036-001	102
7269847	103A
7274653	121
7276211	100
7276605	105
7277066	103A
7278421	100
7278422	102A
7278423	102A
7279003	105
7279005	105
7279007	105
7279009	105
7279011	105
7279013	105
7279017	105
7279025	105
7279027	105
7279033	105
7279039	104
7279049	104
7279069	179
7279073	105
7279076	105
7279281	176
7279293	105
7279298	105
7279379	100
7279497	116
7279566	105
7279779	126
7279779(G.M.)	123A
7279780	160
7279781	160
7279782	100
7279788	100
7279789	100
7279793	105
7279893	109
7279940	100
7279941	102A
7280281	105
7281307	100
7281308	100
7281309	100
7281310	102A
7281806	128
7281891	100
7282315	105
7282358	109
7283377	110MP
7284137	123A
7284513	160
7284751	102A
7285354	5982
7285663	121
7285774	104
7285776	121
7285778	104
7286858	123A
7287079	5072A
7287107	179
7287110	121
7287112	179
7287117	179
7287452	123A
7287940	126
7288072	105
7288073	105
7288076	105
7288079	105
7289041	121
7289047	104
7289097	179
7290593	121
7290594	104
7291252	104
7292308	160
7292683	179
7292684	127
7292689	179
7292690	121
7292955	121
7292956	330
7293818	162
7293819	162
7294133	102A
7294796	121
7295910	161
7295195	108
7295196	108
7295197	123A
7296314	123A
7296476	5072A
7296811	123A
7297043	104
7297053	123A
7297054	123A
7297092	104
7297093	104
7297258	5072A
7297347	179
7297348	127
7297980	161
7298079	121
7299325	116
7299720	105
7299771	121MP
7299780	179
7299803	121MP
7301660	179
7301661	179
7301664	162
7301665	162
7301666	162
7302024	159
7302340	117
7302699	162
7303105	102A
7303120	123A
7303304	162
7304149	163A
7304380	123A
7304971	5414
7305468	107
7305469	5072A
7305476	726
7306982	130
7309160	130
7311074	128
7311325	709
7311350	128
7312294	718
7313063	162
7313568	721
7314584	123A
7397027	703A
7492377-5	142A
7492377-P1	135A
7492377-P10	135A
7528046-P4	9932
7528048-P4	9946
7528153-P4	9948
7528156P1	910
7528156-P3	9910
7528157P1	909
7528158-P4	9910
7528159-P4	9944
7528160-P4	9951
7528374P3	9951
7570003	121
7570003-01	121
7570004	123A
7570004-01	123A
7570005	123A
7570005-01	123A
7570005-02	123A
7570005-03	123A
7570008	123A
7570008-01	123A
7570008-02	123A
7570009	128
7570009-01	123A
7570009-21	123A
7570011-01	125
7570011-02	125
7570013	159
7570013-01	159
7570014	5802
7570014-02	109
7570014-05	116
7570015-34	116
7570016	109
7570016-02	109
7570016-03	109
7570021-12	146A
7570021-21	146A
7570022-01	175
7570024-02	116
7570030-01	185
7570031-01	152
7570032-01	129
7570215-21	177
7570215-24	116
7570215-34	116
7571329-01	166
7576004-01	159
7576015-01	123A
7576015-02	199
7576015-03	199
7576015-04	199
7576015-05	199
7576016-01	128
7601010	128
7660043	177
7739393	725
7777146-P2	109
7777146-P3	109
7777146-P4	109
7777146-P23	109
7840540-1	123A
7851316-01	102A
7851317-01	102A
7851318-01	103A
7851319-01	103A
7851320-01	158
7851321-01	103A
7851322-01	104
7851323	160
7851324-01	123A
7851325	123A
7851326	123A
7851327	123A
7851328-01	169
7851329-01	166
7851379-01	123A
7851380-01	123A
7851441-01	116
7851442-01	5069A
7851467-01	103A
7851650-01	161
7851651-01	161
7851652-01	159
7851654-01	109
7851655-01	109
7851657-01	116
7851947-01	109
7851949-01	123A
7851950-01	123A
7851952-01	123A
7851953-01	123A
7851954-01	159
7851955-01	131&155(CP)
7851956-01	128
7852223-01	109
7852223-01A	109
7852264-01	116
7852438-01	109
7852439-01	116(2)
7852452-01	199
7852454	123A
7852454-01	123A
7852455-01	123A
7852457-01	289
7852459-01	123A
7852460-01	175
7852577-01	166
7852775-01	102A
7852776-01	102A
7852778-01	102A
7852779-01	102A
7852781-01	123A
7852782-01	109
7852897-01	160
7852899-01	126
7852900-01	160
7852902-01	109
7852904-01	135A
7852907-01	116
7853090-01	132
7853091-01	229
7853092-01	123A
7853093-01	229
7853094-01	123A
7853098-01	109
7853099-01	166
7853351-01	102A
7853352-01	102A
7853354-01	102A
7853356-01	102A
7853357-01	109
7853358-01	116
7853463-01	123A
7853464-01	123A
7853465-01	123A
7855282	109
7855282-01	109
7855283-01	177
7855283-01(Ampex)	102A
7855284-01	116
7855291-01	123A
7855292-01	123A
7855293-01	123A
7855294-01	123A
7855295-01	131
7855296-01	102A
7855297-01	102A
7855298-01	152
7855352-01	109
7855357-01	109
7895987	788
7896108	983
7902310	128
7910070-01	102A
7910071-01	102A
7910072-01	121
7910073-01	184
7910076-01	116
7910108-01	161
7910111-01	5072A
7910112	1003
7910112-01	1003
7910122-01	1003
7910134-01	132
7910584-01	123A
7910585-01	123A
7910586-01	123A
7910587-01	123A
7910588-01	102A
7910589-01	102A
7910780-01	108
7910781-01	107
7910783-01	126
7910801-01	102A
7910803-01	158
7910804-01	123A
7910805-01	116
7910872-01	116
7910873-01	116
7913605	162
7914009-01	107
7914010-01	107
7914011-01	116
7914014-01	177
7932367	719
7932515	159
7932638	177
7932980	709
7935181	744
7936256	123A
7936331	123A
7937586	130
7937762	721
7938318	133
7939165	161
7939185	734
7939186	159
8000736	128
8000737	128
8002494B	5483
8002866	175
8004265	128
8010490	126
8010520	100
8010530	126
8014711	160
8014712	100
8015613	129
8020322	102A
8020324	102A
8020333	102A
8020334	102A
8020540	102A
8020560	102A
8021897	102A
8021898	102A
8022630	102A
8022631	102A
8023643	102A
8023892	102A
8024152	158
8024250	127
8024390	160
8024390(AIWA)	102A
8024400	102A
8031825	108
8031836	108
8031837	107
8031839	123A
8033690	123A
8033696	123A
8033720	123A
8033730	123A
8033803	108
8033804	108
8033943	108
8033944	123A
8034903	152
8036683	107
8037330	123A
8037332	123A
8037333	123A
8037343	128
8037353	123A
8037722	107
8037723	108
8051060	109
8052192	5071A
8052446	109
8110014	133
8111227	159
8111230	159
8112023	102A
8112027	102A
8112028	102A
8112071	102A
8112090	102A
8112143	131
8112146	102A
8112161	102A
8112162	102A
8113024	192
8113034	123A

To Be Replaced	ECG Replacement
8113051	123A
8113052	123A
8113060	123A
8113102	152
8113134	123A
8113323	199
8113327	199
8114024	192
8114031	123A
8114057	297
8115009	159
8120037	116
8120067	116
8120069	139A
8120126	519
8120133	116
8120164	601
8121002	109
8121014	109
8130014	177
8131010	177
8249600	161
8378759	128
8398315	128
8421133	128
8484771-1	5870
8484771-3	5872
8484771-7	5874
8484771-8	5875
8484771-10	5877
8505214-1	177
8505870-1	9910
8507465-1	726
8508309	129
8508331	784
8508331RB	903
8508403-1	784
8510671-1	160
8510671-2	160
8510671-4	160
8510694-1	130
8510744-1	101
8510747-4	126
8511632-5	519
8511724-3	176
8511724-4	176
8511759-1	160
8512001-2	101
8513070-1	519
8516861-1	102
8516986	102
8516986-1	102
8516986-2	102
8518237-1	5870
8518237-2	5872
8518237-3	5874
8518237-9	5873
8518237-10	5875
8518382-1	5980
8518382-2	5982
8518382-3	5986
8518382-9	5983
8518382-10	5987
8518383-10	5862
8518383P1	5940
8518383P2	5944
8518383P3	5944
8519510-2	506
8521502-1	101
8521502-2	101
8521502-4	101
8521587-1	116
8521587-101	5802
8521587-102	5804
8521692-1	5483
8522468-1	123A
8523209-1	519
8524402-1	101
8524402-4	101
8524440-2	102
8524457	128
8526849-1	100
8532787-2	519
8532787-3	519
8532787-4	519
8533519-1	519
8533588-1	908
8538640	160
8549020-1	519
8556188	108
8722248-2	199
8820359	1003
8821008	1217
8821081	1052
8821267	1160
8898302	744
8945077-12	102
8975103-2	101
8975158-1	102A
8981399-1	116
8981399-2	116
8989441-2	160
8989457-1	126
8992306	123A
9000630	181
9000940	159
9001225-02	910D
9001324	152
9001345-02	7493A
9001346	7411
9001349-02	7486
9001349-03	7486
9001549-02	7440
9001551-02	7404
9001551-03	7404

To Be Replaced	ECG Replacement
9001567	9157
9001567-02	9157
9001570-02	7403
9001630	123A
9001638	159
9001756	152
9001757	153
9002097-03	74107
9002159	123A
9003091-02	7410
9003091-03	7410
9003096-02	7450
9003096-03	7450
9003097-02	74107
9003148	9930
9003148-01	9930
9003148-02	9930
9003149	9946
9003149-02	9946
9003150	9962
9003150-02	9962
9003150-03	9962
9003151	7400
9003151-03	7400
9003152	7474
9003152-01	7474
9003234-04	7438
9003398-03	7408
9003398-04	7408
9003420-03	7496
9003445-03	7492
9003642-03	7430
9003911	9932
9003911-01	9932
9003911-03	9932
9004017-01	219
9004075-03	7401
9004076	7420
9004076-03	7420
9004076-04	7420
9004093-03	7473
9004300-03	7476
9004360-03	7454
9004508-01	159
9004896-04	7453
9004898-04	7411
9004915-04	912
9006527-01	219
9007038	159
9008964-01	123A
9100502	102A
9100621	102A
9100706	102A
9100944	102A
9101600	915
9176494	123A
9246053	116
9246055	116
9248015	116
9248055	116
9248058	116
9340311	130
9340311-D5514	130
9340388	159
9340426A	709
9340924	743
9341238	737
9341510	152
9341767	159
9341834	129
9341899	744
9342291	159
9342699	719
9343650	805
9347173	743
9524101	294
9739636-20	116
10000020	123A
10015595	123A
10017663	102
10022104-101	123A
10027973-101	107
10041264-101	519
10041265-101	177
10106058	123A
10112562	159
10112563	9900
10176209	9914
10180316	177
10180722	123A
10182330	159
10183001	199
10541284	9910
10541235	9931
10545502	123A
10545506	199
10641140	159
10644417	175
10644433	123A
10646032	130
10653086	175
10658276	9930
10658278	9936
10658279	9944
10658280	9945
10658281	9946
10658282	9951
10669652	519
10669666	159
10670399	159
10674068	5642
10676144	519
10713642	130
10805364	130
10814788	128

To Be Replaced	ECG Replacement
10849792	123A
10896074	123A
11018181	124
11019072	5526
11041003-1	181
11056225	290
11069934A	130
11076437	159
11083979	519
11103439	519
11116191	5547
11132875	102
11159860	519
11166527	130
11166535	128
11176377	177
11194628	181
11198132	123A
11210016/7825	109
11210024/7825	116
11220009/7825	102A
11220018/7611	102A
11220022/7611	102A
11220046/7825	123A
11220061/7825	158
11220076/7825	102A
11220106/7611	158
11233335	175
11242096	909
11253441	128
11253588	9912
11268821	519
11290111	177
11292312	74H00
11292313	74H40
11292314	74H51
11292315	74H54
11322253	128
11369564	74H05
11667821	102
11706998-2	199
11707240	311
11707240B	311
11707240RA	311
11718319	128
11728100	941
11729469	716
11783453	102
11787173	519
11790334	5529
11800182	102
11802400	123A
11802500	123A
11803000	177
11858909	102
12023074	310
12090924-4	102A
12233800	289
12363800	175
12901503	159
12947206	519
12965471	123A
12994851	123A
12997748	519
13020000	102A
13020002	102A
13030189	177
13030192	116
13030256	125
13030266	177
13030274	177
13030285	5016A
13030301	109
13030312	109
13030313	116
13030401	143A
13033801	116
13035807-1	123A
13037215	123A
13038115	107
13038900	116
13040089	103A
13040095	102A
13040096	103A
13040216	123A
13040229	109
13040236	102A
13040304	108
13040313	123A
13040317	123A
13040318	123A
13040347	102A&103A(CP)
13040349	131
13040352	102A
13040357	123A
13040362	108
13040421	108
13040429	129
13040456	158
13040459	108
13050221	116(2)
13073525	289
13083908	123A
13094517	199
13104367	130
13104560	128
13104561	129
13158621	467
13214051	5995
13217724	102
13217732	102
13443767	102
13447321	102
14001376-01	5697
14001376-02	5697

To Be Replaced	ECG Replacement
14001376-03	5697
14317184	181
14500001-001	9946
14500001-002	9949
14500001-003	9963
14500001-004	9961
14500004-001D	9936
14500004-001P	9936
14500004-002	9937
14500004-003	9935
14500005-001	9944
14500016-001	941D
14500016-002	941M
14500022-001	123
14628601	124
14714661	519
14714703	519
14714729	5995
14714760	123A
14714786	123A
14734248	909
14735521	154
14736221	159
14769302	505
14798029	159
15038433	123A
15039456	123A
15039464	123A
15039472	519
15039480	519
15059850	124
15077183	175
15102718	102
15105300	309K
15109200	74S04
15348931	175
16233010	1006
16270092	123A
16270175	519
16271033	9936
16271041	9936
16353343	736
16520001-1	123A
16658600	519
16763333-001	909
16797300	123A
16797301	123A
16906600-01	159
17101881	109
17101882	110
17184600	7405
17200000	177
17200240	177
17210010	116
17210430	614
17240010	156
17771400	128
17809000	130
17854700	519
17942800-01	159
17942800-801	159
18151417	128
18179900	123A
18341300	519
18458117	941
18525200	126
19020065	152
19020095	130
19080002	116
19166123	9961
19901403	128
19901503	159
19901606	229
19901607	229
19901806	108
19901807	108
20001786-134	109
20001786-139	114
20001786-141	116
20001786-142	116
20025153-77	123A
20030703-0701	123A
20030703-0702	159
20052600	123A
20088308	199
20115070	109
20130109	125
20278600	130
20912578-1	176
20918596-2	121
22114210	192
22114225	186
22114253	159
22114254	187
22115181	109
22115182	109
22115183	116
22115192	109
22115405	116
22130009	128
22692012	177
22692017	601
22901513	108
22902046	108
23109992	138A
23111006	121
23114001	108
23114004	127
23114007	154
23114009	127
23114011	121
23114015	289
23114015(Hor Osc)	289
23114017	289
23114021	102A

To Be Replaced	ECG Replacement
23114023	108
23114026	127
23114028	154
23114031	108
23114033	121
23114034	108
23114036	108
23114037	161
23114038	286
23114043	108
23114044	233
23114045	103A
23114046	123A
23114050	159
23114051	159
23114052	154
23114053	154
23114054	154
23114056	108
23114057	108
23114058	128
23114060	108
23114061	102A
23114070	130
23114070A	130
23114074	506
23114078	233
23114081	290
23114082	108
23114084	175
23114086	175
23114088	175
23114095	154
23114097	127
23114100	130
23114104	233
23114108	130
23114109	108
23114118	123A
23114119	123A
23114124	159
23114125	154
23114126	107
23114127	108
23114131	185
23114132	184
23114133	185
23114134	184
23114136	159
23114137	290
23114138	159
23114155	123A
23114157	107
23114163	319
23114164	161
23114165	107
23114171	108
23114172	108
23114180	108
23114181	108
23114195	128
23114200	124
23114208	162
23114211	102A
23114212	123A
23114214	123A
23114216	199
23114217	199
23114220	175
23114221	175
23114232	128
23114238	108
23114248	198
23114249	171
23114250	171
23114251	171
23114253	152
23114254	152
23114255	123A
23114258	199
23114259	289
23114260	289
23114261	289
23114262	290
23114266	198
23114268	124
23114275	123A
23114276	123A
23114277	124
23114280	229
23114282	229
23114293	290
23114296	123A
23114297	289
23114300	159
23114301	159
23114302	159
23114313	193
23114314	192
23114315	124
23114317	162
23114321	165
23114323	238
23114325	159
23114336	198
23114343	165
23114344	198
23114347	289
23114349	199
23114550	159
23114900	198
23114915	297
23114919	162
23114923	196
23114939	197

To Be Replaced	ECG Replacement
23114941	198
23114944	162
23114945	238
23114954	198
23114955	291
23114961	175
23114962	238
23114966	229
23114969	196
23114974	198
23114975	198
23114982	198
23114983	190
23114992	292
23114993	198
23114994	192
23114995	193
23114999	198
23115012	125
23115016	174
23115019	116(2)
23115022	118
23115042	116
23115046	116
23115049	177
23115050	177
23115051	507
23115052	116(3)
23115057	123A
23115058	123A
23115064	177
23115065	178MP
23115068	177
23115070	109
23115071	177
23115072	177
23115074	178MP
23115076	139A
23115078	115
23115079	113
23115080	177
23115085	116
23115088	109
23115094	506
23115098	125
23115108	177
23115109	177
23115113	112
23115115	109
23115117	125
23115118	125
23115120(Diode)	177
23115120(Rectifier)	125
23115121	112
23115129	109
23115130	125
23115131	506
23115140	116
23115142	116
23115145	506
23115146	506
23115157	502
23115168	137A
23115185	116
23115192	506
23115194	177
23115199	116
23115215	504
23115249	177
23115250	116
23115263	116
23115273	116
23115277	5072A
23115285	177
23115285(AFC)	178MP
23115292	5081A
23115294	116
23115296	125
23115298	506
23115300	116
23115321	513
23115328	5081A
23115331	177
23115334	513
23115337	116
23115338	506
23115368	5074A
23115374	5072A
23115377	506
23115455	5116A
23115897	177
23115903	6402
23115908	5071A
23115912	506
23115913	506
23115914	506
23115918	5081A
23115919	142A
23115921	5116A
23115938	504
23115947	125
23115955	137A
23115960	506
23115965	525
23115966	125
23115978	177
23115981	506
23115984	138A
23115990	5084A
23115994	125
23115999	506
23119003	711
23119004	710
23119005	711
23119007	710

To Be Replaced	ECG Replacement
23119011	1101
23119012	1004
23119013	1109
23119014	747
23119016	1105
23119017	1062
23119019	749
23119022	1101
23119023	1109
23119025	748
23119028	1105
23119030	1109
23119031	1109
23119032	1109
23119033	1109
23119039	1129
23119960	7493A
23119961	1135
23119966	1196
23119971	1200
23119978	1236
23119981	1128
23119988	1133
23119989	1134
23119990	1128
23119993	1130
23119994	1132
23119995	1131
23119999	748
23124037	108
23126183	161
23126289	107
23126290	107
23126291	107
23126577	112
23126620	108
23200596-1	128
23311006	104
23311066	121
23576100	1083
23908982	138A
24501000	123A
24539800	159
24551302	128
24553500	519
24553501	519
24553600	123A
24561601-E	5995
24561602-E	5995
24561603	5995
24561604-E	5995
24562000	123A
24562001	123A
24562100	123
24562101	123A
24562200	123A
24562300	159
24733362	129
25114101	102A
25114102	102A
25114103	102A
25114104	102A
25114116	123A
25114121	123A
25114130	154
25114143	124
25114161	108
25115102	109
25115108	116
25115115	116
25175800	519
26004001	123A
26004301	159
26004961	159
26005121	159
26006820	177
26006910	177
26008020	177
26010006	132
26010010	195A
26010011	507
26010016	159
26010020	123A
26010021	289
26010022	237
26010023	199
26010024	152
26010026	229
26010027	290
26010028	177
26010029	137A
26010030	177
26010032	177
26010033	116
26010035	1102
26010041	297
26010044	5072A
26010046	137A
26010047	177
26010051	229
26010052	297
26010053	236
26010056	108
26010057	177
26010058	195A
26010059	152
26010062	611
26011310	159
26316032	159
26501505	123
27113100	116
27119004	710
27123050	116
27123070	116
27123100	116

To Be Replaced	ECG Replacement
27123100A	116
27123120	116
27123150	109
27123220	116
27123240	109
27123270	109
27123290	116(2)
27125080	123A
27125090	123A
27125110	102A
27125120	102A
27125140	123A
27125150	120A
27125160	123A
27125170	158
27125210	108
27125230	126
27125240	100
27125250	123A
27125260	102A
27125270	123A
27125300	123A
27125310	103A
27125330	102A
27125340	102A
27125350	102A
27125360	102A
27125370	123A
27125380	123A
27125460	123A
27125470	123A
27125480	158
27125490	103A
27125500	123A
27125540	176
27125550	102A
27126060	131&151
27126090	121
27126100	130
27126130	121
27126130-12	121
27126130(Transistor)	121
27126220	108
28100812-001	177
28101149	234
28102128-002	199
28102128-004	199
28102163-001	177
28105203-001	152
28105203-002	152
28105207-001	234
28105249-001	153
28105789-001	199
29004423	947
30000010	126
30000021	102A
30200033	152
30200053	123A
30200061	223
30200062	233
30200091	108
30200101	130
30400021	132
30600010	109
30600020	109
30600040	116
30600140	142A
30677435-001	909
30682592-001	234
31210049-00	160
31210077-44	160
31210240-33	160
31210240-44	160
31210471-11	160
31210506-11	160
31210506-22	160
31220054-00	102A
32510001	116
32600025-01-08A	123A
34002412	903
34002412-3	903
34621786-1	519
35024712	197
35050411	198
35050412	198
35062712	198
35393060-01	123A
35393060-02	123A
35393060-03	123A
36001200	128
36171000	106
36171100	123A
36186200	9157
36188000	7475
36188700	74H00
36771100	124
37000918	109
37001003	1047
37001009	712
37001011	712
37002001	1046
37003001	1089*
37004001	1048
37006001	1077
37007001	1076
37008002	1091*
37009006	1086
37246602	177
37246711	177
37275350	177
37568200	506
37568250	506
37568800	116
37582000	506
38970300	123A

To Be Replaced	ECG Replacement
39126500	941
40306312	748
40306400	749
40306604	1109
40760211-002	5695
40760211-P2	5695
41013566	116
41020618	116
41020687	156
41021007	116
41023224	116
41023225	116
41025773	125
41025849	116
41027063	116
41027612	109
41027613	109
41027991	125
41027992	109
41029009	109
41029290	109
41029498	5084A
41029499	116
41030618	156
41520419	116
41522875	110MP
41527380	109
41622859	177
41624836	109
42020200	140A
42020414	140A
42020737	140A
42023425	143A
42024925	5071A
42027065	5188A
42027092	5075A
42029566	143A
43020418	121MP
43020731	128
43021017	123A
43021067	107
43021083	123A
43021168	129
43021198	128
43021415	128
43022055	160
43022134	132
43022458	159
43022577	121
43022860	107
43022861	123A
43023190	181
43023212	123A
43023221	123A
43023222	129
43023223	128
43023843	130
43023844	123A
43023845	159
43024216	130
43024218	184
43024219	185
43024225	133
43024306	190
3024833	126
43024834	126
43024859	199
43024873	199
43024879	128
43024880	129
43024972	123A
43025055	123A
43025056	123A
43025059	123A
43025538	199
43025539	192
43025620	160
43025972	123A
43026284	128
43026285	129
43027213	152
43027214	152
43027379	123A
43027571	186
43027614	108
43027615	108
43027616	108
43027617	108
43027618	107
43027619	106
43027620	123A
43027987	152
43029471	233
43029472	233
43029483	199
43029484	297
43029485	298
43029486	300
43040313	128
43122874	726
43126551	722
43126551-A	722
43200103	109
43300203	109
43540012	116
43600101	116
44007301	108
44008401	108
44011001	123A
44079004	199
44089001	107
44090004	123A
44211001	158
46156741P1	941
46156741P2	941D

To Be Replaced	ECG Replacement
48134666	123A
48134842	123A
48137195A	159
48869715	181
50210104	123A
50210300-00	123A
50210300-00 VF	123A
50210300-01	123A
50210300-01 VF	123A
50210300-11	123A
50210310-10	123A
50210310-10 VF	123A
50210310-11	123A
50210400-00	159
50210400-00 VF	159
50210400-01	159
50210400-01 VF	159
50210510	123A
50210600-00 VF	159
50210600-01	159
50210600-01 VF	159
50210600-03	159
50210610-10	159
50210610-13	159
50210700-00	199
50210700-00 VF	199
50210700-01 VF	199
50210700-10	199
50210710-10 VF	199
50210800-00	123A
50210800-01	123A
50210800-01 VF	123A
50210800-02	123A
50210800-02 VF	123A
50210800-10	128
50210800-11	123A
50211210	159
50211300-00	106
50211300-00 VF	106
50211300-01	106
50211300-10	106
50211400-00	234
50211400-01	234
50211410-10	234
50211410-11	234
50211500	159
50211500-01	159
50211500-01 VF	159
50211510-10	159
50211510-10 VF	159
50211510-11	159
50211600-00	106
50211600-00 VF	106
50211600-01	106
50211600-02	106
50211600-02 VF	106
50211600-10	106
50211600-12	106
50211610-10	106
50211610-12	106
50211900	128
50212100	159
50220601	175
50220602	175
50221300-01	130
50221400-01	218
50221800	152
50221800-01	152
50251300	941
50254200	7406
50254400	915
50254600	74S00
50254700	74S10
50254900	74S20
50255000	74S113
50613800	923
51003059	123A
51003092	123A
51003108	159
51010422A02	718
51122245	123A
51122870	128
51122880	128
51126540	175
51126850	130
51161325	159
51310000	9932
51310001	9933
51310002	9936
51310003	9944
51310004	9946
51310005	9948
51310006	9962
51310007	9094
51320000	7400
51320001	7402
51320002	7404
51320003	7410
51320004	7420
51320005	7440
51320006	74170
51320008	7472
51320009	7403
51320010	7426
51320011	7430
51320012	7400
51320016	7451
51320017	7405
51320018	7486
51330005	7408
51565600 VF	123A
51577500	9930
51577600	9932
51577700	9933
51577800	9944

To Be Replaced	ECG Replacement
51577900	9946
51578000	9948
51578100	9962
51581300	123A
51624200	9944
51631000	519
51715100	910D
51717000	9094
51717100	9097
51753300	910
52335500	7495
52335600	74H04
52335600HL	74H04
52335700	74H20
52335800	74H50
52335800HL	74H50
52335900	74H74
52335900HL	74H74
53015201	156
54967774-P5	102
55310007-115	139A
55330007-001	507
55335005-001	5870
55430001-001	159
55430028-001	218
55440007-001	123
55440011-001	108
55440023-001	108
55440043-001	123
55440048-001	123A
55440063-001	128
55440087-001	130
55440091-001	130
55440111-001	107
55460014-001	132
55517007	159
56301500	123A
56301600	159
57000901-504	123A
57276605	105
57279005	105
57279007	105
57279009	105
57279011	105
57279017	105
57279025	105
57279027	105
57279033	105
57279073	105
57279076	105
57279293	105
57279298	105
57279566	105
57279793	105
57280281	105
57282315	105
57288072	105
57288073	105
57288076	105
57288079	105
57299720	105
59700278	123A
61260039	126
61260039A	126
62009616	109
62013559	102A
62018526	102A
62020911	5804
62034076	160
62034297	112
62034327	102A
62041528	102A
62041536	102A
62042575	126
62042583	123
62042591	102A
62042648	160
62042656	160
62042664	102A
62043679	160
62043695	160
62044888	126
62045035	310
62045280	5012A
62045531	102A
62045612	5018A
62045930	102A
62046287	131
62046406	160
62046414	160
62046422	160
62047119	116
62047259	120
62047364	126
62047895	125
62048158	108
62049200	102A
62049219	102A
62049626	126
62049774	126
62050217	101
62051302	506
62051310	506
62051450	127
62051493	154
62051509	104
62052570	102
62052791	116
62052821	126
62052848	126
62054212	121MP
62054298	128
62054336	102
62057957	102A
62078502	102

To Be Replaced	ECG Replacement
62081579	121
62084103	121
62084200	121MP
62084936	121
62084960	123A
62085053	116
62087025	126
62087447	116
62087498	102A
62087595	105
62087609	103A
62087617	101
62087633	121
62087641	160
62087668	160(2)
62087684	100
62088502	102
62094613	109
62103264	116
62103272	116
62104678	108
62104759	128
62105038	107
62105143	113
62105275	123A
62105291	107
62111607	126
62113480	102A
62114258	158
62116331	154
62118946	102A
62118970	102
62119292	100
62119500	126
62119551	109
62119578	103A
62123648	126
62123672	5014A
62123788	126
62134143	102A
62134496	109
62134941	109
62135182	160
62135301	102A
62139455	112
62139633	160
62139668	160
62140844	116
62140887	126
62140895	126
62140933	126
62141042	127
62154543	110
62166916	145A
62208945	128
62208953	129
62236302	123A
62256877	116
62256885	172A
62256893	159
62258942	5019A
62260408	123
62278566	129
62279664	159
62360755	116
62371566	121
62372540	124
62379995	123A
62380004	160
62380020	102
62381620	110
62383976	703A
62389478	185
62389486	184
62389494	128
62389699	123A
62389702	159
62390174	142A
62393661	153
62393688	152
62393696	129
62438096	159
62468211	177
62488131	5809
62506288	159
62506296	108
62506318	108
62506334	123A
62506350	233
62506377	123A
62522666	136A
62522674	116
62522682	113
62522704	120
62522712	506
62522720	177
62522739	116
62530898	126
62530915	128
62537124	108
62537140	123A
62539283	123A
62539291	159
62539305	108
62539313	106
62539321	108
62539348	161
62540311	5081A
62541555	108
62543299	109
62543892	108
62543906	108
62543914	154
62562226	116
62562625	506

To Be Replaced	ECG Replacement
62563265	159
62563273	199
62563281	199
62563303	108
62563309	154
62563311	159
62563346	108
62563354	108
62563362	123A
62563370	124
62564490	5071A
62564504	142A
62564520	506
62564539	177
62565122	108
62565160	161
62565963	159
62566369	159
62573741	130MP
62590661	159
62593660	129
62593687	123A
62593707	123A
62593717	161
62593725	161
62593733	160
62596023	160
62596279	123A
62604727	123A
62605465	108
62605618	118
62608498	159
62608528	132
62614765	160
62618663	123A
62636696	161
62638214	123A
62638222	191
62638230	123A
62638249	199
62638257	129
62638265	128
62638281	123A
62638303	123A
62638311	123A
62638338	5080A
62638346	113
62652381	123A
62669462	5079A
62674954	712
62674962	714
62674970	715
62674989	790
62674997	147A
62675004	123A
62675012	123A
62691263	123A
62691271	108
62691298	128
62695595	108
62695919	107
62695927	107
62695943	108
62697571	177
62700122	102(2)
62707666	160
62711205	193
62711728	102A
62711914	123A
62713747	108
62713755	102
62714832	160
62723645	160
62727128	192
62727772	116
62728574	103
62728590	160(2)
62728604	124
62733942	123A
62734450	153
62734469	712
62734596	196
62734604	163A
62734612	124
62734639	154
62734647	192
62734655	233
62734663	193
62734671	152
62734728	506
62736283	749
62736291	790
62736305	783
62736976	121
62737395	171
62737409	123A
62737417	124
62737425	130
62737433	159
62737441	165
62737468	159
62737476	123A
62737484	123A
62737492	123A
62737522	154
62737646	124
62737654	748
62741406	177
62741422	177
62741449	165
62741457	159
62741465	199
62742585	104
62743182	152
62743794	153

To Be Replaced	ECG Replacement
62744081	199
62744162	116
62746483	145A
62746491	149A
62747501	504
62748273	161
62748281	199
62748451	171
62749067	116
62749558	116
62752300	131
62752319	100
62752327	100
62752742	159
62759720	159
62760087	116
62761261	109
62761288	5098A
62761296	5079A
62761318	506
62761326	506
62761334	116
62761350	177
62761377	177
62766212	184
62766220	123A
62766239	108
62766247	159
62766255	199
62766263	199
62766271	159
62766603	160
62771208	171
62771210	289
62771224	290
62771232	5404
62771240	161
62771364	100
62784822	109
62785225	123A
62786272	188
62789204	165
62789247	161
62789255	161
62789263	108
62793163	123A
62798564	107
62801328	506
62806060	159
62887676	102A
62921967	142A
63000061	358
65372000	128
65600500	9930
65600600	9932
65600700	9946
65600800	9093
65600900	9099
65611000	9094
65611100	9097
67283700	128
70260450	107
70260540	139A
70270050	116
70270250	177
70270390	116
70270490	5401
70270500	5444
70270720	116
70270730	1054
70270740	1095
70270770	1151
70370050	116
71773660	110
72035900	159
72045600	9110
72729031	105
73010780	5072A
74140226-001	130
74140226-002	130
74140226-003	130
75857322	123A
76276722	116
79391858	736
80000900	358
80001300	116
80001400	116
80002400	116
80050100	123A
80050300	103A
80050400	160
80050500	126
80050600	129
80050700	121
80051001	130
80051500	123A
80051600	129
80052101	199
80052102	123A
80052201	128
80052202	123A
80052301	128
80052302	123A
80052402	130
80052600	123A
80052700	129
80052800	103A
80053001	123A
80053300	152
80053400	123A
80053501	132
80053600	108
80053702	130MP
80104900	126
80105200	126

@, * — See special notes on inside back cover.

To Be Replaced	ECG Replacement
80105300	126
80146620	160
80146630	160
80203350	102A
80205400	102A
80205600	102A
80222631U	102A
80226310	102A
80236400	102A
80236430	158
80243900	102A
80285400	176
80318250	123A
80337390	128
80338030	108
80338040	108
80339430	108
80339440	108
80366830	107
80366840	107
80383840	123A
80383930	123A
80383940	123A
80389910	123A
80414120	130
80414130	130
80421980	128
80510600	109
80521881	109
81073304	290
82073206	199
82409501	123A
82410300	129
83037204	123A
83038004	229
83073205	123A
83073206	123A
83073304	123A
83073305	123A
83073306	199
83073504	123A
83078402	229
83093005	107
83094502	123A
83167403	229
83167405	229
83167503	229
83167505	229
84026103	192
84667800	909
86401000	123A
87096010	116
87100600	109
87100605	109
87140020	116
87201881	109
87204260	109
87219410	116
87227880	177
87227881	177
87302650	177
87400020	116
87500620	110
87500720	116
87500920	139A
87600920	139A
87996010	614
87996440	177
87996467	177
88125010-9	123A
89941008	128
89942601	123A
89942702	229
89946008	129
89960404	229
89962306	123A
89962307	123A
89962308	123A
89962309	123A
89962404	123A
89963008	123A
89963009	123A
90042702	229
90200090	1006
90200100	1140
90270020	5483
90270060	116
91011500	909
91011900	923
91013300	941D
91013600	940
91014400	949
91015300	947
91056140	159
91190032	116
92005600	102A
92064001	541
92115000-23	177
93037230	123A
93037240	123A
93063240	123A
93063270	123A
93063280	123A
93063470	123A
93064440	199
93064450	123A
93073260	199
93073350	128
93073440	154
93073540	123A
93078420	107
93082830	123A
93082840	123A
93082920	107
93094502	123A

To Be Replaced	ECG Replacement
93097120	128
93938040	123A
93939440	107
94029220	124
94650700-00	159
94650700-01	159
94742308	128
94810300	5547
94813000	181
94818400	223
94824100-00 PS203	123A
94824100-01 PS203	123A
94824101	123A
94825000-05	9093
94825000-11	9936
94846400-00	5695
94846400-01	5695
94846400-02	5695
94913000-01	941D
95114101-00	102A
95114102-00	102A
95114109-00	102A
95114135-00	102A
95114140-00	121
95115115-00	125
95349700	197
95522800	128
95524600	124
96421866	125
110654492-001	177
120001190	160
120001192	100
120001195	102A
120001300	116
120002013	102A
120002014	102A
120002213	160
120002214	160
120002216	160
120002513	160
120002515	160
120002518	160
120002520	160
120002521	102A
120002656	160
120002748	102A
120004492	160
120004493	102A
120004494	102A
120004495	102A
120004496	108
120004497	108
120004880	108
120004881	108
120004882	108
120004883	123A
120004884	195A
120004885	224
120004886	224
120004887	121
131000561	128
131000562	121
131001007	130
131005353-1	197
131005807	128
131005808	129
134804204-101	116
134804290-101	121
134804596-301	116
147187606	177
152221011	102A
152221483	160
163547338	723
216415001	1115A
226021014	108
229005013	123A
229005014	123A
229005015	123A
229018032	108
229018033	108
229018034	108
229020423	108
229021014	108
229025010	108
229510015V	108
229510031V	108
229510032V	108
229510033V	108
231150050	109
238208001	175
260100602	611
261002302	910D
261004303	941M
261015401	923
312104732	160
312104733	160
314743006	175
346190001	128
402003173	117
415200050	1027
420208700	125
430203845	129
430233843	152
436004601	199
436005001	123A
436005901	234
436006101	128
436006201	129
436006401	199
440008401	116
440009905	519
450010201	108
450010701	161
450015100	278
485134922	123A

To Be Replaced	ECG Replacement
485134923	123A
485134924	123A
485134925	123A
485134926	123A
485134956	160
485134997	199
485137002	128
485137370	197
570004503	123A
570005452	123A
570005503	123A
600000060	109
600000090	109
600000150	177
600000953	177
601000001	116
601000062	5013A
601000090	139A
601000091	139A
602000001	116
603000002	614
632037210	123A
632037218	123A
632037300	199
632037318	186A
632039418	229
632073318	199
632073510	289
632109612	199
632122617	186A
632130619	235
632195719	295
632197406	235
633056439	290
661000001	601
881250108	123A
881250109	123A
885540026-3	7420
885540031-2	74H21
910678870	159
1348042041	116
1348042901	121
1348045963	116
1500149001	109
1500169001	109
1510289001	519
1510409003	116
1510679001	177
1510799001	156
1520579001	5075A
1520759001	138A
1520889001	135A
1520899001	139A
1520909001	138A
1520939001	139A
1522210111	102A
1522210131	126
1522210300	102A
1522210921	126
1522211021	126
1522211200	102A
1522211221	102A
1522211328	102A
1522211921	160
1522214400	160
1522214411	126
1522214435	126
1522214821	126
1522214831	160
1522216500	102A
1522216600	126
1522217400	160
1522223720	123A
1522270100	109
1522270101	109
1523270105	116
1540049001	613
1611819064	123A
1679003608	1003
1720249001	165
1720389001	295
1720389002	235
1720449001	152
1760089001	123A
1760489002	289
1760609002	229
1760609004	123AP
1760629001	199
1760659001	229
1760749001	229
1760819002	107
1770209001	294
1820379001	312
1820559001	312
2002010061	7493A
2002010072	7473
2002100022	1004
2002110206	712
2002110269	712
2002120012	749
2002120022	1004
2002120033	1080
2002500711	715
2002500812	714
2002500914	790
2002501006	714
2002501300	791
2002501708	1196
2002800034	941M
2003037227	123A
2003037309	199
2003038092	107
2003038208	319
2003038812	233
2003039227	123A

To Be Replaced	ECG Replacement
2003049614	295
2003051513	124
2003053527	229
2003055813	163A
2003064314	238
2003073309	199
2003073517	289
2003082823	199
2003082837	199
2003082840	199
2003082899	199
2003087227	123A
2003102529	175
2003110607	162
2003117004	238
2003117044	238
2003121216	184
2003134427	199
2003144746	198
2003144795	198
2003145404	162
2003150702	198
2003150710	198
2003162538	198
2003162700	128
2003172208	198
2003172216	198
2003172305	198
2003173009	316
2003174006	123AP
2003185506	108
2003189025	123A
2003189039	194
2003189074	159
2003189109	165
2003189304	165
2003206800	198
2004047310	153
2004049081	153
2004049514	159
2004050917	290
2004056215	290
2004060858	159
2004060864	159
2004067350	290
2004073517	289
2004074304	185
2004082606	159
2004082614	159
2004084428	129
2004085415	234
2004085422	234
2004302210	158
2004305600	102A
2004305618	102A
2004341519	158
2004356122	159
2004356220	288
2004356801	292
2004502439	124
2004503018	103A
2004546826	287
2004547806	291
2004556826	287
2004700116	233
2007110000	222
2007110109	222
2007200000	6402
2008000001	109
2008000019	110
2008000026	109
2008000064	109
2008000075	174
2008010028	177
2008010094	177
2008010102	601
2008010110	177
2008010127	177
2008010131	177
2008100027	116
2008100076	506
2008100093	125
2008100130	116
2008130040	506
2008130084	116
2008130171	506
2008230039	135A
2008230042	5070A
2008230057	5071A
2008300017	612
2008310019	612
2008310058	612
2008600028	112
2009020019	116(3)
2009120059	125
2009120101	116
2009120158	116
2009120187	116
2009130017	125
2009130075	125
2009700063	503
2012000092	109
2012000100	109
2012000118	109
2012010127	519
2012010159	177
2012010165	177
2012100119	525
2012100126	116
2012130234	506
2012230042	5070A
2012230109	142A
2012230312	142A
2013120208	116
2013130109	125

To Be Replaced	ECG Replacement
2290180119	108
2295100224	108
2295100225	108
2295100226	108
2295100227	160
2295100228	108
2295100232	117
2295100233	125
2295100234	117
2295100235	117
2791012150	123
2791012153	102
3071339004	1192
3121004900	160
3121007744	160
3121024033	160
3121024044	160
3121047111	160
3121050611	160
3121050622	160
3122005400	102A
3520743010	159
3539306001	123A
3539306002	123A
3539306003	123A
4020427909	613
4100008444	129
4100204603	233
4100204613	229
4100204643	233
4100205352	229
4100208283	229
4100208292	229
4100208293	229
4100209005	199
4100209452	199
4100213422	229
4100217172	289
4100400553	312
4102100220	102A
4104007193	290
4104007380	185
4104103242	158
4104204602	107
4104204603	107
4104204612	107
4104204613	229
4104206440	123A
4104206442	199
4104208282	199
4104208283	199
4104213173	289
4108296047	108
4108296237	123A
4108296238	123A
4108296255	229
4108296257	229
4109208284	123A
4109213174	289
4109213354	199
4120120760	177
4120129000	109
4120420760	519
4120427909	613
4120501200	142A
4121200051	5069A
4129100000	177
4129100600	109
4129100602	110
4129104002	116
4129200602	110
4129501200	142A
4130100502	156
4130104002	116
4139104002	116
4150002031	1054
4152000150	1027
4152032010	1179
4154011370	788
4154011510	1237
4154011560	801
4157013102	801
4159761157	801
4202003173	116
4202003200	156
4202003500	109
4202003700	506
4202003900	506
4202005000	113
4202005600	110
4202006100	177
4202006200	177
4202006500	116
4202006700	506
4202006800	116
4202007600	116
4202007601	506
4202007700	506
4202007800	125
4202007801	506
4202007802	116
4202007900	113
4202008000	116
4202008500	116
4202008600	109
4202008700	125
4202009200	5077A
4202009400	119
4202010100	177
4202011200	5074A
4202011300	5071A
4202011400	5071A
4202011500	5074A
4202011900	5077A
4202012000	5077A

To Be Replaced	ECG Replacement
4202012501	5074A
4202012700	145A
4202012800	5077A
4202013300	5085A
4202013600	519
4202014400	506
4202014500	116
4202014600	506
4202015100	506
4202015600	177
4202016200	177
4202017200	125
4202017600	116
4202018500	116
4202018700	177
4202019400	5143A
4202019500	5085A
4202020100	5070A
4202020300	125
4202020500	506
4202020900	506
4202021000	116
4202021100	156
4202021700	137A
4202021900	177
4202022300	506
4202022500	177
4202022700	177
4202022900	525
4202023000	506
4202023100	116
4202023400	116
4202024200	138A
4202093599	110
4202104170	167
4202104470	125
4202104570	506
4202104770	102A
4202104870	506
4202105070	174
4202105470	138A
4202106270	505
4202106970	506
4202107370	503
4202107470	177
4202107570	504
4202107670	177
4202107970	506
4202108070	505
4202108170	505
4202108270	116
4202108570	5080A
4202109070	5074A
4202109170	177
4202109370	116
4202110270	506
4202110470	506
4202110870	5074A
4202114970	506
4202115770	506
4202115990	116
4202116670	5074A
4202970330	145A
4203008000	506
4203970100	199
4203970101	199
4206002300	1004
4206002400	1004
4206002600	1080
4206002900	1080
4206003900	1080
4206004000	712
4206004200	1094
4206004300	1121
4206004400	1004
4206004600	712
4206004700	1122
4206004800	1122
4206004900	1122
4206005200	1159
4206007200	1094
4206007300	1121
4206007500	1158
4206009100	1183
4206009200	738
4206009700	738
4206009800	1178
4206104970	712
4206105170	749
4206105370	1109
4206105470	712
4206105470(IC)	712
4206105770	712
4206105870	712
4360021001	123A
4803101109-02	121
5147013102	801
5700045452	123
6611000900	506
6611001000	506
6611001100	506
6611001200	506
6611001500	506
6611001700	116
6611001800	116
6611002300	506
6611003000	502
6611003200	177
6611007300	116
6612004000	109
6612006000	177
6612009000	109
6613002200	506
6615005000	5018A
6621001000	289

To Be Replaced	ECG Replacement
6621001100	124
6621001800	198
6621001900	198
6621002000	286
6621002300	162
6621002400	238
6621002800	291
6621003100	123A
6621003200	123A
6621003400	123A
6621003500	289
6621004000	319
6621005000	233
6621006200	287
6621007200	152
6621008100	289
6621009100	233
6622000100	128
6623001100	159
6623001900	290
6623002000	159
6623002100	159
6623002200	159
6623002300	290
6624001100	129
6624002000	159
6624003100	153
6624003200	289
6644000100	712
6644001100	1128
6644001400	1134
6644001500	1133
6644001700	1131
6644001800	1132
6644002100	1129
8001100001	519
8001100003	519
8001100005	177
8001200001	123A
8001200004	128
8905313017	109
8905405819	116
8905405822	519
8905421277	139A
8905706076	107
8905706077	107
8905706080	107
8905706137	159
8905706165	106
8905706894	222
8905707314	199
8905707317B	199
8905707327	159
8905707338	298
8905707416	199
8905713124	152 & 153
8905955029	801
9511410100	102A
9511410200	102A
9511410900	102A
9511413500	102A
9511414000	131
9511510200	109
9511511500	125
13480084523	117
13480084555	117
13480085512	5190AK
13480085513	5209AK
13488240306	116
13488240307	519
13488240308	116
13488240309	177
13488240310	506
13488240311	519
13488240312	506
13488240313	177
13488240314	519
13488240315	177
13488240316	519
13488240317	519
13488240318	519
16000190201	126
16009090545	193
16100190668	108
16102190693	123A
16102190929	108
16102190930	123A
16102190931	186
16103190668	108
16103190930	107
16104191168	123A
16104191225	108
16104191226	108
16105190536	123A
16105191229	128
16106190537	123A
16108190536	199
16108290536	128
16109190536	199
16109209536	123A
16112190710	107
16116190634	123A
16147191229	123A
16156197229	128
16171190693	123A
16171190858	123A
16171191368	123A
16172190693	123A
16172190858	123A
16201190022	102A
16201190187	158
16204190457	158
16207190405	158
16211190022	158
16212190022	158

To Be Replaced	ECG Replacement
16256197228	129
16304190031	302
16304191350	199
16304191600	123A
16304197001	123A
16304198000	195A
16304199400	182
16307190632	123A
16343190142	186
16356179229	128
16377190632	123A
16400690060	109
16401190188	109
16405990022	177
16411190188	109
16411992473	519
16415490000	109
16419990032	109
16461992473	177
16501090016	116
16501190016	116
16505090005	116
16515991002	116
16516390010	117
16602990107	5071A
16602995856	140A
16629291210	116
16740135809	1024
20252300017	116
20252300018	116
44202007800	506
57000901504	123A
62170835330	177
89054211851	177
134800847274	109
134800849022	177
134800854093	177
134800855216	109
134800855677	5213A
134800863030	109
134800863350	5187AK
134800864205	5190A
134800865539	110MP
134800867716	109
134800868504	5206A
134800868825	5187A
134800868907	5226A
134800869525	123A
134804204101	116
134804290101	121
134804596301	116
134882095301	116
134882095302	116
134882095303	116
134882095304	116
134882137801	5192A
134882137802	5200A
134882137803	5232A
134882137804	5174AK
134882137805	5175AK
134882137806	5188A
134882137807	5224A
134882137808	5186A
134882137809	5229A
134882139701	109
134882139702	109
134882178101	109
134882178102	109
134882178103	109
134882178104	109
134882178105	109
134882178106	109
134882178107	109
134882178108	109
134882178110	109
134882178111	109
134882178112	109
134882178113	109
134882256301	5013A
134882256302	5014A
134882256303	5009A
134882256305	5045A
134882256306	141A
134882256307	5009A
134882256308	5016A
134882256309	5016A
134882256310	144A
134882256311	5019A
134882256312	5011A
134882256313	5023A
134882256314	5024A
134882256315	5010A
134882256316	5016A
134882256317	5021A
134882256318	5018A
134882256319	5014A
134882256320	5033A
134882256321	146A
134882256322	139A
134882256323	5014A
134882256324	5027A
134882256325	5021A
134882256328	140A
134882256329	5090A
134882256330	5096A
134882256331	5031A
134882256332	5019A
134882256333	5002A
134882256334	5020A
134882256335	135A
134882256336	5083A
134882256337	5071A
134882256338	5018A
134882256339	5079A
134882256340	140A
134882256342	5082A
134882256343	139A
134882256344	5015A
134882256345	5017A
134882256346	5067A
134882256347	5014A
134882256348	5022A
134882256349	5031A
134882256350	5022A
134882256351	135A
134882256353	5077A
134882256354	142A
134882256356	139A
134882256357	5079A
134882256358	5086A
134882256359	145A
134882321507	5283A
134882321508	5283AK
134882392202	177
134882392203	177
134882392204	177
134882392206	177
134882392207	177
134882392208	177
134882392209	177
134882392210	177
134882392211	177
134882392212	177
134882392213	177
134882392214	177
134882392215	177
134882393301	177
134882393305	177
134882420301	177
134882420302	177
134882420303	519
134882420304	519
134882420305	177
134882466801	116
134882466802	116
134882466803	116
134882466804	116
134882466806	116
134882466807	116
134882466808	125
134882466812	506
134882466813	506
134882466814	506
134882466815	506
134882466816	506
134882466817	506
134882466818	506
134882466821	506
134882466825	506
134882466827	506
134882466828	506
134882732304	5944
134882921701	109
134882921702	109
134882921704	109
134882921705	109
134883461501	5075A
134883461502	5022A
134883461503	5066A
134883461504	5093A
134883461505	5070A
134883461506	5096A
134883461507	5075A
134883461508	147A
134883461509	5090A
134883461510	5010A
134883461511	5082A
134883461512	146A
134883461513	5068A
134883461514	5096A
134883461515	5018A
134883461516	5095A
134883461517	5001A
134883461518	5027A
134883461519	5067A
134883461520	146A
134883461521	5129A
134883461522	5029A
134883461523	5010A
134883461524	5028A
134883461525	5014A
134883461526	5031A
134883461527	5012A
134883461528	5141A
134883461530	148A
134883461531	5022A
134883461532	5016A
134883461533	5027A
134883461534	5117A
134883461535	5137A
134883461536	137A
134883461537	5077A
134883461538	136A
134883461539	5135A
134883461540	5010A
134883461541	135A
134883461542	5071A
134883461543	5006A
134883727201	5198AK
134883875401	5454
134883875402	5455
134883875403	5543
134883875404	5431
134883875405	5422
134883875406	5455
134884461544	5115A
202530001710	116(2)
301720490201	109
310720440170	121MP
310720490000	123A
310720490010	123A
310720490020	123A
310720490060	185
310720490070	121
310720490080	108
310720490100	123A
310720490150	123A
310720490190	121MP
353511050009	804
400100010160	102A
400100020120	102A
404100030180	158
404100900160	123A
404120010180	109
404120030100	109
404120030110	177
404120040100	109
404130010150	116
405130010150	116
933000611112	116
933001170112	102A
933009290112	137A
933022960012	108
933022960112	123A
933022970112	108
933076760112	191
1110991010100	198
1110991010200	198
1114206002300	1004
1114206002400	1004
1114206002600	1080
1114206003900	1080
1114206004000	712
1114206004600	712
1114206005200	1159
2025911018810	109
2025953101010	177
2035510069352	199
2035510069362	199
2035690040050	293
2035690040060	293
3535110500009	804
3535110510009	974
202523000018101	116
202252300017101	116
A00	7400
A01	177
A01(Motorola)	177
A01(Transistor)	160
A02	177
A02(I.C.)	7403
A03	7404
A-04	116
A04	116
A04(I.C.)	7405
A05	116
A05(I.C.)	7410
A06	116
A06-1-12	123A
A06(I.C.)	7420
A07	109
A08	506
A08-105018	130
A08-1050115	181
A08(I.C.)	7430
A09	7440
A-025	169
A054-103	109
A054-105	109
A054-108	123A
A054-109	129
A054-114	123A
A054-115	123A
A054-142	220
A054-148	107
A054-150	116
A054-151	142A
A054-154	130
A054-155	123A
A054-156	128
A054-157	108
A054-158	108
A054-159	108
A054-160	128
A054-163	108
A054-164	108
A054-165	703A
A054-170	107
A054-173	123A
A054-175	123A
A0-54-175	128
A054-186	128
A054-187	109
A054-195	123A
A0-54-195	123A
A054-206	128
A054-221	123A
A054-222	123A
A054-223	159
A054-224	175
A054-225	123A
A054-226	110
A054-228	177
A054-229	156
A054-230	116
A054-231	143A
A054-232	5079A
A054-233	123A
A054-234	123A
A054-470	108
A059-100	160
A059-101	160
A059-102	160
A059-103	160
A059-104	126
A059-105	126
A059-106	102A
A059-107	102A
A059-108	121
A059-109	123A
A059-110	128
A059-111	224
A059-114	116
A059-115	104
A059-116	102A
A059-117	138A
A059-118	125
A060-100	107
A061-105	107
A061-106	107
A061-107	126
A061-108	107
A061-109	107
A061-110	126
A061-111	126
A061-112	107
A061-114	102A
A061-115	102A
A061-116	131
A061-118	116
A061-119	139A
A065-101	116
A065-102	123A
A065-103	123A
A065-104	123A
A065-105	158
A065-106	102A
A065-108	123A
A065-109	123A
A065-110	123A
A065-111	131
A065-112	158
A065-113	123A
A066-12	177
A066-109	123A
A066-110	132
A066-111	229
A066-112	123A
A066-113	159
A066-113(2SC7325)	123A
A066-113A	159
A066-113AB	159
A066-114	152
A066-115	289
A066-116	195A
A066-117	237
A066-118	159
A066-118A	159
A066-119(1S1555)	177
A066-119(Germanium)	109
A066-119(Silicon)	177
A066-120	109
A066-121	109
A066-122	143A
A066-124	116
A066-125	904
A066-133(2SC7325)	143A
A066-143	199
A066-199	109
A066-199(1S1555)	177
A068-100	116
A068-101	109
A068-102	116
A068-103	139A
A068-104	125
A068-106	132
A068-107	132
A068-108	123A
A068-109	159
A068-109A	159
A068-111	108
A068-112	108
A068-113	123A
A068-114	175
A069-101	107
A069-102	107
A069-102/103	123A
A069-103	107
A069-104	123A
A069-104/106	123A
A069-105	102A
A069-106	123A
A069-107	158
A069-109	109
A069-111	110MP
A069-112	116
A069-114	107
A069-115	109
A069-116	107
A069-118	110
A069-119	107
A069-120	123A
A069-121	126
A069-122	123A
A090	109
A-0205	170
A0377	116
A0450(HEP)	413
A0455(HEP)	414
A0491A	116
A0500(HEP)	405
A0502(HEP)	401
A0666-118	290
A03004	5626
A04021	358
A04049B	116
A-04049-B	116
A04091A	116
A-04091-A	116
A-04092	116
A04092	116
A04092A	116
A04092B	116
A-04092-B	116
A-04093	116
A04093	116
A04093A	506
A04093-A	506
A04093A	116
A04093-A	116
A-04093A	116
A04093X	506
A04093-X	506
A04166-2	145A
A04201	133
A04201(JVC)	113
A04210-A	166
A04210A	116
A04212A	116
A-04212-A	116
A04212-A	125
A04212-A	116
A04212B	116
A-04212-B	116
A04212-B	116
A04226	116(3)
A-04226	116
A04230	506
A04230-A	506
A04231-A	166
A04233	116
A04234-2	139A
A04241-A	506
A04242	116
A-04242	116
A04284-A	166
A04294	506
A04294-1	506
A04299-201	502
A04299-202	503
A04299-251	503
A04331-021	116
A04331-023	116
A04331-043	116
A04332-007	138A
A04344-007	138A
A04344-026	5082A
A04350-022	116
A04710	119
A04716	166
A04727	120
A04731	116
A04735-A	118
A04901A	116
A-04901A	116
A042313	116
A-042313	116
A072133-001	767
A0311400	1128
A.184/5	123A
A1-3	126
A1A	154
A1A1	116
A1A5	116
A1A9	116
A1B	123A
A1B1	116
A1B5	116
A1B9	116
A1C	162
A1C1	116
A1C5	116
A1C9	116
A1D	163A
A1D1	116
A1D5	116
A1D9	116
A1DI	163A
A1DJ	163A
A1E	108
A1E1	116
A1E5	116
A1E9	116
A1F	123A
A1F1	116
A1F5	116
A1F9	116
A1G	107
A1G-1	107
A1G1	116
A1G-1A	108
A1G5	116
A1G9	116
A1H	123A
A1H1	125
A1H5	125
A1H9	125
A1H(Motorola)	163A
A1J	123A
A1K	108
A1K1	125
A1K5	125
A1K9	125
A1L	123A
A1M	154
A1M-1	107
A1M1	125
A1M5	125
A1M9	125
A1N	124
A1P	107
A1P-1	107
A1P-1A	107
A1P-5	108
A1P/4922	107
A1P-/4923	108
A1P/4923	107
A1P/4923-1	108
A1R	107
A1R-1	107
A1R-1/4925	108
A1R-1A	108
A1R-2	107
A1R-2/4926	108
A1R-2A	108
A1R-5	108
A1R/4924	107
A1R/4925	107
A1R/4925A	108
A1R/4926	107
A1R/4926A	108
A1R-24926	108
A1S	154
A1T	123A
A1T-1	123A
A1U	161
A1U(3rdIF)	233
A1U(Last IF)	233
A1V	123A
A1VE	123A
A1W	123A
A1Y	196
A1Z	233
A-1.5-01	116
A2A	154
A2A1	116
A2A4	116
A2A5	116
A2A9	116
A2B	123A
A2B1	116
A2B4	116
A2B5	116
A2B9	116
A2BRN	123A
A2C	108
A2C1	116
A2C4	116
A2C5	116
A2C9	116
A2D	108
A2D1	116
A2D4	116
A2D5	116
A2D9	116
A2E	130
A2E1	116
A2E-2	130
A2E4	116
A2E5	116
A2E9	116
A2EBLK	130
A2EBRN	130
A2EBRN-1	130
A2F	108
A2F1	116
A2F4	116
A2F5	116
A2F9	116
A2FGRN	123A
A2G	108
A2G1	116
A2G4	116
A2G5	116
A2G9	116
A2H	108
A2H1	125
A2H4	125
A2H5	125
A2H9	125
A2J	123A
A2K	154
A2K1	125
A2K4	125
A2K5	125
A2K9	125
A2L	108
A2M	107
A2M-1	107
A2M1	125
A2M4	125
A2M5	125
A2M9	129
A2MA	156
A2N	107
A2N-1	107
A2N-2	107
A2N-2A	108
A2N2156	213
A2P	107
A2P-5	108
A2S	130
A2S-3	130
A2SA550P	129
A2SA564F	129
A2SA564FR	159
A2SA666PQR	102A
A2SB240A	104
A2SB242A	104
A2SB248A	104
A2SC538PQR	123A
A2SC538R	199
A2SD226PQ	175
A2SD2260P	152
A2T	108
A2T682	103A
A2T919	108
A2U	124
A2V	108
A2W	108
A2Y	107
A2Z	154
A3A	108
A3A1	116
A3A3	116
A3A5	116
A3A9	116
A3B1	116
A3B3	116
A3B5	116
A3B9	116
A3C	108
A3C1	116
A3C3	116
A3C5	116
A3C9	116
A3D	108
A3D1	116
A3D3	116
A3D5	116
A3D9	116
A3E	123A
A3E1	116
A3E3	116
A3E5	116
A3E9	116
A3F	123A
A3F1	116
A3F3	116
A3F5	116
A3F9	116
A3G	123A
A3G1	116
A3G3	116
A3G5	116
A3G9	116
A3H	108
A3H-1	163A
A3H1	125
A3H3	125
A3H5	125
A3H9	125
A3J	199
A3K	199
A3K1	125
A3K3	125
A3K5	125
A3K9	125
A3L	157
A3L4-6001	130
A3L4-6001-01	130
A3M	154
A3M1	125
A3M3	125
A3M5	125
A3M9	125
A3MA	154
A3N	123A
A3N71	108
A3N72	108
A3N73	108
A3P	108
A3R	108
A3S	123A
A3SB	108
A3T	123A
A3T201	101
A3T202	101
A3T203	101
A3T918	161
A3T929	123A
A3T930	123A
A3T2221	123A
A3T2221A	123A
A3T2222	123A
A3T2222A	123A
A3T2484	192
A3T2894	159
A3T2906	159
A3T2906A	159
A3T2907	159
A3T2907A	193
A3T3011	123A
A3TE120	130
A3TE230	130
A3TE240	130
A3TX003	130
A3TX004	130
A3U	130
A3U-4	130
A3W	123A
A3Y	124
A3Z	123A
A4A	123A
A4A1	116
A4A-1-70	121
A4A-1-705	121
A4A-1A9G	121
A4A5	116
A4A9	116
A4B	199
A4B1	116
A4B5	116
A4B9	116
A4C1	116
A4C5	116
A4C9	116
A4D1	116
A4D5	116
A4D9	116
A4E	107
A4E1	116
A4E5	116
A4E-5	108
A4E9	116

To Be Replaced	ECG Replacement
A4F	199
A4F1	116
A4F5	116
A4F9	116
A4G	108
A4G1	116
A4G5	116
A4G9	116
A4H	154
A4H1	125
A4H5	125
A4H9	125
A4i7014	181
A4J	130
A4J BLK	130
A4J RED	130
A4JBRN	130
A4JD3B1	101
A4JRED	130
A4JRED-1	130
A4JX2A822	103A
A4K	184
A4K1	125
A4K5	125
A4K9	125
A4L	103A
A4M	123A
A4M1	125
A4M5	125
A4M9	125
A4N	123A
A4P	123A
A4R	123A
A4S	130
A4S-1	130
A4T	108
A4U	123A
A4V	123A
A4Y-1	107
A4Y-1A	108
A4Y-2	123A
A4Z	130
A5A	196
A5A1	116
A5A-1	184
A5A-1B	152
A5A-2	184
A5A2	116
A5A-3	184
A5A-4	184
A5A-5	184
A5A5	116
A5A9	116
A5A-IB	152
A5B	128
A5B1	116
A5B2	116
A5B5	116
A5B9	116
A5C	123A
A5C1	116
A5C2	116
A5C5	116
A5C9	116
A5D1	116
A5D2	116
A5D5	116
A5D9	116
A5E	188
A5E1	116
A5E2	116
A5E5	116
A5E9	116
A5F	190
A5F1	116
A5F2	116
A5F5	116
A5F9	116
A5FF	190
A5G	184
A5G1	116
A5G2	116
A5G5	116
A5G9	116
A5H	123A
A5H1	125
A5H2	125
A5H5	125
A5H9	125
A5J	108
A5K	123A
A5K1	125
A5K2	125
A5K5	125
A5K9	125
A5L	123A
A5M	123A
A5M1	125
A5M2	125
A5M5	125
A5M9	125
A5N	123A
A5P	123A
A5R	123A
A5S	123A
A5T	191
A5T-1	191
A5T2222	123A
A5T2907	159
A5T3644	159
A5T3645	159
A5T3821	457
A5T3903	123A
A5T3904	123A
A5T3905	159

To Be Replaced	ECG Replacement
A5T3906	159
A5T4125	159
A5T4126	159
A5T5058	287
A5T5059	287
A5TA	191
A5U	123A
A5V	181
A5W	123A
A5Y	184
A-6-67703	130
A-6-67703-A-7	130
A6A	163A
A6A1	156
A6A5	156
A6A9	156
A6B	108
A6B1	156
A6B-3-70	121MP
A6B-3-705	121MP
A6B-3A9G	121MP
A6B5	156
A6B9	156
A6C	184
A6C1	156
A6C-1	184
A6C-1 RED	184
A6C-2	184
A6C-2 BLK	184
A6C-3	184
A6C-3 WHT	184
A6C-4	184
A6C5	156
A6C9	156
A6C GRN	184
A6D	188
A6D-1	188
A6D1	156
A6D-2	188
A6D-3	188
A6D5	156
A6D9	156
A6E	108
A6E1	156
A6E5	156
A6E9	156
A6F	108
A6F1	156
A6F5	156
A6F9	156
A6G	188
A6G1	156
A6G5	156
A6G9	156
A6H	123A
A6H1	156
A6H5	156
A6H9	156
A6HD	123A
A6J	123A
A6K	123A
A6K1	156
A6K5	156
A6K9	156
A6L	130
A6LBLK	130
A6LBLK-1	130
A6LBRN	130
A6LBRN-1	130
A6LRED	130
A6LRED-1	130
A6M	163A
A6M1	156
A6M5	156
A6M9	156
A6N	130
A6N1	506
A6N5	506
A6N-6	130
A6N9	506
A6P	108
A6R	123A
A6S	123A
A6T	108
A6U	108
A6V	107
A6V-5	108
A6W	184
A6Y	190
A6Z	163A
A6ZH	163A
A7-12	130
A7-13	130
A7A	123A
A7A1	156
A7A5	156
A7A9	156
A7A30	108
A7A31	108
A7A32	108
A7B	124
A7B5	156
A7B9	156
A7B (Motorola)	124
A7C	116
A7C1	156
A7C5	156
A7C7	156
A7C9	156
A7C (Motorola)	184
A7D	116
A7D1	156
A7D5	156
A7D9	156
A7E	116

To Be Replaced	ECG Replacement
A7E1	156
A7E5	156
A7E9	156
A7E(Transistor)	123A
A7F	190
A7F1	156
A7F5	156
A7F9	156
A7G	116
A7G1	156
A7G5	156
A7G9	156
A7H1	156
A7H5	156
A7H9	156
A7K1	156
A7K5	156
A7K9	156
A7M	130
A7M1	156
A7M5	156
A7M-5(Transistor)	130
A7M9	156
A7M42394B39	755
A7M42894B39	755
A7N	108
A7N1	506
A7N5	506
A7N9	506
A7P	108
A7R	123A
A7S	123A
A7S604T	612
A7S4511H	610
A7S4511T	610
A7S4513H	611
A7S4513T	611
A7S4514H	612
A7S4514T	612
A7S6011H	610
A7S6011T	610
A7S6013H	611
A7S6013T	611
A7S6014H	612
A7S6017T	613
A7T	123A
A7U	108
A7V	108
A7W	108
A7Y	123A
A7Z	184
A8-1	160
A8-1-70	160
A8-1-70-1	160
A8-1-70-12	160
A8-1-70-12-7	160
A8-1A	160
A8-1A0	160
A8-1A0R	160
A8-1A1	160
A8-1A2	160
A8-1A3	160
A8-1A3P	160
A8-1A4	160
A8-1A4-7	160
A8-1A4-7B	160
A8-1-A-4-7B	160
A8-1A5	160
A8-1A5L	160
A8-1A6	160
A8-1A6-4	160
A8-1A7	160
A8-1A7-1	160
A8-1A8	160
A8-1A9	160
A8-1A9G	160
A8-1A19	160
A8-1A21	160
A8-1A82	160
A8-10	160
A8-11	160
A8-12	160
A8-13	160
A8-14	160
A8-15	160
A8-16	160
A8-17	160
A8-18	160
A8-19	160
A8A	194
A8B	123A
A8C	185
A8D	128
A8E	196
A8F	241
A8G	123A
A8J	188
A8K	196
A8L	123A
A8M	162
A8N	194
A8P	130
A8P-2-70	102A
A8P-2-705	102A
A8P-2A9G	102A
A8P404F	121
A8P404-ORN	121
A8P-404-ORN	121
A8R	199
A8S	108
A8T	163A
A8U	130
A8V	154
A8VA	154
A8W	130

To Be Replaced	ECG Replacement
A8Y	241
A8Z	194
A9-175	199
A9A	108
A9B	123A
A9C	172A
A9D	108
A9E	123A
A9F	123A
A9G	123A
A9H	123A
A9J	123A
A9K	162
A9L-4-70	102A
A9L-4-705	102A
A9L-4A9G	102A
A9M	191
A9N	181
A9P	162
A9R	163A
A9S	123A
A9T	123A
A9U	123A
A9V	152
A9W	123A
A9Y	123A
A10	74H40
A10A	116
A10B	116
A10C	116
A10D	116
A10E	116
A10G05-010-A	123A
A10G05-011-A	123A
A10G05-015-D	123A
A10M	116
A10N	125
A10P	125
A11	178MP
A12	102A
A12-1	225
A12-1-70	123A
A12-1-705	123A
A12-1A9G	123A
A12-2	225
A12A	102A
A12B	102A
A12C	102A
A12D	102A
A12H	102A
A12(I.C.)	7451
A12V	102A
A13	7454
A13-0032	130
A13-14604-1A	121MP
A13-14604-1B	121MP
A13-14604-1C	121MP
A13-14604-1D	121MP
A13-14604-1E	121MP
A13-14777-1	121MP
A13-14777-1A	121MP
A13-14777-1B	121MP
A13-14777-1C	121MP
A13-14777-1D	121MP
A13-14778-1A	121MP
A13-14778-1B	121MP
A13-14778-1C	121MP
A13-14778-1D	121MP
A13-15809-1	225
A13-17918-1	130
A13-22741-2	121MP
A13-23594-1	130
A13-28432-1	225
A13-33188-2	130
A13-55062-1	225
A13-86416-1	103A
A13-86420-1	101
A13-87433-1	101
A13A2	116
A13AA2	116
A13B2	116
A13C2	116
A13D2	116
A13(Diode)	177
A13E2	116
A13F2	116
A13M2	116
A13N1	123A
A13(rectifier)	116
A13(transistor)	160
A14	7472
A14-586-01	121
A14-601-10	130
A14-601-12	130
A14-601-13	130
A14-602-19	225
A14-602-36	225
A14-602-37	225
A14-602-63	108
A14-603-05	108
A14-603-06	108
A14-1001	126
A14-1002	126
A14-1003	126
A14-1004	102A
A14-1005	102A
A14-1006	102A
A14-1007	102A
A14-1008	102A
A14-1009	102A
A14-1010	102A
A14A8-1	160
A14A8-19	160
A14A8-19G	160
A14A10G	121

To Be Replaced	ECG Replacement
A14A-70	121
A14A-705	121
A14B	116
A14C	116
A14D	116
A14E	116
A14E2	116
A14F	116
A-14F-C	519
A14M	116
A14N	125
A14P	125
A14PD1	506
A14PD2	506
A14PD3	506
A14(Transistor)	160
A15	7474
A15-1001	126
A15-1002	126
A15-1003	126
A15-1004	102A
A15-1005	102A
A15-1007	109
A15-1008	116
A15A	5801
A15B	5802
A15BK	102A
A15BL	102A
A15BLU	102A
A15C	5803
A15D	5804
A15E	5805
A15F	5800
A15H	102A
A15K	102A
A15M	5806
A15N	5808
A15R	102A
A15(Transistor)	102A
A15U(Diode)	5800
A15U(Transistor)	102A
A15V	102A
A15VR	102A
A15Y	102A
A16	102A
A16A1	103A
A16A2	103A
A17	102A
A17H	102A
A17(I.C.)	7490
A18-4	130
A18H	102A
A18(I.C.)	7493A
A19	126
A19-020-072	108
A19(I.C.)	7495
A20	126
A20K	159
A20KA	159
A21	126
A22B	156
A22B1	156
A22D	156
A22D1	156
A22M	156
A23	116
A23B	5944
A23B1	5944
A24	108
A24MW594	108
A24MW595	108
A24MW596	108
A24MW597	108
A24T-016-016	108
A25-12	338
A25-1001	126
A25-1002	126
A25-1003	126
A25-1004	102A
A25-1005	102A
A25-1006	102A
A25-1007	109
A25-1008	116
A25A509-016-101	123A
A25A305020101	128
A26	100
A27(RCA)	175
A28	126
A29	126
A29V082B03	129
A30(diode)	109
A30(transistor)	126
A31	100
A31-0206	108
A32	102A
A32-2805-50-1	128
A32-2809	108
A33	102A
A34-6001-1	121
A34-6002-17	121
A35	154
A35(Japan)	154
A36	100
A37	126
A38	126
A39	126
A40	100
A40-6704	113
A40-6722	113
A40A	5942
A40B	5944
A40C	5946
A40D	5948
A40E	5950
A40F	5940

To Be Replaced	ECG Replacement
A40M	5952
A41	160
A41A	5982
A41B	5986
A41C	5989
A41D	5990
A41E	5992
A41F	5990
A41M	5994
A42	160
A42X00022-01	5834
A42X00041-01	5019A
A42X00269-01	116
A42X00286-01	102
A42X00290-01	156
A42X00340-01	109
A42X00373-01(Transistor)	102
A42X00373-01(Zener)	5070A
A42X00374-01	116
A42X00390-01	177
A42X00434-01	123A
A42X00454-01	5192A
A42X00460-01	135A
A42X00480-01	5074A
A42X210	103A
A43	126
A44	100
A45	126
A45-1	126
A45-2	126
A45-3	126
A46-867-3	154
A46-8614-3	101
A46-86101-3	107
A46-86109-3	107
A46-86110-3	107
A46-86133-3	107
A46-86301-3	107
A46-86302-3	107
A48-10075A01	121MP
A48-10075A02	121MP
A48-10075A03	121MP
A48-10075A04	121MP
A48-10075A05	121MP
A48-10075A06	121MP
A48-10075A07	121MP
A48-10075A08	121MP
A48-10103A01	121MP
A48-10103A02	121MP
A48-10103A03	121MP
A48-10103A04	121MP
A48-10103A05	121MP
A48-10103A06	121MP
A48-10103A07	121MP
A48-10103A08	121MP
A48-10103A09	121MP
A48-10103A10	121MP
A48-10103A11	121MP
A48-40247G01	108
A48-43351A02	108
A48-63076A81	121
A48-63076A82	108
A48-63078A52	109
A48-64978A10	121MP
A48-64978A11	121MP
A48-64978A24	121MP
A48-97046A05	108
A48-97046A06	108
A48-97046A07	108
A48-97127A06	108
A48-97127A12	108
A48-97127A18	108
A48-124216	101
A48-124217	101
A48-124218	101
A48-124220	101
A48-124221	101
A48-125233	101
A48-125234	101
A48-125235	101
A48-125236	101
A48-128239	101
A48-134520	101
A48-134648	225
A48-134700	101
A48-134727	121
A48-134731	121
A48-134789	108
A48-134819	154
A48-134837	108
A48-134843	154
A48-134845	108
A48-134853	154
A48-134898	154
A48-134902	108
A48-134904	108
A48-134907	121
A48-134919	154
A48-134922	108
A48-134923	108
A48-134924	108
A48-134925	108
A48-134926	108
A48-134927	154
A48-134931	101
A48-134945	108
A48-134961	108
A48-134962	108
A48-134963	108
A48-134964	108
A48-134965	108
A48-134966	108
A48-134981	108
A48-137002	154
A48-137035	154

To Be Replaced	ECG Replacement
A48-137071	108
A48-137075	108
A48-137076	108
A48-137077	108
A48-137102	121
A48-137197	108
A48-137213	121
A48-137214	121
A48-137215	121
A48-137216	121
A48-137217	121
A48-137218	121
A48-137219	121
A48-137220	121
A48-869254	103A
A48-869283	103A
A48-869476	103A
A48-869476A	103A
A49	126
A50(rectifier)	116
A50(transistor)	102A
A51	160
A52	126
A53	126
A54-3	152
A54-96-001	123A
A54-96-002	123A
A54-96-003	159
A55	100
A56(Germanium)	160
A56(Silicon)	234
A57	126
A57A144-12	108
A57A145-12	108
A57B124-10	121
A57C5	103A
A57C12-1	154
A57C12-2	154
A57D1-122	154
A57L5-1	121
A57M2-16	154
A57M2-17	154
A57M3-7	121
A57M3-8	121
A58	126
A59	126
A60	126
A61	160
A62-18427	121
A62-19581	108
A63-18426	154
A63-18427	121
A64	102A
A65	102A
A65-09-220	290
A65-1-1A9G	160
A65-1-70	160
A65-1-705	160
A65-1A9G	160
A65-2-70	103A
A65-2-705	103A
A65-2A9G	103A
A65-4-70	101
A65-4-705	101
A65-4A9G	101
A65A19G	160
A65A-70	160
A65A-705	160
A65B19G	126
A65B-70	126
A65B-705	126
A65C-19G	121
A65C19G	121
A65C-70	121
A65C-705	121
A65-P11305-0001A	519
A65-P11311-0001	177
A65-P11324-0001	519
A66	102A
A66-1-70	102A
A66-1-705	102A
A66-1A9G	102A
A66-2-70	102A
A66-2-705	102A
A66-2A9G	102A
A66-3-3A9G	102A
A66-3-70	102A
A66-3-705	102A
A66-3A9G	102A
A66-P11138-0001	128
A66X0043-001	177
A67	126
A67-07-244	199
A67-08-760	316
A67-15-280	195A
A67-33-340	199
A67-33-540	289
A67-37-940	229
A67-70-960	297
A67-76-200	236
A68-23-560	152
A69	126
A69IM4	177
A70	160
A70-12	339
A70A	6154
A70B	6154
A70C	6154
A70D	6154
A70E	6156
A70F	160
A70L	160
A70M	6156
A70MA	160
A70N	6158

To Be Replaced	ECG Replacement
A70P	6158
A70S	6158
A70T	6158
A71	126
A71A(Rectifier)	6154
A71A(Transistor)	126
A71AB	126
A71AC	126
A71B(Rectifier)	6154
A71B(Transistor)	126
A71BS	126
A71C	6154
A71D(Rectifier)	6154
A71D(Transistor)	126
A71E	6156
A71M	6156
A71N	6158
A71P	6158
A71S	6158
A71T	6158
A71Y	126
A72	126
A72-49-600	519
A72-83-300	6408
A72-86-700	5072A
A72BLU	126
A72BRN	126
A72ORN	126
A72WHT	126
A73	160
A73-16-179	177
A74	160
A74-3-3A9G	100
A74-3-70	100
A74-3-705	100
A74-3A9G	100
A75	126
A75-68-500	116
A75B	126
A76	126
A76-11770	121
A77	126
A77A	126
A77A19G	105
A77A-70	105
A77A-705	105
A77B	126
A77B19G	121MP
A77B-70	121MP
A77B-705	121MP
A77C	126
A77C19G	121
A77C-70	121
A77C-705	121
A77D	126
A78	126
A78B	126
A78C	126
A78D	126
A79	160
A80	126
A81	160
A82	126
A83	126
A83P2B	129
A84	160
A84A19G	121
A84A-70	121
A84A-705	121
A85	126
A86	160
A86-3-1	115
A86-4-1	114
A86-9-1	113
A86-10-2	101
A86-44-2	101
A86-213-2	154
A86-214-2	154
A86-215-2	154
A86-316-2	154
A86-565-2	194
A86X0030-100	121MP
A87	126
A88	123A
A88-70	160
A88-705	160
A88B19G	160
A88B-70	160
A88B-705	160
A88C19G	100
A88C-70	100
A88C-705	100
A88(Japan)	123A
A89	160
A90A	6354
A90B	6354
A90C	6354
A90D	6354
A90E	6356
A90M	6356
A90N	6358
A90P	6358
A90S	6358
A90T	6358
A90T2	108
A90(Transistor)	126
A91A	6354
A91B	6354
A91C	6355
A91D	6354
A91E	6356
A91M	6356
A91N	6358
A91P	6358
A91S	6358

To Be Replaced	ECG Replacement
A91T	6358
A92	126
A92-1-70	105
A92-1-705	105
A92-1A9G	105
A93	126
A94	126
A95-5280	113
A95-5281	116
A-95-5281	116
A95-5286	358
A95-5289	116
A-95-5289	116
A95-5295	119
A-95-5295	119
A95-5296	118
A-95-5296	118
A95-5297	113
A95-5314	500A
A97A83	121
A99S07	101
A99SK5	101
A99SK7	101
A100A	126
A100B	126
A100C	126
A-100(Rect.)	116
A100(rectifier)	116
A100(transistor)	126
A101	126
A101-A(Rect.)	116
A101A(rectifier)	116
A101A(transistor)	126
A101AA	126
A101AY	126
A101B	126
A101BA	126
A101BB	126
A101BC	126
A101BX	126
A101C	126
A101CA	126
A101CV	126
A101CX	126
A101E	126
A101QA	126
A101V	126
A101X	126
A101Y	126
A101Z	126
A102	126
A-102	126
A102A	126
A102AA	126
A102AB	126
A102B	126
A102BA	126
A102BN	126
A102CA	126
A102(Japan)	126
A102TV	126
A103	126
A103A	126
A103B	126
A103C	126
A103CA	126
A103CAK	126
A103CG	126
A103DA	126
A104	126
A104-8	225
A104A	126
A104B	126
A104D	126
A104(Japan)	126
A104P	126
A104Y	126
A105	160
A106	123A
A106(Japan)	123A
A107	128
A107(Japan)	160
A108	123A
A108A	123A
A108B	123A
A108(Japan)	160
A109	126
A109C	909D
A110	199
A110C	910D
A110(Japan)	199
A111	123A
A111(Japan)	126
A111T2	154
A112	126
A112-000172	159
A112-000185	159
A112-000187	159
A113	126
A114C	125
A114(Transistor)	102A
A115	128
A115(Japan)	102A
A116	123A
A116(Japan)	102A
A117	160
A118	160
A119	129
A120	129
A120A	129
A120P1	159
A121	126
A121-1	159
A121-1RED	159
A121-15	101

To Be Replaced	ECG Replacement
A121-16	101
A121-17	101
A121-21	101
A121-50	101
A121-361	154
A121-444	159
A121-446	159
A121-480	108
A121-495	159
A121-496	159
A121-497	159
A121-497WHT	159
A121-585	107
A121-585B	107
A121-602	159
A121-603	159
A121-679	159
A121-687	107
A121-699	159
A121-746	159
A121-762	101
A121-774	159
A121-1410	101
A122	160
A122-1962	103A
A122GRN	159
A122(Japan)	126
A122YEL	159
A123	126
A123-7	116
A124	126
A125	126
A126	160
A127	160
A127-7	101
A128	123A
A128A	123A
A128(Japan)	158
A128(Japan)	158
A129-30	101
A129-34	159
A129(Transistor)	158
A130	154
A130-149	159
A130-40315	159
A130-40429	159
A130(Japan)	160
A130-ORN	154
A130ORN	108
A130-V10	154
A130V100	108
A131	126
A132	116
A132-1	116
A132(Japan)	126
A132(Transistor)	154
A133	194
A133(Japan)	126
A134	126
A135	160
A136	126
A137	123A
A137(Japan)	126
A137(NPN)	123A
A137(PNP)	159
A138	199
A138(Japan)	102A
A139	199
A139(Japan)	126
A141B	126
A141C	126
A141(Japan)	126
A141(NPN)	123A
A141(PNP)	126
A142	123A
A142A	126
A142B	126
A142C	126
A142(Japan)	126
A143	123A
A143(Japan)	126
A144	126
A-144-3078	5547
A144A-1	121
A144A-19	121
A144C	126
A145	126
A145A	126
A145C	126
A146	100
A146B-3	121MP
A146B-39	121MP
A147	100
A148	100
A148P2	102A
A148P-2	102A
A148P2-29	102A
A148P-29	102A
A149	100
A149L-4	102A
A149L-49	102A
A150	126
A151	123A
A151(Japan)	160
A152	123A
A152(Japan)	160
A153	123A
A153(Japan)	126
A154(NPN)	108
A154(PNP)	126
A155(NPN)	108
A155(PNP)	126
A156	123A
A-156	123A
A156(Japan)	126

To Be Replaced	ECG Replacement
A157	123A
A157A	123A
A157B	123A
A157C	123A
A157(Japan)	126
A158	123A
A158A	123A
A158B	123A
A-158B	123A
A158C	123A
A-158C	123A
A159	123A
A159A	123A
A159B	123A
A159C	123A
A160	159
A160(Japan)	100
A161	159
A162	159
A163	160
A164(NPN)	108
A164(PNP)	126
A165(NPN)	108
A165(PNP)	126
A166	126
A167	100
A168	123A
A-168	123A
A168A	100
A168(Japan)	100
A168P1	121MP
A169	100
A170	129
A170(Japan)	100
A171	159
A171(Japan)	100
A172	100
A172A	100
A173	102A
A173B	102A
A174	102
A175	126
A176	126
A176-025-9-002	108
A177	159
A177A	159
A177(A)	159
A177AB	159
A178A	159
A178AB	159
A178B	159
A178BA	159
A179A	159
A179AC	159
A179B	159
A179BB	159
A179Q	159
A180	160
A181	102A
A182	100
A183	102A
A187TV	102A
A188	126
A189	126
A192	132
A194	133
A195	133
A-195C	159
A196	133
A197	102
A198	100
A200	116
A200-052	159
A200(REACH)	724
A200(Reach)	724
A201-0	126
A201A	126
A201B	126
A201E	126
A201N	126
A201TVO	126
A202	126
A202A	126
A202B	126
A202C	126
A202D	126
A202(Japan)	126
A203	126
A203A	126
A203AA	102A
A203AA(PNP)	126
A203B	102A
A203B(PNP)	126
A203(NPN)	186
A203P	102A
A203P(PNP)	126
A203(PNP)	102A
A204	100
A205	100
A206	100
A207	100
A208(Japan)	100
A208(NPN)	186
A209	100
A210	278
A210(Japan)	100
A211(Japan)	100
A212	100
A213	126
A214	126
A215	160
A216	126
A217	100
A218	160
A219	160

To Be Replaced	ECG Replacement
A220(Transistor)	160
A221	160
A222	160
A223	160
A224	160
A-225	543
A-225-1	160
A225(OVEN RECT)	543
A225)TRANSISTOR)	160
A226	160
A227	160
A228	160
A229	160
A230	160
A231	158
A232	158
A233	160
A233A	160
A233B	160
A233C	160
A234	160
A234A	160
A234B	126
A234C	126
A235	160
A235A	126
A235B	160
A235C	126
A236	126
A237	126
A238	126
A239	160
A240	160
A240A	160
A240B	160
A240B2	160
A240BL	160
A241	160
A242	160
A243	160
A244	161
A244(AMC)	161
A244(Japan)	160
A245	108
A245(AMC)	108
A245(Japan)	160
A246	123A
A246(AMC)	123A
A246(Japan)	126
A246V	126
A247	154
A247(AMC)	154
A247(Japan)	126
A248	161
A248(AMC)	123A
A248(Japan)	100
A249	123A
A249(AMC)	128
A250	126
A251	126
A252	126
A253(Japan)	126
A254	126
A255	126
A256	126
A257	126
A258	126
A-258-1	126
A259	126
A260	126
A261	126
A262	126
A263	126
A264	126
A265	126
A266	126
A267	126
A268	126
A269	126
A270	195A
A270(Japan)	126
A271(Japan)	126
A272	152
A272(Japan)	126
A273	152
A273(Japan)	126
A274(NPN)	195A
A274(PNP)	126
A275(Japan)	126
A276(Japan)	160
A277(Japan)	100
A278	171
A278(Japan)	100
A279	171
A279(Japan)	100
A280	126
A281	126
A282	100
A283	100
A284	100
A285	160
A286	160
A287	160
A288	126
A288A	126
A289	126
A290	126
A291(Transistor)	126
A292	126
A293	126
A294	126
A295	126
A296	160
A297	160
A297L012C01	159

To Be Replaced	ECG Replacement
A297V073C01	129
A297V073C02	129
A297V073C03	159
A297V073C04	159
A297V082B03	129
A298	160
A300	116
A301	123A
A301(Japan)	126
A302	102A
A303	102A
A304	102A
A305	100
A306	123A
A306(Japan)	160
A307	123A
A307(Japan)	160
A308	126
A309	126
A310	154
A310(Japan)	126
A311	128
A311(Japan)	100
A312	100
A313	126
A314	126
A315	126
A316	126
A321	108
A321(Japan)	160
A322	160
A322(Japan)	160
A323	123A
A323(Japan)	160
A324	123A
A324(Japan)	160
A325	126
A326	126
A327(Transistor)	160
A329	126
A329A	126
A329B	126
A330	100
A331	126
A332	100
A335	126
A337	126
A338	126
A339	126
A340	160
A341	160
A341-0A	160
A341-0B	160
A341-OB	160
A342	160
A342A	160
A343	126
A344	123A
A344(Japan)	126
A345	123A
A345(Japan)	160
A346	123A
A346(Japan)	160
A347	160
A348	160
A349	160
A350	126
A350A	100
A350C	126
A350H	126
A350R	126
A350T	126
A350TY	126
A350Y	126
A351	126
A351A	126
A351B	126
A352	126
A352A	126
A352B	126
A353	126
A353-9008-001	129
A353A	126
A353C	126
A354	126
A354A	126
A354B	126
A355	126
A355A	126
A356	126
A357	126
A358	126
A359	126
A360	160
A361	160
A362	160
A363	160
A364	126
A365	126
A366	126
A367	126
A368	126
A369	126
A372	160
A373	160
A374	102A
A375	160
A376	160
A376(Japan)	126
A377	160
A378	160
A379	160
A380	126
A381	126
A382	126

To Be Replaced	ECG Replacement
A383	126
A384	126
A385	126
A385A	126
A385D	126
A391	126
A392	126
A393	126
A393A	126
A394	126
A395	126
A396(Transistor)	102
A397	102
A398	126
A399	126
A400(rectifier)	116
A400(transistor)	126
A401	160
A402	159
A403	160
A404	160
A405	160
A406	102A
A407	102A
A408	160
A409	160
A410	160
A411	160
A412	126
A413	160
A414	100
A415	123A
A415(Japan)	100
A416	121
A417	108
A417-19	161
A417-43	129
A417-62	121
A417-115	154
A417-116	159
A417-132	159
A417-138	129
A417-153	159
A417-154	107
A417-170	129
A417-176	159
A417-182	159
A417-184	159
A417-190	107
A417-196	159
A417-200	159
A417-201	159
A417-205	107
A417-234	129
A417-235	159
A417(Japan)	160
A418	108
A419	108
A419(Japan)	160
A420	108
A420(Japan)	160
A421	160
A422	160
A422-A	116
A425	160
A426	160
A427	108
A427(Japan)	108
A428	126
A429	288
A429-0981-12	161
A429-O	288
A429R	288
A429Y	288
A430	161
A430(Japan)	160
A431	160
A431A	160
A432	160
A432A	160
A433	160
A434	160
A435	160
A435A	160
A435B	160
A436	126
A437	126
A438	126
A440	160
A440A	160
A446	126
A447	126
A448	160
A450	160
A450H	160
A451	161
A451H	160
A451(Japan)	160
A452	160
A452H	160
A453	126
A454	123A
A454(Japan)	126
A455	709
A455(IC)	709
A455(transistor)	126
A456	126
A457	126
A460	160
A461	160
A462	160
A463	160
A464	160
A465-181-19	161
A466	128

To Be Replaced	ECG Replacement
A466-2	126
A466-3	126
A466BLK	126
A466BLU	126
A466(Japan)	126
A466YEL	126
A467	229
A467G	159
A467G(Japan)	159
A467G-0	159
A467G-0(Japan)	159
A467G-R	159
A467G-R(Japan)	159
A467G-Y	159
A467G-Y(Japan)	159
A467(Japan)	159
A467-0	159
A467-0(Japan)	159
A467-Y	159
A467-Y(Japan)	159
A468	126
A469	126
A470	126
A471	126
A471-1	126
A471-2	126
A471-3	126
A472A	126
A472B	126
A472C	126
A472D	126
A472E	126
A472(Japan)	126
A472(NPN)	123A
A472(PNP)	126
A473-GR	153
A473(Japan)	153
A473(NPN)	108
A473-0	153
A473(PNP)	153
A473-R	153
A473-Y	153
A473Y	153
A474	126
A476	126
A477	126
A478	126
A479	126
A480	108
A480(Japan)	159
A481	161
A481A0028	123A
A481A0030	159
A481A0031	123A
A482	161
A482(Japan)	159
A483	161
A484	323
A486	161
A486(Japan)	189
A488-A0001	177
A488-A0060	519
A489	161
A489(Japan)	153
A489-0	153
A489-R	153
A489-Y	153
A490	153
A490-0	153
A490(Japan)	153
A490-LBGL1	153
A490(power)	153
A490(RF)	153
A490Y	153
A492	161
A493	159
A493BL	234
A493GR	159
A493-0	159
A493Y	159
A494	123A
A494-GR	159
A494(Japan)	123A
A494-0	159
A494-Y	159
A495A	159
A495D	159
A495-G	159
A495G-GR	159
A495G-0	159
A495G-R	159
A495G-Y	159
A495GR	159
A495H	159
A495J	159
A495(Japan)	159
A495(NPN)	107
A495-0	159
A495O	159
A495-0	159
A495(PNP)	159
A495Q	159
A495-R	159
A495TM-0	159
A495W	159
A495-Y	159
A495Y	159
A496	107
A496(Japan)	185
A496-0	185
A496-R	185
A496-Y	185
A496Y	185
A497	108

To Be Replaced	ECG Replacement
A497(Japan)	129
A498(F.E.T.)	222
A498(Japan)	129
A498Y	129
A499	159
A499-0	159
A499-R	159
A499-Y	159
A500	116
A500(Japan)	159
A500-0	159
A500-R	159
A500-Y	159
A501	129
A502	159
A503	129
A503GR	129
A503-0	129
A503-R	129
A503-Y	129
A504	129
A504GR	129
A504-R	129
A504-Y	129
A505	185
A505-0	185
A505-R	185
A505-Y	185
A506	160
A507	160
A508	160
A509	290
A509-0	290
A509GR	290
A509-0	290
A509Q	290
A509R	290
A509Y	290
A509-Y	290
A510	159
A510-0	159
A510-R	159
A511	159
A511-0	159
A511-R	159
A512	159
A512-0	159
A512-R	159
A513	159
A513-0	159
A513-R	159
A514-023553	103
A514-023626	116
A514-025607	116
A514-027662	102A
A-514-027662	102A
A514-027757	116
A514-028072	116
A514-028073	116
A514-032815	103
A514-033338	123A
A514-033903	116
A514-035596	116
A514-038984	156
A514-040296	133
A514-044910	159
A514-047830	186
A514-0339903	116
A515	130
A515(BK)	124
A516	129
A516A	129
A517	126
A518	126
A522	130
A522-3	130
A522A	159
A522(Japan)	159
A523A	129
A523(NPN)	130
A523(PNP)	129
A524	106
A525	160
A525A	160
A525B	160
A527	129
A528	129
A530	159
A530H	159
A532	129
A532A	129
A532B	129
A532C	129
A532D	129
A532E	129
A532F	129
A537	129
A537A	129
A537AA	129
A537AB	129
A537AC	129
A537AH	129
A537B	129
A537C	129
A537H	129
A538	102A
A539	159
A539L	159
A539S	159
A542	159
A544	159
A545	193A
A545GRN	193A
A545K	193A
A545KLM	193A

To Be Replaced	ECG Replacement
A545L	193A
A545LM	193A
A545M	193A
A546	129
A546A	129
A546AK	292
A546AL	292
A546B	129
A546E	129
A546H	129
A547	129/427
A547A	129/427
A548	129
A549A	288
A549AH	288
A550	159
A550A	159
A550AQ	159
A550AR	159
A550AS	159
A550Q	159
A550R	159
A550S	159
A551	129
A551C	129
A551D	129
A551E	129
A552	129
A553	129
A554	129
A554A	129
A555	294
A556-142	109
A558	129
A559	129
A559A	129
A560	129
A561	159
A561GR	159
A561-0	159
A561-R	159
A561R	159
A561-Y	159
A561Y	159
A562	290
A562-0	290
A562G	290
A562GR	290
A562-0	290
A562R	290
A562-R	290
A562Y	290
A562-Y	290
A564	234
A564-0	234
A564A	234
A564ABQ	234
A564AO	234
A564AP	234
A564AQ	234
A564AQGD	234
A564AS	234
A564AT	234
A564D	234
A564F	234
A564FQ	234
A564FR	234
A564G	234
A564H	234
A564J	234
A564-O	159
A564P	234
A564PQR	234
A564PQ	234
A564PQR	234
A564Q	234
A564-Q	234
A564QGD	234
A564QHD	234
A564QR	234
A564R	234
A564S	234
A564T	234
A564Y	234
A565	159
A565A	159
A565B	159
A565C	159
A565D	159
A565K	159
A565Q	234
A566	218
A566A	218
A566B	218
A566C	218
A566H	218
A567	123A
A567A	123A
A-567A	123A
A567(Japan)	159
A568	159
A568B	159
A568C	159
A568D	159
A568E	159
A568F	159
A568G	159
A568GN	159
A568H	159
A568J	159
A568K	159
A568L	159
A568M	159
A568-OR	159
A568R	159

To Be Replaced	ECG Replacement
A568X	159
A568Y	159
A569	159
A569J	159
A570(Transistor)	159
A571	129
A572	130
A572-1	130
A573D	290
A575K	298
A575L	298
A576-0001-002	159
A576-0001-013	159
A578	234
A578A	234
A578B	234
A578C	234
A579	234
A579A	234
A579B	234
A579C	234
A580-040215	181
A580-040315	181
A580-040515	181
A580-080215	181
A580-080315	181
A580-080515	181
A592Y	159
A593	123A
A594	129
A594-0	129
A594-R	129
A594-Y	129
A595	102A
A595C	129
A597	129
A600	116
A600(rectifier)	116
A603	159
A604	129
A606	129
A606S	129
A607	129/400
A607A	129/400
A607B	129/400
A607C	129/400
A607D	129/400
A607K	129/400
A607L	129/400
A607M	129/400
A607N	129/400
A607S	129/400
A607SA	129/400
A607SB	129/400
A607SC	129/400
A607SD	129/400
A608A	159
A608B	159
A608C	159
A608-C	159
A608D	159
A608-D	159
A608E	159
A608-E	159
A608E-NP	159
A608F	159
A608-F	159
A608F-NF	159
A608F-NP	159
A608G	159
A608NP	159
A609	159
A609A	159
A609B	159
A609C	159
A609D	159
A609E	159
A609F	159
A609G	159
A610	159
A610B	159
A611	159
A611-4E	159
A613	218
A614	218
A615-1008	160
A615-1009	160
A615-1010	102A
A615-1011	102A
A615-1012	109
A616	218
A617K	159
A618K	159
A620	234
A620WL	234
A623	307
A623-0	307
A623A	307
A623B	307
A623C	307
A623D	307
A623G	307
A623R	307
A623Y	307
A624	307
A624A	307
A624B	307
A624C	307
A624D	307
A624E	307
A624G	307
A624GN	307
A624L	307
A624LG	307
A624R	307

To Be Replaced	ECG Replacement
A624Y	307
A626	219
A626K	219
A626L	219
A626M	219
A626N	219
A627	219
A627K	219
A627L	219
A627M	219
A627N	219
A628	159
A628A	159
A628AD	159
A628AE	159
A628AF	159
A628C	159
A628D	159
A628E	159
A628F	159
A629	159
A634	187A
A634A	187A
A634B	187A
A634C	187A
A634D	187A
A634K	187A
A634L	187A
A634M	187A
A636	187A
A636(4)K	187
A636(4)L	187
A636A	187A
A636B	187A
A636C	187A
A636D	187A
A636K	187A
A636L	187A
A636M	187A
A637	159
A638	288
A639	288
A640	159
A640A	159
A640B	159
A640C	159
A640D	159
A640E	159
A640F	159
A640(Japan)	159
A640L	159
A640M	159
A640S	159
A641	234
A641A	234
A641B	234
A641C	234
A641D	234
A641(Japan)	234
A641L	234
A641M	234
A641(NPN)	123A
A641(PNP)	234
A641S	234
A642	159
A642-254	108
A642-260	108
A642-268	108
A642-271	121MP
A642A	159
A642B	159
A642C	159
A642D	159
A642E	159
A642F	159
A642(Japan)	159
A642L	294
A642L(NPN)	199
A642R	159
A642S(NPN)	199
A642V	290
A642W	159
A642Y	290
A643	193A
A643A	193A
A643B	193A
A643C	193A
A643D	193A
A643E	193A
A643F	193A
A643L	193A
A643R	193A
A643S	193A
A643V	193A
A643W	193A
A644L	199
A644S	199
A645	211
A645L	199
A645S	199
A646	187A
A648	219
A648A	219
A648B	219
A648C	219
A649	281
A649L	123A
A649S	123A
A656	187A
A656A	281
A656L	187A
A656M	187A
A657	219
A657A	219
A658	219

To Be Replaced	ECG Replacement
A658A	219
A659	159
A659A	159
A659B	159
A659C	159
A659D	159
A659E	159
A659F	159
A659G	159
A659L	159
A659P	159
A659R	159
A659Y	159
A661	298
A661GR	298
A661-0	298
A661R	298
A661Y	298
A663	219
A666	234
A666A	234
A666H	234
A666HR	234
A666QRS	234
A666R	234
A666S	234
A667-GRN	199
A667-ORG	199
A667RED	108
A667-RED	199
A667-YEL	199
A668-GRN	199
A668-ORG	199
A668-YEL	199
A669	159
A669-GRN	199
A669-YEL	199
A670	153
A670A	153
A670B	153
A670C	153
A671	292
A671-0	153
A671A	292
A671B	292
A671C	292
A671K	292
A671KA	292
A671KB	292
A671KC	292
A672	159
A672A	159
A672B	159
A672C	159
A673	289
A673-0	290
A673A	290
A673AA	290
A673AB	290
A673AC	290
A673AD	290
A673AE	290
A673AS	290
A673ASC	290
A673B	290
A673(B)	290
A673C	290
A673C2	294
A673D	290
A673-0	290
A673WT	290
A675	159
A675A	159
A675B	159
A675C	159
A677	129
A677HL	159
A678	159
A678E	159
A678HL	159
A678(SONY)	159
A679	281
A679B	294
A679R	281
A679Y	281
A680	281
A680R	281
A680Y	281
A682	183
A682-0	183
A682-Y	183
A683	294
A683Q	294
A683R	294
A683RS	294
A683S	294
A684	294
A684Q	294
A684R	294
A690D	159
A690V081H97	121
A691M5	177
A691M5-2	177
A692T5	116
A692T5-0	116
A692X13-4	109
A692X16-0	116
A694X1	5022A
A694X1-0A	5022A
A695C	298
A695D	298
A695E	298
A696	288
A696A	288
A696C	288

To Be Replaced	ECG Replacement
A696D	288
A696E	288
A697	294
A697C	294
A697D	294
A697E	294
A699	187A
A699-0	187A
A699A	187A
A699A-Q	187A
A699AO	187A
A699AP	187A
A699AQ	187A
A699AR	187A
A699CF	187A
A699-O	187A
A699P	187A
A699Q	187A
A699R	187A
A700	187A
A700B	187A
A700Y	187A
A701	159
A701F	159
A701FJ	159
A701FO	159
A702(T03 NPN)	162
A702(T092 PNP)	234
A703	307
A703C	307
A703D	307
A703E	307
A705	163A
A706H	211
A707	298
A707V	298
A708	129
A708A	129
A708B	129
A708C	129
A715	185
A715A	185
A715B	185
A715C	185
A715D	185
A715FB	108
A715WBP	187A
A715WT-B	185
A715WT-C	185
A715WT-D	185
A715WTA	185
A715WTB	185
A715WTC	185
A715wTD	185
A717	211
A718	159
A719	290
A719-0	290
A719A	290
A719B	290
A719K	290
A719P	290
A719PQ	290
A719PQR	290
A719Q	290
A719QR	290
A719R	290
A719RS	290
A719S	290
A719W	290
A720	298
A720P	298
A720Q	298
A720R	298
A720S	298
A721	234
A721S	234
A721T	234
A721U	234
A722	234
A722S	234
A722T	234
A722U	234
A723	159
A723A	159
A723B	159
A723C	159
A723D	159
A723E	159
A723F	159
A723R	159
A725	234
A725EH2AB1	125
A725F	234
A725G	234
A725H	234
A726	234
A726F	234
A726G	234
A726H	234
A730	159
A731	159
A733	294
A733A	294
A733AQ	294
A733B	294
A733C	294
A733D	294
A733E	294
A733F	294
A733H	294
A733I	294
A733IQ	294
A733K	294
A733P	294

To Be Replaced	ECG Replacement
A733(P)	294
A733P1	294
A733P2	294
A733PQ	294
A733Q	294
A733QP	294
A733R	294
A736	129
A738C	185
A738D	187A
A740	292
A740A	292
A740AB	292
A742	129
A743	185
A743A	185
A743AA	185
A743AB	185
A743AC	185
A743AD	185
A743B	185
A743C	185
A743D	185
A744	219
A745	281
A746	219
A747	285
A747A	285
A747B	199
A748	123A
A748B	123A
A748C	199
A748Q	153
A749	288
A749A	288
A749B	123A
A749C	199
A751	193A
A751Q	193A
A751QR	193A
A751R	193A
A751S	193A
A752	193A
A752P	193A
A752Q	193A
A752R	193A
A752S	193A
A753	281
A753-4004-248	159
A753A	281
A753B	281
A753C	281
A754	153
A754A	153
A754B	153
A754C	153
A754D	153
A755	153
A755A	153
A755B	153
A755C	153
A755D	153
A756	281
A756A	281
A756B	281
A756C	281
A757	281
A757A	281
A757B	281
A757C	281
A758	281
A758A	281
A758B	281
A758C	281
A759A	159
A759B	159
A763WL	234
A764	218
A765(Rect.)	5809
A765(Transistor)	218
A768	153
A768-0	153
A768F	153
A768Y	153
A772	294
A772B1	107
A772D1	108
A772EH	107
A772FE	107
A772J	294
A772JN	294
A3772.01	107
A774	234
A774A	234
A775	292
A775A	292
A775AA	292
A775AB	292
A775AC	292
A775B	292
A775C	292
A777	298
A777R	298
A778	288
A778A	288
A778AK	288
A778K	288
A779	187A
A779K	187A
A779KB	187A
A779KC	187A
A779KD	187A
A780AK	187A
A780AKA	187A
A780AKB	187A

To Be Replaced	ECG Replacement
A780AKC	187A
A780AKD	187A
A786	159
A800	125
A800-511-00	129
A800-516-00	129
A800-523-01	159
A800-523-02	159
A800-527-00	159
A808	281
A814	292
A814-0	292
A814-Y	292
A815	292
A815-0	292
A815-Y	292
A825	234
A825Q	234
A825R	234
A826	159
A826P	159
A826Q	159
A826R	159
A826RY	159
A826S	159
A829	159
A829A	159
A829B	159
A829C	159
A829D	159
A829E	159
A829F	159
A833	159
A835	189
A835E	189
A835H	189
A836	129
A836C	289
A836D	129
A836E	129
A836F	129
A837	281
A838	159
A838B	159
A838C	159
A839	292
A839-0	292
A839R	292
A839Y	292
A840	294
A840H	288
A840JC	288
A840JD	288
A840JM	294
A842	234
A844	129
A844B	129
A844C	129
A844D	129
A844E	129
A844F	129
A845Q	234
A850	298
A854	234
A854R	234
A854RY	234
A861	187A
A861JK	187A
A872	234
A872AE	234
A872EF	288
A872C	234
A872D	234
A872E	234
A872F	234
A879	288
A879P	288
A879Q	288
A880-250-107	129
A885R	211
A886	185
A886NQ	185
A886NR	185
A886Q	185
A886R	185
A886V	185
A886VQ	185
A887Q	187
A887R	187
A893AE	288
A893AF	288
A909-1008	160
A909-1009	126
A909-1010	126
A909-1011	102A
A909-1012	102A
A909-1013	102A
A909-1015	109
A909-1016	110
A909-1017	109
A909-1018	116
A909-1019	116
A909-27125-160	108
A912Q	288
A912R	288
A912S	288
A916-31025-5B	108
A916-31025-58	108
A916K	288
A916L	288
A916M	288
A921-59B	108
A921-62B	108
A921-63B	108
A921-64B	108

To Be Replaced	ECG Replacement
A921-70B	159
A933	294
A937	123A
A937-1	123A
A937-3	123A
A940	292
A944E	129
A945-0	159
A950	159
A950-0	129
A950-Y	129
A950Y	159
A952	129
A952L	129
A962	189
A964-17887	121
A991-01-0098	159
A991-01-1225	159
A991-01-1316	108
A991-01-1319	159
A991-01-3058	159
A992-00-1192	121
A1000	125
A-1005-725	159
A1016	129
A1024	112
A1030	159
A1041	1013
A1109	108
A1110	1014
A1111	1002
A1111P	1002
A1124C	121
A-1141-5932	128
A-1141 6062	123A
A1170	108
A1200	1003
A1201	1003
A1201B	1003
A1201C	1003
A1201C-W	1003
A1201T	1003
A1202	1003
A1214	159
A1220	160
A1226AL	186A
A1226AP	186A
A1226AQ	186A
A1226AR	186A
A1238	199
A1243	100
A1314	128
A1341	128
A1342	710
A1353	1080
A1364	1004
A1364N	1004
A1365	712
A1365P	712
A1367	1159
A1368	738
A1369(IC)	1178
A1373	1094
A1374	1121
A1375	1122
A1376	1122
A1377	160
A1378	160
A1379	123A
A-1379	123A
A1380	123A
A-1380	123A
A1383	126
A1384	126
A-1384	160
A1396	101
A1401-2	316
A1401-3	316
A1401-4	316
A1409	154
A1412-1	123A
A1414A	121
A1414A9	121
A1460	199
A1462	108
A1465-1	160
A1465-4	101
A1465-19	160
A1465-29	103A
A1465-49	101
A1465A	160
A1465A9	160
A1465B	160
A1465B9	160
A1465C	121
A1465C9	121
A1466-1	102A
A1466-2	102A
A1466-3	102A
A1466-19	102A
A1466-19-	102A
A1466-29	102A
A1466-39	102A
A1472-19	123
A1474-3	100
A1474-39	100
A1477A	105
A1477A9	105
A1477B	121MP
A1477B9	121MP
A1477C	121
A1477C9	121
A1484A	121
A1484A9	121
A1488B	160

To Be Replaced	ECG Replacement
A1488B9	160
A1488C	100
A1488C9	100
A1492-1	105
A1492-19	105
A1518	108
A1519	108
A1520	108
A1521	108
A1558-17	159
A1567	123A
A-1567	123A
A1567-1	123A
A-1634 1125	519
A1820-0203-1	941
A1820-0219-1	941M
A1821-0001-1	912
A1826-0007-1	941
A1844-17	159
A-1853-0009-1	106
A-1853-0010-1	106
A-1853-0016-1	159
A-1853-0020-1	159
A-1853-0027-1	159
A-1853-0034-1	106
A-1853-0036-1	159
A-1853-0039-1	159
A-1853-0041-1	129
A-1853-0049-1	159
A-1853-0050-1	234
A-1853-0053-1	218
A-1853-0058-1	159
A-1853-0062-1	159
A-1853-0063-1	218
A-1853-0065-1	159
A-1853-0066-1	234
A-1853-0077-1	234
A-1853-0086-1	234
A-1853-0092-1	159
A-1853-0098-1	234
A-1853-0099-1	159
A-1853-0220-1	218
A1853-0233-1	197
A-1853-0233-1	153
A-1853-0234-1	153
A-1853-0254-1	153
A-1853-0285-1	159
A-1853-0300-1	234
A-1853-0321-1	159
A-1853-0404-1	199
A-1854-0003-1	123A
A-1854-0019-1	123A
A-1854-0022-1	128
A-1854-0023-1	199
A-1854-0025-1	123A
A-1854-0027-1	123A
A-1854-0071-1	123A
A-1854-0087-1	128
A-1854-0088-1	199
A-1854-0090-1	128
A-1854-0092-1	107
A-1854-0094-1	123A
A-1854-0099-1	123A
A-1854-0201-1	123A
A-1854-0215-1	123A
A-1854-0241-1	123A
A-1854-0246-1	123A
A-1854-0251-1	123A
A-1854-0255-1	123A
A-1854-0284-1	199
A-1854-0291-1	130
A-1854-0294-1	130
A-1854-0354-1	123A
A-1854-0358-1	194
A-1854-0365-1	194
A-1854-0408-1	123A
A-1854-0420-1	152
A-1854-0434-1	123A
A-1854-0449-1	175
A-1854-0458	181
A-1854-0464	152
A-1854-0471-1	123A
A-1854-0474-1	194
A-1854-0485	108
A-1854-0492-1	123A
A1854-0533	194
A-1854-0533	194
A-1854-0541-1	123A
A-1854-0554-1	123A
A-1854-JBD1	108
A1858	101
A1867-17	159
A1884-0209	5697
A1884-0218	5697
A-1901-0025-1	177
A-1901-0033-1	177
A-1901-0050-1	519
A-1901-0053-1	177
A-1901-0096-1	177
A-1901-044-1	519
A-1901-0150-1	177
A-1901-0156-1	177
A-1901-0196-1	519
A-1901-0461-1	519
A-1901-1067-1	177
A1901-5338	159
A1946	116
A-1946	116
A-2008-9140	519
A-2010-5409-B	912
A-2010-5409-RB	912
A2019ZC	123A
A2039-2	101
A2057A2-198	159
A2057B2-115	107

To Be Replaced	ECG Replacement
A2057B104-8	154
A2057B106-12	159
A2057B108-6	159
A2057B110-9	129
A2057B112-9	129
A2057B114-9	129
A2057B115-9	129
A2057B116-9	129
A2057B121-9	129
A2057B122-9	129
A2057B145-12	129
A2057B163-12	129
A2090	154
A2311	234
A2332	161
A2410	123A
A2411	123A
A2412	123A
A2413	123A
A2414	158
A2415	175
A2416	195A
A2417	163A
A2418	130
A2419	109
A2420	109
A2421	116
A2422	116
A2423	156
A2424	174
A2428	159
A2434	123A
A2448	159
A2458	506
A2459	118
A2460	116
A2461	116
A2462	116
A2464	161
A2465	161
A2466	123A
A2468	123A
A2469	123A
A2470	123A
A2471	128
A2473	109
A2474	142A
A2475	113
A2476	109
A2479	161
A2480	161
A2481	116
A2482	129
A2485	116
A2498	108
A2499	123A
A2620	154
A2652-919	133
A2746	161
A2798	159
A2920	316
A3148	727
A3201(IC)	1179
A3300	1005
A3301	1006
A3301A	1006
A3350	1217
A3513	159
A3523	129
A3533	129
A3533-1	129
A3540	159
A3545	225
A3547	225
A3549	159
A3552	225
A3553	225
A3559	159
A3562	159
A3563	159
A3574	159
A3581	159
A3582	225
A3607	101
A3609	101
A3616-1	129
A4000	1007
A4030	1008
A4030P	1009
A4031	1010
A4031P	1010
A4032	1011
A4032P	1011
A4050	1150
A4050P	1150
A4051	1150
A4051P	1150
A4086	159
A4087	159
A4100	1180
A4101	1180
A4101(IC)	1180
A4126	159
A4131P	1010
A4201	113
A4212A	125
A4212-A	116
A4247	121
A4310	159
A4347	121
A4400	1193
A4400(IC)	1193
A4400Y	1211
A4430	1211
A4442	159

To Be Replaced	ECG Replacement
A4478	129
A4648	154
A4700	101
A4745	159
A4789	108
A4802-00004	159
A4815	159
A4819	154
A4822-130-40348	159
A4838	154
A4843	154
A4844	159
A4851	108
A4853	154
A4950	159
A5226-1	159
A5253	121
A6181-1	154
A6661QRS	159
A7253	154
A8405	159
A8540	159
A8867	159
A9218	519
A9228-3	519
A9903	6408
A10105	116
A-10105	116
A10113	116
A-10113	116
A10118	116
A-10118	116
A10142	116
A10164	116
A10165	116
A10169	116
A11744	132
A11745	132
A12163	121
A12178	121
A12546	154
A12594	159
A12888	159
A13658E	712
A13658E3	712
A14010-0	316
A14665-2	103A
A14743	175
A15927	121
A20371	109
A20372	123A
A21268	138A
A22008	159
A24100	123A
A25762-010	154
A25762-012	154
A30270	159
A30278	129
A30290	159
A30302	121
A34715	121
A35084	121
A35201	121
A35260	121
A36508	109
A36539	142A
A36577	129
A-36617	519
A36896	121
A40410	129
A41440	159
A42946	113
A42946B	113
A46051-1	124
A47392R-0	128
A49463	358
A-54806-A	5547
A59625-1	159
A59625-2	159
A59625-3	159
A59625-4	159
A59625-5	159
A59625-6	159
A59625-7	159
A59625-8	159
A59625-9	159
A59625-10	159
A59625-11	159
A59625-12	159
A65023-63	159
A67335H	289
A71687-1	159
A73301	294
A73302	294
A76228	199
A78331	159
A94004	121
A94037	159
A94063	129
A95115	101
A95211	101
A95227	159
A95232	159
A112363	130
A-113110	159
A-113110	159
A-113335	5942
A-113367(Diode)	519
A-113367(Pwr. Rect.)	125
A116078	159
A116081	154
A116084	129
A116284	129
A-118038	125
A118284	159

To Be Replaced	ECG Replacement
A119730	159
A119983	129
A-120018	128
A-120077	5021A
A-120125(Diode)	177
A-120125(Pwr. Rect.)	125
A-120278	123A
A-120304	175
A-120327	130
A-120407	5188A
A-120417	159
A-120420	5005A
A-120526	159
A121467	159
A121659	159
A124047	159
A124623	108
A124624	108
A124755	159
A-125278	5013A
A125329	108
A-125332	123A
A126524	159
A126700	159
A126705	154
A126707	159
A126715	159
A126718	159
A126719	159
A126724	129
A127364	176
A127712	154
A129509	108
A129510	108
A129511	108
A129512	108
A129513	108
A129571	108
A129572	108
A129573	108
A129574	108
A129697	159
A129699	159
A130139	159
A-132591	5802
A-134166-2	142A
A138436	569
A-140605	130
A188103	192
A190429	159
A198794-1	101
A218012DS	121
A297074C11	129
A300043-06	176
A322805-50-1	128
A335854	912
A391593	181
A417014	181
A417032	152
A417033	130
A417034	192
A417756	197
A489751-028	159
A489751-031	159
A573501	154
A610074-1	159
A610075-1	154
A610083	159
A610083-1	159
A610083-2	159
A610083-3	159
A610110-1	159
A610120-1	159
A631961	235
A650232E	159
A650235G	159
A650236A	159
A650238A	159
A650372D	290
A650923F	290
A650925C	290
A650925H	290
A660031	121MP
A660097	121
A670720K	123A
A670722D	123A
A670729B	123A
A671656K	295
A673351K	289
A673354K	289
A673355H	289
A673355K	289
A675315F	171
A675318A	287
A675419H	199
A678760A	198
A678760C	198
A678970A	198
A678970H	198
A678971C	198
A678971D	198
A683401	175
A701584-00	159
A701589-00	159
A720657	5547
A759500	125
A772738	108
A772739	108
A815185	129
A815185E	129
A815199	159
A815199-6	159
A815203-5	121MP
A815211	159
A815213	159

To Be Replaced	ECG Replacement
A815229	159
A815247	159
A970246	159
A970248	159
A970251	159
A970254	159
A984193	159
A1471114-1	159
A1473549-1	129
A1473563-1	159
A1473570-1	159
A1473574-1	159
A1473590-1	159
A1473591-1	159
A1473597-1	159
A1473616-1	129
A1746711	177
A2006681-95	108
A2057013-0004	159
A2057013-0701	159
A2057013-0702	159
A2057013-0703	159
A2090056-1	121
A2090056-5	121
A2090056-27	121
A2091859-0025	121
A2091859-0720	121
A2091859-10	121
A2091859-11	121
A2092418	101
A2092418-0711	101
A2092693-0724	108
A2092693-0725	108
A2370773	199
A2498512	159
A3011112	128
A3170717	154
A3170757	225
A3902441	130
A4037764-2	129
A5010005	519
A5320111	159
A6046940	312
A6315611	235
A6317800	165
A6317802	165
A6317900	238
A6317901	238
A6319400	198
A6319403	198
A6319500	196
A6319611	235
A6319640	322
A6502360	294
A6532300	292
A6532921	129
A6610140	153
A6707244	123A
A6708760	316
A6708850	233
A6733280	199
A6733340	199
A6733540	289
A6737940	229
A6738040	229
A6738701	162
A6770960	297
A6771373	238
A6773802	162
A6823540	152
A6823560	152
A6843401	175
A7000900	109
A7001800	109
A7102001	116
A7246602	177
A7246711	177
A7246727	177
A7249601	519
A7252802	614
A7252805	614
A7279039	121
A7279049	121
A7285774	121
A7285778	121
A7285900	136A
A7286100	137A
A7286120	137A
A7286201	5071A
A7286300	5071A
A7287500	142A
A7287513	142A
A7288504	5081A
A7289047	121
A7290594	121
A7291252	121
A7297043	121
A7297092	121
A7297093	121
A7568250	506
A7568300	506
A7568500	116
A7568600	116
A7568700	125
A7570013-01	159
A7572100	116
A7572200	116
A7576004-01	159
A7580111	125
A7580910	506
A7582000	506
A7803610	5465
A7978850	506
A7978855	506
A8015613	129

To Be Replaced	ECG Replacement
A-11095924	123A
A11159761	519
A-11166527	130
A11200482	159
A-11237336	123A
A11414257	123A
A-11790169	519
A-18530053-1	218
A20030703-0702	159
A23114050	159
A23114051	159
A23114550	159
A25114130	154
A43021415	123A
A43023843	130
A43023845	159
A80052402	130
A80414120	130
A80414130	130
A-PS-1503399-0-0	218
A-PS-1509730-0-0	181
A-PS-1510196-0-0	181
AA015	112
AA1	100
AA1M	225
AA2	101
AA2A	225
AA2K	225
AA2SB240A	121
AA2Z	225
AA3	160
AA3M	225
AA4	121
AA5	105
AA8-1-70	160
AA8-1-705	160
AA8-1A9G	160
AA10	147A
AA10-1	147A
AA50	116
AA100	116
AA101	5402
AA102	5404
AA107	5401
AA108	5402
AA109	5402
AA111	109
AA112	109
AA112P	109
AA113	109
AA114	109
AA115	5402
AA116	109
AA116(SCR)	5404
AA117	109
AA118	109
AA119	109
AA120	109
AA121	109
AA123	109
AA130	109
AA131	109
AA132	109
AA133	225
AA133(Diode)	109
AA134	109
AA135	109
AA136	109
AA137	109
AA138	109
AA139	109
AA140	109
AA142	109
AA143	109
AA143S	109
AA144	109
AA200	116
AA218	109
AA300	116
AA310	225
AA400	116
AA500	116
AA600	116
AA779	109
AA800	125
AA1000	125
AA113852-2	909
AAY10-120	5872
AAY15	109
AAY18	109
AAY22	109
AAY-22	116
AAY27	109
AAY30	109
AAY33	109
AAY46	109
AAY139	109
AAZ10	109
AAZ18	109
AAZ18D	116
AB35H	189
AB50	156
AB100	156
AB200	156
AB300	156
AB400	156
AB500	156
AB600	156
AB700	156
AB800	156
AB1000	156
AB2027	146A
AC06BSR	5673
AC06BT	56004
AC06DSR	5675

To Be Replaced	ECG Replacement
AC06DT	56006
AC10BSR	5673
AC10BT	56004
AC10DSR	5675
AC10DT	56006
AC30	156
AC50	156
AC50(DIODE)	177
AC50(Rectifier)	5800
AC100	156
AC100(Philco)	283
AC105	102A
AC106	102A
AC107	160
AC-107	102A
AC107M	160
AC108	102A
AC109	102A
AC110	102A
AC113	102A
AC-113	102A
AC-113A	102A
AC114	102A
AC-114	102A
AC115	102A
AC116	102A
AC-116	102A
AC117	102A
AC-117	102A
AC117A	102A
AC-117A	102A
AC117B	102A
AC117P	102A
AC-117P	102A
AC118	102A
AC119	102A
AC120	102A
AC121	102A
AC121-IV	102A
AC-121IV	158
AC121-V	102A
AC121V	158
AC121-VI	102A
AC121VI	158
AC121-VII	102A
AC121VII	158
AC122	102A
AC-122	102A
AC122-30	102A
AC122GRN	102A
AC122RED	102A
AC122YEL	102A
AC123	102A
AC-123	102A
AC124	102A
AC125	102A
AC-125	102A
AC126	102A
AC-126	102A
AC127	103A
AC-127	103A
AC127-01	103A
AC127-132	103A
AC128	158
AC-128	102A
AC128-01	158
AC128/01	158
AC128K	158
AC129	160
AC130	101
AC131	102A
AC131-30	158
AC132	102A
AC-132	102A
AC132-01	102A
AC133A	102A
AC134	102A
AC135	102A
AC136	102A
AC137	102A
AC138	158
AC139	158
AC141	103A
AC141B	103A
AC-141B	103A&158
AC141K	103A
AC-141K	103A&158
AC142	158
AC142K	158
AC148	121
AC150	102A
AC-150	102A
AC150GRN	102A
AC150YEL	102A
AC151	102A
AC-151	102A
AC151-IV	102A
AC151IV	158
AC151R	102A
AC151-RIV	102A
AC151RIV	158
AC151-RV	102A
AC151RV	158
AC151-RVI	102A
AC151RVI	158
AC151-V	102A
AC151V	158
AC151-VI	102A
AC151VI	158
AC151-VII	102A
AC151VII	158
AC152	158
AC-152	102A
AC152-IV	102A
AC152-V	102A

To Be Replaced	ECG Replacement
AC152V	158
AC152-VI	102A
AC152VI	158
AC153	158
AC153K	158
AC154	158
AC-154	102A
AC155	102A
AC-155	102A
AC156	102A
AC-156	102A
AC157	103
AC-157	103A
AC160	102A
AC160A	102A
AC160B	102A
AC160GRN	102A
AC160RED	102A
AC160YEL	102A
AC161	102A
AC-161	102A
AC162	102A
AC-162	102A
AC163	102A
AC164	126
AC165	102A
AC-165	102A
AC166	158
AC-166	102A
AC167	158
AC-167	102A
AC168	102A
AC-168	102A
AC169	126
AC-169	102A
AC170	102A
AC171	102A
AC172	103A
AC-172	103A
AC173	102A
AC175	103A
AC-175A	103A
AC-175B	103A
AC-175P	103A
AC176	103A
AC176K	158
AC178	158
AC179	103A
AC180	158
AC180K	158
AC181	103A
AC181K	103A
AC182	102A
AC183	103A
AC-183	103A&158
AC184	102A
AC185	103A
AC186	103A
AC-186	103A&158
AC187	103A
AC187/01	101
AC187K	103A
AC187R	103A
AC188	158
AC188/01	158
AC188K	158
AC191	102A
AC192	102A
AC193	158
AC193K	158
AC194	103A
AC194K	103A
AC200	156
AC300	5804
AC400	5804
AC500	5806
AC600	5806
AC800	5808
AC1000	5809
AC9082	159
AC9083	159
AC9084	159
AC9085	159
AC12801	158
AC18701	103A
AC18801	158
AC-N7B	102A
ACDC9000-1	159
ACO6BSR	5673
ACO6BT	56004
ACO6DSR	5675
ACO6DT	56006
ACR83-1001	126
ACR83-1002	126
ACR83-1003	126
ACR83-1004	100
ACR83-1005	100
ACR83-1006	100
ACR83-1007	109
ACR83-1008	116
ACR810-101	126
ACR810-102	126
ACR810-103	126
ACR810-104	100
ACR810-105	100
ACR810-106	100
ACR810-107	109
ACR810-108	116
ACY16	121
ACY17	102
ACY-17	102
ACY17-1	102A
ACY18	102
ACY-18	102
ACY18-1	102A

To Be Replaced	ECG Replacement
ACY19	102
ACY-19	102
ACY19-1	102A
ACY20	102A
ACY-20	102
ACY20-1	102A
ACY21	102A
ACY-21	102A
ACY21-1	102A
ACY22	102A
ACY-22	102A
ACY22-1	102A
ACY23	102A
ACY-23	102A
ACY23-V	102A
ACY23V	158
ACY23-VI	102A
ACY23VI	158
ACY24	160
ACY27	102A
ACY28	102A
ACY29	102A
ACY30	102A
ACY31	102A
ACY32	102A
ACY-32	102A
ACY32-V	102A
ACY32V	158
ACY32-VI	102A
ACY32VI	158
ACY33	102A
ACY33-VI	158
ACY33VI	158
ACY33-VII	158
ACY33VII	158
ACY33-VIII	158
ACY34	102A
ACY35	102A
ACY36	102A
ACY38	102A
ACY39	176
ACY40	100
ACY41	102A
ACY41-1	102A
ACY44	102A
ACY44-1	102A
ACZ	160
AD-1UF	116
AD8	506
AD10	116
AD29	156
AD29A-4	159
AD29A-5	159
AD29A-6	159
AD29A-9	159
AD-29B	506
AD29E-1	159
AD29E-2	159
AD29E4	159
AD29E5	159
AD29E6	159
AD29E7	159
AD29E8	159
AD29E9	159
AD29E10	159
AD29S	506
AD-29S	506
AD30	177
AD30A1	159
AD30A2	159
AD30A3	159
AD30A4	159
AD30A5	159
AD50	116
AD100	116
AD100(Diode)	177
AD103	121
AD104	121
AD105	121
AD130	121
AD130-III	121
AD130-IV	121
AD130-V	121
AD131	121
AD131-III	121
AD131-IV	121
AD131-V	121
AD132	121
AD133	179
AD138	121
AD138/50	121
AD139	104
AD140	121
AD-140	121
AD142	179
AD143	179
AD143B	179
AD143R	121
AD145	121
AD-148	121
AD149	104
AD-149	121
AD149-01	121
AD149-02	121
AD149B	121
AD149C	121
AD149-IV	121
AD149-V	121
AD150	121
AD-150	121
AD150(Diode)	177
AD150-IV	121
AD150-V	121
AD152	131
AD-152	121

To Be Replaced	ECG Replacement
AD153	121
AD155	131
AD156	131
AD-156	121
AD157	155
AD-157	121
AD159	121
AD-159	121
AD160	175
AD161	155
AD162	131
AD164	131
AD165	155
AD166	127
AD167	127
AD169	131
AD200	116
AD200(Diode)	177
AD262	131
AD263	131
AD301AN	975
AD710CH	910
AD710CN	910D
AD711CH	911
AD711CN	911D
AD741C	941
AD741CH	941
AD741CN	941D
AD4001	116
AD4002	125
AD4003	125
AD4004	125
AD4005	125
AD4006	125
AD4007	125
AD13850	121
ADY22	121
ADY23	121
ADY24	121
ADY26	213
ADY-26	105
ADY27	121
ADY-27	102A
ADY28	121
ADZ11	105
ADZ12	105
AE1A	156
AE1B	156
AE1C	156
AE1D	156
AE1E	156
AE1F	156
AE1G	156
AE3A	5800
AE3B	5801
AE3C	5802
AE3D	5804
AE3E	5806
AE3F	5808
AE3G	5809
AE10	177
AE30	177
AE50	177
AE-50	102A
AE100	177
AE150	177
AE200	177
AE301	548
AE900	786
AE902	786
AE904	743
AE-904	743
AE904-01	743
AE-904-01	743
AE904-02	743
AE-904-03	743
AE904-03	743
AE904-3	743
AE-904-3	743
AE904-53	743
AE906	726
AE-906	726
AE906-51	726
AE-907	737
AE907-51	737
AE907@	723
AE907@	737
AE908	789
AE908-51	789
AE920	1232
AEX9846	130
AEX79846	130
AEX-82308	223
AEX-85715	129
AF1(Diode)	506
AF101	160
AF-101	100
AF102	160
AF105	126
AF105A	160
AF-105A	160
AF106	160
AF106A	160
AF107	160
AF108	126
AF109	160
AF-109	160
AF109R	160
AF110	160
AF111	160
AF112	160
AF113	160
AF114	160
AF114N	160

To Be Replaced	ECG Replacement
AF115	160
AF115N	160
AF116	160
AF116N	160
AF117	160
AF117C	160
AF117N	160
AF118	160
AF119	160
AF120	126
AF121	160
AF-121	160
AF121S	160
AF122	160
AF124	160
AF125	160
AF126	160
AF127	160
AF127/01	160
AF128	160
AF129	126
AF130	126
AF131	126
AF132	126
AF133	126
AF134	126
AF135	126
AF136	126
AF137	126
AF137A	160
AF138	126
AF138/290	100
AF139	160
AF142	160
AF143	160
AF144	126
AF146	160
AF147	160
AF148	160
AF149	160
AF150	160
AF164	160
AF165	160
AF166	160
AF-166	160
AF167	160
AF168	160
AF169	160
AF170	160
AF171	160
AF172	160
AF178	160
AF179	160
AF180	160
AF181	160
AF182	160
AF-182	160
AF185	160
AF186	160
AF186G	160
AF186W	160
AF187	102A
AF188	102A
AF192	101
AF193	160
AF200	160
AF200U	102
AF201	160
AF201C	160
AF201U	102
AF202	160
AF202L	160
AF202S	160
AF239	160
AF239S	160
AF240	160
AF251	160
AF252	160
AF253	160
AF256	160
AF267	160
AF279	160
AF280	121
AF306	160
AF699	159
AF3570	159
AF3590	159
AF21490	159
AFCS1170F	159
AFS-160-1017	109
AFS-160-1020	110
AFS-160-1021	116(4)
AFS24226	159
AFT0019M	159
AFT052	159
AFT1341	159
AFT1746	159
AFY10	126
AFY11	126
AFY12	160
AFY14	160
AFY15	160
AFY16	160
AFY18	126
AFY18C	160
AFY18D	160
AFY18E	160
AFY19	160
AFY34	160
AFY37	160
AFY39	160
AFY40	160
AFY40K	160
AFY40R	160
AFY41	160

@, * — See special notes on inside back cover.

To Be Replaced	ECG Replacement
AFY42	160
AFZ11	160
AFZ12	160
AFZ23	100
AG6	188
AG30	177
AG100D	116
AG100G	116
AG100J	116
AG134	126
AGH-001	1212
AGH001	1212
AGH-002	1212
AGH002	1212
AGH-003	1148
AH14	125
AH394-40-0951	125
AH805	125
AH810	125
AH815	125
AH1005	125
AH1010	125
AH1015	125
AHT800031C0	229
AIE	161
AJ5	116
AJ10	116
AJ15	116
AJ20	116
AJ25	116
AJ30	116
AJ-30	116
AJ35	116
AJ40	116
AJ50	116
AJ60	116
AJ103	179
AL100	127
AL101	121
AL102	127
AL103	127
AL113	179
AL210	160
ALB6494612	196
ALC1	113
ALC1A	113
ALC-1A	178MP
ALCI	113
ALD-35	123A
ALD-3141	123A
ALS-8922	123A
ALZ10	100
AM005	116
AM010	116
AM-010	116
AM020	116
AM-020	116
AM025	116
AM-025	116
AM030	116
AM-030	116
AM035	116
AM-035	116
AM040	116
AM050	116
AM060	116
AM-060	116
AM1	5830
AM2	5830
AM3	116
AM4	5830
AM5	5830
AM-6-5	116
AM9LS298PC	74LS298
AM11	5832
AM12	5832
AM13	116
AM21	5834
AM22	5834
AM-22	116
AM23	116
AM24	5834
AM31	5836
AM32	5836
AM-33	116
AM33	116
AM34	5836
AM41	5838
AM42	5838
AM43	116
AM44	5838
AM51	5840
AM52	5840
AM53	116
AM54	5840
AM63	116
AM64	5842
AM65	116
AM66	116
AM74LS138	74LS138
AM74LS151	74LS151
AM74LS153	74LS153
AM74LS157	74LS157
AM74LS161	74LS161A
AM74LS163	74LS163A
AM74LS174	74LS174
AM74LS175	74LS175
AM74LS191	74LS191
AM74LS193	74LS193
AM74LS195A	74LS195A
AM74LS240	74LS240
AM74LS241	74LS241
AM74LS253	74LS253
AM74LS257	74LS257
AM74LS273	74LS273

To Be Replaced	ECG Replacement
AM74LS377	74LS377
AM224D	987
AM300	177
AM300A	177
AM301	177
AM301A	177
AM302	177
AM302A	177
AM303	177
AM303A	177
AM304	177
AM304A	177
AM305	177
AM305A	177
AM306	177
AM306A	177
AM307	177
AM307A	177
AM308	177
AM308A	177
AM324D	987
AM324N	987
AM405	116
AM410	116
AM415	116
AM420	116
AM425	116
AM430	116
AM435	116
AM440	116
AM445	116
AM450	116
AM460	116
AM620	177
AM620A	177
AM626	177
AM626A	177
AM632	177
AM632A	177
AM741CT	941
AM748CT	1171
AM3235	130
AM-G-5	116
AM-G-5A	125
AM-G-5C	125
AM-G-10	116
AM-G-11	170
AM-G-22	116
AM-G22	116
AMD746	790
AMD780	714
AMD781	715
AMF104	130
AMF105	130
AMF106	163A
AMF115	130
AMF116	130
AMF117	130
AMF117A	130
AMF118	130
AMF118A	130
AMF119	130
AMF119A	130
AMF120	130
AMF120A	130
AMF-121	130
AMF201	130
AMF201B	181
AMF201C	181
AMF210	130
AMF210A	130
AMF210B	181
AMLM201	1171
AMLM201A	1171
AMLM301	1171
AMLM301A	1171
AMP2919-2	130
AMP2970-2	129
AMP-2971-4	128
AMU5B7741393	941
AMU5B7747393	947
AMU5R7723393	923
AMU6A7723393	923D
AMU6A7741393	941D
AN	123A
AN0153	288
AN-1	116
AN103	1192
AN103G	1192
AN136	1053
AN155	147A
AN203	1054
AN203AA	1054
AN203BA	1054
AN203BB	1054
AN203C	1054
AN-206	1057
AN206	1057
AN206AB	1057
AN206B	1057
AN206S	1057
AN208	1136
AN208LL	1136
AN210	1055
AN210A	1055
AN210B	1055
AN210C	1055
AN210D	1055
AN211	1056
AN211A	1056
AN211-A	1056
AN211AB	1056
AN211-AB	1056
AN211B	1056
AN211-B	1056

To Be Replaced	ECG Replacement
AN213	1059
AN213AB	1059
AN214	1058
AN214P	1058
AN-214P	1058
AN214PQR	1058
AN214-PQR	1058
AN214PR	1058
AN214Q	1058
AN-214Q	1058
AN214-Q	1058
AN214QR	1058
AN214R	1058
AN214-R	1058
AN216	1125
AN217	1060
AN217AA	1060
AN217AB	1060
AN217B	1060
AN217BA	1060
AN217BB	1060
AN217CA	1060
AN217CB	1060
AN220	1061
AN221	712
AN225	1062
AN227	1063
AN228	1065
AN228W	1065
AN229	1064
AN230	1065
AN231	1066
AN234	1067
AN236	1123
AN238	749
AN238S	749
AN239	1161
AN239B	1161
AN239Q	1161
AN239QA	1161
AN239QB	1161
AN-240	712
AN240	712
AN240D	712
AN240P	712
AN240S	712
AN241	1162
AN241D	1162
AN242	1068
AN245	1164
AN246	1164
AN247	1173
AN247P	1173
AN253	1072
AN253AB	1072
AN253B	1072
AN253BB	1072
AN260	1074
AN262	1263
AN271	1181
AN271A	1181
AN271B	1181
AN274	1137
AN277	1073
AN277A	1073
AN277-A	1073
AN277-AB	1073
AN277AB	1073
AN277B	1073
AN277-B	1073
AN277BA	1073
AN288	1069
AN289	1182
AN302	1264
AN303	1265
AN305	1266
AN315	1240
AN316	1267
AN318	1268
AN326	1250
AN328	1070
AN331	1168
AN337	1269
AN342	1071
AN343	1163
AN360	1223
AN362	1248
AN366	1242
AN374	1224
AN377	788
AN380	1191
AN612	1249
AN640	1270
AN2390A	1161
AN-G5B	125
AN-G-5B	116
AND101RG	3016
AND103G	3014
AND104R	3012
AND105G	3015
AND105R	3013
ANJ101	159
AO1	126
AO7	101
AO4093-X	506
AO4230-A	506
AO4241-A	506
APB-11A-1008	102A
APB-11H-1001	160
APB-11H-1004	160
APB-11H-1007	126
APB-11H-1008	102
APB-11H-1010	102A
APS-AH1	501A
AQ2	128

To Be Replaced	ECG Replacement
AQ2(Philco)	116
AQ3	128
AQ3(Philco)	116
AQ4	123
AQ5	128
AQ6	123
AR4	104
AR-4	121
AR5	104
AR-5	121
AR6	104
AR-6	121
AR7	104
AR-7	121
AR7C	116
AR8	121
AR-8	121
AR8P404R	121
AR9	121
AR-9	121
AR10	121
AR-10	121
AR11	121
AR-11	121
AR12	121
AR-12	121
AR13	121
AR-13	121
AR14	121
AR-14	121
AR15	130
AR-15	124
AR15-L8-0026	130
AR16	116
AR17	116
AR-17	152
AR17A	175
AR17B	175
AR17(Grey)	152
AR17 (Philco)	175
AR17(Transistor)	152
AR-18	124
AR18	116
AR18(Diode)	116
AR18 (Philco)	175
AR19	116
AR20	116
AR21	116
AR22	116
AR22(Philco)	182
AR22(rectifier)	116
AR22(transistor)	184
AR23	125
AR23(Philco)	183
AR23(rectifier)	5808
AR23(transistor)	185
AR23(Transistor)	153
AR24	125
AR24(FORD)	196
AR24(Philco)	186
AR24(rectifier)	5808
AR24(Red)	196
AR24(transistor)	184
AR-25	153
AR25	187
AR25G	187
AR25(Green)	153
AR25(Orange)	108
AR25(White)	108
AR26	211
AR27	197
AR27(Green)	153
AR28	196
AR28(Red)	196
AR29	211
AR30	196
AR-30	153
AR35	196
AR37	197
AR37(Green)	153
AR38	196
AR38(Red)	196
AR43	153
AR44	153
AR102	158
AR-102	102A
AR103	160
AR-103	102A
AR104	160
AR-104	102A
AR105	160
AR-105	102A
AR107	123A
AR-107	123A
AR108	123A
AR-108	123A
AR111	161
AR-200	123A
AR200	108
AR200(Green)	107
AR200W	108
AR-201	123A
AR201	108
AR201Y	108
AR201(Yellow)	108
AR202	108
AR-202	123A
AR202G	108
AR202(Green)	108
AR203	128
AR203R	128
AR203(Red)	128
AR204	123A
AR205	123A
AR206	123A

To Be Replaced	ECG Replacement
AR207	192
AR208	123A
AR209	161
AR210	161
AR211	161
AR212	108
AR213	161
AR213V	161
AR213(Violet)	161
AR218	229
AR218(Orange)	161
AR218(Red)	161
AR218RO	161
AR219	161
AR219YY	107
AR220	161
AR220GY	107
AR220(Yellow)	107
AR221	108
AR222	161
AR222(Blue)	107
AR222BY	107
AR222(Yellow)	107
AR223	159
AR224	107
AR224(White)	107
AR224(Yellow)	107
AR304	129
AR304(Green)	159
AR304(Red)	129
AR306	123A
AR306(Blue)	123A
AR306(Orange)	123A
AR308	129
AR308(Violet)	159
AR313	108
AR410	6402
AR501	222
AR502	222
AS-2	116
AS2	116
AS-3	116
AS3	116
AS3A	5800
AS3B	5801
AS3C	5802
AS3D	5804
AS3E	5806
AS3F	5808
AS-4	116
AS4	116
AS-5	116
AS5	116
AS6	116
AS11	116
AS-14	116
AS14	116
AS-15	116
AS15	116
AS215	121
AS477	176
AS3428	101
AS33867	102A
AS33868	102A
AS34280	160
ASL802001-1	912
ASY12-1	158
ASY12-2	158
ASY13-1	158
ASY13-2	158
ASY14	158
ASY14-1	158
ASY14-2	158
ASY14-3	158
ASY24	102A
ASY-24	160
ASY26	100
ASY-26	100
ASY27	100
ASY-27	100
ASY28	101
ASY29	101
ASY30	126
ASY31	102A
ASY32	102A
ASY48	102A
ASY48-IV	102A
ASY48-V	102A
ASY48-VI	102A
ASY49	102A
ASY50	102A
ASY51	102A
ASY52	102A
ASY53	101
ASY54	102A
ASY55	102A
ASY56	102A
ASY57	126
ASY58	126
ASY59	126
ASY61	103A
ASY62	103A
ASY-62	101
ASY63	160
ASY67	160
ASY70	102A
ASY70-IV	102A
ASY70IV	158
ASY70V	158
ASY70-V	102A
ASY70-VI	102A
ASY70VI	158
ASY71	158
ASY72	101
ASY-72	101

To Be Replaced	ECG Replacement
ASY73	101
ASY74	101
ASY75	101
ASY76	100
ASY77	100
ASY80	100
ASY81	176
ASY86	101
ASY87	101
ASY88	101
ASY89	101
ASY90	102A
ASY91	102A
ASZ10	126
ASZ11	126
ASZ15	121
ASZ16	121
ASZ17	121
ASZ18	121
ASZ20	160
ASZ20N	160
ASZ21	160
ASZ30	126
AT-1	160
AT-2	160
AT-3	160
AT-4	160
AT4	160
AT-5	100
AT5	160
AT6	102A
AT-6	160
AT6A	102A
AT-6A	102A
AT-7	128
AT7	192
AT-8	160
AT-9	160
AT-10	130
AT10H	102A
AT10M	102A
AT10N	102A
AT-11	159
AT-12	128
AT12	128
AT-12(PHILCO)	128
AT13	160
AT14	160
AT-14	160
AT15	160
AT-15	100
AT16	160
AT17	160
AT20H	102A
AT20M	102A
AT20N	102A
AT30H	102A
AT30M	102A
AT30N	102A
AT50	102A
AT-50	102A
AT52	101
AT53	101
AT71	101
AT72	101
AT73R	101
AT74	102A
AT74S	102A
AT75R	101
AT76R	101
AT77	101
AT100H	102A
AT100M	102A
AT100N	102A
AT200	127
AT310	107
AT311	107
AT312	107
AT313	107
AT314	107
AT315	107
AT316	107
AT318	107
AT319	107
AT321	107
AT322	107
AT323	107
AT324	107
AT325	107
AT326	107
AT327	107
AT328	107
AT329	123A
AT330	107
AT331	159
AT331A	159
AT332	159
AT332A	159
AT333	159
AT335	123A
AT335A	159
AT336	123A
AT337	123A
AT338	107
AT339	128
AT340	161
AT341	161
AT342	161
AT343	161
AT344	161
AT345	161
AT346	161
AT347	123A
AT348	123A
AT349	123A

To Be Replaced	ECG Replacement
AT350	154
AT351	154
AT370	123A
AT380	128
AT381	128
AT382	128
AT383	128
AT384	128
AT385	128
AT386	128
AT387	128
AT388	128
AT391	129
AT392	129
AT393	129
AT394	129
AT395	129
AT396	129
AT397	129
AT398	129
AT400	123A
AT401	123A
AT402	123A
AT403	123A
AT404	123A
AT405	123A
AT406	123A
AT407	123A
AT410	159
AT410-1	159
AT412	159
AT412-1	159
AT413	159
AT413-1	159
AT414	159
AT414-1	159
AT415	159
AT415-1	159
AT416	159
AT416-1	159
AT417	159
AT417-1	159
AT418	159
AT418-1	159
AT419	159
AT419-1	159
AT420	123A
AT421	123A
AT422	123A
AT423	123A
AT424	123A
AT425	123A
AT426	123A
AT427	123A
AT430	159
AT430-1	159
AT431	159
AT431-1	159
AT432	159
AT432-1	159
AT433	159
AT433-1	159
AT434	159
AT434-1	159
AT435	159
AT435-1	159
AT436	159
AT436-1	159
AT437	159
AT437-1	159
AT438	159
AT438-1	159
AT440	128
AT441	128
AT442	128
AT443	128
AT444	128
AT445	128
AT446	128
AT451	159
AT451-1	159
AT452	159
AT452-1	159
AT453	159
AT453-1	159
AT454	159
AT454-1	159
AT455	159
AT455-1	159
AT460	129
AT461	129
AT462	129
AT463	129
AT464	129
AT465	129
AT466	129
AT467	129
AT468	129
AT470	128
AT471	128
AT472	128
AT473	128
AT474	128
AT475	128
AT476	128
AT477	128
AT478	128
AT479	128
AT480	129
AT481	129
AT482	129
AT483	129
AT484	129
AT485	129
AT490	123A

To Be Replaced	ECG Replacement
AT491	123A
AT492	123A
AT493	123A
AT494	123A
AT495	123A
AT520	108
AT521	101
AT551	101
AT874	102A
AT1138	179
AT1138A	179
AT1138B	179
AT1833	179
AT1834	179
AT1856	130
AT-1856	130
AT2848	129
AT3260	130
AT5156	129
AT/RF1	160
AT/RF2	160
AT/S13	160
ATAF1	102A
ATAF2	102A
ATC-SR-3	156
ATC-TR-4	128
ATC-TR-5	121
ATC-TR-6	121
ATC-TR-7	128
ATC-TR-13	128
ATC-TR-14	121
ATC-TR-15	130
ATC-TR-19	152
ATD0325XCC	152
ATGP	102A
ATRF1	126
ATRF2	126
ATS13	126
AU100N	158
AU101	127
AU102	121
AU103	127
AU104	127
AU105	127
AU106	127
AU107	127
AU108	127
AU110	127
AU111	127
AU112	127
AU113	127
AU2012	142A
AUY10	121
AUY19	121
AUY20	121
AUY21	104
AUY-21	121
AUY21A	121
AUY22	104
AUY22A	121
AUY28	127
AUY29	179
AUY31	121
AUY33	121
AUY37	179
AUY38	127
AV0000105-0	177
AV01-07	141A
AV5	142A
AV10	147A
AV104(Zener)	5186A
AV105	121
AV105(Zener)	5188A
AV107(Zener)	5194A
AV110	5203A
AV116	5220A
AV2012	142A
AV2015	145A
AV-2015	145A
AV2027	146A
AV2027A	146A
AV2033	147A
AV2055	148A
AV2062	149A
AV2082	150A
AV2110	151A
AV8015(Zener)	5191A
AV8018(Zener)	5194A
AV8022(Zener)	5197A
AV8027	5200A
AV8056	5212A
AV8082	5217A
AVC133	147A
AW01-0	5070A
AW01-06	5070A
AW-01-07	5071A
AW01-08	5072A
AW-01-08	5072A
AW01-08	5072A
AW01-08J	5072A
AW01-09	139A
AW-01-09	139A
Aw-01-09	139A
AW01-7	5071A
AW01-9	139A
AW01-9/CP3112030	139A
AW01-9V	139A
AW-01-10	140A
AW01-10	140A
AW01-11	5074A
AW-01-12	142A
AW01-12C	142A
AW-01-12C	142A
AW01-12V	142A
AW01-13	5022A

To Be Replaced	ECG Replacement
AW01-15	145A
AW01-16	5075A
AW01-18	5077A
AW01-20	5079A
AW01-22	5080A
AW01-24	5081A
AW01-27	146A
AW01-30	5084A
AW01-33	147A
AW-01-33	147A
AW01(RCA)	143A
AW09	139A
AW0110	140A
AW0122	5080A
AW-0133	147A
AW91-08	5072A
AWH-24	123A
AWO1-33	147A
AWO9	139A
AWOL-13	5022A
AX12	142A
AX91770	108
AY102	516
AYY10-120	5852
AZ-050	135A
AZ-052	136A
AZ-054	136A
AZ-056	136A
AZ-058	5070A
AZ-061	137A
AZ-063	137A
AZ-065	5071A
AZ-067	5071A
AZ-069	5071A
AZ-071	138A
AZ-073	138A
AZ-075	138A
AZ-077	5072A
AZ-079	5072A
AZ-081	5072A
AZ-083	5072A
AZ-085	5073A
AZ-088	5073A
AZ-090	139A
AZ-092	139A
AZ-094	140A
AZ-096	140A
AZ-098	140A
AZ3.3	5066A
AZ3.6	134A
AZ3.9	5067A
AZ4.3	5068A
AZ4.7	5069A
AZ5.1	135A
AZ5.6	136A
AZ6.2	137A
AZ6.8	5071A
AZ7	144A
AZ7.5	138A
AZ8.2	5072A
AZ9.1	139A
AZ10	140A
AZ11	5074A
AZ12	142A
AZ13	143A
AZ15	145A
AZ-15	145A
AZ18	5027A
AZ22	5030A
AZ27	146A
AZ27A	146A
AZ-100	140A
AZ-105	5074A
AZ-110	5074A
AZ-115	141A
AZ-120	142A
AZ-125	143A
AZ-130	143A
AZ-135	144A
AZ-140	144A
AZ-145	145A
AZ-150	145A
AZ-157	5075A
AZ-162	5075A
AZ-167	5076A
AZ-172	5076A
AZ-177	5077A
AZ-182	5077A
AZ-187	5078A
AZ-192	5078A
AZ-197	5079A
AZ746	5005A
AZ746A	5066A
AZ747	5006A
AZ747A	134A
AZ748	5007A
AZ748A	5067A
AZ749	5008A
AZ749A	5068A
AZ750	5009A
AZ750A	5069A
AZ751	5010A
AZ751A	5010A
AZ752	5011A
AZ752A	136A
AZ753	5013A
AZ753A	137A
AZ754	5014A
AZ754A	5071A
AZ755	5015A
AZ755A	138A
AZ756	5016A
AZ756A	5072A
AZ757	5018A
AZ757A	139A

To Be Replaced	ECG Replacement
AZ758	5019A
AZ758A	140A
AZ759	5021A
AZ759A	142A
AZ957	5014A
AZ957A	5014A
AZ957B	5071A
AZ958	5015A
AZ958A	5015A
AZ958B	138A
AZ959	5016A
AZ959A	5016A
AZ959B	5072A
AZ960	5018A
AZ960A	5018A
AZ960B	139A
AZ961	5019A
AZ961A	5019A
AZ961B	140A
AZ962	5020A
AZ962A	5020A
AZ962B	5074A
AZ963	5021A
AZ963A	5021A
AZ963B	142A
AZ964	5022A
AZ964A	5022A
AZ964B	143A
AZ965	5024A
AZ965A	5024A
AZ965B	145A
AZ966	5025A
AZ966A	5025A
AZ966B	5075A
AZ967	5027A
AZ967A	5027A
AZ967B	5077A
AZ968	5029A
AZ968A	5029A
AZ968B	5079A
AZ969	5030A
AZ969A	5030A
AZ969B	5080A
AZ970	5031A
AZ970A	5031A
AZ970B	5081A
AZ971	5033A
AZ971A	5033A
AZ971B	146A
AZ972	5035A
AZ972A	5035A
AZ972B	5084A
AZ973	5036A
AZ973A	5036A
AZ973B	147A
AZ974	5037A
AZ974A	5037A
AZ974B	5085A
AZ975	5038A
AZ975A	5038A
AZ975B	5086A
AZ976	5039A
AZ976A	5039A
AZ976B	5087A
AZQQ001GEA	1165
AZQQ-001GEA	1165
AZY	107
B00	7442
B0075660	7473
B01	7475
B01-02	5074A
B02	7476
B03	74H76
B06C	116
B071	138A
B090	139A
B094	140A
B0102	116
B0301-049	181
B02022	5455
B02023	5455
B02025	5457
B02026	5457
B02610	5452
B02611	5453
B02612	5454
B02644	5452
B02645	5453
B02646	5454
B03002	5455
B03003	5455
B03005	5457
B03006	5457
B03604	5452
B03605	5453
B03606	5454
B03641	5452
B03642	5453
B03643	5454
B048010	1208
B0305401	1235
B0306000	1004
B0306004	1004
B0311400	1128
B0311402	1128
B0313300	1134
B0313400	1133
B0313600	1131
B0313700	1132
B0313800	1130
B0315500	1200
B0316403	1236
B0319200	1155
B0480800	1207
B0480810	1208

To Be Replaced	ECG Replacement
B0480820	1197
B1-8.2	5072A
B1A	182
B1A1	116
B1A5	116
B1A9	116
B1B	116
B1B1	116
B1B5	116
B1B9	116
B1C	184
B1C1	116
B1C-1	184
B1C-2	184
B1C5	116
B1C9	116
B1D	152
B1D1	116
B1D-1	184
B1D5	116
B1D9	116
B1E	191
B1E1	116
B1E-1	191
B1E1(Quasar)	191
B1E5	116
B1E9	116
B1E(Quasar)	191
B1F	184
B1F1	116
B1F5	116
B1F9	116
B1G	191
B1G1	116
B1G5	116
B1G9	116
B1H	161
B1H1	125
B1H5	125
B1H9	125
B1J	159
B1K	123A
B1K1	125
B1K5	125
B1K9	125
B1M	188
B1M1	125
B1M5	125
B1M9	125
B1N	123A
B1N-1	159
B1N-2	159
B1P	163A
B1P-1	163A
B1P7201	123A
B1R	247
B1T	283
B1U	241
B1U148	184
B1V	286
B1W	123A
B1Y	286
B1Z	175
B2A	159
B2A1	116
B2A5	116
B2A9	116
B2B	175
B2B1	116
B2B5	116
B2B9	116
B2C1	116
B2C5	116
B2C9	116
B2D	123A
B2D1	116
B2D5	116
B2D9	116
B2E	159
B2E1	116
B2E5	116
B2E9	116
B2F1	116
B2F5	116
B2F9	116
B2G	159
B2G1	116
B2G5	116
B2G9	116
B2H	162
B2H1	125
B2H5	125
B2H9	125
B2J	184
B2K	186
B2K1	125
B2K5	125
B2K9	125
B2L	283
B2M	188
B2M1	125
B2M-1	159
B2M-2	159
B2M-3	159
B2M5	125
B2M9	125
B2P	286
B2S	159
B2SB241	104
B2SB244	104
B2W	121
B2Y	159
B2Z	107
B3-28	346
B3A1	116

To Be Replaced	ECG Replacement
B3A5	116
B3A9	116
B3B1	116
B3B5	116
B3B9	116
B3C1	116
B3C5	116
B3C9	116
B3D1	116
B3D5	116
B3D9	116
B3E1	116
B3E5	116
B3E9	116
B3F1	116
B3F5	116
B3F9	116
B3G1	116
B3G5	116
B3G9	116
B3H1	125
B3H5	125
B3H9	125
B3K5	125
B3K9	125
B3M1	125
B3M5	125
B3M9	125
B3N1	506
B3N5	506
B3N9	506
B-3P	109
B4A1	116
B4A-1-A-21	121
B4A5	116
B4A9	116
B4B1	116
B4B5	116
B4B9	116
B4C1	116
B4C5	116
B4C9	116
B4D1	116
B4D5	116
B4D9	116
B4E1	116
B4E5	116
B4E9	116
B4F1	116
B4F5	116
B4F9	116
B4G1	116
B4G5	116
B4G9	116
B4H1	125
B4H5	125
B4H9	125
B4K1	125
B4K5	125
B4K9	125
B4M1	125
B4M5	125
B4M9	125
B5	102A
B-5	176
B5-31S	5400
B5A	102A
B5A1	116
B5A5	116
B5A9	116
B5A(Horizontal)	165
B5A(Motorola)	165
B5A(Quasar)	165
B5B1	116
B5B5	116
B5B9	116
B5C	175
B5C1	116
B5C5	116
B5C9	116
B5D	154
B5D1	116
B5D5	116
B5D9	116
B5E	196
B5E1	116
B5E5	116
B5E9	116
B5F	291
B5F1	116
B5F5	116
B5F9	116
B5G	124
B5G1	116
B5G5	116
B5G9	116
B5H1	125
B5H5	125
B5H9	125
B5J	123A
B5K1	125
B5K5	125
B5K9	125
B5M1	125
B5M5	125
B5M9	125
B5P	191
B6A1	156
B6A5	156
B6A9	156
B6B1	156
B6B-3A21	121MP
B6B-3-A-21	121MP
B6B5	156
B6B9	156

To Be Replaced	ECG Replacement
B6C1	156
B6C5	156
B6C9	156
B6D1	156
B6D5	156
B6D9	156
B6E1	156
B6E5	156
B6E9	156
B6F1	156
B6F5	156
B6F9	156
B6G1	156
B6G5	156
B6G9	156
B6H1	156
B6H5	156
B6H9	156
B6K1	156
B6K5	156
B6K9	156
B6M1	156
B6M5	156
B6M9	156
B6N1	506
B6N5	506
B6N9	506
B7A1	156
B7A5	156
B7A9	156
B7B1	156
B7B5	156
B7B9	156
B7C1	156
B7C5	156
B7C9	156
B7D1	156
B7D5	156
B7D9	156
B7E1	156
B7E5	156
B7E9	156
B7F1	156
B7F5	156
B7F9	156
B7G1	156
B7G5	156
B7G9	156
B7H1	156
B7H5	156
B7H9	156
B7K1	156
B7K5	156
B7K9	156
B7M1	156
B7M5	156
B7M9	156
B7N1	506
B7N5	506
B7N9	506
B8P-2A21	102A
B8P-2-A-21	102A
B9L-4A21	102A
B9L-4-A-21	102A
B10A	5322
B10B	5322
B10D	5324
B10F	5326
B10Z	5322
B12-1A21	123A
B12-1-A-21	123A
B12-28	357
B14A-1-21	121
B15-12	350
B16A	105
B17A	105
B18A	105
B19	104
B20	104
B21	104
B22	102A
B22-3	102A
B-22-3	102A
B22•4	102A
B-22-4	102A
B22A	102A
B22B	102A
B22H	102A
B22I	102A
B22R	102A
B22Y	102A
B23	102A
B-23	102A
B23-1	102A
B-23-1	102A
B23-2	102A
B-23-2	102A
B23-79	197
B23-82	196
B24	102A
B24-06B	125
B24-06C	506
B24-06D	506
B24-1	102A
B-24-1	102A
B25	121
B25-12	351
B25-28	359
B25B	121
B-26	102A
B26	104
B-26-1	102A
B26A	104
B26(Japan)	104
B27	104

To Be Replaced	ECG Replacement
B28	109
B-28	109
B28(Japan)	104
B29	104
B30	109
B-30	109
B30-12	351
B30C50KP	167
B30C250	116
B30C250-1	116
B30C250KP	167
B30C350-1	116
B30C500	116
B30C600	116
B30C600CB	116
B30C1000	166
B30(Japan)	104
B-30P	109
B31	116
B-31	116
B31(rectifier)	116
B31(transistor)	104
B32	102A
B32-0	102A
B32-1	102A
B32-2	102A
B32-4	102A
B32N	102A
B33	102A
B33-4	102A
B33C	102A
B33D	102A
B33E	102A
B33F	102A
B34	102
B34N	102
B35C600	116
B37	102A
B37A	102A
B37B	102A
B37C	102A
B37E	102A
B37F	102A
B38	102
B39	102A
B40	102A
B40-12	320
B40-28	360
B41	104
B42	104
B43	102A
B43A	102A
B44	102A
B46	102A
B46-110	113
B-46-110	178MP
B47	102A
B48	102
B49	102A
B50	102
B51	160
B51(Japan)	102
B52	102
B53	102
B54	102A
B54B	102A
B54E	102A
B54F	102A
B54Y	102A
B55(Transistor)	102A
B56	102A
B56-15	5802
B56-33	5801
B56A	102A
B56B	102A
B56C	102A
B57	102A
B58	158
B59	102A
B60	102A
B60A	102A
B60C300	116(4)
B61	102A
B62	104
B63	131
B64	121
B65	102A
B65-1A21	160
B65-1-A-21	160
B65-2A21	103A
B65-2-A-21	103A
B65-4A21	101
B65-4-A-21	101
B65A-1-21	160
B65B-1-21	160
B65C-1-21	121
B66	102A
B66-1A21	102A
B66-1-A-21	102A
B66-2A21	102A
B66-2-A-21	102A
B66-3A21	102A
B66-3-A-21	102A
B66H	102A
B66X0035-001	118
B66X0036-001	119
B66X0040-001	142A
B66X0040-002	5079A
B66X0040-003	139A
B66X0040-004	5141A
B66X0040-005	140A
B66X0040-006	130
B66X0040-007	5081A
B66X0040-008	5100A
B66X0041-001	120

To Be Replaced	ECG Replacement
B67	102A
B67A	102A
B69	121
B71	102
B72	102
B73	102A
B73A	102A
B73B	102A
B73C	102A
B73GR	102A
B74	160
B74-3A21	100
B74-3-A-21	100
B75	102A
B75A	100
B75AH	102A
B75B	102A
B75C	102A
B75F	102A
B75H	102A
B75LB	102A
B76	102A
B77	102A
B77A	102A
B77A-1-21	105
B77AA	102A
B77AB	102A
B77AC	102A
B77AD	102A
B77AH	102A
B77AP	102A
B77B	102A
B77(B)	102A
B77B-1-21	121
B77B-11	102A
B77C	102A
B77C-1-21	121MP
B77D	102A
B77D0016-1	5675
B77H	102A
B77T0049	9914
B77V	102A
B77VRED	102A
B78	102A
B79	102A
B80	121
B81	121
B82	121
B83	104
B83-7	5697
B84	121
B84A-1-21	121
B85	102
B87	102
B87J0007	128
B88B-1-21	160
B88C-1-21	100
B89	102A
B89A	102A
B89AH	102A
B89H	102A
B90	102A
B91	102A
B92	102
B92-1A21	105
B92-1-A-21	101
B94	102A
B95	102
B97	102A
B98	102
B100	102
B100(Zener)	140A
B101	102
B102	102
B103	100
B104	100
B105	158
B106	158
B107	121
B107A	121
B108	158
B108A	158
B108B	158
B109	158
B110(Transistor)	102A
B111	102A
B111K	102A
B112	102A
B113	102A
B114	102A
B115	102A
B116	102A
B117	102A
B117K	102A
B119	121
B119A	121
B120	102A
B122	121
B123	104
B123A	104
B124	121
B126	121
B126A	121
B126F	121
B126V	121
B127	121
B127A	121
B128	121
B128A	121
B128V	121
B129	121
B130	131
B130A	131
B131	152
B131A	121

To Be Replaced	ECG Replacement
B131(Japan)	121
B132	153
B132A	121
B132(Japan)	121
B134	121
B134A	121
B134C	121
B134-D	102A
B134-E	102A
B134(Japan)	102A
B135	102A
B135B	102A
B135C	102A
B135E	102A
B136	102A
B136-2	102A
B136-3	102A
B136A	102A
B136B	102A
B136C	102A
B136U	102A
B137	121
B138	121
B140	144A
B141	104
B142	104
B142B	104
B142C	104
B143	104
B143P	104
B144	104
B144P	104
B145	104
B146	104
B147	104
B149	104
B149	104
B151(Transistor)	104
B152(Transistor)	104
B153	102
B154	102
B155	102A
B155A	102A
B155B	102A
B156	102A
B156A	102A
B156AA	102A
B156AB	102A
B156AC	102A
B156B	102A
B156BC	102A
B156C	102A
B156D	102A
B156P	102A
B157	102A
B158	102A
B159	102A
B160	102A
B161	102
B162	102
B163	102
B164	102
B165	102
B166	102
B167	158
B168	102A
B169	123A
B-169	123A
B169(Japan)	123A
B170	102A
B171	158
B171A	158
B171B	158
B171(Japan)	102A
B172	158
B172-5	156
B172-10	156
B172-20	156
B172-30	156
B172-40	156
B172-50	156
B172-60	156
B172-70	156
B172-80	156
B172-90	156
B172-100	156
B172A	158
B172AF	158
B172B	158
B172C	158
B172D	158
B172E	158
B172F	158
B172H	158
B172P	158
B172R	158
B173	102A
B173A	102A
B173B	102A
B173C	102A
B173L	102A
B174	102A
B175	158
B175A	158
B175B	158
B175C	158
B175E	158
B176	102A
B176B	102A
B176M	102A
B176-O	102A
B176-P	102A
B176P	102A
B176-PR	102A
B176PRC	102A

To Be Replaced	ECG Replacement
B176R	102A
B177	121
B177(Japan)	102A
B178	102A
B178A	102A
B178C	102A
B178D	102A
B178(Japan)	102A
B178M	102A
B178N	102A
B178-O	102A
B178-S	102A
B178T	102A
B178U	102A
B178V	102A
B178X	102A
B178Y	102A
B179	121
B180	158
B180A	158
B181	158
B181A	158
B183	102A
B184	102A
B185	102A
B185(0)	102A
B185AA	102A
B185F	102A
B185(0)	102A
B185P	102A
B186	102A
B186(0)	102A
B186-1	102A
B186A	102A
B186AG	102A
B186B	102A
B186BY	102A
B186C	102A
B186G	102A
B186H	102A
B186-K	102A
B186L	102A
B186 (Sanyo)	102A
B186Y	102A
B187	102A
B187(1)	102A
B187AA	102A
B187B	102A
B187C	102A
B187D	102A
B187G	102A
B187K	102A
B187R	102A
B187RED	102A
B187S	102A
B187 (Sanyo)	102A
B187Y	102A
B187YEL	102A
B188	102A
B189	102A & 410
B191-5	5940
B196	5635
B199	102
B200	102
B200A	102
B200C40	116
B201	102A
B202	102
B203AA	102
B204	179
B205	179
B206	179
B215	121
B216	121
B216A	121
B217	121
B217A	121
B217G	121
B217U	121
B218	102
B219	102
B220	102
B220A	102
B221	102
B221A	102
B222	102
B223	102
B223-10	156
B223-20	525
B223-30	156
B223-40	156
B223-50	156
B223-60	156
B224	121
B224(Japan)	102
B225	102
B226	102
B227	102
B228	104
B229	121
B230	104
B231	127
B232	127
B233	104
B234	127
B234N	127
B235	105
B235A	105
B236	105
B237	105
B237-12A	105
B237-12B	105
B238	158
B238-12A	158
B238-12B	158

To Be Replaced	ECG Replacement
B238-12C	158
B239	121
B239A	121
B240	160
B240A	160
B241	102
B246	104
B247	121
B248	121
B248A	121
B249	104
B249A	104
B250	104
B250A	104
B250C7K4S	116
B250C75	116
B250C75K4	116
B250C75K5	116
B250C75K41	116
B250C75K45	116
B250C100	116
B250C100TD	116
B250C125	116
B250C125K4	116
B250C125N2	116
B250C125X4	116
B250C150	116
B250C150K4	116
B251	127
B251A	127
B252	127
B252A	127
B253	127
B253A	127
B254	104
B255	104
B256	104
B257	102
B258	105
B259	105
B260	105
B261	102A
B262	102A
B263	102A
B264	102A
B265	102A
B266	102A
B266A-1	159
B266B-1	159
B266P	102A
B266Q	102A
B267	102A
B268	102A
B269	102A
B269-3345	519
B270	102A
B270A	102A
B270B	102A
B270C	102A
B270D	102A
B270E	102A
B271	102A
B-271	541
B272	102A
B273	102A
B274(Japan)	127
B274(Sylvania)	128
B275	127
B276	127
B282	121
B283	121
B284	121
B285	121
B-288	548
B290	100
B291	100
B292	100
B292A	100
B293	102A
B294(rectifier)	116
B294(transistor)	102A
B295	121
B296	127
B-298	541
B299	102A
B300	127
B301	127
B302	102A
B303-0	102A
B303A	102A
B303B	102A
B303C	102A
B303H	102A
B303K	102A
B303(Transistor)	102A
B304	158
B304A	158
B309	127
B310	127
B310(Zener)	5085A
B311	127
B312	127
B313	127
B314	100
B315	102A
B-315-1	158
B316	102A
B317	102A
B318	127
B319	127
B320	127
B321	102A
B322	102A
B323	102A
B324	158

To Be Replaced	ECG Replacement
B-324	158
B324A	158
B324B	158
B324D	158
B324E	158
B324E-1	158
B324F	158
B324G	158
B324GHI	102A
B324H	158
B324I	158
B324J	158
B324K	158
B324L	158
B324N	158
B324P	158
B324R	158
B324S	158
B324V	158
B326	102
B327	102
B328	102
B329	102A
B329K	102A
B331	213
B331H	213
B331HA	213
B331HB	213
B331HC	213
B332	213
B332H	213
B332HA	213
B332HB	213
B332HC	213
B333	213
B335	102
B336	102A
B337	121
B337A	121
B337B	121
B337BK	121
B337H	121
B337HA	121
B337HB	121
B338	121
B338H	121
B338HA	121
B338HB	121
B339	179
B339H	179
B340	179
B340H	179
B341	127
B341H	127
B341V	127
B342	127
B343	127
B345	102A
B345S	5400
B346	102A
B346K	102A
B346Q	102A
B347	102
B348	102A
B348Q	102A
B348R	102A
B349	102A
B350	102
B351	105
B352	294
B352D	294
B353	105
B354	105
B355	104
B356	104
B357	127
B358	127
B359	127
B360	127
B361	127
B362	127
B364	102A & 410
B365	158
B365B	158
B366	102A
B367	131
B367A	131
B367(A)	131
B367B	131
B367C	131
B367H	131
B368	131
B368A	131
B368B	131
B368H	131
B370	102A
B370A	102A
B370AA	102A
B370AB	102A
B370AC	102A
B370AHA	102A
B370AHB	102A
B370B	102A
B370C	102A
B370D	102A
B370P	102A
B370PB	102A
B370V	102A
B371	102A
B371D	102A
B372	158
B373	158
B375	127
B375-2B	127
B375-5B	127

To Be Replaced	ECG Replacement
B375A	127
B375A-2B	127
B375A-5B	127
B375A-NB	127
B375TV	127
B376	102A
B376G	102A
B377	102A
B377B	102A
B378	102A
B378A	102
B379	102
B379-2	102
B379A	102
B379B	102
B380	102
B380A	102
B381	102A
B382	102A
B383	102A
B383-1	102A
B383-2	102A
B384	126
B385	126
B386	102A
B387	100
B389	102A
B390	127
B391	121
B392	100
B393	100
B394	100
B395	100
B396	100
B400	102A
B400A	102A
B400B	102A
B400K	102A
B401	100
B402	100
B403	100
B405	158
B405-2C	158
B405-3C	158
B405-4C	158
B405A	158
B405B	158
B405C	158
B405D	158
B405E	158
B405G	158
B405H	158
B405K	158
B405R	158
B405RE	158
B407	121
B407-O	121
B407TV	121
B408	100
B410	127
B411	127
B413	104
B414	104
B415	158
B415A	158
B415B	158
B416	100
B417	100
B422	102
B423	102
B424	121
B425	127
B425Y	127
B426	121
B426BL	121
B426R	121
B426Y	121
B427	102A
B428	102A
B430	105
B431	158
B432	127
B433	105
B434	153
B434-O	153
B434-R	153
B434-Y	153
B435	153
B435-O	153
B435-R	153
B435-Y	153
B435Y	153
B439	102A
B439A	102A
B440	102A
B443	102A
B443A	102A
B443B	102A
B444	126
B444A	126
B444B	126
B445	121
B446	121
B447	127
B448	131
B449	121
B449F	121
B449P	121
B450	158
B450A	158
B451	158
B452	158
B452A	158
B453	158
B454	158

To Be Replaced	ECG Replacement
B455	158
B457	158
B457A	158
B457-C	158
B458	131
B458A	131
B459	102A
B459A	102A
B459B	102A
B459C	102A
B459D	102A
B459-O	102A
B460	102A
B460A	102A
B460B	102A
B461	176
B462	131
B463	131
B463BL	131
B463E	131
B463R	131
B463Y	131
B464	127
B465	127
B466	131
B467	131
B468	127
B468A	127
B468B	127
B468C	127
B468D	127
B470	102
B471	121
B471-2	121
B471A	121
B471B	121
B472	121
B472A	121
B472B	121
B473	131
B473D	131
B473F	131
B473H	131
B474	226
B474-2	226
B474-3	226
B474-4	226
B474-6D	226
B474MP	226
B474S	226
B474V4	226
B474V10	226
B474Y	226
B475	158
B475A	158
B475B	158
B475D	158
B475E	158
B475F	158
B475G	158
B475P	158
B475Q	158
B476	158
B481	131
B481D	131
B481E	131
B482	102A
B483	179
B484	179
B485	179
B486	102
B492	176
B492B	176
B494	158
B495	158
B495A	158
B495C	158
B495D	158
B495T	158
B496	102A
B497	102
B498	102A
B502	197
B503	197
B506	281
B506A	281
B506C	281
B506D	281
B507	153
B508	153
B509	153
B510	129
B510S	129
B511	153
B511C	153
B511D	153
B511E	187A
B512	153
B512A	153
B512-O	153
B512P	153
B512Q	153
B513	153
B513A	153
B514	153
B515	153
B516C	102A
B516CD	102A
B516D	102A
B516P	102A
B520	281
B522-1	197
B522-893	113
B523	187A
B525	298

To Be Replaced	ECG Replacement
B525C	298
B525D	298
B525E	298
B527-062	113
B528	292
B528C	292
B528D	292
B528E	292
B530	281
B532	285
B532P	285
B532Q	285
B532R	285
B532S	285
B534	102A
B534A	102A
B535	158
B536	292
B536K	292
B536L	292
B536M	292
B537	292
B537K	292
B537L	292
B537LM	153
B539	285
B539R	123A
B541	281
B542D	290
B544	294
B544D	294
B544E	294
B544F	294
B544P1	294
B544P1D	294
B544P1E	294
B544P1F	294
B546	292
B546AK	292
B546AL	292
B546EK	292
B546EX	292
B546I	292
B546K	292
B546L	292
B546M	292
B550	197
B554	285
B554-0	285
B554-R	285
B555	281
B555-0	281
B556	281
B556O	281
B556R	281
B557	281
B560	102A
B561	298
B561A	298
B561B	298
B561C	298
B561D	298
B562	288
B562A	298
B562B	288
B562C	288
B562D	288
B564	294
B564K	294
B564L	294
B564M	294
B568	292
B568C	292
B568D	292
B568WT	292
B569	197
B588-20	525
B595	197
B595-0	197
B595R	197
B596	197
B596-0	197
B598	129
B598E	129
B598F	129
B601-1006	160
B601-1007	160
B601-1008	160
B601-1009	102A
B601-1010	158
B601-1011	109
B601-1012	116
B614 007 0	177
B618	381
B641	290
B641Q	290
B641R	290
B641S	290
B642	234
B642P	234
B642Q	234
B642R	234
B643	290
B643Q	290
B643R	290
B643S	290
B646	383
B646B	383
B647	383
B647A	383
B648	374
B648A	374
B649	374
B649A	374
B684	294

To Be Replaced	ECG Replacement
B692X13	109
B742Q	234
B837	5697
B1017	121
B1022	102
B1022-1	102A
B1058	102
B-1058	102A
B1058-1	102A
B1085	121
B1151	121
B1151A	121
B1151B	121
B1152	121
B1152A	121
B1152B	121
B1154	102
B1154-1	102A
B1178	127
B1181	121
B1274	121
B1274A	121
B1274B	121
B-1338	123A
B1368	121
B1368A	121
B1368B	121
B1368C	121
B1368D	121
B1368E	121
B1368F	121
B-1421	123A
B-1426	159
B-1433	123A
B-1501U	116
B-1511	121
B-1599	177
B-1666	123A
B-1695	185
B-1702	177
B-1790	184
B-1808	5072A
B-1823	152
B-1842	123A
B1851	102A
B-1872	123A
B-1881U	116(2)
B-1882U	116(2)
B1904	121
B-1910	199
B-1914	121
B2090	139A
B2406C	506
B2620	506
B3030	102A
B3465	195A
B3468	195A
B3531	186
B3533	186
B3537	186
B3538	186
B3540	186
B3541	186
B3542	186
B3547	152
B3548	152
B3550	152
B3551	152
B3570	186
B3576	186
B3577	152
B3578	152
B3580	152
B3584	152
B3585	152
B3586	152
B3588	152
B3589	152
B3606	186
B3607	186
B3608	186
B3609	186
B3610	186
B3611	186
B3612	186
B3613	186
B3614	186
B3746	128
B3747	186
B3748	186
B3750	186
B4004B	102A
B5000	152
B5001	186
B5002	152
B5020	130
B5021	152
B5022	152
B5031	152
B5032	152
B-6001	133
B-6002	145A
B 6288	159
B 6340	128
B9426	108
B10064	104
B10069	104
B10142	127
B10142A	127
B10142B	127
B10143	127
B10143A	127
B10143B	127
B10162	121
B10163	121

To Be Replaced	ECG Replacement
B10474	121
B10475	121
B10912	121
B10913	121
B-12822-2	130
B-12822-4	181
B13517-2	912
B17307	130
B35016	5636
B36564	116
B54731-30	159
B56858-1	541
B56858-1RV	541
B56858-2	548
B57678-1	546
B57678-1RV	546
B57678-2	546
B57678-2RV	546
B-75561-31	159
B-75568-2	107
B-75583-1	123A
B-75583-2	123A
B-75583-i02	123A
B-75589-3	123A
B-75589-13	123A
B-75608-3	123A
B102000	127
B102001	127
B102002	127
B102003	127
B103000	127
B103001	127
B103002	127
B103003	127
B103004	127
B113000	179
B133550	130
B133577	130
B133578	123A
B133684	130
B133685	130
B133823	175
B143000	186
B143001	186
B143003	186
B143004	152
B143009	186
B143010	186
B143011	152
B143012	152
B143015	186
B143016	186
B143018	152
B143019	152
B143024	186
B143025	186
B143026	152
B143027	152
B170000	130
B170000BLK	130
B170000BRN	130
B170000-ORG	130
B170000-RED	130
B170001	130
B170001BLK	130
B170001-BLK	130
B170001BRN	130
B170001-BRN	130
B170001-ORG	130
B170001-RED	130
B170002	130
B170002-ORG	130
B170002-RED	130
B170003	130
B170003-BLK	181
B170003-BRN	181
B170003-RED	181
B170004	130
B170004-BLK	181
B170004-BRN	181
B170004-RED	181
B170005	130
B170005-BLK	181
B170005-BRN	181
B170005-RED	181
B170006	130
B170006-BLK	181
B170006-BRN	181
B170006-RED	181
B170007	130
B170007-BLK	181
B170007-BRN	181
B170007-RED	181
B170008	162
B170008-BLK	181
B170008-BRN	181
B170008-RED	181
B170009	130
B170010	130
B170011	130
B170012	130
B170013	130
B170014	130
B170015	130
B170016	130
B170017	181
B170018	130
B170019	130
B170020	130
B170021	130
B170022	130
B170023	181
B170024	130
B170025	130
B170026	181

To Be Replaced	ECG Replacement
B176000	163A
B176001	162
B176002	162
B176003	162
B176004	163A
B176005	163A
B176006	163A
B176007	163A
B176009	163A
B176010	163A
B176011	163A
B176013	163A
B176014	163A
B176015	163A
B176024	163A
B176025	163A
B176026	163A
B176027	163A
B176028	163A
B176029	163A
B177000	181
B211032	179
B232008	124
B673355H	289
B675317A	287
B675319A	287
B67876OA	198
B 722246-2	123A
B1045494P1	114
B5493957-4	129
B5493957-5	129
B5493957-6	129
B7102001	116
B7579500	125
B7978850	506
B8780010	123
B-F1A	102A
B-T1000-139	107
BA075	138A
BA6	158
BA6A	158
BA8-1A-21	160
BA67	123A
BA71	123A
BA100	116
BA-100	116
BA104	116
BA-104	116
BA105	116
BA108	116
BA114	177
BA119	116
BA120	611
BA121	611
BA127	116
BA128	116
BA129	116
BA130	116
BA133	506
BA136A	5800
BA-142-01	116
BA145	506
BA147	177
BA148	506
BA153	116
BA167	177
BA168	177
BA170	177
BA174	177
BA178	5800
BA182	177
BA187	177
BA202	519
BA216	177
BA219	177
BA223-20	525
BA243	610
BA243S	612
BA244	177
BA301	1135
BA301B	1135
BA-308	1052
BA313	1210
BA316	177
BA317	519
BA318	1241
BA401	1104
BA402	1100
BA501	1244
BA-501	1244
BA501A	1244
BA511A	1165
BA521	1166
BA521A	1166
BA1003	172A
BA1310	1226
BA1310F	1226
BA2443S	177
BAC SHIMI	519
BACSH2M1	123A
BACSH2M2	123A
BACSH2M3	123A
BACSHIMI	519
BACSIM1	519
BACT2F	123A
BAV205	5838
BAV206	5840
BAV207	5842
BAV208	5846
BAV209	5846
BAV215	5838
BAV216	5840
BAV217	5842
BAV218	5846
BAV219	5846

To Be Replaced	ECG Replacement
BAV225	5838
BAV226	5840
BAV227	5842
BAV228	5846
BAV229	5846
BAV305	5838
BAV306	5840
BAV307	5842
BAV308	5846
BAV309	5846
BAV315	5838
BAV316	5840
BAV317	5842
BAV318	5846
BAV319	5846
BAV325	5838
BAV326	5840
BAV327	5842
BAV328	5846
BAV329	5846
BAV405	5858
BAV406	5860
BAV407	5862
BAV408	5866
BAV409	5866
BAV415	5858
BAV416	5860
BAV417	5862
BAV418	5866
BAV419	5866
BAV425	5858
BAV426	5860
BAV427	5862
BAV428	5866
BAV429	5866
BAV505	5878
BAV506	5880
BAV507	5882
BAV508	5886
BAV509	5886
BAV515	5878
BAV516	5880
BAV517	5882
BAV518	5886
BAV519	5886
BAV525	5878
BAV526	5880
BAV527	5882
BAV528	5886
BAV529	5886
BAV705	5858
BAV706	5860
BAV707	5862
BAV708	5866
BAV709	5866
BAV715	5858
BAV716	5860
BAV717	5862
BAV718	5866
BAV719	5866
BAV725	5858
BAV726	5860
BAV727	5862
BAV728	5866
BAV729	5866
BAV805	5878
BAV806	5880
BAV807	5882
BAV808	5886
BAV809	5886
BAV815	5878
BAV816	5880
BAV817	5882
BAV818	5886
BAV819	5886
BAV825	5878
BAV826	5880
BAV827	5882
BAV828	5886
BAV829	5886
BAW10TF20	177
BAW11TF21	177
BAW12TF22	177
BAW13TF23	177
BAW16	177
BAW17	177
BAW18	177
BAW24	177
BAW24A	177
BAW24B	177
BAW25	177
BAW25A	177
BAW25B	177
BAW45	177
BAW53	177
BAW59	177
BAW59A	177
BAW59B	177
BAW62	519
BAW63A	177
BAW63B	177
BAW99	177
BAX12	116
BAX13	519
BAX-13	519
BAX-16	177
BAX16	177
BAX28	177
BAX30	177
BAX74	177
BAX87	177
BAX87A	177
BAX88TF11	177
BAX89A	177
BAX91C/TF102	519

To Be Replaced	ECG Replacement
BAX95TF600	519
BAY15	125
BAY16	125
BAY17	177
BAY18	177
BAY19	177
BAY20	177
BAY23	125
BAY31	177
BAY36	177
BAY41	177
BAY41A	177
BAY41B	177
BAY44	116
BAY52	177
BAY64	116
BAY68	177
BAY73	177
BAY86	116
BAY87	116
BAY90	125
BAZ202	136A
BB1A	116
BB2	506
BB-2	116
BB2A	506
BB2A184	116
BB-4	506
BB4	506
BB-6	506
BB6S	506
BB-6S	116
BB-10	506
BB10	506
BB-10S	506
BB-42-1B	1112
BB71	123A
BB100	614
BB-103	614
BB-103BL	614
BB104	614
BB105	611
BB107	116
BB109	614
BB109G	614
BB117	116
BB121	612
BB121A	612
BB122	612
BB127	116
BB142	612
BB-1033L	614
BBGS	506
BBY17	610
BC-075	138A
BC20C	199
BC25BB	159
BC-71	123A
BC71	123A
BC100	154
BC103	128
BC103C	128
BC107	123A
BC-107	123A
BC107A	123A
BC107a	123A
BC-107A	123A
BC107B	123A
BC108	123A
BC-108	123A
BC108A	123A
BC108B	123A
BC-108B	123A
BC108C	123A
BC109	123A
BC109B	123A
BC-109B	123A
BC109B	199
BC109BP	123A
BC109C	123A
BC110	123A
BC111	108
BC112	108
BC113	123A
BC114	123A
BC-114	123A
BC114TR	123A
BC115	123A
BC116	159
BC116A	159
BC117	154
BC118	123A
BC119	128
BC-119	128
BC119	123A
BC120	128
BC121	107
BC-121	123A
BC122	107
BC-122	123A
BC123	107
BC-123	123A
BC125	123A
BC125B	123A
BC126	159
BC126 1	159
BC127	199
BC128	199
BC129	123A
BC130	123A
BC131	123A
BC132	123A
BC134	123A
BC135	123A
BC136	123A

To Be Replaced	ECG Replacement
BC137	159
BC137-1	159
BC138	128
BC-138	128
BC139	129
BC140	128
BC-140	128
BC140	128
BC140-6	128
BC140-10	128
BC140-16	128
BC-140A	128
BC-140B	128
BC140C	128
BC-140C	128
BC140D	128
BC-140D	128
BC141	128
BC-141	128
BC141	128
BC141-6	128
BC141-10	128
BC141-16	128
BC142	128
BC-142	128
BC142	128
BC143	129
BC144	128
BC145	154
BC146	123A
BC147	123A
BC147A	123A
BC147B	123A
BC148	123A
BC148A	123A
BC-148A	123A
BC148B	123A
BC-148B	123A
BC148C	123A
BC-148C	123A
BC149	123A
BC149A	123A
BC149B	123A
BC149C	123A
BC149G	123A
BC150	123A
BC151	123A
BC152	123A
BC153	234
BC153-1	159
BC154	234
BC154-1	159
BC155	107
BC155A	108
BC155B	123A
BC155C	199
BC156	107
BC156A	108
BC156B	123A
BC156C	199
BC157	159
BC157-1	159
BC157A	159
BC157B	159
BC158	159
BC158-1	159
BC158A	159
BC158A-1	159
BC158B	159
BC158B-1	159
BC159	159
BC159-1	159
BC159A	159
BC159A-1	159
BC159B	159
BC159B-1	159
BC160	129
BC160-6	129
BC160-10	129
BC160-16	129
BC161	129
BC161-6	129
BC161-10	129
BC161-16	129
BC167	123A
BC-167-B	123A
BC167B	123A
BC168	123A
BC168A	123A
BC168B	123A
BC168C	123A
BC169	123A
BC169A	123A
BC169B	123A
BC-169B	123A
BC169C	123A
BC-169C	123A
BC169CL	123A
BC170	199
BC170A	199
BC170B	199
BC170C	199
BC171	123A
BC171A	123A
BC171B	123A
BC172	123A
BC172A	123A
BC172B	123A
BC172C	123A
BC173	199
BC173A	199
BC173B	199
BC173C	199
BC174	128
BC174A	128

To Be Replaced	ECG Replacement
BC174B	128
BC175	123A
BC177	234
BC177-1	159
BC177A	234
BC177A-1	159
BC177B	234
BC177B-1	159
BC177V	159
BC177V1	159
BC177V-1	159
BC177V1-1	159
BC178	234
BC178-1	159
BC178A	234
BC178A-1	159
BC178B	234
BC178B-1	159
BC178C	234
BC178D	159
BC178D-1	159
BC178V	159
BC178V1	159
BC178V-1	159
BC178V1-1	159
BC179	234
BC179-1	159
BC179A	234
BC179A-1	159
BC179B	234
BC179B-1	159
BC179C	234
BC180	123A
BC180b	123A
BC181	159
BC181A	159
BC181A-1	159
BC182	123A
BC182A	123A
BC182B	123A
BC182L	123A
BC183	123A
BC183A	123A
BC183B	123A
BC183L	123A
BC184	123A
BC184B	123A
BC184L	123A
BC185	123A
BC186	123A
BC187	159
BC187-1	159
BC188	107
BC189	107
BC190B	123A
BC192	159
BC192-1	159
BC194	108
BC194B	108
BC195	108
BC195CD	108
BC196	159
BC196-1	159
BC196A	159
BC196A-1	159
BC196B	159
BC196B-1	159
BC196V1	159
BC196V1-1	159
BC197	123A
BC197A	123A
BC197B	123A
BC198	123A
BC199	123A
BC200	159
BC200-1	159
BC200(Green)	234
BC200(Red)	234
BC200(Yellow)	234
BC201	159
BC201-1	159
BC202	159
BC202-1	159
BC203	159
BC203-1	159
BC204	234
BC204-1	159
BC204A	234
BC204A-1	159
BC204B	234
BC204B-1	159
BC204V	159
BC204V1	159
BC204V-1	159
BC204V1-1	159
BC205	159
BC205-1	159
BC205A	159
BC205A-1	159
BC205B	159
BC205B-1	159
BC205C	106
BC205L	106
BC205V	159
BC205V1	159
BC205V-1	159
BC205V1-1	159
BC206	234
BC206-1	159
BC206A	234
BC206B	234
BC206B-1	159
BC206C	234
BC-207	116
BC207	123A

To Be Replaced	ECG Replacement
BC207A	123A
BC207B	123A
BC207BL	123A
BC208	123A
BC208A	123A
BC208AL	123A
BC208B	123A
BC208BL	123A
BC208C	123A
BC208CL	123A
BC209	123A
BC209/7825B	199
BC209A	123A
BC209B	123A
BC209BL	123A
BC209C	123A
BC209CL	123A
BC210	123A
BC211	128
BC212	159
BC212-1	159
BC212A	159
BC212B	159
BC212K	159
BC212K-1	159
BC212KA	159
BC212KA-1	159
BC212KB	159
BC212KB-1	159
BC212L	159
BC212L-1	159
BC212LA	159
BC212LA-1	159
BC212LB	159
BC212LB-1	159
BC212VI	159
BC213	159
BC213-1	159
BC213A	159
BC213B	159
BC213K	159
BC213K-1	159
BC213KA	159
BC213KA-1	159
BC213KB	159
BC213KB-1	159
BC213KC	159
BC213KC-1	159
BC213L	159
BC213L-1	159
BC213LA	159
BC213LA-1	159
BC213LB	159
BC213LB-1	159
BC213LC	159
BC213LC-1	159
BC214	159
BC214-1	159
BC214A	159
BC214B	159
BC214K	159
BC214K-1	159
BC214KA	159
BC214KA-1	159
BC214KB	159
BC214KB-1	159
BC214KC	159
BC214KC-1	159
BC214L	159
BC214L-1	159
BC214LA	159
BC214LA-1	159
BC214LB	159
BC214LB-1	159
BC214LC	159
BC214LC-1	159
BC216	128
BC216A	128
BC216B	128
BC220	123A
BC221	159
BC221-1	159
BC222	123A
BC223A	123A
BC223B	123A
BC224	234
BC225	234
BC225-1	159
BC226	192
BC231A	290
BC231B	193A
BC232A	297
BC232B	297
BC233A	123A
BC237	123A
BC237A	123A
BC237B	123A
BC238	199
BC238A	199
BC238B	199
BC238C	199
BC239	123A
BC239B	199
BC239C	199
BC250	159
BC250-1	159
BC250A	159
BC250A-1	159
BC250B	159
BC250B-1	159
BC250C	159
BC250C-1	159
BC251	159
BC251A	159
BC251A-1	159

To Be Replaced	ECG Replacement
BC251B	159
BC251B-1	159
BC251C	159
BC251C-1	159
BC252	159
BC252-1	159
BC252A	159
BC252A-1	159
BC252B	159
BC252B-1	159
BC252C	159
BC252C-1	159
BC253	159
BC253-1	159
BC253A	159
BC253A-1	159
BC253B	159
BC253B-1	159
BC253C	159
BC253C-1	159
BC254	128
BC255	128
BC256	159
BC256-1	159
BC256A	159
BC256A-1	159
BC256B	159
BC256B-1	159
BC256C-1	159
BC257	159
BC257-1	159
BC257A	193A
BC257B	193A
BC257VI	159
BC258	159
BC258-1	159
BC258A	193A
BC258B	193A
BC258VI	159
BC259	159
BC259-1	159
BC259A	193A
BC259B	193A
BC260	159
BC260-1	159
BC260A	159
BC260A-1	159
BC260B	159
BC260B-1	159
BC260C	159
BC260C-1	159
BC261	159
BC-261	159
BC261A	159
BC261A-1	159
BC261B	159
BC261B-1	159
BC261C	159
BC261C-1	159
BC262	159
BC262-1	159
BC262A	159
BC262A-1	159
BC262B	159
BC262B-1	159
BC262C	159
BC262C-1	159
BC263	159
BC263A	159
BC263A-1	159
BC263B	159
BC263B-1	159
BC263C	159
BC263C-1	159
BC264A	457
BC264C	133
BC266	159
BC266-1	159
BC266A	159
BC266B	159
BC267	123A
BC268	123A
BC269	123A
BC270	123A
BC280	123A
BC280A	123A
BC280B	123A
BC280C	123A
BC281	159
BC281-1	159
BC281A	159
BC281A-1	159
BC281B	159
BC281B-1	159
BC281C	159
BC281C-1	159
BC282	123A
BC283	159
BC283-1	159
BC284	123A
BC284A	123A
BC284B	123A
BC285	123A
BC286	128
BC287	129
BC288	128
BC289	123A
BC289A	123A
BC289B	123A
BC290	123A
BC290B	123A
BC290C	123A
BC291	159
BC291-1	159
BC291A	159

To Be Replaced	ECG Replacement
BC291A-1	159
BC291D	159
BC291D-1	159
BC292	159
BC292A	159
BC292A-1	159
BC292D	159
BC292D-1	159
BC295	108
BC297	159
BC298	159
BC301	128
BC303	129
BC307	159
BC-307	116
BC307A	159
BC307B	159
BC307V1	159
BC308	159
BC308A	159
BC308B	159
BC308C	159
BC308V1	159
BC309	159
BC309A	159
BC309B	159
BC309C	193
BC310	128
BC311	129
BC312	198
BC313	128
BC315	159
BC317	123A
BC317A	123A
BC317B	123A
BC318	123A
BC318A	123A
BC318B	123A
BC318C	123A
BC319	123A
BC319B	123A
BC319C	123A
BC320	234
BC320A	234
BC320C	234
BC321	234
BC321A	234
BC321B	234
BC321C	234
BC322	234
BC322B	234
BC322C	234
BC325	159
BC325A	159
BC326	159
BC326A	159
BC327	298
BC327-16	298
BC327-25	298
BC328	298
BC328-16	298
BC328-25	298
BC337	293
BC337-16	293
BC337-25	293
BC338	293
BC338-16	293
BC338-25	293
BC340-6	128
BC340-10	128
BC340-16	128
BC341-6	128
BC341-10	128
BC360-6	129
BC360-10	129
BC360-16	129
BC361-6	129
BC361-10	129
BC370	193
BC377	123A
BC378	123A
BC381	159
BC382B	199
BC382C	199
BC383B	199
BC383C	199
BC384C	199
BC385B	199
BC386A	199
BC386B	199
BC396	129
BC400	159
BC404A	129
BC404V1	129
BC405	159
BC405A	159
BC405B	159
BC406	193
BC406B	159
BC408	123A
BC408A	199
BC408B	199
BC408BR	199
BC408C	199
BC409	123A
BC412	195A
BC413B	199
BC413C	199
BC414B	199
BC414C	199
BC415A	159
BC415B	159
BC416A	159
BC416B	159
BC417	159

To Be Replaced	ECG Replacement
BC418	159
BC419	159
BC429	128
BC430	188
BC442	107
BC456	123A
BC460	189
BC461	189
BC477	129
BC477A	129
BC477V1	129
BC478	159
BC478A	159
BC478B	159
BC479	159
BC479B	159
BC507A	123A
BC507B	123A
BC508A	123A
BC508B	123A
BC508C	123A
BC509B	123A
BC509C	123A
BC510	192
BC510B	123A
BC510C	107
BC512	159
BC512A	159
BC512B	193
BC513	159
BC513A	159
BC513B	193
BC514	193
BC514A	159
BC514B	193
BC520	199
BC520B	199
BC520C	199
BC521	199
BC521C	199
BC521D	199
BC522	199
BC522C	199
BC522D	199
BC522E	199
BC523	199
BC523B	199
BC523C	199
BC526A	234
BC526B	234
BC526C	234
BC527	129
BC528	129
BC532	194
BC533	194
BC534	129
BC535	128
BC537	128
BC538	128
BC546	199
BC546A	199
BC546B	199
BC547A	199
BC547B	199
BC547C	123A
BC548	289
BC548A	199
BC548B	199
BC548C	199
BC549B	199
BC549C	199
BC556A	159
BC557A	159
BC558A	159
BC558B	159
BC559A	159
BC559B	159
BC560A	159
BC582	123AP
BC582A	123AP
BC582B	123AP
BC583	123A
BC583A	123AP
BC583B	123AP
BC-584	123AP
BC635	128
BC636	129
BC637	128
BC638	129
BC639	128
BC640	129
BC727	129
BC728	129
BC737	128
BC738	128
BC-1029-CA	7400
BC-1029-CB	7401
BC-1029-CC	7402
BC-1029-CD	7404
BC-1029-CE	7405
BC-1029-CF	7406
BC-1029-CG	7407
BC-1029-CH	7408
BC-1029-CJ	7413
BC-1029-CK	7420
BC-1029-CL	7430
BC-1029-CM	7438
BC-1029-CN	7440
BC-1029-CP	7451
BC-1029-CR	7454
BC-1029-CS	7474
BC-1029-CT	7475
BC-1029-CU	7476
BC-1029-CW	7486
BC-1029-CY	7489

To Be Replaced	ECG Replacement
BC-1029-DB	74100
BC-1029-DC	74121
BC-1029-DD	74123
BC-1029-DE	74153
BC-1029-DF	74154
BC-1029-DG	74157
BC-1029-DH	74181
BC-1029-DJ	74193
BC-1029-DL	74198
BC-1029-DM	7493
BC-1029-DN	74150
BC-1029-DP	74155
BC-1029-DR	74164
BC-1029-DU	74165
BC1029LB	917
BC-1072	123A
BC1073	104
BC1073A	104
BC-1082	123A
BC-1086	123A
BC1096	123A
BC-1096	123A
BC1274	104
BC1274A	104
BC1274B	104
BC1478	123A
BC-1690	123A
BC6500	108
BCF5	117
BCM1002-1	160
BCM1002-2	107
BCM1002-3	158
BCM1002-4	102A
BCM1002-5	102A
BCM1002-6	131
BCM1002-18	158
BCR25A-4	5683
BCR25A-6	5684
BCR25A-8	5685
BCR25A-10	5686
BCW29	106
BCW29R	106
BCW30	106
BCW30R	106
BCW31	108
BCW31R	108
BCW32	108
BCW32R	108
BCW34	123A
BCW35	159
BCW36	123A
BCW37	159
BCW37A	159
BCW44	128
BCW45	159
BCW46	128
BCW47	128
BCW48	128
BCW49	128
BCW50	171
BCW51	192
BCW52	193
BCW56	159
BCW56A	159
BCW57	159
BCW57A	159
BCW58	159
BCW58A	159
BCW59	159
BCW59A	159
BCW60A	123A
BCW60AA	123A
BCW61	159
BCW61A	193
BCW61B	193
BCW61C	159
BCW61D	159
BCW62	159
BCW62A	159
BCW62B	193
BCW63	159
BCW63A	159
BCW63B	193
BCW64	193
BCW64A	159
BCW64B	193
BCW69	159
BCW69R	159
BCW71	108
BCW71R	108
BCW72	108
BCW72R	108
BCW73-16	192
BCW74-16	192
BCW75-10	193
BCW75-16	193
BCW76-10	193
BCW76-16	193
BCW77-16	192
BCW78-16	192
BCW79-10	159
BCW79-16	159
BCW79-25	211
BCW80-10	159
BCW80-16	159
BCW80-25	211
BCW82	192
BCW82A	192
BCW82B	192
BCW83	123A
BCW83A	192A
BCW83B	192
BCW84	192
BCW86	193
BCW90	192

To Be Replaced	ECG Replacement
BCW90K	192
BCW91	192
BCW91K	192
BCW92	193
BCW92K	193
BCW93	193
BCW93K	193
BCW94	123A
BCW94K	128
BCW95	128
BCW95K	128
BCW96	159
BCW96K	159
BCW97	159
BCW97K	159
BCX10	211
BCY10	159
BCY10A	159
BCY11	159
BCY11A	159
BCY12	159
BCY12A	159
BCY13	123A
BCY15	123A
BCY16	123A
BCY17	129
BCY18	129
BCY19	129
BCY21	129
BCY22	129
BCY23	129
BCY24	129
BCY25	129
BCY26	129
BCY27	129
BCY28	129
BCY29	129
BCY30	129
BCY36	129
BCY32	129
BCY33	129
BCY34	129
BCY35	159
BCY35A	159
BCY36	123A
BCY37	159
BCY37A	159
BCY38	159
BCY38A	159
BCY39	159
BCY39A	159
BCY40	159
BCY40A	159
BCY42	123A
BCY43	123A
BCY46	128
BCY47	128
BCY48	128
BCY49	128
BCY50	123A
BCY-50	123A
BCY50I	123A
BCY51	123A
BCY51I	123A
BCY54	159
BCY54A	159
BCY56	123A
BCY57	123A
BCY58	123A
BCY-58	123A
BCY58B	123A
BCY58C	123A
BCY58D	123A
BCY58VII	123A
BCY58VIII	123A
BCY59	123A
BCY59A	123A
BCY59B	123A
BCY59C	123A
BCY59D	123A
BCY59VII	123A
BCY59VIII	123A
BCY65	128
BCY66	128
BCY67	129
BCY69	123A
BCY70	159
BCY70A	159
BCY71	159
BCY71A	159
BCY72	159
BCY72A	159
BCY77VII	159
BCY77VIII	159
BCY78	234
BCY78A	129
BCY78B	129
BCY78V11	159
BCY78V111	159
BCY78VII	159
BCY78VIII	159
BCY79	234
BCY79VII	193
BCY79VIII	193
BCY84A	123A
BCY85	194
BCY86	194
BCY87	108
BCY88	108
BCY89	108
BCY90	159
BCY90A	159
BCY90B	159
BCY90B-1	159
BCY91	159

To Be Replaced	ECG Replacement
BCY91A	159
BCY91B	159
BCY91B-1	159
BCY92	159
BCY92A	159
BCY92B	159
BCY92B-1	159
BCY93	159
BCY93A	159
BCY93B	159
BCY93B-1	159
BCY94	159
BCY94A	159
BCY94B	159
BCY94B-1	159
BCY95	159
BCY95A	159
BCY95B	159
BCY95B-1	159
BCY96	129
BCY96B	129
BCY97	129
BCY97B	129
BCY98	159
BCY98A	159
BCY98B	159
BCY98B-1	159
BCY443	128
BCY501	123A
BCY511	123A
BCY771X	159
BCZ10	159
BCZ10A	159
BCZ10B	159
BCZ10C	159
BCZ11	159
BCZ11A	159
BCZ12	159
BCZ12A	159
BCZ12B	159
BCZ12C	159
BCZ13	159
BCZ13A	159
BCZ13B	159
BCZ13C	159
BCZ13D	159
BCZ13E	159
BCZ13F	159
BCZ13G	159
BCZ13H	159
BCZ14	159
BCZ14A	159
BCZ14B	159
BCZ14C	159
BCZ14D	159
BCZ14E	159
BCZ14F	159
BD-00072	103A
BD-1A	116(2)
BD3A-1B4	166
BD-3A184	166
BD3A-184	117
BD28	6407
BD71	108
BD106	152
BD106A	152
BD106B	152
BD-107	116
BD107A	152
BD107B	152
BD-107(Rect.)	116
BD109	152
BD111	130
BD111A	181
BD112	130
BD113	130
BD116	130
BD117	116
BD118	130
BD119	124
BD120	124
BD121	328
BD123	328
BD124	152
BD127	157
BD130	130
BD131	184
BD-131	241
BD132	242
BD-132	242
BD135	184
BD136	185
BD137	184
BD138	185
BD139	184
BD140	185
BD141	280
BD142	130
BD144	162
BD145	130
BD148	182
BD149	184
BD151	185
BD152	185
BD153	184
BD154	184
BD155	184
BD156	185
BD157	157
BD158	157
BD160	162
BD162	152
BD163	152
BD165	184
BD166	185

To Be Replaced	ECG Replacement
BD167	184
BD168	185
BD169	182
BD170	183
BD175	184
BD176	185
BD177	184
BD178	185
BD179	182
BD180	183
BD181	130
BD182	130
BD183	284
BD183ELK	130
BD184	280
BD185	184
BD186	185
BD187	184
BD188	185
BD189	184
BD190	185
BD195	184
BD196	185
BD197	184
BD199	182
BD200	183
BD205	184
BD206	185
BD207	184
BD208	185
BD215	157
BD216	157
BD220	152
BD221	152
BD222	152
BD223	153
BD224	153
BD225	153
BD231A	152
BD232	157
BD233	184
BD234	185
BD235	184
BD236	185
BD237	182
BD238	183
BD239	152
BD239A	152
BD240	153
BD240A	153
BD241	152
BD241A	291
BD242	153
BD242A	292
BD242B	153
BD243	152
BD243B	152
BD244	153
BD244A	153
BD244B	153
BD245	130
BD245A	280
BD245B	284
BD245C	284
BD246	180
BD246A	281
BD246B	180
BD246C	180
BD249	181
BD249A	181
BD249B	181
BD249C	181
BD250	180
BD250A	180
BD250B	180
BD250C	180
BD262A	153
BD262A(Darlington)	254
BD262(Darlington)	254
BD263	253
BD263A	259
BD264	264
BD264A	264
BD265	263
BD266	264
BD266A	264
BD267	263
BD267A	263
BD271	152
BD272	153
BD273	196
BD274	197
BD275	196
BD276	197
BD278	196
BD311	280
BD313	280
BD315	181
BD317	181
BD433	152
BD434	153
BD435	152
BD436	153
BD437	152
BD438	153
BD439	152
BD440	153
BD441	196
BD442	197
BD461	182
BD462	183
BD463	182
BD464	183
BD533	152
BD534	153

To Be Replaced	ECG Replacement
BD535	152
BD536	153
BD537	196
BD538	197
BD561	184
BD562	185
BD575	241
BD576	242
BD577	241
BD578	242
BD580	242
BD585	241
BD586	242
BD587	241
BD588	242
BD589	241
BD590	242
BD643	263
BD644	264
BD645	263
BD646	264
BD647	263
BD648	264
BD675	257
BD675A	257
BD676	258
BD676A	258
BD677	257
BD677A	257
BD678	258
BD678A	258
BD679	257
BD679A	257
BD680	258
BD680A	258
BD695A	259
BD696A	260
BD705	331
BD706	332
BD707	331
BD708	332
BD709	331
BD710	332
BD711	331
BD712	332
BD905	331
BD906	332
BD907	331
BD908	332
BD909	331
BD910	332
BD911	331
BD912	332
BDOA	166
BDX10	280
BDX11	280
BDX12	162
BDX13	181
BDX18	219
BDX18N	219
BDX20	219
BDX23	283
BDX24	280
BDX25	291
BDX27	153
BDX27-6	153
BDX27-10	153
BDX28	153
BDX28-6	153
BDX28-10	153
BDX29	291
BDX29-6	291
BDX29-10	291
BDX30	291
BDX30-6	291
BDX30-10	291
BDX32	238
BDX40	130
BDX41	181
BDX50	284
BDX51	284
BDX60	284
BDX61	284
BDX62	244
BDX62A	244
BDX63	243
BDX63A	247
BDX64	248
BDX64A	248
BDX65	247
BDX65A	247
BDX70	196
BDX71	196
BDX72	196
BDX73	196
BDX74	152
BDX75	152
BDX91	280
BDX93	280
BDX95	280
BDY10	181
BDY-10	181
BDY11	181
BDY12	152
BDY13	152
BDY15	155
BDY15A	155
BDY15B	155
BDY15C	155
BDY16	175
BDY16A	155
BDY16B	155
BDY17	130
BDY18	284
BDY19	284

To Be Replaced	ECG Replacement
BDY20	284
BDY23	130
BDY24	283
BDY25	283
BDY26	283
BDY27	283
BDY28	283
BDY34	152
BDY37	284
BDY38	130
BDY39	130
BDY53	130
BDY54	162
BDY55	284
BDY56	284
BDY57	387
BDY58	387
BDY60	282
BDY61	179
BDY62	121
BDY63	280
BDY65	190
BDY66	190
BDY69	281
BDY70	129
BDY71	175
BDY72	175
BDY73	284
BDY74	280
BDY76	284
BDY77	284
BDY78	175
BDY79	175
BDY81	291
BDY82	153
BDY83	153
BDY90	328
BDY91	328
BDY92	328
BDY93	283
BDY94	283
BE6	100
BE6A	100
BE-55	614
BE-66	123A
BE71	128
BE107	116
BE117	116
BE127	116
BE173	107
BF1	102A
BF1A	102A
BF2	102A
BF5	121
BF65	234
BF-66	123A
BF71	123A
BF108	154
BF109	154
BF110	154
BF111	154
BF114	154
BF-115	108
BF117	154
BF118	154
BF119	154
BF121	107
BF123	107
BF125	107
BF127	107
BF140	154
BF140A	154
BF140R	154
BF140S	154
BF152	108
BF153	108
BF154	108
BF155	161
BF155R	154
BF155S	154
BF156	154
BF157	154
BF157B	154
BF158	108
BF159	108
BF160	108
BF161	161
BF162	108
BF163	108
BF164	108
BF165	108
BF166	161
BF167	161
BF168	161
BF169	161
BF173	108
BF173A	108
BF174	154
BF175	161
BF176	108
BF177	154
BF178	154
BF179	154
BF179A	154
BF179B	154
BF179C	154
BF180	161
BF181	161
BF182	161
BF183	161
BF183A	123A
BF184	161
BF185	161
BF186	154
BF187	108

To Be Replaced	ECG Replacement
BF188	108
BF189	123A
BF194	107
BF194A	108
BF194B	107
BF195	107
BF195C	107
BF195D	107
BF196	107
BF197	107
BF198	107
BF199	161
BF200	161
BF206	161
BF207	161
BF208	161
BF209	161
BF212	161
BF213	161
BF214	161
BF-214	123A
BF215	161
BF-215	123A
BF216	107
BF217	107
BF218	107
BF219	107
BF220	107
BF222	161
BF223	108
BF224	108
BF224J	123A
BF225	108
BF225J	123A
BF226	161
BF-226	123A
BF229	107
BF230	107
BF232	161
BF233-2	108
BF233-3	108
BF233-4	108
BF233-5	108
BF234	108
BF235	108
BF236	108
BF237	108
BF238	108
BF240	107
BF241	107
BF243	234
BF244	133
BF244A	132
BF244B	132
BF244C	132
BF245	133
BF245A	133
BF245B	133
BF245C	133
BF246	133
BF247	133
BF248	123A
BF249	123A
BF250	123A
BF251	161
BF252	161
BF253	107
BF254	107
BF255	107
BF256	132
BF256A	133
BF256B	133
BF256C	133
BF257	154
BF258	154
BF259	154
BF260	161
BF261	161
BF262	108
BF263	108
BF264	108
BF270	161
BF271	161
BF273	161
BF273C	161
BF273D	161
BF274	161
BF274B	161
BF274C	161
BF287	161
BF288	161
BF290	161
BF291	123A
BF291A	123A
BF291B	123A
BF292	171
BF292A	154
BF292B	154
BF292C	154
BF293	123A
BF293A	123A
BF293D	123A
BF294	154
BF297	194
BF298	288
BF299	288
BF302	161
BF303	311
BF304	161
BF305	154
BF306	278
BF308	311
BF309	311
BF310	107
BF311	107

To Be Replaced	ECG Replacement
BF314	311
BF315	106
BF316	106
BF321A	123
BF321B	123A
BF321C	123A
BF321D	123A
BF321E	123A
BF321F	123A
BF322	278
BF325	278
BF329	107
BF330	278
BF332	107
BF333	107
BF333C	107
BF333D	107
BF334	107
BF335	107
BF336	154
BF337	154
BF338	154
BF339	106
BF340	199
BF340A	159
BF340B	159
BF340C	159
BF340D	159
BF341	199
BF341A	159
BF341B	159
BF341C	159
BF341D	159
BF342	199
BF342A	159
BF342B	159
BF342C	159
BF342D	159
BF343	199
BF344	161
BF345	161
BF348	133
BF355	154
BF357	108
BF387	128
BF440	159
BF441	159
BF450	159
BF451	159
BF456	171
BF457	171
BF458	171
BF459	171
BF516	161
BF540	106
BF594	108
BF595	108
BF657	154
BF658	154
BF659	154
BF689	161
BF-832	159
BF26235-5	117
BFR11	123A
BFR16	123A
BFR18	171
BFR19	171
BFR20	171
BFR22	190
BFR25	199
BFR26	123A
BFR36	128
BFR57	171
BFR58	171
BFR59	171
BFR77	282
BFR78	282
BFR98	362
BFR99	395
BFS13E	107
BFS13F	107
BFS13G	107
BFS14A	159
BFS14B	159
BFS14C	159
BFS14D	159
BFS14E	107
BFS14F	107
BFS14G	107
BFS15E	107
BFS15F	107
BFS15G	107
BFS16	159
BFS16A	159
BFS16B	159
BFS16C	159
BFS16D	159
BFS16E	107
BFS16F	107
BFS16G	107
BFS17	108
BFS17R	108
BFS18	107
BFS18CA	161
BFS18R	107
BFS19	107
BFS19R	107
BFS20	107
BFS20R	107
BFS21	133
BFS21A	133
BFS22	195A
BFS22A	282
BFS23	195A
BFS23A	282

To Be Replaced	ECG Replacement
BFS26	159
BFS26A	159
BFS26B	159
BFS26C	159
BFS26D	159
BFS26E	159
BFS26F	159
BFS26G	159
BFS27E	161
BFS27F	161
BFS27G	161
BFS28	221
BFS28R	221
BFS29	128
BFS29P	192
BFS30	192
BFS30P	192
BFS31	159
BFS31P	123A
BFS32	159
BFS32P	159
BFS33	159
BFS33P	159
BFS34	193
BFS34P	159
BFS36	128
BFS36A	123A
BFS36B	123A
BFS36C	123A
BFS37	159
BFS37A	159
BFS38	123A
BFS38A	123A
BFS39	123AP
BFS40	159
BFS40A	159
BFS41	159
BFS42	123A
BFS42A	123A
BFS42B	123A
BFS42C	123A
BFS43	123A
BFS43A	123A
BFS43B	123A
BFS43C	123A
BFS50	186
BFS51	186
BFS62	108
BFS68	132
BFS68P	132
BFS69	159
BFS96	159
BFS97	159
BFS99	171
BFT33	282
BFT34	282
BFT39	282
BFT40	282
BFT41	282
BFT42	282
BFT43	282
BFT60	129
BFT61	129
BFT62	129
BFT79	129
BFT80	129
BFT81	129
BFV20	159
BFV21	159
BFV22	159
BFV25	159
BFV26	159
BFV29	159
BFV30	159
BFV33	159
BFV82	159
BFV82A	159
BFV82B	159
BFV82C	159
BFV83	108
BFV83A	108
BFV83B	123A
BFV83C	123A
BFV85	123A
BFV85A	123A
BFV85B	123A
BFV85C	123A
BFV85D	108
BFV85E	108
BFV85F	108
BFV85G	108
BFV86	159
BFV86A	159
BFV86B	159
BFV86C	159
BFV87	123A
BFV88	123A
BFV88A	123A
BFV88B	123A
BFV88C	123A
BFV89	199
BFV89A	199
BFW10	132
BFW11	132
BFW12	132
BFW13	133
BFW16A	278
BFW17A	278
BFW19	278
BFW20	159
BFW24	282
BFW25	282
BFW26	282
BFW29	128
BFW30	278

To Be Replaced	ECG Replacement
BFW31	159
BFW32	123A
BFW33	128
BFW37	154
BFW44	129
BFW45	154
BFW46	123A
BFW47	278
BFW54	132
BFW55	132
BFW56	132
BFW59	123A
BFW60	123A
BFW61	132
BFW63	161
BFW64	108
BFW68	123A
BFW87	189
BFW88	189
BFW89	159
BFW90	159
BFW91	129
BFX12	106
BFX13	106
BFX17	128
BFX18	108
BFX19	108
BFX20	108
BFX21	108
BFX29	159
BFX30	159
BFX31	161
BFX32	107
BFX33	278
BFX34	154
BFX35	159
BFX37	234
BFX38	129
BFX39	129
BFX40	129
BFX41	129
BFX43	108
BFX44	108
BFX45	108
BFX48	106
BFX50	128
BFX51	128
BFX52	128
BFX53	192
BFX55	278
BFX59F	123A
BFX60	161
BFX61	128
BFX62	161
BFX65	159
BFX68	128
BFX68A	128
BFX69	128
BFX69A	128
BFX73	161
BFX74	128
BFX74A	129
BFX77	161
BFX84	128
BFX85	128
BFX86	128
BFX87	129
BFX88	129
BFX89	161
BFX92	123A
BFX93	123A
BFX94	128
BFX95	128
BFX95A	123A
BFX96	128
BFX96A	186
BFX97	128
BFX98	154
BFY	123A
BFY10	128
BFY11	128
BFY12	128
BFY13	128
BFY14	128
BFY15	128
BFY16	192
BFY17	128
BFY18	129
BFY19	128
BFY22	123A
BFY-22	123A
BFY23	123A
BFY-23	123A
BFY23A	123A
BFY-23A	123A
BFY24	123A
BFY-24	123A
BFY25	123A
BFY26	123A
BFY27	128
BFY28	123A
BFY29	123A
BFY-29	123A
BFY30	123A
BFY-30	123A
BFY33	123A
BFY34	128
BFY37	123A
BFY-37	108
BFY37I	123A
BFY37i	160
BFY39	123A
BFY-39	123A
BFY39/1	123A
BFY39-1	199

To Be Replaced	ECG Replacement
BFY39/2	123A
BFY39-2	199
BFY39/3	123A
BFY39-3	199
BFY39I	123A
BFY40	128
BFY41	198
BFY43	154
BFY44	128
BFY45	154
BFY46	128
BFY47	107
BFY-47	108
BFY48	107
BFY-48	108
BFY49	107
BFY50	128
BFY51	128
BFY52	128
BFY53	128
BFY55	128
BFY56	128
BFY56A	128
BFY57	154
BFY63	123A
BFY64	129
BFY65	154
BFY66	128
BFY67	128
BFY67A	128
BFY67C	128
BFY68	128
BFY68A	128
BFY69	107
BFY69A	107
BFY69B	161
BFY70	128
BFY72	128
BFY73	123A
BFY74	123A
BFY75	123A
BFY76	123A
BFY77	123A
BFY78	108
BFY79	161
BFY80	154
BFY87	161
BFY87A	161
BFY90	316
BFY90B	316
BFY94	159
BFY99	128
BFY371	123A
BFY391	123A
BG-66	123A
BG71	123A
BG-94	123A
BH4R1	116
BH4R6	156
BH71	123A
BI71	123A
BI-82	106
BI-88	312
BIP7201	123
BIR	247
BJ1A	159
BJ1B	159
BJ1C	159
BJ2	159
BJ2A	159
BJ2B	159
BJ2C	159
BJ2D	159
BJ3	159
BJ3A	159
BJ3B	159
BJ4	159
BJ4A	159
BJ4B	159
BJ4C	159
BJ4D	159
BJ5	159
BJ5A	159
BJ5B	159
BJ6	159
BJ6A	159
BJ6B	159
BJ6C	159
BJ6D	159
BJ7	159
BJ7A	159
BJ7B	159
BJ7C	159
BJ7D	159
BJ8	159
BJ8A	159
BJ8B	159
BJ8C	159
BJ8D	159
BJ9	159
BJ9A	159
BJ9B	159
BJ9C	159
BJ9D	159
BJ10	159
BJ11	159
BJ11A	159
BJ11B	159
BJ12	159
BJ12B	159
BJ12C	159
BJ13	159
BJ13A	159
BJ13B	159
BJ14	159

To Be Replaced	ECG Replacement
BJ14A	159
BJ15	159
BJ56	159
BJ-155	614
BJ160	159
BJ161	159
BJ161A	159
BJ161B	159
BJ161C	159
BLVA156A	136A
BLVA168	5071A
BLVA456A	136A
BLVA468	5071A
BLW16	346
BLW25	360
BLX67	362
BLX68	363
BLX88	278
BLX89	278
BLY10	130
BLY11	130
BLY12	130
BLY15	130
BLY15A	175
BLY20	186
BLY21	152
BLY27	192
BLY28	192
BLY33	278
BLY34	278
BLY35	152
BLY36	152
BLY37	186
BLY38	186
BLY47	130
BLY47A	175
BLY48	130
BLY48A	175
BLY49	162
BLY49A	175
BLY50	162
BLY53	186
BLY62	186
BLY63	152
BLY78	186
BLY88	152
BLY88A	350
BLY89	152
BLY89A	351
BLY89T	351
BLY91	186
BLY91A	357
BLY92A	360
BLY93	359
BLY93A	360
BLY99	278
BM70-12	352
BM80-12	352
BMT1991	159
BMT2303	159
BMT2411	159
BMT2412	159
BN-66	123A
BN7133	130
BN7168	175
BN7214	130
BN7253	154
BN7517	123A
BN7518	123A
BN7551	142A
BNB-2202	7402
BO-71	107
BO90	139A
BO94	140A
BO8875/2	159
BP67	123A
BP5263	160
BPS-S-50	519
BPW30	3036
BPX59	3036
BQ67	123A
BQ-94	123A
BR0985	288
BR-1	166
BR-10S	506
BR42	116
BR44	116
BR46	116
BR47	116
BR48	116
BR52	116
BR-55	614
BR-66	123A
BR67	123A
BR81D	166
BR-82	159
BR82D	167
BR84D	168
BR86D	169
BR88D	170
BR90A	5312
BR91A	5312
BR92A	5313
BR94A	5314
BR96A	5315
BR98A	5316
BR100	6408
BR100B	186
BR101B	152
BR103	5400
BR-832	159
BR51400-1	116
BR51401-2	116
BRC-116	130
BRC5296	152

To Be Replaced	ECG Replacement
BRC-5496	196
BRC6109	197
BRN-SPEC-24-12	519
BRX44	5400
BRX45	5401
BRX46	5402
BRX47	5404
BRX48	5405
BRX49	5405
BRY41-50	5640
BRY41-100	5640
BRY41-200	5641
BRY41-300	5642
BRY41-400	5642
BRY41-500	5643
BRY41-600	5643
BRY45-50	5640
BRY45-100	5640
BRY45-200	5641
BRY45-300	5642
BRY45-400	5642
BRY45-500	5643
BRY45-600	5643
BRY55-30	5400
BRY55-60	5401
BRY55-100	5402
BRY55-200	5404
BRY55-300	5405
BRY4150	5640
BRY4550	5640
BRY41100	5640
BRY41200	5641
BRY41300	5642
BRY41400	5642
BRY41500	5643
BRY41600	5643
BRY45100	5640
BRY45200	5641
BRY45300	5642
BRY45400	5642
BRY45500	5643
BRY45600	5643
BS08H	5651
BS-1	167
BS1	116
BS2	116
BS6-01A	5673
BS6-02A	5673
BS6-03A	5675
BS6-04A	5675
BS6-05A	5676
BS6-06A	5677
BS7-02A	56004
BS7-04A	56006
BS7-05A	56008
BS7-06A	56008
BS7-07A	56010
BS7-08A	56010
BS8-01A	5673
BS8-02A	5673
BS8-03A	5675
BS8-04A	5675
BS8-05A	5676
BS8-06A	5677
BS9-02A	56004
BS9-04A	56006
BS9-05A	56008
BS9-06A	56008
BS9-07A	56010
BS9-08A	56010
BS10-01A	5673
BS10-02A	5673
BS10-03A	5675
BS10-04A	5675
BS10-05A	5676
BS10-06A	5677
BS-60	172
BS-66	123A
BS67	123A
BS-94	123A
BS475	123A
BS9011G	123A
BSA01	177
BSA02	177
BSA11	177
BSS10	123A
BSS13	278
BSS14	282
BSS15	282
BSS16	282
BSS17	129
BSS18	129
BSS19	171
BSS20	171
BSS21	123A
BSS23	192
BSS26	108
BSS28	278
BSS29	278
BSS42	282
BSS43	282
BSS44	282
BStC0106	5482
BStC0113	5483
BStC0126	5485
BStC0133	5486
BStC0140	5487
BSTC0313	5524
BSTC0326	5527
BSTC0340	5529
BSTC0353	5531
BStC0626S6t	231
BStC0626S9t	231
BStC0626t	230
BStC0633S6t	231

To Be Replaced	ECG Replacement
BStC0633S9t	231
BStC0633t	230
BStC0640t	230
BStCC0126S6t	310
BStCC0126t	310
BStCC0133S6t	310
BStCC0133t	310
BStCC0140S6t	310
BStCC0140t	310
BStCC0146S6t	310
BStCC0146t	310
BSTD0313	5524
BSTD0326	5527
BSTD0340	5529
BSTD0353	5531
BSV15	129
BSV16	129
BSV21	159
BSV21A	159
BSV35	108
BSV35A	123A
BSV35B	108
BSV35C	108
BSV35D	108
BSV40	123A
BSV41	123A
BSV43A	159
BSV43B	193
BSV44A	159
BSV44B	193
BSV45A	159
BSV45B	193
BSV47A	159
BSV47B	193
BSV48A	159
BSV48B	193
BSV49A	159
BSV49B	193
BSV51	128
BSV52	108
BSV52R	108
BSV53	123A
BSV53P	107
BSV54	123A
BSV54P	107
BSV55A	159
BSV55AP	159
BSV55P	159
BSV59	123A
BSV60	186
BSV69	128
BSV82	129
BSV83	129
BSV84	123A
BSV86	123A
BSV87	123A
BSV88	123A
BSV89	123A
BSV90	123A
BSV91	123A
BSV95	278
BSV96	159
BSV97	159
BSV98	159
BSW10	128
BSW11	123A
BSW12	123A
BSW19	123A
BSW21	159
BSW21A	159
BSW-21A	159
BSW22	159
BSW-22	159
BSW22A	159
BSW-22A	159
BSW23	129
BSW24	159
BSW-24	159
BSW26	128
BSW27	128
BSW28	128
BSW29	128
BSW32	154
BSW33	123A
BSW34	123A
BSW35	128
BSW39	123A
BSW40	129
BSW41	123A
BSW42	123A
BSW42A	123A
BSW43	123A
BSW43A	123A
BSW44	159
BSW-44	159
BSW44A	159
BSW-44A	159
BSW45	159
BSW-45	159
BSW45A	159
BSW-45A	159
BSW51	123A
BSW52	123A
BSW53	123A
BSW58	123A
BSW65	128
BSW66	128
BSW67	190
BSW68	190
BSW-68	198
BSW69	154
BSW70	154
BSW72	159
BSW-72	159
BSW73	159

To Be Replaced	ECG Replacement
BSW-73	159
BSW74	159
BSW-74	159
BSW75	159
BSW-75	159
BSW82	123A
BSW83	123A
BSW84	123A
BSW85	123A
BSW88	123A
BSW89	123A
BSW92	123A
BSX12	108
BSX12A	128
BSX19	123A
BSX20	123A
BSX21	154
BSX22	128
BSX23	128
BSX24	123A
BSX25	123A
BSX26	108
BSX27	108
BSX28	108
BSX29	106
BSX30	123A
BSX32	195A
BSX33	128
BSX35	108
BSX36	159
BSX38	123A
BSX39	123A
BSX40	129
BSX41	129
BSX44	123A
BSX45	128
BSX45-6	128
BSX45-10	128
BSX45-16	128
BSX46	128
BSX46-6	128
BSX46-10	128
BSX46-16	128
BSX48	123A
BSX49	123A
BSX51	123A
BSX51A	123A
BSX52	123A
BSX52A	123A
BSX53	123A
BSX54	123A
BSX59	195A
BSX60	128
BSX61	128
BSX62	128
BSX62-10	128
BSX62-16	282
BSX62B	128
BSX62C	128
BSX62D	128
BSX63	128
BSX63-10	282
BSX63-16	282
BSX63B	128
BSX63C	128
BSX66	123A
BSX67	123A
BSX68	123A
BSX69	123A
BSX70	128
BSX71	128
BSX72	128
BSX75	123A
BSX76	123A
BSX77	123A
BSX78	123A
BSX79	123A
BSX80	123A
BSX81	123A
BSX87	123A
BSX87A	108
BSX88	108
BSX88A	108
BSX89	123A
BSX90	123A
BSX91	123A
BSX92	108
BSX93	108
BSX94A	123A
BSX95	128
BSX96	128
BSX97	123A
BSY10	123
BSY11	123
BSY17	123A
BSY18	123A
BSY19	123A
BSY20	123A
BSY21	123A
BSY22	108
BSY23	108
BSY24	123
BSY25	128
BSY26	123A
BSY27	123A
BSY28	123A
BSY29	123A
BSY34	123A
BSY38	123A
BSY39	123A
BSY40	159
BSY-40	159
BSY41	159
BSY-41	159
BSY44	128

To Be Replaced	ECG Replacement
BSY45	128
BSY46	128
BSY48	123A
BSY49	123A
BSY51	128
BSY52	128
BSY53	128
BSY54	128
BSY55	128
BSY56	128
BSY58	123A
BSY59	123A
BSY61	123A
BSY62	123A
BSY-62	108
BSY62A	123A
BSY62B	192
BSY63	123A
BSY70	108
BSY71	128
BSY72	108
BSY-72	108
BSY73	123A
BSY-73	108
BSY74	123A
BSY-74	108
BSY75	123A
BSY76	123A
BSY77	128
BSY78	128
BSY79	128
BSY80	123A
BSY-80	108
BSY81	128
BSY82	128
BSY83	128
BSY84	128
BSY85	128
BSY86	128
BSY87	128
BSY88	128
BSY89	123A
BSY90	128
BSY91	128
BSY92	128
BSY93	123A
BSY95	123A
BSY-95	108
BSY95A	123A
BSY165	123A
BSY168	123A
BT32	6408
BT67	123A
BT71	123A
BT-94	123A
BT100A-300R	5456
BT101-300R	5484
BT101-500R	5486
BT102-300R	5484
BT102-500R	5486
BT107	5486
BT108	5486
BT121	230
BT832	159
BT930	108
BTB1000	156
BTD0105	5640
BTD0110	5640
BTD0120	5641
BTD0130	5642
BTD0140	5642
BTD0150	5643
BTD0160	5643
BTD0205	5640
BTD0210	5640
BTD0220	5641
BTD0230	5642
BTD0240	5642
BTD0250	5643
BTD0260	5643
BTM50	116
BTM-50	5800
BTM1000	156
BTU0305	5673
BTU0310	5673
BTU0320	5673
BTU0330	5675
BTU0340	5677
BTU0350	5676
BTU0360	5677
BTU0405	5660
BTU0410	5662
BTU0420	5663
BTU0430	5664
BTU0440	5665
BTU0450	5666
BTU0460	5667
BTU0505	5673
BTU0510	5673
BTU0520	5673
BTU0530	5675
BTU0535	5677
BTU0540	5675
BTU0550	5676
BTU0560	5677
BTU0605	5681
BTU0610	5682
BTU0620	5683
BTU0630	5684
BTU0640	5685
BTU0650	5686
BTU0660	5697
BTU650	5686
BTU3605	5697
BTW13-50	5673

To Be Replaced	ECG Replacement
BTW13-100	5673
BTW13-200	5673
BTW13-300	5675
BTW13-400	5675
BTW13-500	5676
BTW13-600	5677
BTW16-50	5673
BTW16-100	5673
BTW16-200	5673
BTW16-300	5675
BTW16-400	5675
BTW16-500	5676
BTW16-600	5677
BTW19-50	5673
BTW19-100	5673
BTW19-200	5673
BTW19-300	5675
BTW19-400	5675
BTW19-500	5676
BTW19-600	5677
BTW20-50	5681
BTW20-100	5682
BTW20-200	5683
BTW20-300	5684
BTW20-400	5685
BTW20-500	5686
BTW20-600	5697
BTW1350	5673
BTW1650	5673
BTW1950	5673
BTW2050	5681
BTW13100	5673
BTW13200	5673
BTW13300	5675
BTW13400	5675
BTW13500	5676
BTW13600	5677
BTW16100	5673
BTW16200	5673
BTW16300	5675
BTW16400	5675
BTW16500	5676
BTW16600	5677
BTW19100	5673
BTW19200	5673
BTW19300	5675
BTW19400	5675
BTW19500	5676
BTW19600	5677
BTW20100	5682
BTW20200	5683
BTW20300	5684
BTW20400	5685
BTW20500	5686
BTW20600	5697
BTX068	123A
BTX-068	199
BTX070	102A
BTX-070	123A
BTX071	103A
BTX-071	129
BTX-084	234
BTX-094	123A
BTX-095	123A
BTX-096	123A
BTX-097	129
BTX31-50R	5491
BTX31-100R	5491
BTX31-200R	5492
BTX31-300R	5494
BTX31-400R	5494
BTX31-500R	5496
BTX31-600R	5496
BTX32-50R	5501
BTX32-100R	5502
BTX32-200R	5504
BTX32-300R	5506
BTX32-400R	5507
BTX32-500R	5508
BTX33-50R	5541
BTX33-100R	5542
BTX33-200R	5543
BTX33-300R	5544
BTX33-400R	5545
BTX33-500R	5546
BTX33-600R	5547
BTX68-500R	5496
BTX68-600R	5496
BTX75/100R	5522
BTX75/200R	5524
BTX75/300R	5526
BTX75/400R	5527
BTX76/100R	5542
BTX76/200R	5543
BTX76/300R	5544
BTX76/400R	5545
BTX81-100R	5542
BTX81/100R	5542
BTX81-200R	5543
BTX81/200R	5543
BTX81-300R	5544
BTX81-400R	5545
BTX81/400R	5545
BTX81-500R	5546
BTX81/500R	5546
BTX81-600R	5547
BTX81/600R	5547
BTX94-200	5693
BTX94-400	5695
BTX94-600	5697
BTX-2367B	123A
BTX2367B	123A
BTY34/100R	5491
BTY34/200R	5492
BTY34/300R	5494

To Be Replaced	ECG Replacement
BTY34/400R	5494
BTY87-100R	5502
BTY87-200R	5504
BTY87-300R	5506
BTY87-400R	5507
BTY87-500R	5508
BTY87-600R	5529
BTY87-700R	5530
BTY87-800R	5531
BTY91-100R	5522
BTY91-200R	5524
BTY91-300R	5526
BTY91-400R	5527
BTY91-500R	5528
BTY91-600R	5529
BTY91-700R	5530
BTY91-800R	5531
BU029	117(4)
BU67	123A
BU71	123A
BU102	283
BU104	283
BU105	165
BU106	162
BU107	162
BU108	165
BU109	163A
BU110	162
BU111	163A
BU113	283
BU115	165
BU120	162
BU126	283
BU129	283
BU133	283
BU205	165
BU207A	163A
BU208	165
BU310	327
BU311	327
BU312	327
BU326	283
BU326A	283
BU500	238
BUC 97704-2	123A
BUW74	283
BUW75	283
BUW76	283
BUX10	327
BUX11	327
BUX12	327
BUX13	283
BUX14	283
BUX16	283
BUX16A	283
BUX16B	283
BUX16C	283
BUX17	283
BUX17A	283
BUX17B	283
BUX17C	283
BUX39	327
BUX40	327
BUX67	369
BUX67A	369
BUX67B	369
BUX67C	369
BUY10	130
BUY11	130
BUY20	162
BUY21	162
BUY21A	162
BUY22	162
BUY24	152
BUY35	162
BUY38	175
BUY43	181
BUY44	162
BUY46	181
BUY51A	327
BUY52A	327
BUY53A	327
BUY54A	327
BUY69	283
BUY69B	283
BUY69C	283
BUY70B	283
BUY70C	283
BV25	116
BV67	123A
BV71	123A
BW67	123A
BW71	123A
BWS66	198
BWS67	198
BX090	139A
BX67	123A
BX71	123A
BX-324	158
BX-495	158(2)
BX495(Sony)	158(2)
BX909	139A
BXY10	125
BXY63	139A
BY12 00	125
BY67	123A
BY71	123A
BY100	125
BY100S	125
BY101	116
BY102	116
BY103	506
BY104	125
BY105	125
BY106	116

To Be Replaced	ECG Replacement
BY107	116
BY108	125
BY109	125
BY111	116
BY112	116
BY113	116
BY114	116
BY115	116
BY116	116
BY117	116
BY118	125
BY119	125
BY121	116
BY122	166
BY123	167
BY124	116
BY125	116
BY126	116
BY126/50	156
BY126/100	156
BY126/200	156
BY126/300	156
BY126/400	156
BY127	506
BY127/500	125
BY127/600	125
BY127/700	125
BY128	125
BY129	125
BY130	116
BY133	506
BY134	116
BY135	116
BY141	116
BY153	116
BY156	156
BY157	506
BY158	506
BY159-50	5304
BY159-200	5304
BY159-400	5304
BY159(BRIDGE)	5304
BY164	166
BY172	156
BY173	156
BY179	168
BY201	5830
BY201-2	5832
BY202	5832
BY203	5834
BY204	5836
BY205	5838
BY206	5840
BY207	5842
BY208	5846
BY209	5846
BY211	5830
BY212	5832
BY213	5834
BY214	5836
BY215	5838
BY216	5840
BY217	5842
BY218	5846
BY219	5846
BY221	5830
BY222	5832
BY223	5834
BY224	5836
BY225	5838
BY226	5840
BY227	5842
BY228	5846
BY229	5846
BY301	5830
BY302	5832
BY303	5834
BY304	5836
BY305	5838
BY306	5840
BY307	5842
BY308	5846
BY309	5846
BY311	5830
BY312	5832
BY313	5834
BY314	5836
BY315	5838
BY316	5840
BY317	5842
BY318	5846
BY319	5846
BY321	5830
BY322	5832
BY323	5834
BY324	5836
BY325	5838
BY326	5840
BY327	5842
BY328	5846
BY329	5846
BY401	5850
BY402	5852
BY403	5854
BY404	5856
BY405	5858
BY406	5860
BY407	5862
BY408	5866
BY409	5866
BY411	5850
BY412	5852
BY413	5854
BY414	5856
BY415	5858

To Be Replaced	ECG Replacement
BY416	5860
BY417	5862
BY418	5866
BY419	5866
BY421	5850
BY422	5852
BY423	5854
BY424	5856
BY425	5858
BY426	5860
BY427	5862
BY428	5866
BY429	5866
BY501	5870
BY502	5872
BY503	5874
BY504	5876
BY505	5878
BY506	5880
BY507	5882
BY508	5886
BY509	5886
BY511	5870
BY512	5872
BY513	5874
BY514	5876
BY515	5878
BY516	5880
BY517	5882
BY518	5886
BY519	5886
BY521	5870
BY522	5872
BY523	5874
BY524	5876
BY525	5878
BY526	5880
BY527	5882
BY528	5886
BY529	5886
BY701	5850
BY702	5852
BY703	5854
BY704	5856
BY705	5858
BY706	5860
BY707	5862
BY708	5866
BY709	5866
BY711	5850
BY712	5852
BY713	5854
BY714	5856
BY715	5858
BY716	5860
BY717	5862
BY718	5866
BY719	5866
BY721	5850
BY722	5852
BY723	5854
BY724	5856
BY725	5858
BY726	5860
BY727	5862
BY728	5866
BY729	5866
BY801	5870
BY802	5872
BY803	5874
BY804	5876
BY805	5878
BY806	5880
BY807	5882
BY808	5886
BY809	5886
BY811	5870
BY812	5872
BY813	5874
BY814	5876
BY815	5878
BY816	5880
BY817	5882
BY818	5886
BY819	5886
BY821	5870
BY822	5872
BY823	5874
BY824	5876
BY825	5878
BY826	5880
BY827	5882
BY828	5886
BY829	5886
BY1001	125
BY1002	125
BY1101	125
BY1102	125
BY1201	125
BY1202	125
BY2001	5848
BY2002	5848
BY2101	5848
BY2102	5848
BY2201	5848
BY2202	5848
BY3001	5848
BY3002	5848
BY3101	5848
BY3102	5848
BY3201	5848
BY3202	5848
BY4001	5868
BY4002	5868
BY4101	5868

To Be Replaced	ECG Replacement
BY4102	5868
BY4201	5868
BY4202	5868
BY5001	5890
BY5002	5890
BY5101	5890
BY5102	5890
BY5201	5890
BY5202	5890
BY7001	5868
BY7002	5868
BY7101	5868
BY7102	5868
BY7201	5868
BY7202	5868
BY8001	5890
BY8002	5890
BY8101	5890
BY8102	5890
BY8201	5890
BY8202	5890
BYX10	125
BYX12/400	125
BYX13/600	125
BYX13/1000	5999
BYX15	5999
BYX16	5998
BYX22/200	116
BYX22/400	116
BYX22/600	116
BYX22/800	125
BYX22-1200	506
BYX25-600	5924
BYX25-600R	5925
BYX25-800	5928
BYX25-800R	5929
BYX25-1000	5932
BYX25-1000R	5933
BYX26-60	156
BYX30/150	5802
BYX36-150	156
BYX36/150	116
BYX36-300	116
BYX36/300	116
BYX36-600	116
BYX36/600	116
BYX38	156
BYX38/300	5836
BYX38-300	5898
BYX38/300R	5835
BYX38-300R	5899
BYX38/600	5842
BYX38-600	5904
BYX38/600R	5839
BYX38-600R	5905
BYX38/900	5848
BYX38-900	5910
BYX38/900R	5843
BYX38-900R	5911
BYX38/1200	5846
BYX38/1200R	5847
BYX39-600	5862
BYX39/600	5882
BYX39-600R	5863
BYX39-800	5866
BYX39/800	5886
BYX39-800R	5867
BYX39-1000	5868
BYX39/1000	5890
BYX39-1000R	5869
BYX40-600	5882
BYX40-600R	5883
BYX40-800	5886
BYX40-800R	5887
BYX40-1000	5890
BYX40-1000R	5891
BYX42-300	5876
BYX42/300	5878
BYX42-300R	5877
BYX42-600	5882
BYX42/600	5882
BYX42-600R	5883
BYX42-900	5890
BYX42/900	5890
BYX42-900R	5891
BYX45-600R	156
BYX45-800R	156
BYX45-1000R	156
BYX46-200	5896
BYX46-200R	5897
BYX46-300	5898
BYX46-300R	5899
BYX46-400	5900
BYX46-400R	5901
BYX46-500	5902
BYX46-500R	5903
BYX46-600	5904
BYX46-600R	5905
BYX48-300	5876
BYX48/300	5878
BYX48-300R	5857
BYX48-600	5882
BYX48/600	5882
BYX48-600R	5863
BYX48-900	5890
BYX48/900	5890
BYX48-900R	5869
BYX50-200	5854
BYX50-200R	5855
BYX50-300	5856
BYX50-300R	5857
BYX50-400	5858
BYX50-400R	5859
BYX50-500	5860
BYX50-500R	5861

To Be Replaced	ECG Replacement
BYX50-600	5862
BYX50-600R	5863
BYX52-300	5988
BYX52-300R	5989
BYX52-600	5994
BYX52-600R	5995
BYX52-900	6002
BYX52-900R	6003
BYX56-600	5994
BYX56-600R	5995
BYX56-800	5998
BYX56-800R	5999
BYX56-1000	6002
BYX56-1000R	6003
BYX57-500	506
BYX57-600	506
BYX58-50	177
BYX58-100	177
BYX58-200	177
BYX60-50	116
BYX60-100	116
BYX60-200	116
BYX60-300	116
BYX60-400	116
BYX60-500	116
BYX60-600	116
BYX60-700	125
BYX61-50	5892
BYX61-100	5894
BYX61-300	5898
BYX61-400	5900
BYX62-600	5904
BYX66-400	5900
BYX66-600	5904
BYX66-800	5908
BYX66-1000	5910
BYX38900	5882
BYX39600	5882
BYX40600	5882
BYX42600	5882
BYX48600	5882
BYY31	116
BYY-31	116
BYY32	116
BYY-32	116
BYY33	116
BYY34	116
BYY35	116
BYY-35	116
BYY36	116
BYY37	125
BYY60	156
BYY61	156
BYY88	5874
BYY89	116
BYY91	125
BYZ13	5944
BZ-050	135A
BZ-052	136A
BZ-054	136A
BZ-056	136A
BZ-058	5070A
BZ-061	137A
BZ061	137A
BZ-063	137A
BZ-065	5071A
BZ-067	5071A
BZ-069	5071A
BZ-071	138A
BZ071	138A
BZ-073	138A
BZ-075	138A
BZ075	138A
BZ-077	5072A
BZ-079	5072A
BZ080	5072A
BZ080	5072A
BZ-080	5072A
BZ081	5072A
BZ-081	5072A
BZ-083	5072A
BZ085	5072A
BZ-085	5073A
BZ-088	5073A
BZ-090	139A
BZ090	139A
BZ-090(zener)	139A
BZ090.1Z9	139A
BZ-092	139A
BZ-094	139A
BZ094	139A
BZ-096	140A
BZ-098	140A
BZ-0800	5072A
BZ-0900	139A
BZ-0901	139A
BZ1-9	139A
BZ3.6	134A
BZ3.9	5067A
BZ4.3	5068A
BZ4.7	5069A
BZ5.1	135A
BZ5.6	136A
BZ6.2	137A
BZ6.8	5071A
BZ7.5	138A
BZ8.2	5072A
BZ9.1	139A
BZ-12	142A
BZ16C16	5131A
BZ61C4V3	5114A
BZ63C6V8	5071A
BZ67	123A
BZ71	123A

To Be Replaced	ECG Replacement
BZ79C10	140A
BZ/88/C4V7	135A
BZ90	139A
BZ100	140A
BZ102-2V8	5003A
BZ102-3V4	5005A
BZ-105	5074A
BZ110	5074A
BZ-110	5074A
BZ110	5074A
BZ-115	141A
BZ-120	142A
BZ120	142A
BZ-125	143A
BZ-130	143A
BZ130	143A
BZ-135	144A
BZ-140	144A
BZ140	144A
BZ-145	145A
BZ-150	145A
BZ150	145A
BZ-157	5075A
BZ162	5075A
BZ-162	5075A
BZ162	5075A
BZ-162	5075A
BZ-167	5076A
BZ-172	5076A
BZ177	5077A
BZ-177	5077A
BZ-182	5077A
BZ-187	5078A
BZ192	5078A
BZ-192	5078A
BZ-197	5079A
BZ210	5079A
BZ-210	5079A
BZ-220	5080A
BZ230	5080A
BZ-230	5081A
BZ-240	5081A
BZ240	5081A
BZ-250	5082A
BZ260	146A
BZ-260	146A
BZ-270	146A
BZ270	146A
BZ-280	5083A
BZ290	5084A
BZ-290	5084A
BZ-300	5084A
BZ310	5084A
BZ-310	147A
BZ-320	147A
BZ-330	147A
BZ-340	5085A
BZ-350	5085A
BZ488C33	147A
BZ1021V4	177
BZ-090	139A
BZ-X19	145A
BZ061	137A
BZ090	139A
BZS2.7	5002A
BZV15C18	5194A
BZV15C20	5196A
BZV15C22	5197A
BZV16C6V8	5120A
BZV16C7V5	5121A
BZV16C8V2	5122A
BZV16C9V1	5124A
BZV16C10	5125A
BZV16C11	5126A
BZV16C12	5127A
BZV16C13	5128A
BZV16C15	5130A
BZV16C18	5133A
BZV16C20	5135A
BZV16C22	5136A
BZV16C24	5137A
BZV16C27	5139A
BZV16C30	5141A
BZV16C33	5142A
BZV16C36	5143A
BZV16C39	5144A
BZV16C43	5145A
BZV16C47	5146A
BZV16C51	5147A
BZV16C56	5148A
BZV16C62	5150A
BZV16C68	5151A
BZV16C75	5152A
BZV16C82	5153A
BZV16C91	5155A
BZV16C100	5156A
BZV17C5V6	136A
BZV17C6V2	137A
BZV17C6V8	5071A
BZV17C7V5	138A
BZV17C8V2	5072A
BZV17C10	140A
BZV17C11	5074A
BZV17C12	142A
BZV17C13	143A
BZV17C15	145A
BZV17C16	5075A
BZV17C18	5077A
BZV17C20	5079A
BZV17C22	5080A
BZV17C24	5081A
BZV17C27	146A
BZV17C30	5084A
BZV17C33	147A
BZV17C36	5085A

To Be Replaced	ECG Replacement
BZV17C39	5086A
BZV17C43	5087A
BZV17C47	5088A
BZV17C51	5089A
BZV17C56	5090A
BZX10	137A
BZX13V	143A
BZX14	139A
BZX15V	145A
BZX17	142A
BZX19	145A
BZX25	146A
BZX25A	146A
BZX27	147A
BZX29C4V7	5069A
BZX29C5V1	135A
BZX29C5V6	136A
BZX29C6V2	137A
BZX29C6V8	5071A
BZX29C7V5	138A
BZX29C8V2	5072A
BZX29C9V1	139A
BZX29C10	140A
BZX29C11	5074A
BZX29C12	142A
BZX29C13	143A
BZX29C15	145A
BZX29C16	5075A
BZX29C18	5077A
BZX29C20	5079A
BZX29C22	5080A
BZX29C24	5081A
BZX29C27	146A
BZX29C30	5084A
BZX29C33	147A
BZX29C36	5085A
BZX29C39	5086A
BZX29C43	5087A
BZX29C47	5088A
BZX29C51	5089A
BZX29C56	5090A
BZX29C62	149A
BZX29C82	150A
BZX46C2V7	5063A
BZX46C3V0	5065A
BZX46C3V3	5066A
BZX46C3V6	134A
BZX46C3V9	5067A
BZX46C4V3	5068A
BZX46C4V7	5069A
BZX46C5V1	5010A
BZX46C5V6	136A
BZX46C6V2	137A
BZX46C6V8	5071A
BZX46C7V5	138A
BZX46C8V2	5072A
BZX46C9V1	139A
BZX46C10	140A
BZX46C11	5074A
BZX46C12	142A
BZX46C13	143A
BZX-46C15	145A
BZX46C15	145A
BZX46C16	5075A
BZX46C18	5077A
BZX46C20	5079A
BZX46C22	5080A
BZX46C24	5081A
BZX46C27	146A
BZX46C30	5084A
BZX46C33	147A
BZX46C36	5085A
BZX46C39	5038A
BZX46C43	5087A
BZX46C47	5088A
BZX46C51	5089A
BZX46C56	5090A
BZX46C62	149A
BZX46CV2	137A
BZX55C2V4	5061A
BZX55C2V7	5063A
BZX55C3V0	5065A
BZX55C3V3	5066A
BZX55C3V6	5006A
BZX55C3V9	5067A
BZX55C4V3	5068A
BZX55C4V7	5069A
BZX55C5V6	136A
BZX55C6V2	137A
BZX55C6V8	5071A
BZX55C7V5	138A
BZX55C8V2	5072A
BZX55C9V1	139A
BZX55C10	140A
BZX55C11	5074A
BZX55C12	142A
BZX55C13	5075A
BZX55C15	145A
BZX55C16	5075A
BZX55C18	5077A
BZX55C20	5079A
BZX55C22	5079A
BZX55C24	5079A
BZX55C27	5079A
BZX55C30	5079A
BZX55C33	5085A
BZX55C36	5086A
BZX55C39	5087A
BZX55C43	5087A
BZX55C47	5088A
BZX55C56	5090A
BZX55C62	149A
BZX55C68	5092A
BZX55C75	5093A
BZX55C82	150A

To Be Replaced	ECG Replacement
BZX55C91	5095A
BZX55C100	5096A
BZX55C110	151A
BZX55C120	5097A
BZX55C130	5098A
BZX55C150	5100A
BZX55C160	5101A
BZX55C180	5103A
BZX55C200	5105A
BZX55D5V6	5117A
BZX55D6V8	5120A
BZX55D8V2	5122A
BZX55D10	5125A
BZX58C6V8	5071A
BZX58C7V5	138A
BZX58C8V2	5072A
BZX58C10	140A
BZX59C11	5074A
BZX59C12	142A
BZX59C13	143A
BZX59C15	145A
BZX59C16	5075A
BZX59C18	5077A
BZX59C20	5079A
BZX59C22	5080A
BZX59C24	5081A
BZX59C27	146A
BZX60C30	5084A
BZX60C33	147A
BZX60C36	5085A
BZX60C39	5086A
BZX60C43	5087A
BZX60C47	5088A
BZX60C51	5089A
BZX60C56	5090A
BZX61C3V6	5112A
BZX61C3V9	5113A
BZX61C4V7	5115A
BZX61C5V1	5116A
BZX61C5V6	5117A
BZX61C6V2	5119A
BZX61C6V8	5120A
BZX61C7V5	5121A
BZX61C8V2	5122A
BZX61C9V1	5124A
BZX61C10	5125A
BZX61C11	5126A
BZX61C12	5127A
BZX61C13	5128A
BZX61C15	5130A
BZX61C16	5131A
BZX61C18	5133A
BZX61C20	5135A
BZX61C22	5136A
BZX61C24	5137A
BZX61C27	5139A
BZX61C30	5141A
BZX61C33	5142A
BZX61C36	5143A
BZX61C39	5144A
BZX61C43	5145A
BZX61C47	5146A
BZX61C51	5147A
BZX61C56	5148A
BZX61C62	5150A
BZX61C68	5151A
BZX61C75	5152A
BZX63C7V5	138A
BZX63C8V2	5072A
BZX63C9V1	139A
BZX63C10	140A
BZX64C11	5074A
BZX64C12	142A
BZX64C13	143A
BZX64C15	145A
BZX64C16	5075A
BZX64C18	5077A
BZX64C20	5079A
BZX64C22	5080A
BZX64C24	5081A
BZX64C27	146A
BZX65C30	5084A
BZX65C33	147A
BZX65C36	5085A
BZX65C39	5086A
BZX65C43	5087A
BZX65C47	5088A
BZX65C51	5089A
BZX65C56	5090A
BZX66	5071A
BZX69C7V5	138A
BZX69C8V2	5072A
BZX69C10	140A
BZX69C11	5074A
BZX69C12	142A
BZX70C7V5	5121A
BZX70C8V2	5122A
BZX70C9V1	5124A
BZX70C10	5125A
BZX70C11	5126A
BZX70C12	5127A
BZX70C13	5128A
BZX70C15	5130A
BZX70C16	5131A
BZX70C18	5133A
BZX70C20	5135A
BZX70C22	5136A
BZX70C24	5137A
BZX70C27	5139A
BZX70C30	5141A
BZX70C33	5142A
BZX70C36	5143A
BZX70C39	5144A
BZX70C43	5145A
BZX70C47	5146A

To Be Replaced	ECG Replacement
BZX70C51	5147A
BZX70C56	5148A
BZX70C62	5150A
BZX70C68	5151A
BZX70C75	5152A
BZX71C5V1	5010A
BZX71C5V6	5011A
BZX71C6V2	5013A
BZX71C6V8	5014A
BZX71C7V5	5015A
BZX71C8V2	5016A
BZX71C9V1	139A
BZX71C9V2	5018A
BZX71C10	5019A
BZX71C11	5020A
BZX71C12	5021A
BZX71C13	5022A
BZX71C15	5024A
BZX-71C15	145A
BZX71C16	5025A
BZX71C18	5027A
BZX71C20	5029A
BZX71C22	5030A
BZX71C24	5031A
BZX72	5018A
BZX72A	5018A
BZX72B	5018A
BZX72C	5018A
BZX75C2V8	5064A
BZX75C3V6	134A
BZX76	143A
BZX79B16	5075A
BZX79C4V7	5069A
BZX79C5	5093A
BZX79C5V1	5010A
BZX79C5V6	136A
BZX79C6V2	137A
BZX79C6V8	5071A
BZX79C7V5	138A
BZX79C8V2	5072A
BZX79C9V1	139A
BZX79C10	140A
BZX79C11	5074A
BZX79C12	142A
BZX79C13	143A
BZX79C13V	143A
BZX79C15	5024A
BZX-79C15	145A
BZX79C16	5075A
BZX79C18	5077A
BZX79C20	5079A
BZX79C22	5080A
BZX79C24	5081A
BZX79C27	146A
BZX79C27A	146A
BZX79C30	5084A
BZX79C33	147A
BZX79C36	5085A
BZX79C39	5086A
BZX79C43	5087A
BZX79C47	5088A
BZX79C51	5089A
BZX79C56	5090A
BZX79C62	149A
BZX79C68	5092A
BZX79C75	5046A
BZX80C6V8	5071A
BZX80C7V5	138A
BZX80C8V2	5072A
BZX80C9V1	139A
BZX80C10	140A
BZX81C11	5074A
BZX81C13	143A
BZX81C15	145A
BZX81C16	5075A
BZX81C18	5077A
BZX81C20	5079A
BZX81C22	5080A
BZX81C24	5081A
BZX81C27	146A
BZX82C9	5086A
BZX82C30	5084A
BZX82C33	147A
BZX82C36	5085A
BZX82C43	5087A
BZX82C47	5088A
BZX82C51	5089A
BZX82C56	5090A
BZX83C2V4	5061A
BZX83C2V7	5063A
BZX83C3V0	5065A
BZX83C3V3	5066A
BZX83C3V6	5006A
BZX83C3V9	5007A
BZX83C4V3	5008A
BZX83C4V7	5069A
BZX83C5V1	5010A
BZX83C5V6	136A
BZX83C6V2	137A
BZX83C6V8	5071A
BZX83C7V5	138A
BZX83C8V2	5072A
BZX83C9V1	5018A
BZX83C10	140A
BZX83C11	5074A
BZX83C12	142A
BZX83C13	143A
BZX83C15	145A
BZX83C16	5075A
BZX83C18	5077A
BZX83C20	5079A
BZX83C22	5080A
BZX83C24	5081A
BZX83C27	146A
BZX83C30	5084A

To Be Replaced	ECG Replacement
BZX83C33	147A
BZX83C36	5085A
BZX83C39	5086A
BZX83C43	5087A
BZX83C47	5088A
BZX83C51	5089A
BZX83C56	5090A
BZX83C62	149A
BZX83CV9	5067A
BZX84C5V6	136A
BZX84C6V2	137A
BZX84C6V8	5071A
BZX85C2V7	5063A
BZX85C3V0	5065A
BZX85C3V3	5066A
BZX85C3V6	134A
BZX85C3V9	5067A
BZX85C4V3	5068A
BZX85C4V7	5069A
BZX85C5V6	136A
BZX85C6V2	137A
BZX85C6V8	5071A
BZX85C7V5	138A
BZX85C8V2	5072A
BZX85C9V1	139A
BZX85C10	140A
BZX85C11	5074A
BZX85C12	142A
BZX85C13	143A
BZX85C15	145A
BZX85C16	5075A
BZX85C18	5077A
BZX85C20	5079A
BZX85C22	5080A
BZX85C24	5081A
BZX85C27	146A
BZX85C30	5084A
BZX85C33	147A
BZX85C36	5085A
BZX85C39	5086A
BZX85C43	5087A
BZX85C47	5146A
BZX85C51	5147A
BZX85C56	5148A
BZX85C62	5150A
BZX85C68	5151A
BZX85C75	5152A
BZX85C91	5155A
BZX85C100	5156A
BZX85C110	5157A
BZX85C120	5158A
BZX85C130	5159A
BZX85C150	5161A
BZX85C160	5162A
BZX85C180	5164A
BZX85C200	5166A
BZX85CV1	5116A
BZX87C12	5127A
BZX87C43	5145A
BZX88C4V7	5069A
BZX88C5V6	136A
BZX88C6V2	137A
BZX88C6V8	5071A
BZX89C7V5	138A
BZX89C8V2	5072A
BZX89C9V1	139A
BZX89C10	140A
BZX89C11	5074A
BZX89C12	142A
BZX94C62	149A
BZX96C2V7	5063A
BZX96C3	5065A
BZX96C3V3	5066A
BZX96C3V6	134A
BZX96C3V9	5067A
BZX96C4V3	5068A
BZX96C4V7	5069A
BZX96C5V6	136A
BZX96C6V2	137A
BZX96C6V8	5071A
BZX96C7V5	138A
BZX96C8V2	5072A
BZX96C9V1	139A
BZX96C10	140A
BZX96C11	5074A
BZX96C12	142A
BZX96C13	143A
BZX96C15	145A
BZX96C16	5075A
BZX96C18	5077A
BZX96C20	5079A
BZX96C22	5080A
BZX96C24	5081A
BZX96C27	146A
BZX96C30	5084A
BZX96C33	147A
BZX834V3	5068A
BZX4639	5086A
BZX5565V1	5010A
BZY18	142A
BZY19	145A
BZY-19	145A
BZY29C33	147A
BZY56	5069A
BZY57	5010A
BZY58	136A
BZY59	137A
BZY60	5071A
BZY61	138A
BZY62	5072A
BZY63	139A
BZY64	5008A
BZY65	5010A
BZY66	5013A
BZY67	5015A

To Be Replaced	ECG Replacement
BZY68	5018A
BZY69	5021A
BZY74	5180A
BZY75	5182A
BZY76	5185A
BZY78	5011A
BZY78P	5011A
BZY83C4V7	5069A
BZY83C5V1	5010A
BZY83/C5V6	136A
BZY83C5V6	136A
BZY83C6V2	137A
BZY83C6V8	5071A
BZY83C7V5	138A
BZY83C8V2	5072A
BZY83C9V1	5018A
BZY83/C10	140A
BZY83C10	140A
BZY83C11	5074A
BZY83C12	142A
BZY83C13V5	5022A
BZY83/C15	145A
BZY-83C15	145A
BZY83C15	145A
BZY83C16	145A
BZY83C16V5	5026A
BZY83C18	5077A
BZY83C20	5079A
BZY83C22	5080A
BZY83C24V5	5032A
BZY83/CV51	135A
BZY83D4V7	5009A
BZY83D5V6	5011A
BZY83/D5V6	136A
BZY83D6V8	5014A
BZY83D8V2	5016A
BZY83D10	5019A
BZY83/D10	140A
BZY83D12	5021A
BZY83D15	5024A
BZY83/D15	145A
BZY-83D15	145A
BZY83D18	5027A
BZY83D22	5030A
BZY84D5V6	5178A
BZY84D6V8	5181A
BZY84D8V2	5183A
BZY84D10	5185A
BZY84D12	5188A
BZY85B2V7	5002A
BZY85B3V3	5066A
BZY85B6V8	5071A
BZY85B7V5	138A
BZY85B8V2	5072A
BZY85B9V1	139A
BZY85C2V7	5063A
BZY85C3	5065A
BZY85C3V3	5066A
BZY85/C3V6	134A
BZY85C3V6	134A
BZY85C3V9	5067A
BZY85C4V3	5068A
BZY85C4V7	5069A
BZY85C5V1	5010A
BZY85C5V6	136A
BZY85C6V2	137A
BZY85C6V8	5071A
BZY85C7V5	138A
BZY85C8V2	5016A
BZY85C9V1	5018A
BZY85C10	140A
BZY85C11	5074A
BZY85C12	142A
BZY85C13	5022A
BZY85C13V5	143A
BZY85C15	145A
BZY85C16	5025A
BZY85C16V	5075A
BZY85C16V5	5026A
BZY85C18	5077A
BZY85C20	5079A
BZY85C22	5080A
BZY85C24	5081A
BZY85C24V5	5081A
BZY85C27	146A
BZY85C30	5084A
BZY85C33	5036A
BZY85D4V7	5009A
BZY85D5V6	5011A
BZY85D6V8	5014A
BZY85D8V2	5016A
BZY85D10	5019A
BZY85D12	5021A
BZY85D15	5024A
BZY85D18	5027A
BZY85D22	5030A
BZY87-2V8	5064A
BZY88/6V2	137A
BZY88C2V7	5063A
BZY88C3V0	5065A
BZY88C3V3	5063A
BZY88C3V6	5065A
BZY88C3V9	5066A
BZY88C4V3	134A
BZY88C4V7	5009A
BZY88C5V1	5010A
BZY88C5V6	5011A
BZY88C6V2	5012A
BZY88C6V8	5014A
BZY88C7V5	5015A
BZY88C8V2	5016A
BZY88C9V1	5018A
BZY88C10	5019A
BZY88C11	5020A
BZY88C12	5021A

To Be Replaced	ECG Replacement
BZY88C13	5022A
BZY88C15	5024A
BZY88C16	5025A
BZY88C18	5027A
BZY88C20	5029A
BZY88C22	5030A
BZY88C24	5031A
BZY88C30	5035A
BZY88C36	5085A
BZY92C3V9	5067A
BZY92C4V3	5068A
BZY92C4V7	5069A
BZY92C5V1	135A
BZY92C5V6	136A
BZY92C6V2	137A
BZY92C6V8	5071A
BZY92C7V5	138A
BZY92C8V2	5072A
BZY92C9V1	139A
BZY92C10	140A
BZY92C11	5074A
BZY92C12	142A
BZY92C13	143A
BZY92C15	145A
BZY92C16	5075A
BZY92C18	5077A
BZY92C20	5079A
BZY92C22	5080A
BZY92C24	5081A
BZY92C27	146A
BZY92C30	5084A
BZY92C33	147A
BZY92C36	5085A
BZY93C6V8	5247A
BZY93C7V5	5248A
BZY93C8V2	5249A
BZY93C9V1	5251A
BZY93C10	5252A
BZY93C11	5253A
BZY93C12	5254A
BZY93C13	5255A
BZY93C15	5257A
BZY93C16	5258A
BZY93C18	5260A
BZY93C20	5262A
BZY93C22	5263A
BZY93C24	5264A
BZY93C27	5266A
BZY93C30	5268A
BZY93C33	5269A
BZY93C36	5270A
BZY93C39	5271A
BZY93C43	5272A
BZY93C51	5276A
BZY93C56	5278A
BZY93C62	5280A
BZY93C68	5281A
BZY93C75	5282A
BZY94C10	5019A
BZY94C11	5020A
BZY94C12	5021A
BZY94C13	5022A
BZY94C15	5024A
BZY94C16	5025A
BZY94C18	5027A
BZY94C20	5029A
BZY94C22	5030A
BZY94C24	5031A
BZY94C27	5033A
BZY94C30	5035A
BZY94C33	5036A
BZY94C36	5037A
BZY94C39	5038A
BZY94C43	5039A
BZY94C47	5040A
BZY94C51	5041A
BZY94C56	5042A
BZY94C62	5044A
BZY94C68	5045A
BZY94C75	5046A
BZY95C10	5125A
BZY95C11	5126A
BZY95C12	5127A
BZY95C13	5128A
BZY95C15	5130A
BZY95C16	5131A
BZY95C18	5133A
BZY95C20	5135A
BZY95C22	5136A
BZY95C24	5137A
BZY95C27	5139A
BZY95C30	5141A
BZY95C33	5142A
BZY95C36	5143A
BZY95C39	5144A
BZY95C43	5145A
BZY95C47	5146A
BZY95C51	5147A
BZY95C56	5148A
BZY95C62	5150A
BZY95C68	5151A
BZY95C75	5152A
BZY96C4V7	5115A
BZY96C5V1	5116A
BZY96C5V6	5117A
BZY96C6V2	5119A
BZY96C6V8	5120A
BZY96C7V5	5121A
BZY96C8V2	5122A
BZY96C9V1	5124A
BZY96C10	5125A
BZY9513	5128A
BZYC24	5198A
BZZ10	5012A
BZZ11	5014A

To Be Replaced	ECG Replacement
BZZ12	5015A
BZZ13	5016A
BZZ14	5178A
BZZ15	5180A
BZZ16	5181A
BZZ17	5182A
BZZ18	5183A
BZZ19	5185A
BZZ20	5186A
BZZ21	5187A
BZZ22	5188A
BZZ23	5189A
BZZ24	5191A
BZZ25	5192A
BZZ26	5194A
BZZ27	5196A
BZZ28	5197A
BZZ29	5198A
C00 686 0241	159
C00686-0258-0	159
C00 68602300	123A
C0068602720	159
C02	5072A
C05-03C	113
C08P1	113
C08P1R	115
C0410	125
C0900P(HEP)	9662
C0901P(HEP)	9663
C0902P(HEP)	9668
C0903P(HEP)	9669
C0904P(HEP)	9670
C0905P(HEP)	9661
C0906P(HEP)	9664
C0907P(HEP)	9682
C0908P(HEP)	9681
C0909P(HEP)	9672
C0910P(HEP)	9665
C0911P(HEP)	9667
C0912P(HEP)	9663
C1-12	362
C1-12Z	362
C1-28	311
C1-1002	724
C1-1004	718
C1A	178MP
C1B	116
C1H	116
C1.0E02	125
C2AJ102	116
C-2C	506
C2.0E2	525
C3-4	5547
C3-12	363
C5-12	363
C6B3	5400
C-6BX212	6401
C7A4	5454
C9FF-10A580	128
C10	113
C10-02A	113
C10-1B	113
C10-12A	364
C10-13B	113
C10-15B	113
C10-15C	113
C10-16A	113
C10-18B	113
C-10-20A	178MP
C10-20A	178MP
C10-22C	178MP
C10-31A	113
C10-38C	113
C10-47B	113
C10A	5482
C10B	5483
C10C	5484
C10D	5485
C10F	5481
C10H	5484
C10U	5480
C11A	5482
C11A-U	5483
C11B	5483
C11C	5484
C11D	5485
C11E	5486
C11F	5481
C11G	5483
C11H	5484
C11M	5487
C11S1C1E1C	116
C11U	5480
C12-12	364
C12(Transistor)	128
C13(Transistor)	101
C14	101
C15-1	123A
C15-2	123A
C15-3	123A
C15A	5482
C15A-U	5483
C15B	5483
C15C	5484
C15D	5485
C15E	5486
C15F	5481
C15G	5483
C15H	5484
C15M	5487
C15(Transistor)	123A
C15U	5480
C16	123A
C16A	123A
C16A(IC)	1045

To Be Replaced	ECG Replacement
C16C(IC)	1045
C16(IC)	1045
C-16(IC)	1045
C17	108
C17A	108
C17C/D368(IC)	1047
C17C(IC)	1047
C17(IC)	1047
C18	123A
C19	128
C20	128
C20A	5491
C20A-U	5483
C20B	5492
C20C1(IC)	1075A
C20C2(IC)	1075A
C20C(IC)	1075A
C20D	5496
C20F	5491
C20U	5491
C21	130
C22	128
C23	128
C23C	1046
C23C(IC)	1046
C24	128
C26	123A
C27	128
C27C1(IC)	1124
C27C(IC)	1124
C28	123
C29	123
C-29C2	1089
C29C-2(IC)	1089*
C29C2(IC)	1089*
C29C3(IC)	1089*
C29C(IC)	1089*
C29CZ	1089
C30	128
C30-1	5547
C30-2	5547
C30-5	5547
C30A	5522
C30B	5524
C30C	5526
C30C(IC)	1049
C30D	5527
C30F	5521
C30U	5520
C31	128
C31A(IC)	1048
C31C	1048
C31C1(IC)	1048
C31C(IC)	1048
C31(IC)	1048
C32	128
C32A	128
C32C(IC)	1050
C33	123A
C34(Transistor)	103A
C35A	5542
C35B	5543
C35C	5544
C35D	5545
C35E	5546
C35F	5541
C35G	5543
C35H	5544
C35M	5547
C35(Transistor)	103A
C35U	5540
C36A	5502
C36B	5504
C36C	5506
C36D	5507
C36E	5508
C36F	5501
C36G	5503
C36H	5505
C36(Transistor)	101
C36U	5500
C37A	5522
C37B	5524
C37C	5526
C37D	5527
C37E	5528
C37F	5521
C37M	5529
C37N	5531
C37O	123A
C37 R-1	123A
C37S	5530
C37(Transistor)	123A
C37U	5520
C38A	5541
C38B	5543
C38C	5544
C38D	5545
C38E	5546
C38F	5541
C38G	5543
C38H	5544
C38M	5547
C38(Transistor)	123A
C38U	5540
C39-207	123A
C39A	108
C39(Transistor)	108
C40	108
C41	163A
C41C(IC)	1093
C41TV	163A
C42	162
C42A	162

To Be Replaced	ECG Replacement
C43	162
C44	162
C45	123A
C46	128
C46C(IC)	1077
C47	123A
C47C(IC)	1076
C48	123
C48C	123A
C48C-1(IC)	1091*
C48C1(IC)	1091*
C48C(IC)	1091*
C49	128
C49C(IC)	1086A*
C49Y	130
C50A	101
C50BA042	121
C50C(IC)	1084
C50(Transistor)	101
C51	128
C52(Transistor)	123A
C53	123A
C54	123A
C55	123A
C56	107
C58	154
C58A	154
C59	128
C60(diode)	109
C60(transistor)	101
C61	128
C62(Transistor)	123A
C63	123A
C63(Japan)	108
C64	123A
C64(Japan)	154
C65	154
C65B	154
C65N	154
C65Y	154
C65YA	154
C65YB	154
C65YTV	154
C66	154
C66-P11111-0001	123A
C66-P11150-00001	123A
C67	123A
C68	123A
C69	128
C70	154
C71	101
C72	101
C73	100
C73(Japan)	101
C74	108
C75	100
C75(Japan)	101
C76	100
C76(Japan)	101
C77	101
C77C	101
C78	101
C79	108
C80	108
C81C(IC)	1075A
C82S	108
C83-829	116
C83-880	116
C87	123A
C88	154
C88A	154
C89	101
C90	101
C91	101
C92-0025-R0	724
C92-0025-RO	784
C94	457
C94A	457
C94E	457
C95	457
C95A	457
C97	128
C97A	128
C98	108
C99	108
C99CD	128
C100	123A
C100-OY	123A
C101	124
C101A	124
C101B	299
C101(Japan)	124
C101X	124
C102	129
C102(Japan)	105
C103	123A
C103A(SCR)	5402
C103A(transistor)	123A
C103B	5404
C103(Japan)	123A
C103Q	5400
C103Y	5400
C103YY	5401
C104	123A
C104A	123A
C105	123A
C106	282
C106A	5454
C106A1	5454
C106A2	5454
C106A3	5454
C106A4	5454
C106B	5455
C106B1	5455
C106B2	5455

To Be Replaced	ECG Replacement
C106B3	5455
C106B4	5455
C106C	5456
C106C1	5456
C106C2	5456
C106C3	5456
C106C4	5456
C106D	5457
C106D1	5457
C106D2	5457
C106D3	5457
C106D4	5457
C106F	5453
C106F1	5453
C106F2	5453
C106F3	5453
C106F4	5453
C106(PNP)	129
C106Q	5452
C106Q1	5452
C106Q2	5452
C106Q3	5452
C106Q4	5452
C106Y	5452
C106Y1	5452
C106Y2	5452
C106Y3	5452
C106Y4	5452
C107A	5454
C107A1	5454
C107A2	5454
C107A3	5454
C107B	5455
C107B1	5455
C107B2	5455
C107B3	5455
C107B4	5455
C107C	5456
C107C1	5456
C107C2	5456
C107C3	5456
C107C4	5456
C107D	5457
C107D1	5457
C107D2	5457
C107D3	5457
C107D4	5457
C107F	5453
C107F1	5453
C107F2	5453
C107F3	5453
C107F4	5453
C107Q	5452
C107Q1	5452
C107Q2	5452
C107Q3	5452
C107Q4	5452
C107Y	5452
C107Y1	5452
C107Y2	5452
C107Y3	5452
C107Y4	5452
C108	128
C109	128
C109A	128
C110	123A
C111	123A
C111B	108
C111E	123A
C112(Japan)	128
C112(PNP)	129
C113	128
C114	128
C115	128
C116	195A
C116T	195A
C117	128
C118	129
C118(Japan)	128
C119	129
C119(Japan)	128
C120	128
C121	128
C122A	5462
C122A1	5462
C122A2	5462
C122A3	5462
C122A4	5462
C122A5	5462
C122A6	5462
C122B	5463
C122B1	5463
C122B2	5463
C122B3	5463
C122B4	5463
C122B5	5463
C122B6	5463
C122C	5465
C122C1	5465
C122C2	5465
C122C3	5465
C122C4	5465
C122C5	5465
C122C6	5465
C122D	5465
C122D1	5465
C122D2	5465
C122D3	5465
C122D4	5465
C122D5	5465
C122D6	5465
C122F	5461
C122F1	5461
C122F2	5461
C122F3	5461

To Be Replaced	ECG Replacement
C122F4	5461
C122F5	5461
C122F6	5461
C122(Transistor)	128
C123(Transistor)	128
C124	128
C127	108
C128	101
C129	101
C130	128
C131	123A
C132	123A
C133	123A
C134	123A
C134B	123A
C135	123A
C135A	5542
C135B	5543
C135C	5544
C135D	5545
C135E	5546
C135F	5541
C135M	5547
C136	123A
C137E	5546
C137M	5547
C137(Transistor)	123A
C138A	123A
C138(Transistor)	123A
C139(Transistor)	123A
C140(Transistor)	128
C143-05	960
C143C08	964
C147	128
C148(Transistor)	108
C150	128
C150T	128
C151	123A
C152(Transistor)	128
C154	154
C154B	154
C154C	154
C154H	154
C155	108
C156	108
C157	123
C157A(IC)	1171
C157(IC)	1171
C158	123
C159	123A
C160	123A
C163	195A
C166	123A
C167	123A
C170	108
C170R	123A
C171	107
C172	108
C172A	108
C173	101
C174	107
C174A	107
C175	101
C175B	102A
C176	101
C177	101
C178	101
C179	103A
C180(Transistor)	103A
C181	103A
C182	313
C182Q	313
C183	313
C183E	313
C183J	313
C183K	313
C183L	313
C183M	313
C183P	313
C183Q	313
C183R	313
C183W	313
C184	313
C184H	313
C184J	313
C184L	313
C185	313
C185A	313
C185J	313
C185M	313
C185Q	313
C185R	313
C185(Transistor)	313
C185V	108
C186	107
C187	107
C187R	103A
C187Y	103A
C188	128
C188A	128
C188AB	128
C189	128
C189D	194
C189E	194
C189F	194
C189K	238
C190	128
C191	123A
C192	123A
C193	123A
C194	123A
C195	123A
C196	123A
C197	123A
C198	162

To Be Replaced	ECG Replacement
C199	108
C200(SCR)	5494
C200(transistor)	123A
C201	129
C201(Japan)	123A
C202	129
C202(Japan)	123A
C203	123A
C204	123A
C205	123A
C206	108
C206(IC)	1075A
C208	128
C210	128
C211	128
C212	194
C213	128
C214	128
C215	128
C216	128
C217	128
C218	123A
C218A	123A
C220	128
C221	128
C222	128
C223(Transistor)	128
C224	128
C225	128
C226	128
C227	128
C228	128
C229	128
C230	123A
C231	128
C232	128
C233	128
C234	128
C235	293
C235-O	293
C235(O)	190
C235Y	152
C236	128
C237	123A
C238	128
C239	123A
C240	162
C241	162
C242	162
C243	162
C244	130
C245	162
C246	162
C247	128
C248	128
C249	128
C250	161
C251	161
C251A	161
C252	161
C253	161
C254	175
C261	192A
C263	108
C266	107
C267	123A
C267A	123A
C268	128
C268A	128
C269	108
C270	162
C271	108
C272	108
C273	154
C277C	103A
C281	123A
C281A	123A
C281B	123A
C281C	123A
C281C-EP	123A
C281D	123A
C281EP	123A
C281H	123A
C281HA	123A
C281HB	123A
C281HC	123A
C282	123A
C282H	123A
C282HA	123A
C282HB	123A
C282HC	123A
C282(Transistor)	108
C283	123A
C283(Transistor)	123A
C284	123A
C284H	123A
C284HA	123A
C284HB	123A
C285	123A
C285A	123A
C286(Transistor)	108
C287A	313
C287(Transistor)	313
C288	313
C288A	313
C288E(STUD)	5547
C289	108
C290	195A
C290(Transistor)	195A
C291(Transistor)	128
C292	128
C293	195A
C296	108
C299	225
C300	123A

To Be Replaced	ECG Replacement
C301	123A
C301A(PNP)	129
C302(Japan)	123A
C302(PNP)	129
C303(IC)	1049
C306	128
C307	128
C308	128
C309	128
C310	128
C311	195A
C312	224
C313	108
C313C	161
C313H	161
C313(Japan)	161
C315	123A
C316	108
C317	123A
C317C	123A
C317-O	123A
C318	123A
C318A	108
C318A(Japan)	123A
C318(Japan)	123A
C319	123A
C320	123A
C321	123A
C321H	123A
C321HA	123A
C321HB	123A
C321HC	123A
C323	123A
C324	123A
C324A	123A
C324C	987
C324H	123A
C324HA	123A
C325	152
C325A	152
C325E	152
C328A	123A
C329	107
C329B	107
C329C	107
C333H	213
C333HA	213
C333HB	213
C333HC	213
C335	199
C337B	121
C338	291
C341V	127
C348	161
C350H	123A
C350(Transistor)	123A
C351	107
C351(FA)	107
C352	128
C352A	123A
C352A(Japan)	128
C352(Japan)	123A
C353	128
C353A	128
C356	123A
C360	123A
C360B	233
C360D	123A
C361	107
C362	107
C363	123A
C366	123A
C367	123A
C368	199
C368BL	199
C368GR	199
C368V	199
C369	123A
C369BL	123A
C369G	123A
C369G-BL	123A
C369G-GR	123A
C369G-V	123A
C369GBL	123A
C369GGR	123A
C369GR	123A
C369V	123A
C370	108
C370F	108
C370G	108
C370H	108
C370J	108
C370K	108
C371	123A
C371(0)	123A
C371-0	123A
C371(0)	123A
C371B	123A
C371G	123A
C371-O	123A
C371O	123A
C371-O	123A
C371-R	123A
C371R	123A
C371-R-1	199
C372	123A
C372-0	123A
C372-1	123A
C372-2	123A
C372GR	123A
C372H	123A
C372-O	123A
C372(O)	123A
C372-R	123A
C372-Y	123A

To Be Replaced	ECG Replacement
C372Y	123A
C372-Y	123A
C372-Z	123A
C373	199
C373-0	199
C373BL	199
C373G	199
C373GR	199
C373-O	199
C373S	199
C373W	199
C374	199
C374-BL	199
C374JA	199
C374-V	199
C375	311
C375-0	311
C375-O	311
C375-Y	311
C376	128
C377	123A
C377A	316
C378	123A
C379	123A
C380	229
C380-0	229
C380-1	229
C380A.	229
C380A-0	229
C380A-0(TV)	229
C380A-C	229
C380A-O	229
C380A(O)	229
C380A-R	229
C380A-R(TV)	229
C380AO	229
C380ATV	229
C380AY	229
C380D	229
C380-O	229
C380-O/4454C	229
C380R	229
C380R/4454C	229
C380(Transistor)	229
C380TV	229
C380Y	229
C380-Y	229
C381	107
C381-0	107
C381BN	107
C381-O	107
C381-R	107
C381R	107
C382	319
C382BK	319
C382-BK(1)	319
C382-BK(2)	319
C382BL	319
C382BN	319
C382BR	319
C382G	319
C382-GR	319
C382GR	319
C382-GY	319
C382R	319
C382V	319
C383	199
C383F	199
C383G	199
C383T	199
C383W	199
C383Y	199
C384	108
C384-O	108
C384Y	108
C385A	107
C385(Transistor)	107
C386	108
C386A-0(TV)	108
C387	316
C387A	316
C387A(FA-3)Tran	316
C387A(FA-3)	108
C387A(Transistor)	316
C387G	108
C387G(Transistor)	316
C387(Transistor)	316
C388A	233
C388ATV	233
C388(Transistor)	233
C389	161
C389-0	161
C389R	161
C390(Transistor)	161
C392	108
C394	229
C394-0	229
C394GR	229
C394-O	229
C394R	229
C394(Transistor)	229
C394W	229
C394Y	229
C395	123A
C395A	123A
C395R	123A
C396	123A
C397(Transistor)	108
C398	161
C398(FA-1)	161
C398(Transistor)	161
C399	161
C400	123A
C400-0	123A
C400-GR	199

@, * — See special notes on inside back cover.

To Be Replaced	ECG Replacement
C400-R	123A
C400-Y	123A
C401	106
C401A	291
C401AK	291
C401AL	291
C401(Japan)	123A
C402	129
C402A	123A
C402(Japan)	123A
C403	289
C403A	289
C403B(Sony)	289
C403C	289
C403C(3rd IF)	233
C403C(Sony)	289
C403(C)	123A
C403C(SONY)	128
C404	123A
C405	108
C406	108
C407	154
C407(Japan)	162
C408	163A
C409	163A
C410	163A
C411	163A
C412	163A
C420	128
C423	123A
C423B	123A
C423C	123A
C423D	123A
C423E	123A
C423F	123A
C424	123A
C424D	123A
C424(Japan)	123A
C425	123A
C425B	123A
C425C	123A
C425D	123A
C425E	123A
C425F	123A
C426	128
C429	108
C429J	108
C429X	108
C430	108
C430H	108
C430W	108
C434B	108
C440	123
C441	123
C442	123
C443	128
C444	123A
C450	123A
C451C	987
C454	289
C454A	289
C454(A)	289
C454B	289
C454C	289
C454D	289
C454L	289
C454LA	289
C455	289
C456	195A
C456A	195A
C456D	195A
C456-O	195A
C458	289
C458A	289
C458AD	289
C458B	289
C458B-D	289
C458BC	289
C458BK	289
C458BL	289
C458BLG	289
C458C	289
C458(C)	289
C458CLG	289
C458CM	289
C458D	289
C458G	289
C458GLB	289
C458K	289
C458KA	289
C458KB	289
C458KC	289
C458KD	289
C458L	289
C458LB	289
C458LG	289
C458LG(B)	123A
C458LGA	289
C458LGB	289
C458LGBM	289
C458LGC	289
C458LGD	289
C458LGO	289
C458LGS	289
C458M	289
C458P	289
C458RGS	289
C458TOK	289
C458VC	289
C459	128
C459B	128
C459C	123A
C459D	289
C460	233
C460A	233

To Be Replaced	ECG Replacement
C460(A)	233
C460B	233
C460(B)	233
C460C	233
C460D	233
C460F	107
C460G	233
C460GB	233
C460H	233
C460K	233
C460L	233
C461	229
C461A	229
C461B	229
C461C	229
C461E	229
C461L	229
C461R	108
C463	319
C463H	319
C463(Y)	131
C464	161
C464C	161
C465	161
C466	161
C466H	161
C467B	287
C468	123A
C468A	123A
C468B	287
C468C	287
C468(LGR)	289
C469	313
C469A	313
C469F	313
C469K	313
C469Q	313
C469R	313
C470	154
C472Y	154
C475	123A
C475K	123A
C476	123A
C477	108
C478	195A
C478-4	195A
C478D	195A
C478(D)	195A
C478YL	291
C479	128
C481	195A
C481X	195A
C482	195A
C482-GR	195A
C482GR	195A
C482-O	195A
C482X	195A
C482-Y	195A
C482Y	195A
C484	324
C484BL	282
C484R	282
C484Y	282
C485	282
C485BL	282
C485C	282
C485Y	282
C486	282
C486BL	282
C486Y	282
C487	175
C488	175
C489	175
C490	175
C491	175
C491BL	175
C491R	175
C491Y	175
C492	162
C493	223
C493-BL	223
C493-R	223
C493-Y	223
C494	223
C494-BL	223
C494BL	223
C494-R	223
C494-Y	223
C495	295
C495-0	295
C495AQ	199
C495(CB)	295
C495-O	184
C495-R	295
C495(RF PWR)	295
C495T	295
C495T(CB)	295
C495-Y	184
C495Y	295
C496	295
C496-0	295
C496-O	295
C496(O)	295
C496-R	295
C496-Y	295
C496Y	184
C497	128
C497-O	128
C497-R	128
C497-Y	128
C498	128
C498-O	128
C498-R	128
C498-Y	128

To Be Replaced	ECG Replacement
C499	194
C499R	194
C499-R(FA-1)	194
C499-RY	194
C499Y	194
C499-Y(FA-1)	194
C500	154
C500R	154
C500Y	154
C501(Transistor)	128
C502	195A
C502(Japan)	195A
C503	128
C503GR	128
C503-O	128
C503-Y	128
C504	128
C504GR	128
C504-O	128
C504-Y	128
C505	154
C-505	177
C505-O	154
C505-R	154
C506	154
C506-O	154
C506-R	154
C507	154
C507-O	154
C507-R	154
C507-Y	154
C508	286
C509	289
C509(0)	289
C509G	289
C509Q	289
C509(Transistor)	289
C509Y	289
C512	128
C512-O	128
C512-R	128
C513	128
C513-O	128
C513R	128
C514	124
C515	124
C515A	124
C515A(BK)	124
C515AX	124
C515Y	124
C516	128
C517	237
C517C	237
C519	162
C519A	162
C520A	130
C520(Transistor)	130
C521	130
C521A	130
C522	225
C522-O	225
C522-R	225
C523	225
C523-O	225
C523-R	225
C524	225
C524-O	225
C524-R	225
C525	225
C525-O	225
C525-R	225
C526	154
C529	123A
C529A	123A
C535	229
C535A	229
C535B	229
C535(B)	229
C535C	229
C535G	229
C536	199
C536A	199
C536AG	199
C536B	199
C536C	199
C536D	199
C536DK	199
C536E	199
C536ED	199
C536EH	199
C536EJ	199
C536EN	199
C536ER	199
C536ET	199
C536EZ	199
C536F	199
C536F1	199
C536F2	199
C536F-FP	199
C536FC	199
C536FP	199
C536FS	199
C536FS6	199
C536FZ	199
C536G	199
C536GF	199
C536GK	199
C536GT	199
C536GV	199
C536GY	199
C536H	199
C536K	199
C536NP	199
C536W	199
C536YE	199

To Be Replaced	ECG Replacement
C536YF	199
C536YG	199
C537	123A
C537-01	123A
C537A	123A
C537B	123A
C537C	123A
C537D	123A
C537D2	123A
C537E	123A
C537EF	123A
C537EH	123A
C537EJ	123A
C537EK	123A
C537F	123A
C537(F)	123A
C537F1	123A
C537F2	123A
C537FC	123A
C537FV	123A
C537G	123A
C537(G)	123A
C537GF	123A
C537GI	123A
C537H	123A
C537HT	123A
C537W	123A
C538	123A
C538A	123A
C538AQ	123A
C538P	123A
C538Q	123A
C538R	123A
C538S	123A
C538T	123A
C539	123A
C539K	123A
C539L	123A
C539R	123A
C539S	123A
C540	123A
C544	108
C544C	108
C544D	108
C544E	108
C545	107
C545A	107
C545B	107
C545C	107
C545D	107
C545E	107
C554C(IC)	1142
C-554C(IC)	1142
C554(IC)	1142
C-554(IC)	1142
C555A	703A
C-555A(IC)	703A
C555A(IC)	703A
C555AB(IC)	703A
C555C(IC)	703A
C-555C(IC)	703A
C555H(IC)	1092
C555(IC)	703A
C558	389
C558C	1051
C558C(IC)	1051
C558(IC)	1051
C560	128
C561	108
C561C(IC)	1079
C561(IC)	1079
C562	161
C562C1(IC)	1050
C562C(IC)	1050
C562(IC)	1050
C562O	129
C562Y	161
C563	161
C563A	161
C563A(3rdIF)	233
C563H1D369(IC)	1081A*
C563H2(IC)	1081A*
C563H(IC)	1081A*
C563(IC)	1081A*
C564	159
C564A	159
C564C(IC)	1088
C564(IC)	1088
C564P	159
C564Q	159
C564R	159
C564S	159
C564T	159
C566	123A
C566H2(IC)	1052
C566H(IC)	1052
C566H-L	1052
C566H-M	1052
C566H-N	1052
C566(IC)	1052
C567	161
C568	108
C570C(IC)	1086A*
C570(IC)	1086A*
C571	195A
C571C(IC)	1078
C571(IC)	1078
C573C(IC)	1184
C573(IC)	1184
C574J(IC)	147A
C575C2(IC)	1140
C575C(IC)	1140
C575(IC)	1140
C576H	1185
C576H(IC)	1185

To Be Replaced	ECG Replacement
C576(IC)	1185
C577A	1082
C577H	1082
C577H(IC)	1082
C577(IC)	1082
C577N	1082
C580	195A
C580C(IC)	1196
C580(IC)	1196
C582	124
C582A	124
C582B	124
C582BC	124
C582BX	124
C582BY	124
C582C	124
C583	278
C583C	278
C586	162
C587	123AP
C587A	123AP
C587B	123AP
C587C	123AP
C588	123A
C589	154
C590	289
C590Y	289
C592A2	1195
C592H2	1195
C592H2(IC)	1195
C592H(IC)	1195
C592(IC)	1195
C593	123A
C594	128
C595	123A
C595C2	1187
C595C(IC)	1186
C595(IC)	1186
C596C(IC)	1187
C596(IC)	1187
C596(TRANSISTOR)	123A
C597	4016B
C601	311
C602E	123A
C605	313
C605K	313
C605L	313
C605M	313
C605(NEC)	313
C605Q	313
C605(Q)	313
C605TW	313
C606	313
C606(NEC)	313
C608	237
C608E	237
C608T	237
C609	237
C609F	237
C609F(Transistor)	237
C609T	237
C609T(Transistor)	237
C609(Transistor)	237
C611	108
C611(Transistor)	108
C612	108
C613	108
C614	195A
C614D	195A
C614E	195A
C614F	195A
C614G	195A
C615	195A
C615A	195A
C615B	195A
C615C	195A
C615D	195A
C615E	195A
C615F	195A
C615G	195A
C619	123A
C619B	123A
C619C	123A
C619D	123A
C620	123A
C620B	123A
C620C	123A
C620CD	123A
C620D	123A
C620DE	123A
C620E	123A
C621	123A
C622	123A
C627	154
C628	128
C629	107
C631	123A
C631A	123A
C632	123A
C632A	123A
C633	123A
C633-7	123A
C633A	123A
C633G	123A
C633H	123A
C634	123A
C634A	123A
C635A	124
C636	187
C640	123A
C640B	123A
C641	108
C641B	108
C642	389
C642A	389

To Be Replaced	ECG Replacement
C643	389
C643A	389
C644	199
C644C	199
C644F	199
C644F/494	199
C644FR	199
C644FS	199
C644H	199
C644HR	199
C644HS	293
C644P	199
C644PJ	199
C644Q	199
C644QRS	199
C644R	199
C644RF	199
C644RST	199
C644S	199
C644S/494	199
C644T	199
C645	107
C645A	107
C645B	107
C645C	107
C645G	107
C645N	107
C646	223
C647	280
C647P	280
C647Q	280
C647R	280
C648	199
C648H	199
C649	108
C650	199
C650B	123A
C651	278
C652	311
C653	316
C654	311
C655	123A
C656	107
C657	107
C658	108
C658A	108
C659	108
C662	108
C663	161
C664	130
C664B	130
C664C	130
C665	280
C665H	280
C665HA	280
C665HB	280
C668	229
C668-0	229
C668A	229
C668B	229
C668B1	229
C668BC2	229
C668C	229
C668C1	229
C668CD	229
C668CE	199
C668D	229
C668D0	229
C668D1	229
C668DE	229
C668DO	229
C668DV	229
C668DX	229
C668DZ	229
C668E	229
C668E1	229
C668E2	229
C668EP	229
C668EV	229
C668EX	229
C668F	229
C670	124
C673	234
C673C2	159
C673D	159
C674	133
C674B	161
C674C	161
C674CV	161
C674D	161
C674E	161
C674F	161
C674G	161
C674(Japan)	167
C675	283
C677	159
C680	175
C680A	175
C680R	175
C681	163A
C681A	163A
C681B	163A
C681YL	163A
C682	161
C682A	161
C682B	161
C683	161
C683A	161
C683B	161
C683P	108
C683Q	108
C683R	108
C683V	161
C684	229
C684A	108

To Be Replaced	ECG Replacement
C684A(JAPAN)	108
C684B	108
C684BK	108
C684F	108
C684(JAPAN)	108
C684R	229
C685	124
C685(0)	124
C685A	124
C685B	124
C685GU	124
C685P	124
C685S	124
C685Y	124
C686	154
C686-248-0	159
C687	162
C688	108
C688E	199
C688EL	199
C689	123A
C689H	123A
C693	199
C693A	199
C693B	199
C693C	199
C693D	199
C693E	199
C693E(Japan)	199
C693EB	199
C693ET	199
C693F	199
C693FC	199
C693FL	199
C693FU	199
C693G	199
C693G(Japan)	199
C693GL	199
C693GS	199
C693GU	199
C693GZ	199
C693H	199
C693(Japan)	199
C694	199
C694D	123A
C694E	199
C694F	199
C694G	199
C694Z	199
C695	107
C696	195A
C696A	195A
C696B	195A
C696D	195A
C696E	195A
C696F	195A
C696G	195A
C696H	195A
C696I	195A
C697	237
C697A	237
C697D	237
C697F	237
C701	311
C701(Transistor)	123
C702	123
C705	107
C705B	107
C705C	107
C705D	107
C705E	107
C705F	107
C705TV	107
C707	107
C707H	107
C708	128
C708A	128
C708AA	128
C708AB	128
C708AC	128
C708AH	128
C708AHA	128
C708AHB	128
C708AHC	128
C708B	128
C708C	128
C709	123A
C709B	123A
C709C	123A
C709CD	123A
C709D	123A
C710	123AP
C710-0	123AP
C710-1	123AP
C710-2	123AP
C710-4	123AP
C710B	123AP
C710B2	123AP
C710(B)	123AP
C710BC	123AP
C710C	123AP
C710(C)	123AP
C710CD	123AP
C710D	123AP
C710(D)	123AP
C710DE	123AP
C710E	123AP
C710F	123AP
C710P	123AP
C711	199
C711A	199
C711AE	199
C711AF	199
C711AG	199
C711D	199

@, * — See special notes on inside back cover.

To Be Replaced	ECG Replacement
C711E	199
C711(E)	199
C711F	199
C711FG	199
C711G	199
C712	123A
C712A	123A
C712BC	123A
C712C	123A
C712D	123A
C712DE	123A
C712E	123A
C712-0	123A
C712W	123A
C713	123A
C714	123A
C715	123A
C715A	123A
C715B	123A
C715C	123A
C715D	123A
C715E	123A
C715EJ	123A
C715EV	123A
C715F	123A
C715(Japan)	123A
C715XL	123A
C716	123A
C716B	123A
C716C	123A
C716D	123A
C716E	123A
C716F	123A
C716G	123A
C717	161
C717B	161
C717BK	161
C717BLK	161
C717C	161
C717E	161
C717(Final IF)	233
C722	229
C723	108
C725	123A
C725-0	123A
C727	154
C728	154
C730	278
C732	199
C732-0	199
C732B	199
C732BL	199
C732GR	199
C732S	199
C732V	199
C732Y	199
C733	199
C733-0	199
C733BL	199
C733GR	199
C733-0	199
C733R	199
C733V	199
C733Y	199
C733-Y	199
C734	128
C734-0	128
C734GR	128
C734-O	128
C734O	128
C734-R	128
C734-Y	128
C734Y	128
C735	289
C735-0	289
C735B	289
C735F	289
C735FA3	289
C735(FA-3)	108
C735G	289
C735GR	289
C735H	289
C735J	289
C735K	289
C735L	289
C735-O	289
C735(O)	289
C735-R	123A
C735Y	289
C735-Y	289
C736	130
C738	107
C738B	107
C738C	107
C738D	107
C739	107
C739C	107
C740	108
C741	278
C743A	154
C745Q	199
C746A	154
C748	108
C752	123A
C752G	123A
C756	282
C756-1	282
C756-1-1	282
C756-1-2	282
C756-1-3	282
C756-1-4	282
C756-2	282
C756-2-1	282
C756-2-2	282
C756-2-3	282

To Be Replaced	ECG Replacement
C756-2-4	282
C756-2-5	282
C756-3	282
C756-3-1	282
C756-3-2	282
C756-3-3	282
C756-3-4	282
C756-4	282
C756-4-1	282
C756-4-2	282
C756-4-3	282
C756-4-4	282
C756-5	282
C756A	282
C756A-1	282
C756A-2	282
C756A-3	282
C756A-4	282
C756C	282
C756D	282
C756E	282
C756H	282
C756S	282
C756S-2	282
C756S-2-1	282
C756S-2-2	282
C756S-2-3	282
C756S-2-4	282
C756S-3	282
C756S-3-1	282
C756S-3-2	282
C756S-3-3	282
C756S-3-4	282
C756S-4	282
C756S-4-1	282
C756S-4-2	282
C761	161
C761Y	161
C761Z	161
C762	161
C762P	108
C763	229
C763-0	229
C763B	229
C763C	229
C763(C)	107
C763CD	229
C763D	229
C763-O	229
C764	133
C765	130
C768	130
C772	229
C772B	229
C772BG	229
C772BH	229
C772BV	229
C772BX	229
C772BY	229
C772C	229
C772C1	229
C772C2	229
C772CK	229
C772CL	229
C772CS	229
C772CU	229
C772CV	229
C772CX	229
C772D	229
C772DJ	229
C772DU	229
C772DV	229
C772DX	229
C772DY	229
C772E	229
C772F	229
C772K	229
C772KB	229
C772KC	229
C772KD	229
C772KD1	229
C772KD2	229
C772R	229
C772R(Japan)	229
C772RB-D	229
C772RD	229
C773	123A
C773C	123A
C773D	123A
C773E	123A
C774	195A
C775	195A
C776	195A
C776Y	195A
C776(Y)	237
C777	237
C778	237
C778B	237
C779	286
C779-0	286
C779-R	286
C779-y	286
C780	287
C780AG	287
C780AG-0	287
C780AG-R	287
C780AG-Y	287
C780G	287
C781	195A
C782	286
C783	286
C783Y	286
C784	229
C784-0	229
C784A	229

To Be Replaced	ECG Replacement
C784BN	229
C784-O	229
C784O	229
C784-O	229
C784R	229
C784Y	229
C785	229
C785(0)	229
C785BN	229
C785D	229
C785E	229
C785R	229
C786	229
C786-0	161
C786-O	161
C786R	161
C787	161
C788	154
C789	152
C789-0	152
C789-O	152
C789-R	152
C789-Y	152
C789Y	152
C790-0	291
C790Y	152
C791	175
C792/FA-3	162
C793	130
C793BL	130
C793R	130
C793Y	130
C794R	130
C795	124
C795A	124
C796	123A
C797	128
C798	128
C799	237
C799K	237
C800	313
C803	128
C805	154
C806	283
C806A	283
C807	163A
C807A	163A
C814	192A
C814-O	292
C814-Y	292
C815	123A
C815A	123A
C815B	123A
C815C	123A
C815F	123A
C815K	123A
C815L	123A
C815M	123A
C815(M)	123A
C815-O	292
C815P	123A
C815S	123A
C815SA	123A
C815SC	123A
C815Y	292
C816	128
C816K	128
C818	154
C821	346
C822	346
C826	128
C827	128
C828	199
C828A	199
C828AF	199
C828AP	199
C828AQ	199
C828AR	199
C828AS	123A
C828AT	199
C828B	199
C828E	199
C828F	199
C828FR	199
C828H	199
C828K	199
C828LR	199
C828LS	199
C828N	199
C828-O	199
C828O	199
C828-OP	199
C828P	199
C828-P	199
C828PQ	199
C828Q	199
C828-Q	199
C828QRS	199
C828R	199
C828-R	199
C828R/494	199
C828RS	199
C828RT	199
C828S	199
C828ST	199
C828T	199
C828W	199
C828Y	199
C829	123A
C829A	123A
C829B	123A
C829BC	123A
C829C	123A
C829D	123A
C829F	123A

To Be Replaced	ECG Replacement
C829P	123A
C829Q	123A
C829R	123A
C829S	123A
C829X	123A
C829Y	123A
C830	175
C830-0	175
C830A	175
C830B	175
C830BKB	175
C830C	175
C831	123A
C833BL	199
C835	107
C836M	123A
C837	107
C837F	107
C837H	107
C837K	107
C837L	107
C837WF	107
C838	123A
C838A	123A
C838B	123A
C838C	123A
C838D	123A
C838E	123A
C838F	123A
C838H	123A
C838(H)	199
C838J	123A
C838(J)	199
C838K	123A
C838(K(	199
C838L	123A
C838(L)	199
C838M	123A
C838(M)	199
C838R	123A
C838W	123A
C839	123A
C839A	123A
C839B	123A
C839C	123A
C839D	123A
C839E	123A
C839F	123A
c839H	123A
C839H	123A
C839(H)	123A
C839J	123A
C839(J)	123A
C839L	123A
C839(L)	123A
C839M	123A
C839(M)	123A
C839N	123A
C839Q	123A
C839R	123A
C839S	123A
C839Y	123A
C840	175
C840A	175
C840AC	175
C840H	175
C840HP	175
C840PQ	175
C844	123A
C845	195A
C847	123A
C848	123A
C849	123A
C850	123A
C851	130
C853	192A
C853A	192A
C853B	192A
C853C	192A
C853K	192A
C853KLM	192A
C853L	192A
C856	154
C856-02	154
C856C	154
C857	154
C857H	154
C858	199
C858C	1198
C858E	199
C858F	199
C858FG	199
C858G	199
C859	199
C859E	199
C859F	199
C859FG	199
C859G	199
C859GK	199
C860	161
C860C	161
C860D	161
C860E	161
C863	161
C863D	108
C864	161
C866	237
C867	277
C867A	277
C868	154
C869	154
C870	123A
C870BL	123A
C870C	123A
C870E	123A

To Be Replaced	ECG Replacement
C870F	123A
C871	123A
C871BL	123A
C871D	123A
C871E	123A
C871F	123A
C871G	123A
C875	128
C875-1	128
C875-1C	128
C875-1D	128
C875-1E	128
C875-1F	128
C875-2	128
C875-2C	128
C875-2D	128
C875-2E	128
C875-2F	128
C875-3	128
C875-3C	128
C875-3D	128
C875-3E	128
C875-3F	128
C875BR	128
C875C	128
C875D	128
C875E	128
C875F	128
C876	128
C876C	128
C876D	128
C876E	128
C876F	128
C876TV	128
C876TVD	128
C876TVE	128
C876TVEF	128
C881	192A
C881A	192A
C881B	192A
C881C	192A
C881D	192A
C881K	192A
C881L	192A
C889	162
C894	123A
C895	175
C896	123A
C897	280
C897A	280
C897B	280
C897C	280
C898	280
C898A	280
C898B	280
C898C	280
C899	123A
C899K	123A
C900	199
C900A	199
C900AF	199
C900B	199
C900C	199
C900D	199
C900E	199
C900EF	199
C900EU	199
C900F	199
C900(F)	199
C900L	199
C900(L)	199
C900M	199
C900U	199
C900U/E	199
C900UE	199
C900V	199
C900VE	199
C901	163A
C901A	163A
C903	287
C903D	229
C907	199
C907A	199
C907AC	199
C907AD	199
C907AH	199
C907C	199
C907D	199
C907H	199
C907HA	199
C908	278
C912	108
C913	123A
C915	199
C915A	199
C915AQ	199
C915Q	199
C915R	199
C917	229
C917K	229
C918	161
C920	229
C920E	107
C920Q	229
C920R	229
C921	107
C921C1	107
C921K	107
C921L	107
C921M	107
C922	107
C922A	107
C922B	107
C922C	107
C922K	107

To Be Replaced	ECG Replacement
C922L	107
C922M	107
C923	199
C923A	199
C923B	199
C923C	199
C923D	199
C923E	123A
C923F	199
C923Q	199
C923U	199
C924	108
C924E	108
C924F	108
C924M	108
C925	123A
C926	154
C926A	154
C926AE	154
C927	319
C927A	319
C927B	319
C927C	319
C927CJ	161
C927CU	319
C927CW	319
C927D	319
C927DD	161
C927E	319
C928	161
C928B	161
C928C	161
C928D	161
C928E	161
C929	229
C929-0	229
C929B	229
C929C	229
C929C1	229
C929D	229
C929D1	229
C929DE	229
C929DP	229
C929DU	229
C929DV	229
C929E	229
C929ED	229
C929F	229
C929FK	229
C929H	229
C930	229
C930B	229
C930BK	229
C930BV	229
C930C	229
C930CD	229
C930CK	199
C930CL	229
C930CS	229
C930D	229
C930D1	229
C930D2	229
C930DE	107
C930DH	229
C930DS	229
C930DT	229
C930DT-2	229
C930DX	229
C930DZ	199
C930E	229
C930EP	229
C930ET	107
C930EV	229
C930EX	229
C930F	229
C930J	229
C930L	229
C931	186A
C931C	186A
C931D	186A
C931E	186A
C932	152
C932E	152
C933	123A
C933BB	123A
C933C	123A
C933D	123A
C933E	123A
C933F	123A
C933FP	123A
C933FPC	123A
C933FPD	123A
C933FPE	123A
C933FPF	123A
C933FPG	123A
C933G	123A
C934	128
C934C	123A
C934D	123A
C934E	123A
C934F	123A
C934G	123A
C934P	123A
C934(rectifier)	117
C934(Transistor)	123A
C935	162
C936	164
C937	165
C937-01	165
C937A	165
C937B	165
C937(BK)	165
C937YL	165
C937(YL)	165
C938	123A

To Be Replaced	ECG Replacement
C938A	123A
C938B	123A
C938C	123A
C939	163A
C939D	289
C939L	163A
C940	283
C940L	283
C940M	283
C940P	283
C940Q	283
C940R	283
C941	123A
C941-0	123A
C941-0Y	199
C941-O	123A
C941-R	123A
C941R	123A
C941TM	123A
C941-Y	123A
C941Y	123A
C941-Y	123A
C941YO	123A
C942H2	1195
C943	123A
C943A	123A
C943B	123A
C943C	123A
C944	123A
C944A	123A
C944B	123A
C944C	123A
C944D	123A
C944K	123A
C945	199
C945A	199
C945A/D	199
C945A/P	199
C945AK	199
C945AO	199
C945AP	199
C945AQ	199
C945AR	199
C945B	199
C945C	199
C945D	199
C945E	199
C945F	199
C945G	199
C945H	199
C945K	199
C945L	199
C945LK	199
C945LPQ	199
C945M	199
C945-O	199
C945O	199
C945P	199
C945P1	199
C945P2	199
C945P/Q	199
C945PO	199
C945PQ	199
C945Q	199
C945-Q	199
C945QL	199
C945QP	199
C945QR	199
C945R	199
C945-R	199
C945(R)	199
C945RQ	199
C945S	199
C945T	199
C945TQ	199
C945TR	199
C945U	199
C945X	199
C945Y	199
C945Z	199
C947	161
C948	161
C953K	199
C957	161
C959	128
C959A	128
C959B	128
C959C	128
C959D	128
C959M	128
C959S	128
C959SA	128
C959SB	128
C959SC	128
C959SD	128
C960	128/400
C960A	128/400
C960B	128/400
C960C	128/400
C960D	128/400
C960(Japan)	128/400
C960K	128/400
C960L	128/400
C960M	128/400
C960N	128/400
C960S	128/400
C960SA	128/400
C960SB	128/400
C960SC	128/400
C960SD	128/400
C966	123A
C967	123A
C968	123A
C968P	123A
C971	192

To Be Replaced	ECG Replacement
C972	128
C972C	128
C972D	128
C972E	128
C973	283
C982	172A
C983	287
C983A	287
C983C	287
C983FA-1	287
C983O	287
C983-O	287
C983S	287
C983-Y	287
C984	123A
C984A	123A
C984B	123A
C984C	123A
C991	123A
C992	123A
C993	128
C995	154
C996	225
C997	161
C998	278
C999	165
C999A	165
C1000	199
C1000-BL	199
C1000BL	199
C1000-GR	199
C1000GR	199
C1000Y	199
C1000-Y	123A
C1000Y	123A
C1001	278
C1001H2(IC)	1127
C1001H(IC)	1127
C1001(IC)	1127
C1004A(TRANSISTOR)	164
C1004T(Transistor)	164
C1004(TRANSISTOR)	164
C1005A(TRANSISTOR)	165
C1005(TRANSISTOR)	165
C1006	199
C1006A	199
C1006B	199
C1006C	199
C1007	123A
C1008	128
C1008C(IC)	1172
C1008(IC)	1172
C1010	199
C1010A	199
C1010B	199
C1010C	199
C1012	154
C1012A	154
C1013	300
C1013C	300
C1013D	300
C1014	300
C1014B	300
C1014C	300
C1014C1	300
C1014CD	300
C1014D	300
C1014D1	300
C1017	299
C1017-05	299
C1018	299
C1018-05	299
C1018B	210
C1020H	1160
C1020H(IC)	1160
C1020(IC)	1160
C1023	108
C1023G	107
C1023(Japan)	107
C1023-O	107
C1023-Y	107
C1023Y	123A
C1024	175
C1024B	175
C1024C	175
C1024D	175
C1024-D2	175
C1024E	175
C1024F	175
C1025	175
C1025CTV	175
C1025H	1160
C1025H(IC)	1160
C1025(IC)	1160
C1025J	175
C1026	107
C1026G	107
C1026Y	107
C1027	163A
C1030	280
C1030A	280
C1030B	280
C1030C	280
C1030D	280
C1030P	280
C1031H	1245
C1032	107
C1032G	107
C1032H	1170
C1032P	9932
C1032Y	107
C1033	123A
C1033A	123A

To Be Replaced	ECG Replacement
C1033P	9933
C1034	277
C1035	161
C1035C	161
C1035D	161
C1035E	161
C1035P	9935
C1036	161
C1036P	9936
C1044	161
C1044P	9944
C1045	164
C1045B	164
C1045C	164
C1045D	164
C1045E	164
C1045P	9945
C1045R	164
C1046	165
C1046P	9946
C1047	229
C1047B	229
C1047BC	229
C1047BD	229
C1047C	229
C1047CD	229
C1047D	229
C1047E	229
C1048	154
C1048B	154
C1048C	154
C1048D	154
C1048E	154
C1048F	154
C1050	162
C1050C	162
C1050D	162
C1050E	162
C1050F	162
C1051	280
C1051C	280
C1051D	280
C1051E	280
C1051F	280
C1051LC	280
C1051LD	280
C1051LE	280
C1051LF	280
C1052P	9099
C1053P	9093
C1056	154
C1057K	198
C1057L	198
C1057M	198
C1057P	9157
C1058P	9158
C1059	124
C1060	152
C1060A	152
C1060B	152
C1060BM	152
C1060C	152
C1060D	152
C1061	152
C1061A	152
C1061B	152
C1061C	152
C1061D	152
C1061T	152
C1061T-B	152
C1061TB	152
C1062P	9962
C1070	161
C1071	123A
C1072	128
C1072A	128
C1079	280
C1079R	280
C1079Y	280
C1080	280
C1080R	280
C1080Y	280
C1086	165
C1086M	165
C1089B	154
C1089BD	171
C1089C	154
C1093/3ZL	165
C1095	186A
C1095(6)	186A
C1095L	186A
C1095M	186A
C1096	186A
C1096-3SL	186A
C1096-3ZL	186A
C1096/3ZL	186A
C1096(3ZL)	186A
C1096-3ZM	186A
C1096A	186A
C1096B	186A
C1096C	186A
C1096D	186A
C1096E	186A
C1096K	186A
C1096L	186A
C1096LM	186A
C1096M	186A
C1096(M)	186A
C1096N	186A
C1096S	186A
C1096W	186A
C1096ZL	186A
C1098	186A
C1098(4)K	186
C1098(4)L	186

To Be Replaced	ECG Replacement
C1098A	186A
C1098B	186A
C1098C	186A
C1098D	186A
C1098K	186A
C1098L	186A
C1098M	186A
C1100	165
C1101	164
C1101A	164
C1101B	164
C1101C	164
C1101D	164
C1101E	164
C1101F	164
C1101L	164
C1102	124
C1102A	124
C1102B	124
C1102C	124
C1102K	124
C1102L	124
C1102M	124
C1102(M)	124
C1103	154
C1103A	154
C1103(A)	154
C1103B	154
C1103C	154
C1103L	154
C1104	124
C1104A	124
C1104B	124
C1104C	124
C1104K	286
C1104L	286
C1105	124
C1105A	124
C1105B	124
C1105C	124
C1105K	124
C1105L	124
C1105M	124
C1106	162
C1106A	162
C1106B	162
C1106C	162
C1106K	162
C1106L	162
C1106M	162
C1106P	162
C1106Q	162
C1107	291
C1107Q	196
C1108	291
C1109	291
C1110	291
C1111	280
C1112	284
C1114	283
C1115	280
C1116	284
C1116-0	284
C1117	161
C1123	107
C1124	198
C1124E	171
C1124JA	171
C1124JD	171
C1126	107
C1127	190
C1127E	171
C1127H	171
C1127HE	171
C1127JR	171
C1128	161
C1128(3rd IF)	233
C1128D	123A
C1128H	161
C1128(S)	161
C1129	161
C1129(R)	161
C1141	283
C1142	283
C1143	283
C1151	164
C1151A	164
C1152	162
C1152F	162
C1152G	162
C1153	165
C1154	163A
C1155(TRANSISTOR)	190
C1156H	1194
C1156H2(IC)	1194
C1156H(IC)	1194
C1156(IC)	1194
C1156(TRANSISTOR)	190
C1157	190
C1158	108
C1159	107
C1160	175
C1160K	175
C1160L	175
C1161	175
C1162	184
C1162-0	184
C1162A	184
C1162B	184
C1162C	184
C1162C(RF PWR)	299
C1162CP	184
C1162D	184
C1162MP	184
C1162-O	184

To Be Replaced	ECG Replacement
C1162(RF PWR)	299
C1162WB	184
C1162WBP	184
C1162WT	184
C1162WTB	184
C1162WTC	184
C1162WTD	184
C1166	297
C1166-0	297
C1166D	297
C1166GR	297
C1166O	297
C1166-O	297
C1166-O	297
C1166R	297
C1166X	297
C1166Y	297
C1166-Y	297
C1167	238
C1168	124
C1168X	124
C1170	238
C1170A	238
C1170B	389
C1170B/FA-2	238
C1171	165
C1172	238
C1172A	238
C1172B	238
C1173	152
C1173-0	152
C1173A	152
C1173C	152
C1173-GR	152
C1173L	152
C1173M	152
C1173-O	152
C1173-R	152
C1173R	152
C1173(RF PWR)	236
C1173X	152
C1173X0	152
C1173-Y	152
C1173Y	152
C1173Y(Audio)	152
C1174	238
C1175	1194
C1175C	123A
C1175D	123A
C1175E	123A
C1175F	123A
C1180	229
C1182B	161
C1182C	161
C1182D	161
C1184	164
C1184A	164
C1184B	164
C1184C	164
C1184D	164
C1184E	164
C1185	162
C1185A	162
C1185B	162
C1185C	162
C1185K	162
C1185L	162
C1185M	162
C1187	229
C1189K	229
C1189L	229
C1189M	229
C1195	162
C1195FA-1	162
C1196	186A
C1204	199
C1204B	199
C1204C	199
C1204D	199
C1205	108
C1205A	108
C1205B	108
C1205C	108
C1209	297
C1209C	297
C1209E	297
C1210	287
C1210C	287
C1210D	287
C1210E	287
C1211	293
C1211C	293
C1211D	293
C1211E	293
C1212	184
C1212A	184
C1212AA	184
C1212AB	184
C1212ABWT	184
C1212AC	184
C1212ACWT	184
C1212AD	184
C1212AWT	184
C1212AWTA	184
C1212AWTB	184
C1212AWTC	184
C1212AWTD	184
C1212B	184
C1212C	184
C1212D	184
C1212WT	184
C1212WTA	184
C1212WTB	184
C1212WTC	184

To Be Replaced	ECG Replacement
C1212WTD	184
C1213	289
C1213A	289
C1213AA	289
C1213AB	289
C1213AC	289
C1213AD	289
C1213AK	289
C1213AKA	289
C1213AKB	289
C1213AKC	289
C1213AKD	289
C1213B	289
C1213BC	289
C1213C	289
C1213CD	289
C1213D	289
C1214	289
C1214A	289
C1214B	289
C1214C	289
C1214D	289
C1215	199
C1216	278
C1217	171
C1218	128
C1220E	128
C1222	199
C1222A	199
C1222B	199
C1222C	199
C1222D	199
C1222E	199
C1222U	199
C1226	186A
C1226-0	186A
C1226A	186A
C1226AC	186A
C1226AO	186A
C1226AP	186A
C1226AQ	186A
C1226AR	186A
C1226B	186A
C1226C	186A
C1226CF	186A
C1226D	186A
C1226F	186A
C1226L	186A
C1226-O	186A
C1226P	186A
C1226Q	186A
C1226QR	186A
C1226R	186A
C1226RL	186A
C1226RLP	186A
C1226RLQ	186A
C1226RLR	186A
C1232	289
C1235	124
C1237	235
C1237E	235
C1237H	235
C1237K	235
C1239	237
C1241	284
C1241A	284
C1243	300
C1243-24	300
C1243C	300
C1243C1	300
C1243C2	300
C1243D	300
C1243D1	300
C1243D2	300
C1243E	300
C1244	123A
C1247	128
C1247A	128
C1260	316
C1273	289
C1275	316
C1278	194
C1278S	194
C1279	287
C1279S	287
C1280	172A
C1280A	172A
C1280AS	172A
C1280S	172A
C1293A(Last IF)	233
C1293B	233
C1293B(Last IF)	233
C1295	165
C1295A	165
C1295-O	165
C1303	346
C1304	124
C1304BK	124
C1306	235
C1306/1	235
C1306-1	235
C1306I	235
C1306K	235
C1307	236
C1307-1	236
C1307I	236
C1307K	236
C1308	238
C1308K	238
C1308N	238
C1309	165
C1312	199
C1312E	199
C1312F	199
C1312G	199

To Be Replaced	ECG Replacement
C1312H	199
C1312R	199
C1312Y	199
C1312YF	199
C1312YG	199
C1312YH	199
C1313	199
C1313F	199
C1313G	199
C1313H	199
C1313Y	199
C1313YF	199
C1313YG	199
C1313YH	199
C1316	277
C1317	289
C1317B	289
C1317D	289
C1317P	289
C1317Q	289
C1317R	289
C1317S	289
C1317T	289
C1318	297
C1318C	297
C1318PQR	297
C1318Q	297
C1318QR	297
C1318R	297
C1318S	297
C1318T	297
C1318X	297
C1324	278
C1325	165
C1325A	165
C1325AK	165
C1325AL	165
C1327	199
C1327FS	199
C1327R	199
C1327S	199
C1327T	199
C1327T/U	199
C1327TV	199
C1327U	199
C1327XAN	199
C1327Y	199
C1328	199
C1328T	199
C1328U	199
C1330	192A
C1330A	192A
C1330B	192A
C1330C	192A
C1330D	192A
C1330L	192A
C1330R	192A
C1335	199
C1335A	199
C1335B	199
C1335C	199
C1335D	199
C1335E	199
C1335F	199
C1336Q	186A
C1341	229
C1342	229
C1342A	229
C1342B	229
C1342C	229
C1343	280
C1343A	280
C1343B	280
c1343C	280
C1343H	280
C1343HA	280
C1343HB	280
C1344	199
C1344C	199
C1344D	199
C1344E	199
C1344F	199
C1345	199
C1345C	199
C1345F	199
C1346	192
C1346R	192
C1346S	192
C1347	192
C1347Q	192
C1347R	192
C1347S	192
C1348	238
C1353C	1246
C1358	165
C1358K	165
C1358L	238
C1358M	238
C1358P	165
C1358Q	165
C1358R	165
C1359	229
C1359A	229
C1359B	229
C1359b	199
C1359BC	229
C1359C	229
C1359D	229
C1359Q	229
C1360	107
C1360I	107
C1361	123A
C1362	123A
C1363	123A
C1364	123A

To Be Replaced	ECG Replacement
C1364-4	123A
C1364-6	123A
C1364A	123A
C1364P	123A
C1367	164
C1367A	164
C1368	184
C1368C	184
C1368D	184
C1368P	184
C1369	199
C1372Y	123A
C1377	236
C1380C	1196
C1380C(IC)	1196
C1380(IC)	1196
C1382	157
C1382-0	157
C1382-O	157
C1382Y	157
C1383	293
C1383B	293
C1383C	293
C1383P	293
C1383PQR	293
C1383Q	293
C1383R	293
C1383RS	293
C1383S	293
C1383X	293
C1384	293
C1384Q	293
C1384R	293
C1384S	293
C1386C	184
C1390A	107
C1390F	123A
C1390H	123A
C1390I	123A
C1390J	123A
C1390K	123A
C1390V	123A
C1390W	123A
C1390WH	123A
C1390WI	123A
C1390WX	123A
C1390WY	123A
C1390X	123A
C1390XJ	123A
C1390XK	123A
C1390YM	123A
C1391	124
C1391VL	124
C1393	229
C1393K	229
C1393L	229
C1393M	229
C1394	107
C1394L	107
C1396	316
C1396M	316
C1398	152
C1398P	152
C1398Q	152
C1399E	199
C1402	280
C1407	192
C1407P	192
C1407R	192
C1407S	192
C1407X	192
C1409	291
C1409A	291
C1409AA	291
C1409AB	291
C1409AC	291
C1409B	291
C1409C	291
C1410	291
C1410A	291
C1410AA	291
C1410AB	291
C1410AC	291
C1410B	291
C1410C	291
C1413	165
C1413A	165
C1416	199
C1416BL	199
C1417	107
C1417C	107
C1417D	107
C1417D(U)	107
C1417DU	107
C1417F	107
C1417G	107
C1417H	107
C1417U	107
C1417V	107
C1417VW	107
C1417W	107
C1418	152
C1418A	152
C1418B	152
C1418C	152
C1418D	152
C1419	152
C1419A	152
C1419B	152
C1419C	152
C1419D	152
C1424	316
C1429	128
C1429-1	128
C1429-2	128

To Be Replaced	ECG Replacement
C1433	283
C1436	283
C1437	100
C1438	100
C1440	283
C1441	283
C1444	291
C1446	190
C1446B	198
C1446C	198
C1446LB	198
C1446LL	198
C1446PQ	198
C1446Q	198
C1447	376
C1447-0	198
C1447A	198
C1447BK	198
C1447/FA-2	198
C1447GL3	198
C1447LB	198
C1447-O	198
C1447R	198
C1448	291
C1448A	291
C1448LB	291
C1448P	291
C1448Q	291
C1448R	291
C1448S	291
C1449	295
C1449(C.B.)	295
C1449L	295
C1449M	295
C1450S	152
C1454	162
C1456K	124
C1458	778
C1467	199
C1472K	172A
C1473P	287
C1473Q	287
C1473R	287
C1474	293
C1474-3	293
C1474-4	293
C1474HK	293
C1474J	293
C1474KD	293
C1474S	282
C1475	315
C1475-1	315
C1475-2	315
C1475-3	315
C1475-4	315
C1475A	315
C1475D	315
C1475E	315
C1475H	315
C1475HE	315
C1475J	315
C1477	283
C1501	288
C1501P	157
C1501Q	157
C1501R	157
C1505	198
C1505-1	198
C1505A	198
C1505I	198
C1505K	198
C1505L	198
C1505LA	198
C1505M	198
C1506	198
C1506K	198
C1506L	198
C1506M	198
C1507	198
C1507A	198
C1507H	198
C1507I	198
C1507K	198
C1507L	198
C1507LK	198
C1507LM	198
C1507M	198
C1507R	198
C1509	297
C1509P	297
C1509Q	297
C1509R	297
C1509S	297
C1514	198
C1514B	198
C1514BK	198
C1514BVC	198
C1514CVC	198
C1515	287
C1515C	287
C1515K	287
C1518	293
C1518R	293
C1518S	293
C1519	198
C1520	198
C1520-1	198
C1520-1A	198
C1520-3A	198
C1520EK	198
C1520EX	198
C1520I	198
C1520K	198
C1520K-1	198
C1520KL	198

To Be Replaced	ECG Replacement
C1520KLE	198
C1520L	198
C1520L-1	198
C1520M	198
C1520M-1	198
C1521K	198
C1521L	198
C1521LM	198
C1521M	198
C1537	199
C1537B	199
C1537-O	199
C1537S	199
C1538	199
C1538A	199
C1538S	199
C1538SA	199
C1541E	123A
C1542	123A
C1547	316
C1566	157
C1566F	157
C1567	295
C1567P	295
C1567R	295
C1568S	184
C1569	198
C1569-0	198
C1569BK	198
C1569/FA-1	198
C1569-FA3	198
C1569/FA-3	198
C1569-FA4	198
C1569K	198
C1569LB	198
C1569LBQ	198
C1569LBR	198
C1569LBY	198
C1569-O	198
C1569O	198
C1569Q	198
C1569R	198
C1569-R	198
C1569Y	198
C1569-Y	198
C1570	123A
C1570G	123A
C1570LG	123A
C1570LH	123A
C1571	123A
C1571G	123A
C1573	287
C1573P	287
C1573Q	287
C1573R	287
C1576	283
C1578	283
C1586	327
C1588	278
C1589	299
C1617	283
C1618	130
C1618B	130
C1618G	130
C1619	280
C1620-Y	190
C1624	291
C1624-O	291
C1624-Y	291
C1625	291
C1625-0	198
C1625-LBGL1	198
C1625-O	291
C1627-0	128
C1627-Y	128
C1627Y	128
C1628	190
C1628-O	190
C1629A	238
C1629M	181
C1632	199
C1633	199
C1634	123A
C1634HC	123A
C1634P	123A
C1634Y	123A
C1636	108
C1636E	108
C1636H	108
C1636Ja	108
C1636JA	108
C1636JG	108
C1636JK	108
C1639	123A
C1641	123A
C1641D	123A
C1641Q	123A
C1641R	108
C1647	199
C1647Q	199
C1647R	199
C1647RY	199
C1648	199
C1648E	199
C1648EF	199
C1648EY	199
C1648RT	199
C1648S	199
C1648SE	199
C1648SH	199
C1658Q	194
C1663	188
C1663A	188
C1663H	188
C1664	274

To Be Replaced	ECG Replacement
C1664A	274
C1664O	274
C1664-OR	274
C1664OR	274
C1664R	274
C1667	284
C1669	198
C1670	293
C1670E	190
C1670H	190
C1670Ha	190
C1670HM	190
C1670J	190
C1670JA	190
C1670JC	190
C1670JD	190
C1670JE	190
C1670JW	293
C1672	229
C1673	229
C1673L	229
C1674	107
C1674K	107
C1674L	107
C1674M	107
C1674-M	107
C1675	229
C1675B	229
C1675K	229
C1675K2	229
C1675KZ	229
C1675L	229
C1675(L)	229
C1675M	229
C1675Z	229
C1676	320
C1678	235
C1678B	235
C1678b	235
C1678C	235
C1678D	235
C1678E	235
C1678H	235
C1678I	235
C1678J	235
C1678L	235
C1678N	235
C1678-O	235
C1678T	235
C1679	235
C1681	199
C1681B	199
C1681BL	199
C1681GR	199
C1681V	199
C1682V	199
C1683A	198
C1683LA	198
C1683P	198
C1683Q	198
C1683R	198
C1684	199
C1684BL	199
C1684-O	199
C1684P	199
C1684Q	199
C1684R	199
C1684RST	199
C1684S	199
C1684T	199
C1685	199
C1685-0	199
C1685P	199
C1685Q	199
C1685S	199
C1685ST	194
C1685T	194
C1686	229
C1686B	229
C1686C	229
C1686V	229
C1687	123A
C1687C	123A
C1687(Last IF)	233
C1687Q	123A
C1688	123A
C1695	229
C1722	198
C1722BK	198
C1722BKS	198
C1722S	198
C1723	198
C1723-02	198
C1728	302
C1728-3	302
C1728D	302
C1728H	302
C1730	316
C1730L	316
C1730(L)	107
C1738	316
C1739	123A
C1740	123AP
C1740C	123AP
C1740D	123AP
C1740L	123AP
C1740LN	123AP
C1740LNS	123AP
C1740P	123AP
C1740Q	123AP
C1740R	123AP
C1740RL	123AP
C1740RM	123AP
C1740S	123AP
C1741	293

To Be Replaced	ECG Replacement
C1741Q	128
C1749	198
C1749XD	198
C1752	287
C1753	287
C1755	198
C1755A	198
C1755C	198
C1756	198
C1756A	198
C1756C	198
C1756D	198
C1756K	198
C1756M	198
C1756MC	198
C1756N	198
C1756-O	198
C1757	198
C1760	306
C1760/2	306
C1760-2	306
C1760-3	306
C1760/4	306
C1760-4	306
C1760E	306
C1760H	306
C1760HY	306
C1761	306
C1766C	199
C1766D	199
C1773	123AP
C1774	123AP
C1775AE	123A
C1775AF	123A
C1775E	123A
C1775F	123A
C1777	130
C1788	128
C1788R	128
C1815	123AP
C1815-0	123AP
C1815G	123AP
C1815GR	123AP
C1815O	123AP
C1815Y	123AP
C1816	236
C1816E	236
C1816H	236
C1816HM	236
C1817	236
C1819	198
C1819RL	198
C1821	154
C1826-0	196
C1826F	196
C1826P	196
C1826Q	196
C1826R	196
C1826Y	196
C1827	291
C1828	369
C1828B	175
C1828R	175
C1829	162
C1829C	229
C1845Q	306
C1845R	306
C1845S	306
C1846	295
C1846-7	295
C1846B	295
C1846P	295
C1846Q	295
C1846-Q	295
C1846QRS	295
C1846R	295
C1846S	295
C1846-Y	295
C1847	295
C1847-0	295
C1847Q	295
C1847QR	295
C1847R	295
C1847V	295
C1847VQ	295
C1848	186A
C1848Q	186
C1848R	186
C1851	128
C1853B	123A
C1853C	123A
C1854	199
C1854C	199
C1854R	199
C1854S	199
C1855	108
C1856	123A
C1856M	123A
C1866	328
C1867	283
C1869	284
C1870	283
C1875	165
C1875K	165
C1875L	165
C1890A	375
C1890AD	375
C1890AE	375
C1890AF	375
C1890E	375
C1890F	375
C1891	165
C1893	165
C1893FA-1	165
C1894	238

To Be Replaced	ECG Replacement
C1894K	238
C1894N	238
C1900	108
C1903	306
C1905	198
C1905(LB)	198
C1906	108
C1906A	108
C1906B	108
C1906K	108
C1908	229
C1908E	229
C1908H	229
C1909	235
C1909K	235
C1909R	235
C1909S	235
C1921	191
C1922	238
C1923	229
C1923-0	229
C1923A	229
C1923BN	229
C1923R	229
C1929	198
C1929Q	198
C1929R	198
C1941	287
C1942	165
C1944	236
C1945	236
C1945A	236
C1952	295
C1957	295
C1957B	295
C1957K	295
C1959	123AP
C1959-0	123AP
C1959-Y	123AP
C1959Y	123AP
C1962	302
C1962-0	302
C1962H	302
C1962-O	302
C1964	236
C1964D	235
C1969	236
C1969B	236
C1969H	236
C1972	343
C1973	315
C1974	235
C1974-5	235
C1974C	235
C1975	235
C1975Q	235
C1983	152
C1990B	229
C1990C	229
C2000	123A
C2001K	123A
C2001L	297
C2002	1232
C2003P(HEP)	9917
C2005P(HEP)	9989
C2009	161
C2009J	161
C2012	107
C2018	283
C2019	283
C2020	235
C2021	123A
C2028	295
C2028/1	295
C2028/2	295
C2028-2	295
C2028/2	295
C2028A	295
C2028A/20	295
C2028B	295
C2028B/20	295
C2028-B/20	295
C2028-B/B/20	295
C2029	235
C2029/1	235
C2029-1	235
C2029/2	235
C2029/3	235
C2029-3	235
C2029B	235
C2029B/10	235
C2029-B/10	235
C2029B/B/10	235
C2029C	235
C2036	373
C2043	236
C2057	319
C2057C	319
C2057D	319
C2057F	161
C2060	293
C2060Q	293
C2068	198
C2068FA-1	198
C2068LB	198
C2073	375
C2073A	375
C2073Y	375
C2074	322
C2074C	322
C2074Y	322
C2075	235
C2075J	235
C2075K	235
C2076	123AP

To Be Replaced	ECG Replacement
C2076B	123AP
C2076B(CB)	295
C2076BC	123AP
C2076BC(CB)	295
C2076C	123AP
C2076C(CB)	295
C2076CB	123AP
C2076(CB)	295
C2076CB(CB)	295
C2076CD	123AP
C2076CD(CB)	295
C2076D	123AP
C2076D(CB)	295
C2078	235
C2078E	236
C2079	295
C2079E	295
C2081	293
C2085P	198
C2085PQ	198
C2085Q	198
C2086	293
C2086D	293
C2091	295
C2091D	295
C2092	235
C2092D	235
C2094	139A
C2098	236
C2120	128
C2120-0	128
C2120-Y	128
C2120Y	297
C2146	235
C2166	235
C2166D	235
C2184	235
C2194	188
C2195	236
C2228	287
C2228C	287
C2228D	287
C2229-0	297
C2229-O	287
C2229O	287
C2236	295
C2236-0	295
C2236Y	295
C2242	198
C2258	198
C2314	295
C2538-11	123A
C3000L(HEP)	7400
C3000P	7400
C3001	1192
C3001-0	1192
C3001A	1192
C3001L(HEP)	7401
C3001-O	1192
C3001P	7401
C3002P	7402
C3004L(HEP)	7404
C3004P	7404
C3010L(HEP)	7410
C3010P	7410
C3020L(HEP)	7420
C3020P	7420
C3030L(HEP)	7430
C3030P	7430
C3040L(HEP)	7440
C3040P	7440
C3041L(HEP)	7441
C3041P	7441
C3050L(HEP)	7450
C3050P	7450
C3073L(HEP)	7473
C3073P	7473
C3075L(HEP)	7475
C3075P	7475
C3123	108
C3800	107
C3800L(HEP)	7490
C3800P	7490
C3801L(HEP)	7492
C3801P	7492
C3806P(HEP)	974
C4000P(HEP)	4001B
C4001P(HEP)	4011B
C4002P(HEP)	4023B
C4003P(HEP)	4025B
C4011	137A
C4015	139A
C4016	140A
C4018	142A
C4020	145A
C4020P(HEP)	4013B
C4021P(HEP)	4027B
C4026	146A
C4030P(HEP)	4017B
C4040P(HEP)	4042B
C4050P(HEP)	4016B
C4055P(HEP)	4556B
C-4401	177
C5005	109
C5359	108
C6001	760
C6002	774
C6003	752
C6003P(HEP)	752
C6004	771
C6007	754
C6008	769
C6009	766A
C6009P(HEP)	766A
C6010	753

To Be Replaced	ECG Replacement
C6010P(HEP)	753
C6011	761
C6012	762
C6013	755
C6014	756
C6015	767
C6016C(HEP)	796
C6016(HEP)	796
C6017	773
C6019	754
C6050G(HEP)	973
C6052G(HEP)	941
C6052P	941M
C6055L	725
C6056P	722
C6057P	790
C6059P	746
C6060P	748
C6061P	750
C6062P	708
C6063P	712
C6065P	719
C6066P	798
C6067G	707
C6067P(HEP)	707
C6068P	720
C6069G	780
C6069P(HEP)	780
C6070P	714
C6071P	715
C6072P	739
C6073P(HEP)	814
C6074P	718
C6075P	738
C6076P	749
C6077P	782
C6079P	747
C6080P	721
C6081P	779
C6082P	708
C6083P	712
C6085P	731
C6089	705A
C6090	804
C6091	816
C6091G(HEP)	816
C6095P(HEP)	720
C6096P	801
C6099P	795
C6100P	783
C6101P	723
C6102P	778
C6103P	909
C6105(HEP)	972
C6107P(HEP)	975
C6110P(HEP)	960
C6111P(HEP)	962
C6112P(HEP)	964
C6113P(HEP)	966
C6114P(HEP)	968
C6116P(HEP)	972
C6118P(HEP)	961
C6120P(HEP)	963
C6122P(HEP)	967
C6123P(HEP)	969
C6130P(HEP)	955
C6131P(HEP)	978
C6132(HEP)	977
C6644H	199
C6939GK	199
C7160	306
C7335-BL	123A
C7336R	199
C7350RN	123A
C7400P(HEP)	7400
C7401P(HEP)	7401
C7402P(HEP)	7402
C7403P(HEP)	7403
C7404P(HEP)	7404
C7405P(HEP)	7405
C7406P(HEP)	7406
C7407P(HEP)	7407
C7408P(HEP)	7408
C7409P(HEP)	7409
C7410P(HEP)	7410
C7411P(HEP)	7411
C7413P(HEP)	7413
C7414P(HEP)	7414
C7416P(HEP)	7416
C7417P(HEP)	7417
C7420P(HEP)	7420
C7423P(HEP)	7423
C7425P(HEP)	7425
C7426P(HEP)	7426
C7427P(HEP)	7427
C7430P(HEP)	7430
C7432P(HEP)	7432
C7437P(HEP)	7437
C7438P(HEP)	7438
C7440P(HEP)	7440
C7445P(HEP)	7445
C7446AP(HEP)	7446
C7447AP(HEP)	7447
C7448P(HEP)	7448
C7454P(HEP)	7454
C7460P(HEP)	7460
C7470P(HEP)	7470
C7472P(HEP)	7472
C7473P(HEP)	7473
C7474P(HEP)	7474
C7475P(HEP)	7475
C7483P(HEP)	7483
C7485P(HEP)	7485
C7486P(HEP)	7486
C7490AP(HEP)	7490

To Be Replaced	ECG Replacement
C7491AP(HEP)	7491
C7492AP(HEP)	7492
C7493AP(HEP)	7493A
C7495P(HEP)	7495
C7496P(HEP)	7496
C7840	229
C9080	129
C9081	129
C9082	159
C9083	159
C9084	159
C9085	159
C9426	229
C9604	123A
C9633	199
C9634	199
C10110	116
C10159	116
C10176	116
C10215-2	160
C10227	102A
C10230-3	102A
C10258	160
C10260	160
C10261	160
C10262	160
C10279-1	123A
C10279-3	123A
C10291	126
C10963ZM	186A
C10964ZL	186A
C11021	102A
C13901	123A
C15694	198
C21382	116
C21383	139A
C21480	109
C23018	519
C36566	223
C36577	129
C36578	161
C36579	128
C36580	123A
C-36582	133
C36583	152
C41001	129
C44189	910
C74107P(HEP)	74107
C74121P(HEP)	74121
C74123P(HEP)	74123
C74125P(HEP)	74125
C74141P(HEP)	74141
C74145P(HEP)	74145
C74150P(HEP)	74150
C74151AP(HEP)	74151
C74153P(HEP)	74153
C74154P(HEP)	74154
C74155P(HEP)	74155
C74156P(HEP)	74156
C74160AP(HEP)	74160
C74161AP(HEP)	74161
C74162AP(HEP)	74162
C74163AP(HEP)	74163
C74164P(HEP)	74164
C74165P(HEP)	74165
C74166P(HEP)	74166
C74170P(HEP)	74170
C74174P(HEP)	74174
C74175P(HEP)	74175
C74176P(HEP)	74176
C74177P(HEP)	74177
C74180P(HEP)	74180
C74181P(HEP)	74181
C74182P(HEP)	74182
C74190P(HEP)	74190
C74191P(HEP)	74191
C74192P(HEP)	74192
C74193P(HEP)	74193
C74195P(HEP)	74195
C74196P(HEP)	74196
C74197P(HEP)	74197
C74198P(HEP)	74198
C74199P(HEP)	74199
C248507	116
C255110-011	177
C256125-011	519
C1945295DY1	123A
C2475078-3	108
C2485076-3	128
C2485077-2	128
C2485078-1	108
C2485079-1	108
C6141990	177
C6862400	123A
C532000585	234
C-F8	237
CA-092	139A
CA2D2	102A
CA10	116
CA20	116
CA31G8E	2024
CA50	116
CA90	177
CA100	116
CA102BA	116
CA102DA	116
CA102FA	116
CA102HA	116
CA102MA	116
CA102PA	125
CA102RA	125
CA102VA	125
CA150	116
CA152VA	125
CA200	116

To Be Replaced	ECG Replacement
CA201AT	1171
CA201T	1171
CA224E	987
CA224G	987
CA239AE	834
CA239AG	834
CA239E	834
CA239G	834
CA250	116
CA301AE	975
CA301AT	1171
CA301E	975
CA307E	976
CA324E	987
CA324G	987
CA339AE	834
CA339AG	834
CA339E	834
CA339G	834
CA344V1	711
CA555CE	955M
CA555CG	955M
CA741CE	941M
CA741CG	941M
CA741CS	941M
CA741CT	941
CA747CE	947D
CA747CF	947D
CA747CG	947D
CA747CT	947
CA748CT	1171
CA758E	743
CA758E	743
CA810M	1115
CA810Q	1115A
CA1020A	116
CA1310E	801
CA1352E	749
CA1365	712
CA1391E	815
CA1398E	738
CA1458E	778
CA1458G	778
CA1458S	778
CA2002	1232
CA2065	712
CA2111AE	708
CA2111AQ	708
CA2111E	708
CA3000	900
CA3000T	900
CA3001	901
CA3001T	901
CA3010	903
CA3010A	903
CA3010AT	903
CA3010T	903
CA3011	726
CA3011T	726
CA3012	726
CA3012T	726
CA3013	704
CA3013T	704
CA3014	704
CA3014T	704
CA3015	903
CA3015A	903
CA3015AT	903
CA3015T	903
CA3018	904
CA3018A	904
CA3018T	904
CA3019	905
CA3019T	905
CA3020	784
CA3020A	784
CA3020AT	784
CA3020B	784
CA3020T	784
CA3026	906
CA3026T	906
CA3028	724
CA3028A	724
CA3028AF	724
CA3028AS	724
CA3028AT	724
CA3028B	724
CA3028BF	724
CA3028BS	724
CA3028T	724
CA3029	908
CA3029E	908
CA3030	908
CA3030A	908
CA3030AE	908
CA3030E	908
CA3035	785
CA3035T	785
CA3035V	785
CA3035V1	785
CA3037	908
CA3037A	908
CA3037AE	908
CA3037E	908
CA3038	908
CA3038A	908
CA3038AE	908
CA3038E	908
CA3039	907
CA3039T	907
CA3041	706
CA3041T	706
CA3042	710
CA3042E	710
CA3043	786

To Be Replaced	ECG Replacement
CA3043T	786
CA3044	711
CA3044T	711
CA3044V1	711
CA3045	912
CA3045E	912
CA3045F	912
CA3046	912
CA3046E	912
CA3047	913
CA3047A	913
CA3047E	913
CA3048	727
CA3049	906
CA3049T	906
CA3052	727
CA3052E	727
CA3053	724
CA-3053	724
CA3053T	724
CA3054	917
CA3054E	917
CA3056	941
CA3056A	913
CA3056AE	913
CA3058	914
CA3058E	914
CA3059	914
CA3059E	914
CA3064	780
CA3064/5A	780
CA3064E	783
CA3064T	780
CA3065	712
CA3065/7F	712
CA3065E	712
CA3065F	712
CA3065F.C.	712
CA3065FC	712
CA3065RCA	712
CA3066	728
CA3066AE	728
CA3066E	728
CA3067	729
CA3067AE	729
CA3067E	729
CA3068	730
CA3070	714
CA3070E	714
CA3070G	714
CA3070-G	714
CA3070G	714
CA3071	715
CA3071E	715
CA3072	790
CA3072E	790
CA3075	723
CA3075D	723
CA3075E	723
CA3076	781
CA3076T	781
CA3079	914
CA3079E	914
CA3081	916
CA3081E	916
CA3086	912
CA3086E	912
CA3088E	787
CA3089E	788
CA3089F	788
CA3090AQ	789
CA3090E	789
CA3090Q	789
CA3120E	731
CA3121E	791
CA3121E-G	791
CA3121G	791
CA3123E	744
CA3125E	798
CA3126EM	797
CA3126EM1	797
CA3126EMI	797
CA3126Q	797
CA3134	1175
CA3134EM	1175
CA3134GQM	1175
CA3134Q	1175
CA3134QM	1175
CA3135G	818
CA3137	1176
CA3137E	1176
CA3137EM	1176
CA3137EM1	1176
CA3137EMI	1176
CA3139E	1174
CA3139Q	1174
CA3143	1177
CA3143E	1177
CA3144G	985
CA3151G	986
CA3156	822
CA3159	820
CA3168E	2024
CA3170E	982
CA3172	821
CA3172G	821
CA3189E	788
CA3221	819
CA3221G	819
CA3741	941
CA3741CS	941
CA3741CT	941
CA3741S	941
CA3741T	941
CA3747CT	947

To Be Replaced	ECG Replacement
CA3748CT	1171
CA-9011H	123A
CA-9016	108
CA30900	789
CAM-12	123A
CAM-GRN	6055
CB1F4	105
CB5	116
CB10	116
CB20	116
CB50	116
CB100	156
CB103	126
CB106	109
CB150	116
CB156	160
CB157	126
CB158	126
CB161	102A
CB163	109
CB200	116
CB244	160
CB246	123A
CB248	102A
CB249	102A
CB250	116
CB254	160
CB393	109
CC102BA	116
CC102DA	116
CC102FA	116
CC102HA	116
CC102KA	116
CC102MA	116
CC102PA	125
CC102RA	125
CC102VA	125
CC152VA	125
CC1168F	123A
CCS1235G	123A
CCS2001H	123A
CCS2004	123A
CCS2004B	199
CCS2004D303	199
CCS2005B	159
CCS2006D	108
CCS2008F015	108
CCS4004	123A
CCS6168	123A
CCS6168F	123A
CCS6168G	128
CCS6225F	161
CCS6226G	161
CCS6227F	161
CCS6228F	159
CCS6229H	128
CCS9015	159
CCS9016D	108
CCS9016E	108
CCS9017	161
CCS9017G925	161
CCS9018E	123A
CCS9018F	108
CCS9018H924	161
CD-0000	109
CD0000/7825B	109
CD-0000N	109
CD0000NC	177
CD000	109
CD005	116
CD-00-9	177
CD0014(Morse)	177
CD-0014N	109
CD0014NA	123A
CD0014NG	123A
CD0015N	123A
CD0021	123A
CD-0021	177
CD0033	137A
CD05	116
CD0120	136A
CD2	116(2)
CD-2N	116
CD-4	116
CD4	116
CD-20	177
CD31-00002	134A
CD31-00006	135A
CD31-00007	136A
CD31-00008	137A
CD31-00012	139A
CD31-00015	142A
CD31-00017	145A
CD31-00023	146A
CD31-00025	147A
CD31-10361	146A
CD31-10365	145A
CD31-12019	139A
CD31-12022	142A
CD31-12024	145A
CD31-12030	146A
CD31-12032	147A
CD31-12039	139A
CD-37	177
CD37	177
CD-37	177
CD-37A	177
CD37A	177
CD37A2	116
CD38	123A
CD48	136A
CD73/187/72	7493A
CD73/187/73	74H30
CD101	109
CD437	159

To Be Replaced	ECG Replacement
CD441	199
CD445	159
CD446	123A
CD461	130
CD461-014-614	130
CD500	234
CD522	218
CD541	909
CD562	199
CD600	177
CD1111	116
CD1112	116
CD1113	116
CD1114	116
CD1115	116
CD1116	116
CD1117	116
CD1121	116
CD1122	116
CD1123	116
CD1124	116
CD1125	116
CD1126	116
CD1127	116
CD1141	116
CD1142	116
CD1143	116
CD1147	116
CD1148	116
CD1149	116
CD1224	177
CD1616	363
CD1617	364
CD2300E	9930
CD2300E/830	9930
CD2301E	9961
CD2301E/861	9961
CD2302E	9946
CD2302E/846	9946
CD2303E	9949
CD2303E/849	9949
CD2304E	9945
CD2304E/845	9945
CD2305E	9948
CD2305E/848	9948
CD2306E	9932
CD2306E/832	9932
CD2307E	9944
CD2307E/844	9944
CD2308E	9962
CD2308E/862	9962
CD2309E	9963
CD2309E/863	9963
CD2310E	9936
CD2310E/836	9936
CD2311E/837	9937
CD2312E	9935
CD2314E	9933
CD2314E/833	9933
CD2315E	9093
CD2318E	9099
CD2545	317
CD3080	317
CD3122	135A
CD3171	149A
CD3174	150A
CD4000AE	4000
CD4000AZ	4000
CD4000C	4000
CD4001	4001B
CD4001AE	4001B
CD4001BC	4001B
CD4001C	4001B
CD4001CN	4001B
CD4002AE	4002B
CD4002C	4002B
CD4006	4006B
CD4006B	4006B
CD4006BE	4006B
CD4007UBC	4007B
CD4008	4008B
CD4008B	4008B
CD4008BE	4008B
CD4009AE	4049B
CD4011	4011B
CD4011AE	4011B
CD4011BC	4011B
CD4011C	4011B
CD4012AE	4012B
CD4012C	4012B
CD4013	4013B
CD4013AE	4013B
CD4013BC	4013B
CD4014AE	4014B
CD4014C	4014B
CD4015AE	4015B
CD4015C	4015B
CD4016AE	4016B
CD4016B	4016B
CD4016C	4016B
CD4017AE	4017B
CD4017BC	4017B
CD4018	4018B
CD4019AE	4019B
CD4019BC	4019B
CD4020AE	4020B
CD4020BC	4020B
CD4021AE	4021B
CD4021C	4021B
CD4022	4022B
CD4022B	4022B
CD4022BE	4022B
CD4023AE	4023B
CD4023BC	4023B
CD4023C	4023B

To Be Replaced	ECG Replacement
CD4024AE	4024B
CD4024B	4024B
CD4024BC	4024B
CD4025AE	4025B
CD4025BC	4025B
CD4025C	4025B
CD4027AE	4027B
CD4027BC	4027B
CD4028AE	4028B
CD4028BC	4028B
CD4029AE	4029B
CD4029BC	4029B
CD4030AE	4030B
CD4030C	4030B
CD4034	4034B
CD4034B	4034B
CD4034BE	4034B
CD4035	4035B
CD4035B	4035B
CD4040AE	4040B
CD4040BC	4040B
CD4042AE	4042B
CD4042BC	4042B
CD4043	4043B
CD4043B	4043B
CD4043BE	4043BE
CD4044	4044B
CD4044B	4044B
CD4044BE	4044B
CD4046A	980
CD4049AE	4049B
CD4049BC	4049B
CD4050AE	4050B
CD4050BC	4050B
CD4051AE	4051B
CD4051BC	4051B
CD4052AE	4052B
CD4052BC	4052B
CD4053	4053B
CD4053B	4053B
CD4053BE	4053B
CD4055AE	4055B
CD4060	4060B
CD4060B	4060B
CD4060BE	4060B
CD4066	4066B
CD4066B	4066B
CD4066BE	4066B
CD4068BE	4068B
CD4069BE	4069
CD4069C	4069
CD4069UB	4069
CD4069UBE	4069
CD4070BE	4030B
CD4071BC	4071B
CD4071BE	4071B
CD4073	4073B
CD4073BE	4073B
CD4075	4075B
CD4075B	4075B
CD4075BE	4075B
CD4076	4076B
CD4076B	4076B
CD4076BE	4076B
CD4077BE	4077B
CD4078BE	4078B
CD4081BC	4081B
CD4081BE	4081B
CD4085BE	4085B
CD4086BE	4086B
CD4093	4082B
CD4093B	4082B
CD4093BE	4093B
CD4099BC	4099B
CD4099BE	4099B
CD4116	142A
CD4117	142A
CD4118	142A
CD4121	142A
CD4122	142A
CD4510	4510B
CD4510B	4510B
CD4510BE	4510B
CD4511	4511B
CD4511BE	4511B
CD4511E	4511B
CD4514	4514B
CD4514B	4514B
CD4514BE	4514B
CD4515	4515B
CD4515B	4515B
CD4515BE	4515B
CD4516	4516B
CD4516B	4516B
CD4516BE	4516B
CD4518B	4518B
CD4518BC	4518B
CD4520B	4520B
CD4520BC	4520B
CD4527BC	4527B
CD4527BE	4527B
CD4555BE	4555B
CD4556BE	4556B
CD5002	519
CD5003	177
CD-5038	519
CD5328	9910
CD-5944	362
CD5945	363
CD5946	364
CD6016	519
CD6016-013-689	519
CD6019	123A
CD6039	9914
CD6150	123A

To Be Replaced	ECG Replacement
CD6153	128
CD6153-2	128
CD6157	123A
CD6161P1N013-75	519
CD6375	123A
CD-6439	911
CD7012	335
CD8000	123A
CD8000-1	123A
CD8457	177
CD9525	123A
CD10000-1E	159
CD12000	123A
CD13332	116
CD13333	116
CD13335	116
CD13336	116
CD13337	116
CD13338	116
CD13339	116
CD40100B	40100B
CD40100BE	40100B
CD40106	40106B
CD40106B	40106B
CD40106BE	40106B
CD40160BC	40160B
CD40161BC	40161B
CD40162BC	40162B
CD40163BC	40163B
CD40174BC	40174B
CD40175BC	40175B
CD40182	40182B
CD40182B	40182
CD40182BE	40182
CD40192	4510B
CD40192BC	40192B
CD40192BE	40192B
CD40193	40193B
CD40193B	40193B
CD40193BC	40193B
CD40193BE	40193B
CD40194BE	40194B
CD-84857	177
CD86003	177
CD860011	178MP
CD860037	177
CD-860037	116
CD3112039	139A
CD3122055	139A
CD3212055	5078A
CD3212055(Zener)	139A
CDC86X7-5	123A
CDC430	123A
CDC496	159
CDC731	132
CDC744	154
CDC745(Zenith)	123A
CDC746	123A
CDC746(Zenith)	159
CDC1201BC	123A
CDC2010	123A
CDC2010C	123A
CDC2010D	123A
CDC2510C	123A
CDC2510C-G	123A
CDC2510G	123A
CDC4023A130	123A
CDC5000	107
CDC5000-1B	108
CDC5008	128
CDC5028A	128
CDC5038A	108
CDC5071A	108
CDC5075B	108
CDC8000	123A
CDC8000-1	128
CDC8000-1B	123A
CDC8000-1C	128
CDC8000-1D	192
CDC-8000-1D	192
CDC8000-CM	128
CDC-8001	123A
CDC8001	123A
CDC8002	128
CDC8002-1	128
CDC8011B	123A
CDC8021	123A
CDC8054	123A
CDC9000-1	159
CDC9000-1B	129
CDC-9000-1B	129
CDC9000-1D	159
CDC-9000-1D	159
CDC9002	129
CDC9002-1C	128
CDC9002-18	128
CDC10000-1E	159
CDC12000-1C	123A
CDC12018C	123A
CDC12030B	107
CDC12077F	123A
CDC12112C	108
CDC12112D	108
CDC12112E	108
CDC12112F	108
CDC13000-1	123A
CDC-13000-1	123A
CDC13000-1B	123A
CDC13000-1C	123A
CDC13000-1D	123A
CDC-13000-1D	123A
CDC13000-18	123A
CDC13016A	123A
CDC13500-1	123A
CDC25100-6	123A

To Be Replaced	ECG Replacement
CDC120700	128
CDC4306813	123A
CDG00	177
CDG-00	177
CDG005	116
CDG00S	177
CDG025	177
CDG-20	177
CDG-20/494	177
CDG-21	177
CDG21	177
CDG-21	177
CDG22	177
CDG-22	177
CDG23	177
CDG24	177
CDG-24	177
CDG24/3490	177
CDG24S	177
CDG27	177
CDJ-00	177
CDQ1004	154
CDQ10001	123A
CDQ10002	123A
CDQ10003	123A
CDQ10004	123A
CDQ10005	123A
CDQ10006	123A
CDQ10007	123A
CDQ10008	123A
CDQ10009	123A
CDQ10010	123A
CDQ10011	128
CDQ10012	128
CDQ10013	154
CDQ10014	128
CDQ10015	154
CDQ10016	123A
CDQ10017	123A
CDQ10018	123A
CDQ10019	123A
CDQ10020	123A
CDQ10021	123A
CDQ10022	123A
CDQ10023	123A
CDQ10024	123A
CDQ10025	123A
CDQ10026	123A
CDQ10027	123A
CDQ10028	123A
CDQ10032	123A
CDQ10033	128
CDQ10034	154
CDQ10035	123
CDQ10036	123
CDQ10037	154
CDQ10045	154
CDQ10046	154
CDQ10047	154
CDQ10048	128
CDQ10049	154
CDQ10051	128
CDQ10052	128
CDQ10053	128
CDQ10057	128
CDQ10058	128
CDR-2	116
CDR-4	116
CDR69/121/207	911
CDT1309	121
CDT1310	121
CDT1311	121
CDT1319	121
CDT1320	121
CDT1321	121
CDT-1322	179
CDT1349	121
CDT1349A	121
CDT1350	121
CDT1350A	121
CDZ-9V	139A
CDZ-318-75	138A
CDZ15000	128
CDZ-C9V	139A
CE0360/7839	102A
CE0361/7839	102A
CE0362/7839	102A
CE0363/7839	158
CE0398/7839	116
CE0495/7839	109
CE37	177
CE502	116
CE504	116
CE506	116
CE508	125
CE510	125
CE4001B	123A
CE4001C	108
CE4001E	123A
CE4002D	129
CE4003D	128
CE4003E	123A
CE4004C	123A
CE4005C	159
CE4008B	229
CE4008C	229
CE4010D	108
CE4010E	108
CE213811	102A
CEC6050	116
CER68	116
CER67	116
CER67A	116
CER67B	116
CER67C	116

To Be Replaced	ECG Replacement
CER68	116
CER68A	116
CER68B	116
CER68C	116
CER69	116
CER69A	116
CER69B	116
CER69C	116
CER70	116
CER70A	116
CER70B	116
CER70C	116
CER71	116
CER71A	116
CER71B	116
CER71C	116
CER71CA	116
CER72	125
CER72A	125
CER72B	125
CER72C	125
CER72D	125
CER72F	125
CER73	125
CER73A	125
CER73B	125
CER73C	125
CER73D	125
CER73F	125
CER500	116
CER500A	116
CER500B	116
CER500C	116
CER670	116
CER670A	116
CER670B	116
CER670C	116
CER680	116
CER680A	116
CER680B	116
CER680C	116
CER690	116
CER690A	116
CER690B	116
CER690C	116
CER700	116
CER700A	116
CER700B	116
CER700C	116
CER710	116
CER710A	116
CER710B	116
CER710C	116
CER720	125
CER720A	125
CER720B	125
CER720C	125
CER730	125
CER730A	125
CER730B	125
CER730C	125
CF-092	139A
CF1	108
CF2	123A
CF-2	123A
CF3	610
CF5	123A
CF6	195A
CF8	237
CF11	313
CF14	233
CF102DA	116
CF102PA	125
CF102RA	125
CF102VA	156
CF152VA	156
CG1	123A
CG12E	109
CG64H	109
CG65H	109
CG66H	109
CG74H	109
CG86H	109
CG23018	519
CG24015A	9944
CGD462	109
CGD591	109
CGD685	109
CGD1029	109
CGE-50	160
CGE-51	160
CGE-52	102A
CGE-53	158
CGE-54	103A&158
CGE-60	319
CGE-61	233
CGE-62	199
CGE-63	192
CGE-64	172A
CGE-66	152
CGE-67	193
CGE-68	124
CGE-69	153
CGE-75	283
CGE-78MP	283
CGE-79	238
CGE-500	177
CGJ-1	506
CH119D	116
CH4734	136A
CH4735	137A
CHA4Z3.6	134A
CHA4Z5.1	135A
CHA4Z5.6	136A
CHAZ6.2	137A

To Be Replaced	ECG Replacement
CHAZ6.2A	137A
CHMZ3.6	134A
CHMZ5.1	135A
CHMZ5.6	136A
CHZ10	140A
CHZ10A	140A
CI-8.2	5072A
CI2711	123A
CI2712	123A
CI2713	123A
CI2714	123A
CI2923	123A
CI2924	123A
CI2925	123A
CI2926	123A
CI3390	123A
CI3391	123A
CI3391A	123A
CI3392	123A
CI3393	123A
CI3394	123A
CI3395	123A
CI3396	123A
CI3397	123A
CI3398	123A
CI3402	123A
CI3403	123A
CI3404	123A
CI3405	123A
CI3414	123A
CI3415	123A
CI3416	123A
CI3417	123A
CI3704	128
CI3705	128
CI3706	128
CI3900	123A
CI3900A	123A
CI3901	123A
CI4256	123A
CI4424	123A
CI4425	123A
CIC-300	124
CII-225-Q	130
CIJ70645	110
CIL511	108
CIL512	108
CIL513	108
CIL521	108
CIL522	108
CIL523	108
CIL531	108
CIL532	108
CIL533	108
CJ5201	123A
CJ5202	123A
CJ5203	123A
CJ5204	102A
CJ-5206	123A
CJ5206A	192
CJ-5207	123A
CJ-5208	123A
CJ5209	129
CJ5210	128
CJ5211	123A
CJ5212	123A
CJ5213	128
CJ5214	128
CJ5215	128
CK4	126
CK4A	126
CK13	102A
CK13A	102A
CK14	100
CK14A	100
CK16	100
CK16A	100
CK17	100
CK17A	100
CK22	102A
CK22A	102A
CK22B	102A
CK22C	102A
CK25	100
CK25A	100
CK26	100
CK26A	100
CK27	100
CK27A	100
CK28	126
CK28A	126
CK64	102A
CK64A	102A
CK64B	102A
CK64C	102A
CK65	102A
CK65A	102A
CK65B	102A
CK65C	102A
CK66	102A
CK66A	102A
CK66B	102A
CK66C	102A
CK67	102A
CK67A	102A
CK67B	102A
CK67C	102A
CK261	101
CK262	101
CK419	128
CK422	128
CK474	128
CK475	128
CK476	108
CK477	108

To Be Replaced	ECG Replacement
CK661	100
CK662	100
CK705	109
CK706	109
CK706A	109
CK706P	109
CK710	112
CK715	109
CK721	102
CK722	102
CK725	102
CK727	102
CK731	112
CK751	102
CK754	102
CK759	100
CK759A	100
CK760	100
CK760A	100
CK761	100
CK762	126
CK766	126
CK766A	126
CK768	100
CK776	100
CK776A	100
CK790	102
CK791	102
CK793	102
CK794	102
CK870	102
CK871	102
CK872	102
CK875	102
CK878	102
CK879	102
CK882	102
CK888	102
CK891	102A
CK892	102A
CK942	159
CL05	116
CL010	116
CL025	116
CL1	116
CL1.5	116
CL2	116
CL3	116
CL4	116
CL5	116
CL6	116
CL7	116
CL8	116
CL110	3028
CL-110	3028
CL110A	3028
CL-110A	3028
CII73Y	152
CLM05	116
CLM1	116
CLR2060	3036
CLR2081	3036
CM	113
CM03MC14011CP	4011B
CM05-MM64C00N	4011B
CM0770	128
CM0SMC14011CP	4011B
CM0SMM74C00N	74C00
CM0STC4011P	4011B
CM4-83-2	3025
CM4-84B-0	3020
CM4-100	3050
CM4-101	3051
CM4-110	3050
CM4-111	3051
CM4-284B	3022
CM4-484B	3023
CM4-584B	3021
CM-9	736
CM10-12A	365
CM20-12A	366
CM25-12	366
CM30-12A	367
CM40-12	367
CM45-12A	367
CM50-12A	368
CM60-12A	368
CM603	466
CM643	466
CM647	466
CM2550	121
CM4000AE	4000
CM4001AE	4001B
CM4002AE	4002B
CM4006	4006B
CM4008	4008B
CM4011AE	4011B
CM4012AE	4012B
CM4013AE	4013B
CM4017AE	4017B
CM4018	4018B
CM4019AE	4019B
CM4020AE	4020B
CM4022	4022B
CM4023AE	4023B
CM4025AE	4025B
CM4027AE	4027B
CM4028AE	4028B
CM4029AE	4029B
CM4030AE	4030B
CM4034	4034B
CM4035	4035B
CM4040AE	4040B
CM4044	4044B
CM4046	980

To Be Replaced	ECG Replacement
CM4049AE	4049B
CM4050AE	4050B
CM4053	4053B
CM4063	4063B
CM4066	4066B
CM4073	4073B
CM4076	4076B
CM4511	4511B
CM4514	4514B
CM4515	4515B
CM4518	4518B
CM4520	4520B
CMC334-423	123A
CMO3MC14011CP	4011B
CMOSMC14011CP	4011B
CMSTC4011P	4011B
CN2484	128
CNY17	3040
CNY18	3040
CO2	5072A
CO49	116
CO6435	289
COD1531	116
COD1532	116
COD1533	116
COD1534	116
COD1535	116
COD1536	116
COD1537	125
COD1538	125
COD1551	116
COD1552	116
COD1553	116
COD1554	116
COD1555	116
COD1556	116
COD1611	116
COD1612	116
COD1613	116
COD1614	116
COD1615	116
COD1616	116
COD1617	125
COD1618	125
COD16047	116
CODI537	125
CODI538	125
CODI617	125
CODI1531	116
CODI6045	116
CODI6047	116
CODI11556	116
CODI15524	116
CODI15534	116
CODI15544	116
CODI15564	116
CP102	125
CP102BA	116
CP102DA	116
CP102FA	116
CP102HA	116
CP102KA	116
CP102MA	116
CP102PA	125
CP102RA	125
CP102VA	125
CP103	125
CP152VA	125
CP400	130
CP401	130
CP404	130
CP405	130
CP406	130
CP407	130
CP408	130
CP409	128
CP800	158
CP801	158
CP802	158
CP803	158
CP2357	128
CP3212055	139A
CPS15553-101	9932
CPS-16676-1	9951
CQ01C	5543
CQ01D	5544
CQ01E	5545
CQ01F	5546
CQ01G	5547
CQ1	102A
CQO1C	5543
CQO1D	5544
CQO1E	5545
CQO1F	5546
CQO1G	5547
CQT940A	121
CQT940B	121
CQT940BA	121
CQT1075	121
CQT1076	121
CQT1077	121
CQT1110	121
CQT1110A	121
CQT1111	121
CQT1111A	121
CQT1112	121
CQT1129	121
CR0000	109
CR01C	5524
CR01D	5526
CR01E	5527
CR02A-1(GAK)	5401
CR02A-2(GAK)	5402
CR02A-4(GAK)	5404
CR02A-8(GAK)	5405

To Be Replaced	ECG Replacement
CR02AM-1	5401
CR02AM1	5401
CR02AM-1	5401
CR02AM-1(GAK)	5401
CR02AM-2	5402
CR02AM-2(GAK)	5402
CR02AM-4	5404
CR02AM-4(GAK)	5404
CR02AM-6	5405
CR02AM-6(GAK)	5405
CR02AM-8	5405
CR02AM-8(GAK)	5405
CR02AM-10	5406
CR02C	5517
CR02D	5518
CR02E	5518
CR05A-1	5401
CR05A-2	5402
CR05A-4	5404
CR05A-6	5405
CR05A-8	5405
CR05A-10	5406
CR05A-12	5406
CR2AM-1	5453
CR2AM-2	5454
CR2AM-4	5455
CR2AM-6	5456
CR2AM-8	5457
CR4U01FY	5482
CR4U02FY	5483
CR4U03FY	5484
CR4U04FY	5485
CR4U05FY	5486
CR4U06FY	5487
CR4UX5FY	5481
CR10C-2	5522
CR10C-4	5524
CR10C-6	5526
CR10C-8	5527
CR10C-10	5528
CR10C-12	5529
CR10C-14	5530
CR10C-16	5531
CR12M01FY	5522
CR12M02FY	5524
CR12M03FY	5526
CR12M04FY	5527
CR12M05FY	5528
CR12M06FY	5529
CR12M07FY	5530
CR12M08FY	5531
CR12MX5FY	5521
CR12U01FY	5522
CR12U02FY	5524
CR12U03FY	5526
CR12U04FY	5527
CR12U05FY	5528
CR12U06FY	5529
CR12U07CY	5530
CR12U08FY	5531
CR12UX5FY	5521
CR20F-2	5542
CR20F-4	5543
CR20F-6	5544
CR20F-8	5545
CR20F-10	5546
CR20F-12	5547
CR20M01FY	5542
CR20M01FY-1	5542
CR20M02FY	5543
CR20M02FY-1	5543
CR20M03FY	5544
CR20M03FY-1	5544
CR20M04FY	5545
CR20M04FY-1	5545
CR20M05FY	5546
CR20M05FY-1	5546
CR20M06FY	5547
CR20M06FY-1	5547
CR20MX5FY	5541
CR20MX5FY-1	5541
CR20U01FY	5542
CR20U01FY-1	5542
CR20U02FY	5543
CR20U02FY-1	5543
CR20U03FY	5544
CR20U03FY-1	5544
CR20U04FY	5545
CR20U04FY-1	5545
CR20U05FY	5546
CR20U05FY-1	5546
CR20U06FY	5547
CR20U06FY-1	5547
CR20UX5FY	5541
CR20UX5FY-1	5541
CR24M01FY	5542
CR24M01FY-1	5542
CR24M02FY	5543
CR24M02FY-1	5543
CR24M03FY	5544
CR24M03FY-1	5544
CR24M04FY	5545
CR24M04FY-1	5545
CR24M05FY	5546
CR24M05FY-1	5546
CR24M06FY	5547
CR24M06FY-1	5547
CR24MX5FY	5541
CR24MX5FY-1	5541
CR24U01FY	5542
CR24U01FY-1	5542
CR24U02FY	5543
CR24U02FY-1	5543
CR24U03FY	5544
CR24U03FY-1	5544

To Be Replaced	ECG Replacement
CR24U04FY	5545
CR24U04FY-1	5545
CR24U05FY	5546
CR24U05FY-1	5546
CR24U06FY	5547
CR24U06FY-1	5547
CR24UX5FY	5541
CR24UX5FY-1	5541
CR101/6515	109
CR102/6515	109
CR501/6515	116(2)
CR1034	116
CR1035	116
CR32077-1	358
CR32077R	358
CR/E	116
CRO1C	5524
CRO1D	5526
CRO1E	5527
CRO2AM-1	5401
CRO2AM1	5401
CRO2C	5517
CRO2D	5518
CRO2E	5518
CRT1544	121
CRT1545	121
CRT1552	121
CRT1553	121
CRT1602	121
CRT3602A	121
CS3-02do2	5463
CS3-04do2	5465
CS8-02N	5491
CS8-05N	5491
CS8-1N	5491
CS8-2N	5492
CS8-3N	5494
CS8-4N	5494
CS8-6N	5496
CS10-02N	5491
CS10-05N	5491
CS10-1N	5491
CS10-2N	5492
CS10-4N	5494
CS10-6N	5496
CS16E	116
CS20-02R	5520
CS20-05N	5521
CS20-05R	5521
CS20-1N	5522
CS20-1R	5522
CS20-1.5R	5523
CS20-2N	5524
CS20-2R	5524
CS20-2.5R	5525
CS20-3R	5526
CS20-4N	5527
CS20-4R	5527
CS20-5R	5528
CS20-6N	5529
CS20-6R	5529
CS25-02N	5520
CS25-02R	5520
CS25-05N	5521
CS25-05R	5521
CS25-1N	5522
CS25-1R	5522
CS25-2N	5524
CS25-2R	5524
CS25-3R	5526
CS25-4N	5527
CS25-4R	5527
CS25-6N	5529
CS25-6R	5529
CS25-7R	5530
CS25-8N	5531
CS25-8R	5531
CS35-02N	5540
CS35-02R	5540
CS35-05N	5541
CS35-05R	5541
CS35-1N	5542
CS35-1R	5542
CS35-1.5R	5543
CS35-2N	5543
CS35-2R	5543
CS35-2.5R	5544
CS35-4N	5545
CS35-4R	5545
CS35-6N	5547
CS35-6R	5547
CS93-1007	175
CS131A	6354
CS131AZ	6354
CS131B	6354
CS131C	6354
CS131D(Axial)	116
CS131D(Stud)	6354
CS131E	6356
CS131F	6356
CS131Z	6354
CS183E	123
CS184E	123
CS184J	108
CS360	123A
CS429J	108
CS430H	108
CS-460B	123A
CS-461B	108
CS461F	108
CS469F	108
CS696	123A
CS697	123A
CS706	123A
CS718	123A

To Be Replaced	ECG Replacement
CS718A	123A
CS720A	123A
CS901ZHF	159
CS918	108
CS925M	123A
CS929	161
CS930	161
CS956	128
CS1014	108
CS1014D	108
CS1014E	108
CS1014F	108
CS1014G	161
CS1014H	161
CS1018	108
CS1120C	161
CS1120D	161
CS1120E	161
CS1120F	161
CS1120H	161
CS1121G	159
CS1124G	106
CS1129E	128
CS1166	123A
CS1166D	123A
CS1166E	123A
CS1166F	123A
CS1166G	123A
CS1166H	123A
CS1166H/F	123A
CS1168E	108
CS1168F	123A
CS1168G	123A
CS1168H	123A
CS1170F	159
CS1221F	159
CS1225D	108
CS1225E	108
CS1225F	108
CS1225H	128
CS1225HF	128
CS1226	108
CS1226E	108
CS1226F	108
CS1226G	108
CS1226H	108
CS1227	108
CS1227D	108
CS1227E	108
CS1227F	108
CS1227G	108
CS1228	159
CS1228E	159
CS1229	123A
CS1229A	123A
CS1229B	123A
CS1229C	123A
CS1229D	123A
CS1229E	123A
CS1229F	123A
CS1229G	123A
CS1229H	123A
CS1229K	128
CS1235C	123A
CS1235E	123A
CS-1235F	123A
CS1235G	123A
CS1236D	123A
CS1236H	123A
CS1237	129
CS1238	108
CS1238F	123A
CS1238G	108
CS1238H	108
CS1238I	108
CS1238P	123A
CS1243E	108
CS1243H	108
CS1244H	108
CS1244J	108
CS1244X	108
CS1245F	123A
CS1245G	123A
CS1245H	123A
CS1245I	123A
CS1245T	123A
CS1248	128
CS1248I	128
CS1248T	128
CS1250E	123A
CS1250F	128
CS1251E	159
CS1251F	159
CS1252B	108
CS1252C	108
CS1255H	128
CS1255HF	193
CS1256H	129
CS1256HG	192
CS1257	123A
CS1258	123A
CS1259	123A
CS1283A	123A
CS1284B	161
CS1284F	161
CS1284G	161
CS1284H	161
CS1288	123A
CS1289	123A
CS1293	108
CS1294E	159
CS1294H	159
CS1295E	123A
CS1295G	123A
CS1295H	128

To Be Replaced	ECG Replacement
CS1298	159
CS1303	159
CS1305	128
CS1308	159
CS1312G	129
CS1330	161
CS1330A	108
CS1330B	108
CS1330C	108
CS1340D	108
CS1340E	108
CS1340F	108
CS1340G	108
CS1340H	108
CS1340I	123A
CS1344	123A
CS1345	123A
CS1347	154
CS1348	123A
CS1349	123A
CS1350	108
CS1351	108
CS1352	128
CS1353	123A
CS1354	159
CS1359	108
CS1360	108
CS1361E	108
CS1361F	108
CS1361G	123A
CS1362	123A
CS1363	123A
CS1368	123A
CS1368A	123A
CS1368B	123A
CS1368C	123A
CS1368D	123A
CS1369	129
CS1370	123A
CS1371	123A
CS1372	123A
CS1383	123A
CS-1386E	123A
CS1386H	108
CS1420	123A
CS1453E	123A
CS1453F	128
CS1453G	128
CS1460E	161
CS1460H	161
CS1461J	161
CS1461X	161
CS1462F	161
CS1462I	128
CS1463A	123A
CS1464H	128
CS1465H	129
CS1508G	108
CS1509E	108
CS1509F	108
CS1518E	108
CS1555	108
CS1585	123A
CS1585E/F	123A
CS1585G	123A
CS1585H	107
CS1589E	161
CS1589F	161
CS1589S	161
CS1591LE	128
CS1594E	161
CS1596E	161
CS1609F	128
CS1613	128
CS1625	123A
CS1627	159
CS1661	108
CS1664	128
CS1665	123A
CS1711	128
CS1758	158
CS1759	103A
CS1834	108
CS1893	128
CS1909B	293
CS1910B	294
CS1990	128
CS2001	123A
CS2001H	123A
CS2004	123A
CS-2004C	108
CS2004C	123A
CS2004D	123A
CS-2005B	159
CS-2005C	159
CS2006	123A
CS2006F	229
CS2006G	108
CS-2007G	108
CS-2007H	108
CS2008	108
CS-2008F	108
CS2008G	108
CS2008H	108
CS2008H552	108
CS2023	192
CS-2142	193
CS-2143	192
CS2218	123A
CS2219	123A
CS2221	123A
CS2222	123A
CS2369	123A
CS2481	123A
CS2484	128

To Be Replaced	ECG Replacement
CS2711	123A
CS2712	123A
CS2713	123A
CS2714	123A
CS2715	161
CS2716	161
CS2922	123A
CS2923	123A
CS2924	123A
CS2925	123A
CS-3001B	108
CS-3024	172A
CS3082	2023
CS3390	123A
CS3391	123A
CS3391A	123A
CS3392	123A
CS3393	123A
CS3394	123A
CS3395	123A
CS3396	123A
CS3397	123A
CS3398	123A
CS3402	123A
CS3403	123A
CS3404	123A
CS3405	123A
CS3414	123A
CS3415	123A
CS3416	123A
CS3417	123A
CS3605	123A
CS3606	123A
CS3607	123A
CS3662	161
CS3663	161
CS3702	159
CS3703	159
CS3704	128
CS3705	128
CS3706	128
CS3707	161
CS3708	161
CS3709	161
CS3710	161
CS3711	161
CS3843	123A
CS3844	123A
CS3845	123A
CS3854	123A
CS3854A	123A
CS3855	123A
CS3855A	123A
CS3859	123A
CS3859A	123A
CS3860	123A
CS3900	123A
CS3900A	123A
CS3901	123A
CS3903	123A
CS3904	123A
CS3906	159
CS4424	123A
CS4425	123A
CS5088	123A
CS5369	123A
CS5447	159
CS5448	159
CS5449	128
CS5450	128
CS5451	128
CS5995	703A
CS6168F	123A
CS6168G	128
CS-6168G	123A
CS-6168H	123A
CS-6225E	107
CS6225F	108
CS-6225G	123A
CS6226F	108
CS6227E	108
CS6227F	108
CS-6227G	108
CS6228F	159
CS-6228G	129
CS6229F	123A
CS6229G	123A
CS7228G	129
CS7229F	128
CS7229G	123A
CS8050	297
CS9001	108
CS9011	123A
CS-9011	123A
CS9011/3490	123A
CS9011D	123A
CS9011E	123A
CS9011F	123A
CS9011G	123A
CS-9011G	123A
CS9011G/3490	123A
CS9011H	123A
CS9011I	123A
CS-9011L	123A
CS9012	159
CS9012/3490	159
CS9012L	159
CS9012E-F	159
CS9012F	159
CS9012FC	159
CS9012FG	159
CS9012G	159
CS9012H	159
CS9012HE	159
CS9012HF	159

To Be Replaced	ECG Replacement
CS9012HF(Last IF)	233
CS9012HG	159
CS9012HG/3490	159
CS9012HH	159
CS9012HH/3490	159
CS9012I	159
CS9013	123A
CS9013/3490	123A
CS9013A	123A
CS9013B	123A
CS9013C	123A
CS9013D	123A
CS9013E	123A
CS9013F	123A
CS9013G	123A
CS9013H	123A
CS9013HE	123A
CS9013HF	123A
CS9013HG	123A
CS9013HG/3490	123A
CS9013HH	123A
CS-9014	161
CS9014	123A
CS-9014	123A
CS9014/3490	123A
CS9014A	123A
CS9014B	123A
CS-9014B	123A
CS9014C	123A
CS9014C/3490	123A
CS9014D	123A
CS-9014D	123A
CS9014G	123A
CS9015	159
CS9015B	159
CS9015C	159
CS9015C2	159
CS9015D	159
CS-9015D	159
CS-9016	108
CS9016	229
CS-9016	229
CS9016/3490	229
CS-9016D	229
CS9016D	229
CS9016E	229
CS9016EF	229
CS9016F	229
CS-9016F	229
CS9016FG	229
CS9016G	229
CS9016G/3490	229
CS9016H	229
CS9017F	161
CS9017G	161
CS9017H	161
CS9018	108
CS-9018	108
CS9018/3490	108
CS9018D	108
CS9018E	108
CS-9018E	108
CS9018EF	108
CS9018F	108
CS-9018F	108
CS9018F/3490	108
CS9018FG	108
CS9018G	108
CS-9018G	108
CS-9018H	108
CS9020E	159
CS9020F	159
CS9021G-I	108
CS9021HF	129
CS9021HF(Last IF)	233
CS9021HG(Last IF)	233
CS9022LE	128
CS9101B	123A
CS9102	159
CS9102B	129
CS9103B	128
CS9103C	128
CS-9104	123A
CS9124B1	108
CS9124-C2	108
CS9125B	123A
CS-9125B	123A
CS9125-B1	108
CS9126	123A
CS9128-B2	159
CS9128C1	159
CS9129	159
CS9129B	159
CS9129B1	159
CS9129B2	159
CS9417	192
CS9600-4	123A
CS9600-5	123A
CS13401	123A
CS90111	123A
CST1739	104
CST1740	104
CST1741	104
CST1742	104
CST1743	121
CST1744	121
CST1745	121
CST1746	121
CSZ24	5081A
CT02C	5492
CT02D	5494
CT02E	5494
CT03C	5514
CT03D	5515
CT03E	5515

To Be Replaced	ECG Replacement
CT04C	5483
CT04D	5484
CT04E	5485
CT04F	5486
CT06B	5462
CT06C	5463
CT06D	5465
CT06E	5465
CT11-1A	5640
CT11-2A	5641
CT11-4A	5642
CT12-1A	5640
CT12-2A	5641
CT12-4A	5642
CT12C	5463
CT12E	5465
CT16XT	113
CT30-1A	5650
CT30-2A	5651
CT30-4A	5652
CT31-1A	5640
CT31-2A	5641
CT31-4A	5642
CT32-05N	5673
CT32-1A	5640
CT32-1N	5673
CT32-2A	5641
CT32-2N	5673
CT32-4A	5642
CT32-4N	5675
CT32-6A	5643
CT32-6N	5677
CT33-1A	5650
CT33-2A	5651
CT33-4A	5652
CT62-05N	5673
CT62-1N	5673
CT62-2N	5673
CT62-4N	5675
CT62-5N	5676
CT62-6N	5677
CT82-2N	5673
CT82-4N	5675
CT82-6N	5677
CT100	116
CT102-05N	5673
CT102-1N	5673
CT102-2N	5673
CT102-4N	5675
CT102-5N	5676
CT152-05N	5673
CT152-1N	5673
CT152-2N	5673
CT152-4N	5675
CT152-5N	5676
CT200	116
CT300	116
CT302-2N	5693
CT302-4N	5695
CT302-6N	5697
CT401-2N	5693
CT401-4N	5695
CT401-6N	5697
CT402-2N	5693
CT461	109
CT600	116
CT1009	102A
CT1012	107
CT1013	107
CT1017	158
CT1122	121
CT1124	121
CT1124A	121
CT1124B	121
CT1300	108
CT1500	108
CT2002	109
CT2005	110
CT2007	109
CT2008	110
CT3003	116
CT3005	116
CT3005(Ratio Det.)	110
CT6776	154
CTC-TX50	318
CTC-TX100	317
CTCZ17B	5132A
CTN200	116
CTO2C	5492
CTO2D	5494
CTO2E	5494
CTO3C	5514
CTO3D	5515
CTO3E	5515
CTO4C	5483
CTO4D	5484
CTO4E	5485
CTO4F	5486
CTO6B	5462
CTO6C	5463
CTO6D	5465
CTO6E	5465
CTP461	109
CTP573	109
CTP1032	102A
CTP1033	102A
CTP1034	102A
CTP1035	102A
CTP1036	102A
CTP1104	104
CTP1106	104
CTP1108	104
CTP1109	104
CTP1111	121
CTP1117	104

To Be Replaced	ECG Replacement
CTP1119	104
CTP1124	121
CTP1133	121
CTP1135	121
CTP1136	121
CTP1137	121
CTP1265	121
CTP1266	121
CTP1306	121
CTP1307	121
CTP1500	121
CTP1503	121
CTP1504	121
CTP1508	121
CTP1509	105
CTP1511	121
CTP1512	105
CTP1513	121
CTP1514	121
CTP1544	179
CTP1545	179
CTP1550	121
CTP1551	121
CTP1552	179
CTP1553	179
CTP1728	121
CTP1729	121
CTP1730	121
CTP1731	121
CTP1732	121
CTP1733	121
CTP1735	121
CTP1736	121
CTP1739	121
CTP-2001-1001	102A
CTP-2001-1002	102A
CTP-2001-1003	102A
CTP-2001-1004	102A
CTP-2001-1007	123A
CTP-2001-1008	123A
CTP-2001-1009	102A
CTP-2001-1010	109
CTP-2001-1011	116
CTP-2001-1012	116
CTP-2006-1001	102A
CTP-2006-1002	102A
CTP-2006-1003	102A
CTP-2006-1004	109
CTP2076-1001	102A
CTP2076-1002	102A
CTP2076-1003	102A
CTP2076-1004	102A
CTP2076-1005	102A
CTP2076-1006	102A
CTP2076-1007	102A
CTP2076-1008	102A
CTP2076-1009	102A
CTP2076-1010	102A
CTP2076-1011	102A
CTP2076-1012	102A
CTP3500	121
CTP3503	121
CTP3504	121
CTP3508	121
CTP3544	179
CTP3545	179
CTP3552	179
CTP3553	179
CTR-0001	123A
CTR-0002	199
CTR-0003	199
CTR-0004	123A
CTR-0005	152
CTR-0006	315
CTR-0007	235
CTR-0008	294
CTR-0009	177
CTR-0010	109
CTR-0011	139A
CTR-0012	601
CTR-0013	116
CTZC6.8B	5120A
CTZC7.5B	5121A
CTZC8.2B	5122A
CTZC9.1B	5124A
CTZC10B	5125A
CTZC11B	5126A
CTZC12B	5127A
CTZC13B	5128A
CTZC14B	5129A
CTZC15B	5130A
CTZC18B	5133A
CTZC19B	5134A
CTZC20B	5135A
CTZC22B	5136A
CTZC24B	5137A
CU01C	5483
CU01D	5484
CU01E	5485
CU01F	5486
CU06VC	230
CU06VD	230
CU06VE	230
CU06VF	230
CU06VG	230
CU12E	5455
CU-12E	5455
CV03B(KAG)	5402
CV03C(KAG)	5404
CV03D(KAG)	5405
CV03E(KAG)	5405
CV04B	5402
CV04C	5404
CV04D	5405
CV04E	5405

To Be Replaced	ECG Replacement
CV12B	5454
CV12C	5455
CV12D	5456
CV12E	5457
CV425	109
CV442	109
CV832	613
CV834	614
CV1620	610
CV1624	611
CV1626	612
CV1634	613
CV1638	614
CV5007	610
CV5010	611
CV5012	612
CV5022	613
CV5033	614
CW01B(GAK)	5402
CW01C(GAK)	5404
CX0036	109
CX0037	116
CX0039	116
CX0040	116
CX0041	109
CX0042	110
CX0047	116
CX0048	116
CX0049	116
CX0050	135A
CX0051	140A
CX-0055	177
CX064	1311
CX-064	1311
CX064(1)	1311
CX-064-2	1311
CX064-2	1311
CX065	1300
CX-065	1300
CX065A	1300
CX-065A	1300
CX-075	1301
CX075	1301
CX075B	1301
CX-075B	1301
CX075B	1301
CX-089	1096
CX089D	1096
CX-093	712
CX093	712
CX093D	712
CX095	1308
CX095A	1308
CX095C	1308
CX157	1312
CX-157	1312
CX158	1313
CX-158	1313
CX161A	1309
CX162	1310
CX164A	1302
CX-164A	1302
CX170	1303
CX172	1304
CX173	1305
CX-173	1305
CX177	1306
CX-177	1306
CX181	1307
CX-181	1307
CX9000	358
CX9001	116
CXA495D	129
CY40	116
CY50	116
CY80	156
CY100	125
CZ060	5070A
CZ062	137A
CZ072	5015A
CZ-072	5015A
CZ-092	139A
CZ-092	139A
CZ092	139A
CZ094	139A
CZ-094	139A
CZ6.8B	5071A
CZ7.5B	138A
CZ8.2B	5072A
CZ9.1B	139A
CZ10B	140A
CZ11B	5074A
CZ12B	142A
CZ13B	143A
CZ14B	144A
CZ15B	145A
CZ16B	5075A
CZ17B	5076A
CZ18B	5077A
CZ19B	5078A
CZ20B	5079A
CZ22B	5080A
CZ24B	5081A
CZ25B	5082A
CZ27B	146A
CZ30B	5084A
CZ33B	147A
CZ-92	139A
CZ142	144A
CZ-142	144A
CZAJ-102	116
CZD010	140A
CZD010-5	140A
CZD012-5	142A
CZD014	144A

To Be Replaced	ECG Replacement
CZD014-5	144A
CZD015	145A
CZD015-5	145A
D000136	156
D000149	116
D000152	116
D000165	125
D004	116
D006	107
D008	102A
D009	229
D-00169C	109
D-00184R	177
D-00204R	109
D-00269C	109
D-00369C	138A
D-00384R	116
D-00469C	137A
D-00484R	142A
D-00569C	139A
D-00669C	109
D00D	192
D01-100	116
D-05	116
D010	110
D018	102A
D018(DIODE)	177
D019	100
D020	126
D021	102A
D024	5072A
D026	126
D028	116
D029	614
D030	102A
D030(DIODE)	116
D031	102A
D031(Chan.Master)	123A
D032	109
D038	102A
D043	102A
D048	123A
D053	123A
D057	199
D058	108
D059	102A
D063	160
D069	108
D072	229
D073	160
D078	100
D079	160
D080	127
D081	127
D083	103A
D085	103A
D086	160
D087	108
D088	108
D093	109
D0123WX	5652
D0250	175
D010045	109
D010090	519
D090052	519
D090120	116
D1-2	109
D1-7	116
D1-8	139A
D1-13	147A
D1-20	177
D1-52S	116
D1A	123A
D1A(Zener)	5072A
D1B	113
D1C	113
D1D	125
D1E	116
D1F	506
D1F(Zener)	149A
D1G	139A
D1H	116
D1J	116
D1K	125
D1L	116
D1M	136A
D1R35	109,110
D1R38	123A
D1R39	109,110
D1S	143A
D1T	144A
D1U	5072A
D1W	146A
D1Y	107
D1ZBLU	145A
D1ZRED	144A
D1ZVIO	143A
D1ZYEL	145A
D-1.5-01	116
D-2	109
D2-1	116
D2-77-1	177
D2E	147A
D2G	141A
D2G-1	141A
D2G-2	141A
D2G-3	142A
D2G-4	142A
D2H	183
D2H(Diode)	116
D2J	116
D2M	502
D2N	503
D2R31	109
D2R38	123A

To Be Replaced	ECG Replacement
D2X4	116
D2Y	505
D2Z	139A
D2Z-2	146A
D3A	507
D3F	139A
D3G	178MP
D3H	137A
D3N	141A
D3R	116
D3R38	116
D3R39	116
D3U	116
D3V	116
D3W	142A
D3Y	137A
D3Z	116
D4	113
D4C28	161
D4C29	161
D4C30	161
D4C31	161
D4D20	161
D4D21	161
D4D22	161
D4D25	123A
D4D26	123A
D4G	502
D4H	147A
D4J	147A
D4L	125
D4M	116
D4N	141A
D4P	144A
D4R	109
D4R26	116
D4R39	116
D4S16	312
D5	114
D5B	145A
D5E37	6401
D5E-37	6401
D5E43	6409
D5E-43	6409
D5E44	6401
D5E-44	6401
D5E45	6409
D5E-45	6409
D5G	116
D5H	506
D5R35	116
D5R39	116
D5V	177
D5W	137A
D6	115
D6C	513
D6HZ	116
D6M	5072A
D6U	5080A
D6.2	137A
D7	115
D7A30	128
D7A31	128
D7A32	128
D7E	177
D7L	5076A
D7N	614
D7S	5072A
D7Z	177
D8G	506
D8HZ	125
D8L	506
D8M	506
D8P	143A
D8U	5073A
D9M	5073A
D9R1	139A
D10B1051	107
D10B1055	107
D10G1051	107
D10G1052	107
D11	103
D11C1B1	128
D11C3B1	128
D11C5B1	128
D11C7B1	128
D11C10B1	128
D11C11B1	128
D11C201B20	124
D11C203B20	124
D11C205B20	124
D11C207B20	124
D11C210B20	124
D11C211B20	124
D-12	177
D12	130
D13	105
D13K1	6402
D13T1	6402
D14	106
D15	130
D15A	116
D15C	116
D16	130
D16E7	123A
D16E9	123A
D16EC18	123A
D16G6	107
D16K1	107
D16K2	107
D16K3	107
D16K4	107
D16P2	172A
D16U3	113
D16U4	113

To Be Replaced	ECG Replacement
D17	144A
D18	116
D-18	139A
D18A12	184
D19	103
D20	103
D21	103
D22	103
D23	103
D24	124
D24A3394	108
D24B	124
D24C	124
D24CK	124
D24D	124
D24E	124
D24F	124
D24K	124
D24KC	124
D24KD	124
D24KE	124
D24Y	124
D24YB	124
D24YD	124
D24YE	124
D24YF	124
D24YK	124
D24YLC	124
D24YLD	124
D24YS	124
D25	116
D25A	116
D25B	116
D25C	116
D26A	130
D26B	130
D26B1	107
D26B2	107
D26C	130
D26C1	107
D26C2	107
D26C3	107
D26E2	107
D26G1	107
D27C1	152
D27C2	152
D27C3	152
D27C4	152
D28	116
D28A1	152
D28A2	152
D28A3	152
D28A4	152
D28A5	152
D28A6	152
D28A7	152
D28A9	152
D28A10	152
D28A12	152
D28A13	152
D28B	171
D28D1	152
D28D2	152
D28D3	152
D28D4	152
D28D5	152
D28D7	152
D28D10	152
D29	175
D29A4	159
D29A5	159
D29A6	159
D29A9	159
D29E1	159
D29E1J1	193
D29E2	159
D29E2J1	193
D29E4	159
D29E4J1	193
D29E5	159
D29E5J1	193
D29E6	159
D29E6J1	193
D29E7	159
D29E7J1	193
D29E8	159
D29E9	193
D29E9J1	193
D29E10	193
D29E10J1	193
D30	6408
D30-0	103A
D30A1	159
D30A2	159
D30A3	159
D30A4	159
D30A5	159
D30(Diac)	6408
D30(Diode)	116
D30G	103A
D30H	103
D30-N	103A
D30(Transistor)	103A
D31	103A
D31D	103A
D32(Diac)	6408
D32(Transistor)	103A
D33	103A
D33C	103A
D33D21	123A
D33D21J1	192A
D33D22	123A
D33D22J1	192A
D33D24	123A
D33D24J1	192A

To Be Replaced	ECG Replacement
D33D25	123A
D33D25J1	192A
D33D26	123A
D33D26J1	192A
D33D27	123A
D33D27J1	192A
D33D28	123A
D33D29	192A
D33D29J1	192A
D33D30	192A
D33D30J1	192A
D33D34J1	192A
D34	103A
D35	103A
D36	101
D37	103A
D37A	103A
D37B	103A
D37C	103A
D38	103A
D40C1	265
D40C2	266
D40C3	267
D40C4	265
D40C5	266
D40C7	265
D40C8	266
D40D1	210
D40D2	210
D40D3	210
D40D4	210
D40D5	210
D40D7	210
D40D8	210
D40D10	210
D40D11	210
D40K1	268
D40K2	268
D40N1	171
D40N3	171
D40N5	171
D41	130
D41D1	211
D41D2	211
D41D4	211
D41D5	211
D41D7	211
D41D8	211
D41D10	211
D41D11	211
D41K1	269
D41K2	269
D42C1	186
D42C2	186
D42C3	186
D42C4	186
D42C5	186
D42C6	186
D42C7	186
D42C8	186
D43	101
D43A	101
D43C1	187
D43C2	187
D43C3	187
D43C4	187
D43C5	187
D43C6	187
D43C7	153
D43C8	187
D44	101
D44C1	186A
D44C2	152
D44C3	152
D44C4	152
D44C5	152
D44C6	152
D44C7	152
D44C8	152
D44C8B	152
D44C9	152
D44C88	186
D44CBB	152
D44E1	263
D44E2	263
D44E3	263
D44H11	377
D44R1	198
D44R2	198
D44R3	198
D44R4	198
D45	162
D45C	116
D45C1	153
D45C2	153
D45C3	153
D45C4	153
D45C5	153
D45C6	153
D45C7	153
D45C8	153
D45C9	153
D45CZ	116
D45E1	264
D45E2	264
D45E3	264
D45H11	378
D46	162
D47	328
D48	116
D49	175
D50	116
D51	113
D51A	328
D53	130

To Be Replaced	ECG Replacement
D55	181
D55A	181
D56	175
D56W1	165
D56W2	165
D57	175
D58	175
D59	162
D60	162
D61	103A
D62	103A
D63	103A
D64	103A
D65	126
D65-1	103A
D65C	116
D66	126
D67	162
D67B	162
D67C	162
D67D	162
D67E	162
D68	116
D68B	223
D68C	223
D68D	223
D68E	223
D69	130
D70	175
D71	175
D71L	289
D72	103A
D72-2C	103A
D72-3C	103A
D72-4C	103A
D72A	103A
D72B	103A
D72C	103A
D72RE	103A
D73	280
D73A	280
D73B	280
D73B	280
D73C	280
D73D	280
D73E	280
D74	280
D74A	280
D74B	280
D74C	280
D74D	280
D74E	280
D75	103A
D75A	103A
D75AH	103A
D75B	103A
D75C	103A
D75H	103A
D77A	103A
D77AH	103A
D77B	103A
D77C	103A
D77D	103A
D77(Diode)	177
D77H	103A
D77P	103A
D77(Transistor)	103A
D78	282
D78A	282
D78B	282
D78C	282
D78D	282
D79	225
D79A	225
D79B	225
D79C	225
D79D	225
D80	130
D81	130
D82	130
D82A	130
D83	162
D84	162
D85C	125
D88	125
D88A	162
D90	152
D91	152
D91F	152
D92	175
D92D	175
D94	124
D96	103A
D100	116
D100A	103A
D101	101
D101B	102A
D102	175
D102-0	175
D102-R	175
D102-Y	175
D103	175
D103-0	175
D103-R	175
D103-Y	175
D104	103A
D105	103A
D105B	102A
D105C	125
D108	125
D110	162
D110-0	162
D110-R	162
D110-Y	162
D111	162

To Be Replaced	ECG Replacement
D111-0	162
D111-R	162
D111-Y	162
D113	181
D113-0	181
D113-R	181
D113-Y	181
D114	181
D114-0	181
D114-R	181
D114-Y	181
D116	226MP
D117	158
D118	280
D118BL	280
D118R	280
D118Y	280
D119	280
D119BL	280
D119R	280
D119Y	280
D120	282
D120A	282
D120B	282
D120C	282
D120H	282
D120HA	282
D120HB	282
D120HC	282
D121	282
D121A	282
D121B	282
D121H	282
D121HA	282
D121HB	282
D124A	280
D124AH	280
D124AHA	280
D124B	280
D124(Rect.)	116(4)
D124(Transistor)	280
D125	280
D125A	280
D125AH	280
D125AHA	280
D125AHB	280
D126	280
D126A	280
D126AH	280
D126AHA	280
D126AHB	280
D126H	280
D126HA	280
D126HB	280
D127	103A
D127A	103A
D128	103A
D128A	103A
D129	175
D129-BL	175
D129-R	175
D129-Y	175
D130	175
D130BL	175
D130-R	175
D130-Y	175
D132	181
D133(Chan.Master)	108
D134	126
D134(Chan. Master)	102A
D135	102A
D136	124
D137	124
D141	152
D141(Chan.Master)	108
D141H01	152
D141H9Z	152
D142	175
D142M	175
D142(M)	175
D143	175
D144	175
D144S	116
D145	175
D146	130
D146UK	130
D147	130
D149	160
D150	175
D151	130
D152	164
D152(Chan.Master)	195A
D152(RF Pwr)	195A
D154	152
D155	175
D155H	175
D155K	175
D155L	175
D156	158
D157	124
D157B	124
D158	124
D159	124
D160	107
D161	101
D162	101
D163	130
D164	130
D165	162
D166	162
D167	101
D170	103A
D170A	103A
D170AA	103A
D170AB	103A

To Be Replaced	ECG Replacement
D170AC	103A
D170B	103A
D170BC	103A
D170C	103A
D170PB	103A
D171	283
D172	160
D172-F	506
D173	160
D174	160
D175	130
D175B	130
D176	139A
D177	162
D178	103A
D178A	103A
D178Q	103A
D178T	103A
D180	223
D180A	223
D180B	223
D180C	223
D180D	223
D180K	219
D180L	223
D180M	223
D180N	219
D181	162
D182	128
D183	128
D184	152
D186	103A
D186A	103A
D186B	103A
D187	103A
D187A	103A
D187R	103A
D187Y	103A
D188	130
D188A	130
D188B	130
D188C	130
D188M	130
D189	162
D189A	162
D190	124
D191	103A
D192	103A
D193	102A
D194	103A
D195	101
D195A	101
D198	162
D198AP	162
D198AQ	162
D198AR	162
D198H	162
D198HQ	162
D198HR	162
D198P	162
D198Q	162
D198R	162
D198S	162
D198V	162
D199	162
D200	116
D200A	165
D201	130
D201(0)	130
D201M	130
D201M0	130
D201M-0	130
D201M-Y	130
D201MV	130
D201MY	130
D201Q	130
D201Y	130
D202	162
D203	162
D204	128
D204L	128
D205	225
D211	130
D211-0	130
D211M	130
D211-O	130
D211Y	130
D212	130
D213	284
D214	284
D215	103
D-215-1	519
D217	162
D218	284
D219	128
D220	116
D220-1M	515
D220-1N	515
D220M	116
D221	128
D223	224
D226	175
D226-0	175
D226A	175
D226AP	175
D226B	175
D226BP	175
D226P	175
D226Q	175
D227	123A
D227A	123A
D227B	123A
D227C	123A
D227D	123A
D227(Diode)	116

To Be Replaced	ECG Replacement
D227E	123A
D227F	123A
D227L	123A
D227(MP)	123A
D227R	123A
D227S	123A
D227V	123A
D227W	123A
D228	192A
D231	283
D232	199
D233	128
D234	152
D234-0	152
D234-0	152
D234-R	152
D234R	152
D234-Y	152
D235	152
D235-0	152
D235D	152
D235G	152
D235GR	152
D235LB	152
D235LBY	152
D235-O	152
D235-R	152
D235R	152
D235T	152
D235-Y	152
D235Y	235
D236(Rect.)	166
D236(Transistor)	175
D238	175
D238F	175
D241H	130
D246	165
D249	181
D251	286
D254	175
D255	175
D257	175
D-258	124
D261	192A
D261A	192A
D261B	192A
D261C	192A
D261D	192A
D261E	192A
D261F	192A
D261L	192A
D261P	192A
D261R	192A
D261V	192A
D261W	192A
D283	162
D284	162
D285	162
D286	109
D286D	198
D287	284
D287A	284
D287B	284
D287C	284
D288	152
D288A	152
D288B	152
D288C	152
D288K	152
D288L	152
D289	152
D289A	152
D289B	152
D289C	152
D290	175
D290L	175
D291	175
D291A	175
D292	175
D292(Chan.Master)	107
D294	123A
D297	175
D299	238
D299SL	238
D299V	238
D300	116
D300B	165
D308	199
D312	164
D313C	196
D313D	196
D313E	196
D313F	196
D313(Transistor)	196
D313(Zener)	135A
D315	175
D315D	175
D315F	175
D316	284
D317	152
D317A	152
D317F	152
D317P	152
D318	152
D318A	152
D319	181
D320	162
D320(Diode)	173BP
D320F	173BP
D321	283
D322	280
D322A	280
D322B	280
D322C	280
D323	280

To Be Replaced	ECG Replacement
D323A	280
D323B	280
D323C	280
D324	124
D325	152
D325C	152
D325D	152
D325E	152
D325E1	186
D325(E2)	186
D325EZ	152
D325F	152
D327	123A
D327A	123A
D327B	123A
D327C	123A
D327D	123A
D327E	123A
D327F	123A
D327V	123A
D327Y	123A
D328	123A
D328S	210
D330	152
D330D	152
D330E	152
D330F	152
D334	162
D334A	162
D334R	162
D336	192
D336R	192
D336Y	192
D340	280
D341	180
D341H	180
D342	123A
D343	152
D350Q	238
D351	283
D352	158
D352D	103A
D352E	103A
D352F	103A
D352S	103A
D353	177
D355C	297
D355D	297
D355E	297
D356	291
D356C	291
D356D	291
D356E	291
D357	291
D357C	291
D357D	291
D358	291
D358C	291
D358D	291
D358E	291
D359	152
D359C	152
D359C2	152
D359D	152
D359D1	152
D359D2	152
D359E	152
D360	152
D360C	152
D360D	152
D360E	152
D365A	152
D365B	152
D365H	152
D365P	152
D366-O	152
D366P	152
D366Q	152
D367	103A
D367A	103A
D367B	103A
D367C	103A
D367D	103A
D367E	103A
D367F	103A
D367P	103A
D368	1047
D369	1081A*
D370	280
D371	181
D372BL	123A
D375	328
D376	283
D376A	283
D379	284
D379P	284
D379Q	284
D379R	284
D379S	284
D380	165
D381	291
D381L	291
D381M	291
D382	152
D382LM	152
D383	283
D386A	375
D386AC	375
D386AD	375
D386AE	375
D386AY	375
D386D	375
D386E	375
D386Y	375
D386Y-D	375

To Be Replaced	ECG Replacement
D386Y-E	375
D387AD	375
D387AE	198
D387AF	198
D387AS	375
D387D	375
D387E	375
D387F	375
D388	280
D389	152
D389A	152
D389AF	152
D389AF0	152
D389AF-0	152
D389AF-P	152
D389AFO	138A
D389AFP	152
D389AO	152
D389AP	152
D389B	152
D389BL	152
D389BLB	152
D389BLB-0	152
D389BLB-O	152
D389BLB-OP	152
D389BLB-P	152
D389BP	152
D389BQ	152
D389LB	152
D389LBQ	152
D389-O	152
D389-OP	152
D389Q	152
D400D	293
D400E	293
D400F	293
D400P1	293
D400P1D	293
D400P1E	293
D400P1F	293
D400(Rect.)	116
D400(Transistor)	293
D401	291
D401A	291
D401AK	291
D401AL	291
D401EK	291
D401EX	291
D401H	291
D401I	291
D401K	291
D401L	291
D401LA	291
D401M	291
D402	375
D402A	375
D402AK	198
D402AL	198
D402AM	198
D418	165
D423	384
D424	284
D424-0	284
D424-R	284
D425	280
D425O	280
D426	280
D426O	280
D426R	280
D427	280
D427O	280
D427R	280
D428	130
D431-F	506
D438D	293
D438E	293
D458	163A
D461	283
D467	297
D467A	297
D467AC	297
D467B	297
D467C	297
D467-C	297
D467D	297
D468	297
D468A	287
D468B	287
D468C	287
D468D	287
D470	321
D470A	321
D471	293
D471K	293
D471L	293
D471M	293
D476A	196
D476B	196
D476C	196
D476YL	196
D477	152
D478	291
D478B	291
D478C	291
D478WT	291
D478Y	291
D478YL	291
D500	116
D513	152
D517	165
D525	196
D525-0	152
D525-O	196
D525R	196
D525Y	152

To Be Replaced	ECG Replacement
D526	196
D526-0	196
D526Y	196
D533	283
D541	306
D545	128
D545E	128
D545F	128
D546	175
D562	108
D564L	193
D564M	193
D570	196
D571	306
D571K	306
D575	165
D575L	165
D577	165
D582	284
D582A	284
D588	380
D591	199
D591R	199
D591S	199
D599	199
D599E	199
D600	116
D604	162
D610	286
D611	284
D612	186A
D612K	186A
D618	130
D625	228
D632P	162
D632Q	162
D632R	162
D636	123A
D636-0	123A
D636P	123A
D636Q	123A
D636R	123A
D637	194
D637P	194
D637Q	194
D637R	194
D637S	194
D637T	194
D639	128
D639P	128
D639Q	128
D639R	128
D649	165
D656	175
D666	382
D666A	382
D666C	194
D667	382
D667A	382
D668	373
D668A	373
D669	373
D669A	373
D692	247
D692P	247
D692Q	247
D704	377
D704D	377
D704E	377
D704F	377
D720D	103A
D720E	103A
D800	125
D818	173BP
D857C(IC)	1199
D857(IC)	1199
D858	1198
D858C(IC)	1198
D858(IC)	1198
D861	1254
D861C	1254
D861CE	1254
D861E	1254
D912	123A
D975	112
D1000	125
D1020	1012
D1041	1013
D1101	133
D1102	133
D1110	1014
D1172S	116
D1180	456
D1201A	125
D1201B	125
D1201D	125
D1201F	116
D1201M	125
D1201N	125
D1201P	125
D1301	133
D1302	133
D1303	133
D1449	192
D1569K	198
D1666	108
D1720	610
D1724	611
D1726	612
D1734	613
D1738	614
D2101S	515
D2102S	515
D2103S	515

To Be Replaced	ECG Replacement
D2103SF	515
D2201A	515
D2201B	515
D2201D	515
D2201F	515
D2201M	515
D2201N	515
D2600EF	116
D2600F	515
D2600M	515
D2601DF	515
D2601E	515
D2601EF	515
D2601M	515
D3000	1015
D3001	1016
D3005VN	130
D3040	1017
D3061	1026
D3080	1018
D3110	1152
D3120	1019
D3141	1020
D3150	1021
D3202Y	6408
D3356	177
D3500	238
D3530	112
D3601	235
D3890	152
D4001(IC)	4001B
D4002(IC)	4002B
D4011(IC)	4011B
D4012(IC)	4012B
D4013(IC)	4013B
D4014(IC)	4014B
D4015(IC)	4015B
D4017(IC)	4017B
D4019(IC)	4019B
D4020(IC)	4020B
D4021(IC)	4021B
D4023(IC)	4023B
D4024(IC)	4024B
D4025(IC)	4025B
D4027(IC)	4027B
D4028(IC)	4028B
D4029(IC)	4029B
D4030(IC)	4030B
D4040(IC)	4040B
D4042(IC)	4042B
D4049(IC)	4049B
D4050(IC)	4050B
D4051(IC)	4051B
D4052(IC)	4052B
D4068(IC)	4068B
D4069(IC)	4069
D4071(IC)	4071B
D4078(IC)	4078B
D4081(IC)	4081B
D4099(IC)	4099B
D4512(IC)	4512B
D4518(IC)	4518B
D4520(IC)	4520B
D4522(IC)	4522B
D4539(IC)	4539B
D4555(IC)	4555B
D4556(IC)	4556B
D5403	HiDiv-1
D5404	HiDiv-2
D5880	1198
D6462	177
D6623	116
D6623A	116
D6624	116
D6624A	116
D6625	116
D6625A	116
D6726	177
D8410	109
D9634	199
D10167	116
D10168	116
D36647	1115A
D36667	1115
D-50492-01	159
D101167	116
D160092	139A
D160131	135A
D260015	614
D260028	614
D590015	601
D911138-1	128
D911138-2	128
D911138-3	128
D911138-4	128
D911138-5	128
D911138-6	128
D911138-7	128
D917254-2	123A
D919039-2	519
D919695	9900
D919698	9903
D919699	9904
D919700	9905
D921881-1	123A
D926640-1	123
D928121	123A
D4000411	909
D34002410-001	9914
D34003220-001	177
D34013890-002	74H04
D34014094	175
D-F1	101
D-F1A	102A
D-TEX-8	904

To Be Replaced	ECG Replacement
DA000	116
DA001	116
DA002	116
DA058	125
DA-087	135A
DA90	109
DA2068	125
DAAY001002	109
DAAY002001	116
DAAY003002	177
DAAY004001	177
DAAY010092	139A
DAC301	177
DANZ006000	109
DANZ0060000	109
DASZ158800	519
DAT1A	126
DAT2	126
DB3	6408
DB166-46-6501	159
DBAZ073304	294
DBBY001003	282
DBBY003001	186A
DBBY003002	186A
DBBY005001	235
DBCZ037300	199
DBCZ039404	229
DBCZ073304	199
DBCZ073503	289
DBCZ073504	289
DBCZ083905	123A
DBCZ083906	123A
DBCZ094504	199
DBCZ0373000	119
DBCZ101800	299
DBCZ136406	123A
DBCZ176003	306
DBCZ373000	199
DC6(Quasar)	513
DC-9	102A
DC-10	102A
DC-12	158
DC-13	109
DC-410	177
DC2687	612
DC2688	614
DC2689	614
DC4210B	610
DC8457	177
DCT310	614
DCT310(VARACTOR)	614
DD-000	116
DD-003	116
DD-006	116
DD-007	116
DD04	113
DD05	114
DD06	115
DD056	116
DD058	125
DD-79D107-1	130
DD121	401
DD175C	116
DD176C	116
DD177C	116
DD236	116
DD266	116
DD268	125
DD2066	116
DD2068	125
DD2320	116
DD2321	116
DDAY001001	109
DDAY001002	109
DDAY001003	109
DDAY001004	109
DDAY001010	109
DDAY001022	109
DDAY001023	109
DDAY002001	116
DDAY002002	116
DDAY004001	177
DDAY007001	601
DDAY008001	137A
DDAY008003	5072A
DDAY008021	5025A
DDAY009001	136A
DDAY009003	5075A
DDAY009007	5075A
DDAY010002	139A
DDAY010005	139A
DDAY010006	139A
DDAY010007	5015A
DDAY011001	116
DDAY030002	612
DDAY036001	116
DDAY042001	116(4)
DDAY047001	519
DDAY047005	519
DDAY048001	177
DDAY048007	519
DDAY048008	177
DDAY048009	519
DDAY048012	519
DDAY048013	519
DDAY048014	519
DDAY049001	116
DDAY067001	612
DDAY069001	519
DDAY087002	5067A
DDAY090001	610
DDAY103001	116
DDAY126001	139A
DDBY002001	116
DDBY003001	294

To Be Replaced	ECG Replacement
DDBY003002	294
DDBY003003	294
DDBY004001	290
DDBY007002	290
DDBY008001	129
DDBY011003	290
DDBY23001	235
DDBY23301	123A
DDBY104002	294
DDBY209003	123A
DDBY216002	229
DDBY219001	229
DDBY222002	123A
DDBY224001	199
DDBY224002	199
DDBY224003	199
DDBY224004	199
DDBY224006	199
DDBY227001	186A
DDBY227002	233
DDBY227004	186A
DDBY228001	152
DDBY230001	235
DDBY231002	236
DDBY233001	123A
DDBY246001	295
DDBY256001	295
DDBY256002	295
DDBY257001	235
DDBY259001	316
DDBY259002	229
DDBY261002	229
DDBY262001	199
DDBY269001	316
DDBY270001	123AP
DDBY272001	315
DDBY273001	289
DDBY277001	123A
DDBY277002	233
DDBY278001	152
DDBY278002	152
DDBY283001	289
DDBY287001	229
DDBY288001	295
DDBY289001	235
DDBY290001	152
DDBY295002	229
DDBY307001	236
DDBY403001	130
DDBY407001	196
DDBY407004	196
DDBY410001	293
DDBY410002	128
DDCY001001	312
DDCY001002	132
DDCY002002	132
DDCY006001	312
DDCY007002	290
DDCY009002	312
DDCY103001	220
DDCY104001	222
DDCY104002	222
DDCY104003	222
DDCY202002	312
DDCY202003	312
DDE-201	116
DDEY001001	973
DDEY002001	724
DDEY004001	1100
DDEY015001	74162
DDEY017001	1172
DDEY019001	974
DDEY020001	973
DDEY026001	975
DDEY027001	1081A*
DDEY028001	964
DDEY029001	7490
DDEY030001	7400
DDEY032001	1172
DDEY033000	74162
DDEY037001	1199
DDEY042001	977
DDEY046001	977
DDEY055001	1198
DDEY061001	1194
DDEY064001	1082
DDEY076001	1202
DDEY082001	1204
DDEY084001	4011B
DDEY 087001	1203
DDEY088001	977
DDEY089001	4011B
DDEY091001	1194
DDEY093001	977
DDEY097001	1195
DDEY123001	1170
DDEY131001	1271
DDFY004002	177
DDFY007001	177
DDFY017001	6402
DDMV-1	109
DDMV-2	109
DDRY020001	601
DE14	116
DE14A	116
DE16	116
DE16A	116
DE201	116
DE-3181	102
DEB162	601
DED4191	159
DEEY004001	1100
DER1	125
DF019	601
DF1	101

@, * — See special notes on inside back cover.

To Be Replaced	ECG Replacement
DF-2	130
DF45	219
DFFY007001	177
DG-1N	506
DG1N	506
DG1N60	109
DG-1NR	506
DG1NR	506
DG1PR	116
DG1S34	109
DG13	516
DG13TV	516
DG14	516
DG130	516
DGM-2	109
DGM-3	109
DH-001	116
DH-002	116
DH4R2	116
DH14	116
DH14A	116
DH16	116
DH16A	116
DHD800	177
DHD805	177
DHD805(Zener)	145A
DHD806	177
DHD8001	177
DI-1	109
DI-2	109
DI-3	177
DI-5	5002A
DI-7	116
DI-8 (Courier)	139A
DI-8(diode)	109
DI-42S	116
DI-46	116
DI-52S	116
DI-55	116
DI-56	116
DI-71	116
DI-72S	116
DI-172S	116
DI-645	116
DI-646	116
DI-647	116
DI-648	116
DI-649	116
DI-650	125
DI-705	116
DI-1649	116
DIA	5072A
DIB	113
DIC	113
DICR1	125
DID	125
DIE	116
DIJ	116
DIJ61224	109
DIJ70486	177
DIJ70488	116
DIJ70542	109
DIJ70543	110
DIJ70544	116
DIJ70545	177
DIJ70644	110
DIJ70645	109
DIJ70646	109
DIJ71273	177
DIJ71711	177
DIJ71776	109
DIJ71778	110
DIJ71895-1	178MP
DIJ71958	116
DIJ71959	116
DIJ71960	177
DIJ71961	502
DIJ72163	506
DIJ72164	177
DIJ72165	139A
DIJ72166	109
DIJ72167	506
DIJ72168	116
DIJ72169	5096A
DIJ72170	506
DIJ72171	506
DIJ72172	5073A
DIJ72174	506
DIJ72290	506
DIJ72291	506
DIJ72292	156
DIJ72293	137A
DIJ72294	109
DIJ72349	109
DIK	125
DIL	116
DIM	136A
DIS	143A
DIS-1S	116
DIT	144A
DK19	109
DK20	109
DK21	109
DL1A	3050
DL-1A	3050
DL-10	3050
DL10A	3050
DL-10A	3050
DL101	3051
DL-101	3051
DL-101A	3051
DL-707	3061
DL-707R	3052
DL-727	3074
DL1001A	3051

To Be Replaced	ECG Replacement
DL-1001A	3051
DLM286	761
DM-1	726
DM-9	736
DM9	736
DM11	709
DM-11	709
DM11A	709
DM-11A	709
DM14	718
DM-14	718
DM-19	805
DM20	744
DM-20	744
DM24	719
DM-24	719
DM26	721
DM-26	721
DM30	721
DM-30	721
DM31	709
DM-31	709
DM-32	744
DM32	744
DM-33	964
DM35	806
DM-35	806
DM36	801
DM40	778
DM41	737
DM-41	737
DM44	743
DM-44	743
DM50	983
DM-50	983
DM-51	788
DM51	788
DM54	719
DM-54	719
DM61	788
DM74H00J	74H00
DM74H00N	74H00
DM74H01J	74H01
DM74H01N	74H01
DM74H04J	74H04
DM74H04N	74H04
DM74H05J	74H05
DM74H05N	74H05
DM74H08J	74H08
DM74H08N	74H08
DM74H10J	74H10
DM74H10N	74H10
DM74H11J	74H11
DM74H11N	74H11
DM74H20J	74H20
DM74H20N	74H20
DM74H21J	74H21
DM74H21N	74H21
DM74H22J	74H22
DM74H22N	74H22
DM74H30J	74H30
DM74H30N	74H30
DM74H40J	74H40
DM74H40N	74H40
DM74H50J	74H50
DM74H50N	74H50
DM74H51J	74H51
DM74H51N	74H51
DM74H52J	74H52
DM74H52N	74H52
DM74H53J	74H53
DM74H53N	74H53
DM74H54J	74H54
DM74H54N	74H54
DM74H55J	74H55
DM74H55N	74H55
DM74H60J	74H60
DM74H60N	74H60
DM74H61J	74H61
DM74H61N	74H61
DM74H62J	74H62
DM74H62N	74H62
DM74H71J	74H71
DM74H71N	74H71
DM74H72J	74H72
DM74H72N	74H72
DM74H73J	74H73
DM74H73N	74H73
DM74H74J	74H74
DM74H74N	74H74
DM74H76J	74H76
DM74H76N	74H76
DM74H78J	74H78
DM74H78N	74H78
DM74L92N	74LS92
DM74LS00	74LS00
DM74LS00N	74LS00
DM74LS02	74LS02
DM74LS02N	74LS02
DM74LS03	74LS03
DM74LS03N	74LS03
DM74LS05	74LS05
DM74LS05N	74LS05
DM74LS08	74LS08
DM74LS08N	74LS08
DM74LS10	74LS10
DM74LS10N	74LS10
DM74LS11	74LS11
DM74LS11N	74LS11
DM74LS14	74LS14
DM74LS14N	74LS14
DM74LS20	74LS20
DM74LS20N	74LS20

To Be Replaced	ECG Replacement
DM74LS27	74LS27
DM74LS27N	74LS27
DM74LS30	74LS30
DM74LS30N	74LS30
DM74LS32	74LS32
DM74LS32N	74LS32
DM74LS38	74LS38
DM74LS38N	74LS38
DM74LS42	74LS42
DM74LS42N	74LS42
DM74LS51	74LS51
DM74LS51N	74LS51
DM74LS74	74LS74A
DM74LS74N	74LS74A
DM74LS75	74LS75
DM74LS75N	74LS75
DM74LS83	74LS83A
DM74LS83N	74LS83A
DM74LS85	74LS85
DM74LS85N	74LS85
DM74LS93	74LS93
DM74LS93N	74LS93
DM74LS107	74LS107
DM74LS107N	74LS107
DM74LS109	74LS109A
DM74LS109N	74LS109A
DM74LS123	74LS123
DM74LS123N	74LS123
DM74LS138	74LS138
DM74LS138N	74LS138
DM74LS151	74LS151
DM74LS151N	74LS151
DM74LS153	74LS153
DM74LS153N	74LS153
DM74LS157	74LS157
DM74LS157N	74LS157
DM74LS161	74LS161A
DM74LS161N	74LS161A
DM74LS163	74LS163A
DM74LS163N	74LS163A
DM74LS164	74LS164
DM74LS164N	74LS164
DM74LS174	74LS174
DM74LS174N	74LS174
DM74LS175	74LS175
DM74LS175N	74LS175
DM74LS191	74LS191
DM74LS191N	74LS191
DM74LS193	74LS193
DM74LS193N	74LS193
DM74LS195	74LS195
DM74LS195N	74LS195A
DM74LS221	74LS221
DM74LS221N	74LS221
DM74LS253	74LS253
DM74LS253N	74LS253
DM74LS257	74LS257
DM74LS257N	74LS257
DM74LS266	74LS266
DM74LS266N	74LS266
DM74LS280	74LS280
DM74LS280N	74LS280
DM74LS298	74LS298
DM74LS298N	74LS298
DM74LS367	74LS367
DM74LS367N	74LS367
DM74S00J	74S00
DM74S00N	74S00
DM74S03J	74S03
DM74S03N	74S03
DM74S04J	74S04
DM74S04N	74S04
DM74S05J	74S05
DM74S05N	74S05
DM74S10J	74S10
DM74S10N	74S10
DM74S11J	74S11
DM74S11N	74S11
DM74S20J	74S20
DM74S20N	74S20
DM74S22J	74S22
DM92	964
DM94	960
DM104	977
DM106	981
DM112	964
DM182-30-3801	123AP
DM930N	9930
DM932N	9932
DM933N	9933
DM935N	9935
DM936N	9936
DM937N	9937
DM944N	9944
DM945N	9945
DM946N	9946
DM948N	9948
DM949N	9949
DM957N	9157
DM961N	9961
DM962N	9962
DM963N	9963
DM7400	7400
DM7400N	7400
DM7401N	7401
DM7402N	7402
DM7403N	7403
DM7404N	7404
DM7405N	7405
DM7406N	7406
DM7407N	7407
DM7408N	7408
DM7409N	7409
DM7410N	7410
DM7411N	7411

To Be Replaced	ECG Replacement
DM7413N	7413
DM7414N	7414
DM7416N	7416
DM7417N	7417
DM7420N	7420
DM7423N	7423
DM7425N	7425
DM7426N	7426
DM7427N	7427
DM7430N	7430
DM7432N	7432
DM7437N	7437
DM7438N	7438
DM7440N	7440
DM7441AN	7441
DM7442N	7442
DM7445N	7445
DM7450N	7450
DM7451N	7451
DM7453N	7453
DM7454N	7454
DM7460N	7460
DM7470N	7470
DM7472N	7472
DM7473N	7473
DM7474N	7474
DM7475N	7475
DM7476N	7476
DM7483N	7483A
DM7486N	7486
DM7488N	7488
DM7489N	7489
DM7490	7490
DM7490N	7490
DM7491AN	7491
DM7492N	7492
DM7493N	7493A
DM7495N	7495
DM7496N	7496
DM8000N	7400
DM8502N	74107
DM8530N	7490
DM8563N	74193
DM9093N	9093
DM9094N	9094
DM9097N	9097
DM9099N	9099
DM74107N	74107
DM74109N	74109
DM74121N	74121
DM74125	74125
DM74125N	74125
DM74126	74126
DM74132	74132
DM74132N	74132
DM74145N	74145
DM74150N	74150
DM74151N	74151
DM74153N	74153
DM74154N	74154
DM74155N	74155
DM74156N	74156
DM74162	74162
DM74174N	74174
DM74175N	74175
DM74180N	74180
DM74181N	74181
DM74182N	74182
DM74190N	74190
DM74191N	74191
DM74196N	74196
DM74197N	74197
DM74198N	74198
DM74199N	74199
DN	123A
DN20-00453	128
DN811	9400
DN819	9200
DN850	9401
DN1946	9946
DND800	177
DNX4	459
DNX4A	459
DO18(DIODE)	177
DO30(DIODE)	116
DP100	125
DR1	116
DR1PR	116
DR2	116
DR3	116
DR4	116
DR5	116
DR100	116
DR200	116
DR291	109
DR300	116
DR351	109
DR352	109
DR365	109
DR385	109
DR400	116
DR426	109
DR427	116
DR434	109
DR435	116
DR449	109
DR464	109
DR500	116
DR600	116
DR668	116
DR669	116
DR670	116
DR671	116
DR695	116
DR698	116

To Be Replaced	ECG Replacement
DR699	116
DR700	125
DR800	125
DR826	116
DR848	116
DR863	116
DR900	125
DR1000	125
DR1050	116
DR1100	116
DR1200	116
DR1575	177
DR1600	125
DR2100	116
DR3100	125
DR5101	116
DR5102	116
DR-104532	5642
DRA050	156
DRC-81252	102
DRC-87540	123
DRS1	116
DRS2	156
DRS102	116
DRS104	116
DRS106	116
DRS107	125
DRS108	125
DRS-110	125
DRZ2100	116
DS-0065	116
DS1	116
DS1-002-0	177
DS1B	123A
DS-1 (Delco)	103A
DS1K	116
DS-1K	125
DS1K7	116
DS-1M	116
DS1M	156
DS1N	116
DS1P	116
DS-1P	116
DS1S88	519
DS-1U	507
DS-1.5-2	156
DS2	101
DS2K	116
DS2M	125
DS2N	116
DS-2N	156
DS3	102A
DS4	101
DS5	101
DS6	101
DS7	101
DS8	101
DS-8	102A
DS9	101
DS11	101
DS12	101
DS13	102A
DS-13	116
DS-13A(Sanyo)	116
DS-13B(Sanyo)	116
DS-13(Courier)	116
DS-14	102A
DS-14(Diode)	116
DS-14(Sanyo)	507
DS-15A(Sanyo)	506
DS-15B(Sanyo)	506
DS16	102A
DS-16A	116
DS-16A(Sanyo)	125
DS-16B(Sanyo)	116
DS-16B(Sylvania)	116
DS-16C(Sanyo)	116
DS-16D	116
DS-16D(Sanyo)	116
DS16E	116
DS-16E(Sanyo)	116
DS16N	116
DS16NA	125
DS16NB	116
DS16NC	116
DS16ND	116
DS16NE	116
DS16NE(Sony)	506
DS-16NY	116
DS-16(Sears Diode)	116
DS-16YA	116
DS17	116
DS-17-6A	116
DS17(Admiral)	116
DS17N	116
DS17(Rectifier)	116
DS-17(Sanyo)	116(2)
DS17(Tran)	102A
DS18	116
DS-18	116
DS-18(Delco)	109
DS-18(GE)	116(2)
DS18N	116
DS-18(Sanyo)	116(2)
DS18(Sears)	116(2)
DS19	116(2)
DS-19	102A
DS-19(Rectifier)	116
DS-19(Sanyo)	116(2)
DS21	100
DS22	100
DS23	100
DS24	126
DS25	126

To Be Replaced	ECG Replacement
DS26	102A
DS27	109
DS-27	109
DS-28(Delco)	100
DS29	102A
DS-31	5071A
DS31	177
DS-31(Delco)	177
DS-31(Diode)	177
DS-31(Zener)	5071A
DS33(Delco)	109
DS34	160
DS35	160
DS36	126
DS37	160
DS38	126
DS38(Craig)	116
DS38(Delco)	160
DS38(Sanyo)	116
DS39	110
DS41	160
DS42	160
DS44	123A
DS45	123A
DS46	123A
DS47	123A
DS-47	123A
DS50	136A
DS51	126
DS52	126
DS53	100
DS-55	614
DS55	614
DS56	160
DS58(SANYO)	116
DS60	172
DS-60	172
DS62	160
DS63	160
DS64	160
DS65	160
DS66	123A
DS-66	123A
DS66	123A
DS-66L	123A
DS67	123A
DS-67	123A
DS67W	123A
DS68	106
DS-68	106
DS71	107
DS-71	107
DS72	107
DS-72	107
DS73	107
DS74	107
DS-74	107
DS75	107
DS76	123A
DS-76	123A
DS77	123A
DS78	161
DS-78	161
DS-79	116
DS79	116
DS-79(Delco)	116
DS80	116
DS-80	116
DS81	161
DS82	159
DS-82	159
DS83	159
DS-83	159
DS85	161
DS-85	161
DS-86	129
DS88	132
DS-88	132
DS89	117
DS-94	123A
DS94	123A
DS96	106
DS-97	177
DS97	177
DS97(Delco)	177
DS-102	222
DS104	177
DS104(Zener)	137A
DS-105	222
DS105	222
DS-105K	222
DS105K	222
DS-106	222
DS-107	135A
DS-108	142A
DS-110	144A
DS-113	519
DS-113A	506
DS113B	506
DS-113B	506
DS-117	177
DS-117(ZENER)	143A
DS130	116
DS-130	116
DS-130A	116
DS130B	116
DS-130B	116
DS-130C	116
DS130D	116
DS130E	116
DS-130E	116
DS130N	116
DS130ND	116
DS130Y	116
DS-130Y	116

To Be Replaced	ECG Replacement
DS-130YB	116
DS130YC	116
DS-130YE	116
DS130YE	116
DS-130YE	116
DS-131	116
DS131	116
DS131A	116
DS-131A	116
DS131A	116
DS131B	116
DS-131B	116
DS131B	116
DS-132	116
DS-132A	116
DS132A	116
DS-132B	116
DS133A	116(2)
DS133B	506
DS-149	5072A
DS149	5072A
DS-159	5071A
DS160(G.E.)	116
DS-169	143A
DS-184	156
DS-189	5074A
DS189	5074A
DS-410	177
DS410	177
DS-410(Ampex)	177
DS410(Courier)	177
DS410(Emerson)	177
DS410(FANON)	177
DS410(G.E.)	109
DS-410(Motorola)	123A
DS410(Olympic)	177
DS410R	177
DS410R(G.E.)	109
DS410(Westinghouse)	177
DS422	177
DS430	116
DS441	177
DS442	177
DS-442	177
DS442FM	177
DS-442(Sears)	177
DS443	177
DS448	519
DS-448	519
DS501	105
DS-501	105
DS502	105
DS503	104
DS-503	104
DS504	105
DS505	105
DS506	105
DS509	130
DS-509	130
DS512	128
DS-512	128
DS-513	152
DS513	152
DS-514	130
DS515	121
DS-515	121
DS519	130
DS520	121
DS525	105
DS570	105
DS-742	107
DS1005-1X8628	519
DS1588	519
DS2471	177
DS2473	519
DS4448	519
DS5733	5142A
DS5775	5152A
DS-IM	116
DSA150	177
DSI-104-2	519
DSS153	177
DSS188	109
DSS953	156
DSS16685	109
DSZ5110	5156A
DSZ5706	5120A
DSZ5707	5121A
DSZ5708	5122A
DSZ5709	5124A
DSZ5710	5125A
DSZ5712	5127A
DSZ5713	5128A
DSZ5714	5129A
DSZ5715	5130A
DSZ5716	5131A
DSZ5718	5133A
DSZ5720	5135A
DSZ5722	5136A
DSZ5724	5137A
DSZ5727	5139A
DSZ5730	5141A
DSZ5736	5143A
DSZ5756	5148A
DSZ5760	5149A
DT18(Chan.Master)	116
DT41	121
DT80	105
DT100	105
DT161	123A
DT230B	506
DT401	104
DT1003	154
DT1040	121
DT1110	128

To Be Replaced	ECG Replacement
DT1111	128
DT1112	128
DT1120	128
DT1121	128
DT1122	128
DT1311	128
DT1321	128
DT1510	128
DT1511	128
DT1512	128
DT1520	128
DT1521	128
DT1522	128
DT1602	154
DT1603	154
DT1610	123
DT1612	154
DT1613	154
DT1621	128
DT3301	175
DT3302	175
DT4011	130
DT4110	130
DT4111	130
DT4120	130
DT4121	130
DT4303	162
DT4304	162
DT4305	162
DT4306	162
DT6110	121
DTG110	121
DTG110A	179
DTG110B	179
DTG400M	179
DTG600	179
DTG601	179
DTG602	179
DTG603	179
DTG603M	179
DTG1010	127
DTG1011	121
DTG1040	121
DTG1110	127
DTG1200	179
DTG2000	179
DTG2000A	179
DTG2100	179
DTG2100A	179
DTG2200	179
DTG2400	179
DTN206	128
DTS013	164
DTS0710	162
DTS0713	164
DTS103	284
DTS104	284
DTS105	284
DTS106	284
DTS107	284
DTS108	284
DTS310	283
DTS311	283
DTS401	283
DTS402	163A
DTS403	283
DTS409	283
DTS410	283
DTS411	385
DTS413	283
DTS423	283
DTS423M	283
DTS424	163A
DTS425	163A
DTS430	283
DTS431	283
DTS431M	283
DTS701	164
DTS702	165
DTS704	165
DTS801	164
DTS802	165
DTS804	165
DTS3705	162
DTS3705A	162
DTS3705B	162
DTuL9093	9093
DTuL9099	9099
DTuL9930	9930
DTuL9932	9932
DTuL9933	9933
DTuL9935	9935
DTuL9936	9936
DTuL9944	9944
DTuL9945	9945
DTuL9946	9946
DTuL9948	9948
DTuL9949	9949
DTuL9961	9961
DTuL9962	9962
DTuL9963	9963
DU1	160
DU2	160
DU3	102A
DU4	158
DU5	102A
DU6	104
DU7	105
DU12	160
DU47	105
DU400	116
DU600	116
DU800	125
DU1000	125
DV2209	614

To Be Replaced	ECG Replacement
DVMV1Y	601
DVR-8	964
DVV004	614
DW6034/M	123A
DW6195	128
DW 6505	123A
DW 6982	128
DW 7375	123A
DW 7655	234
DW 7655 LV00223	234
DX0057	147A
DX-0061	136A
DX-0069	5075A
DX-0099	116
DX0112	135A
DX0113	5074A
DX-0150	601
DX0150	601
DX0160	109
DX-0161	109
DX0161	109
DX-0162	109
DX0162	109
DX-0241	109
DX-0259	156
DX0270	177
DX-0270	177
DX-0272	177
DX-0273	519
DX0273	519
DX0282	116
DX-0287	177
DX-0299	519
DX-0307	612
DX-0322	177
DX0399	5074A
DX-0402	139A
DX0445	116
DX-0475	116
DX-0529	134A
DX-0530	5013A
DX-0549	5071A
DX-0551	109
DX-0551(DIODE)	109
DX-0551(ZENER)	145A
DX-0585	116
DX-0681	109
DX-0697	605
DX0710	137A
DX0718	614
DX0719	116
DX-0722	614
DX-0723	610
DX-0725	109
DX-0729	5072A
DX-0733	519
DX-0734	109
DX-0735	519
DX-0735(ZENER)	136A
DX-0736	5072A
DX-0737	136A
DX-0748	138A
DX-0749	612
DX-0750	601
DX-0752	601
DX-0893	116
DX-0955	109
DX-0985	177
DX-0986	139A
DX-0987	135A
DX0989	135A
DX0990	5070A
DX0991	5072A
DX-0994	140A
DX-0995	5304
DX520	116
DX-1007	614
DX-1008	519
DX-1013	138A
DX1018	108
DX6873	109
DX7429	519
DZ-081	5072A
DZ-092	139A
DZ0500	135A
DZ0610	137A
DZ0710	138A
DZ0720	5015A
DZ0731	134A
DZ0750	138A
DZ0820	5072A
DZ0900	139A
DZ0901	139A
DZ0910	139A
DZ0921	139A
DZ2(8 2A)	5072A
DZ10	139A
DZ10A	140A
DZ12	143A
DZ12A	142A
DZ13	143A
DZ15A	145A
DZ27A	146A
DZ33A	147A
DZ82A	150A
DZ1621	5075A
E0011	614
E0018	109
E01	457
E02	457
E-044A	102A
E-065	126
E-066	126
E-067	126
E-068	126

To Be Replaced	ECG Replacement
E-070	102A
E-075L	116
E-0704W	116
E0771-6	144A
E0771-7	142A
E0788C	116
E-01381	128
E03090-002	167
E03155-001	116
E03155-002	116
E1	116
E1A	107
E1CM-0060	1155
E1M3	125
E1N3	125
E2	116
E3	116
E4	158
E5	116
E6	116
E8	125
E9	125
E10	125
E13-000-03	123A
E13-000-04	123A
E13-001-02	159
E13-001-03	159
E13-001-04	159
E13-002-03	123A
E13-003-00	123A
E13-003-01	123A
E13-004-00	233
E13-005-02	123A
E13-006-02	159
E13-007-00	171
E13-008-00	162
E13-009-00	165
E13-010-00	191
E13-011-00	191
E13-012-00	182
E13-013-03	120
E13-013-04	120
E13-017-01	177
E13-020-00	116
E13-021-01	505
E13-021-03	505
E13-20-00	116
E14C350	116
E21	116
E25C5	116
E41	116
E84	140A
E101	457
E102	457
E102(Elcom)	116
E103	133
E105	126
E106(Elcom)	116
E108(Elcom)	125
E111	467
E125C200	116
E132	102A
E135	116
E143	116
E146	116
E150L	116
E158	102A
E-167-228	128
E181	102A
E181A	102A
E181B	102A
E181C	102A
E181D	102A
E185B121712	157
E201	457
E202	457
E202(Elcom)	156
E210	123A
E211	451
E212	123A
E213	159
E230	457
E231	457
E241	102A
E241A	102A
E241B	102A
E262	142A
E300	312
E300(Elcom)	5809
E300L	116
E302(Elcom)	5802
E304(Elcom)	5804
E305	451
E306(Elcom)	5806
E308(Elcom)	5808
E318-1	128
E629	108
E650L	116
E660	113
E750(Elcom)	116
E752(Elcom)	116
E756(Elcom)	116
E758(Elcom)	125
E760(Elcom)	125
E1011	116
E1018N	116
E1042	167or156(4)
E1124	116
E1176ALC1A	113
E1176R	178MP
E1410	116
E1411	116
E1412	116
E1413	116
E1415	116

To Be Replaced	ECG Replacement
E1440	116
E1852	142A
E2412	100
E2427	101
E2428	101
E2429	101
E2430	123A
E2431	123A
E2434	108
E2435	108
E2436	123A
E2438	160
E2439	160
E2440	160
E2441	128
E2444	123A
E2445	102A
E2447	103A
E2448	102A
E2449	128
E2450	160
E2451	126
E2452	123A
E2453	102A
E2454	123A
E2455	123A
E2459	123A
E2460	124
E2461	123A
E2462	160
E2464	102A&103A(CP)
E2465	102A
E-2465	102A
E2466	103A
E-2466	103A
E2467	102A
E2474	160
E2475	160
E2476	102A
E2477	160
E2478	160
E2479	160
E2480	102A
E2481	102A
E2482	102A
E2484	110
E2486	137A
E-2491B	128
E2495	727
E2496	152
E2497	123A
E2498	129
E2499	123A
E3006	116
E4002	101
E4676B	116
E9625	229
E10116	116
E10157	116
E10171	116
E10172	116
E21135	110
E21430	109
E21431	137A
E24100	116
E24101	156
E24103	123A
E24104	102A
E24105	103A
E24106	102A
E24107	131
E570022-01	175
EA0002	160
EA0007	160
EA0009	102A
EA005	116
EA0013	108
EA0015	116
EA0016	116
EA0031	116
EA0053	160
EA0081	128
EA0086	129
EA0087	129
EA0090	128
EA0091	108
EA0092	123A
EA0093	108
EA0094	108
EA0095	108
EA010	116
EA020	116
EA030	116
EA040	116
EA050	116
EA060	116
EA080	125
EA0X12	152&153
EA15X1	123A
EA15X2	102A
EA15X3	102A
EA15X4	102A
EA15X5	160
EA15X6	105
EA15X7	102A
EA15X8	102A
EA15X9	123A
EA15X10	121
EA15X11	160
EA15X12	121
EA15X13	160
EA15X15	121
EA15X18	123A
EA15X19	102A
EA15X20	123A

To Be Replaced	ECG Replacement
EA15X22	123A
EA15X23	102A
EA15X24	123A
EA15X25	102A
EA15X26	121
EA15X27	160
EA15X28	102A
EA15X29	160
EA15X30	160
EA15X31	123A
EA15X33	121
EA15X35	121
EA15X36	102A
EA15X37	123A
EA15X38	121
EA15X40	160
EA15X41	160
EA15X43	160
EA15X44	123A
EA15X45	123A
EA15X48	108
EA15X49	108
EA15X50	108
EA15X51	108
EA15X52	123A
EA15X53	121
EA15X54	108
EA15X55	108
EA15X56	123A
EA15X57	128
EA15X58	123A
EA15X59	123A
EA15X63	123A
EA15X66	160
EA15X67	102A
EA15X68	123A
EA15X69	106
EA15X70	106
EA15X71	106
EA15X72	123A
EA15X73	123A
EA15X75	123A
EA15X76	123A
EA15X77	123A
EA15X83	123A
EA15X84	123A
EA15X85	123A
EA15X86	123A
EA15X88	121
EA15X89	123A
EA15X91	123A
EA15X94	108
EA15X96	123A
EA15X98	123A
EA15X99	152
EA15X100	130
EA15X101	123A
EA15X102	128
EA15X103	123A
EA15X111	123A
EA15X112	123A
EA15X113	108
EA15X121	175
EA15X123	181
EA15X124	180
EA15X130	229
EA15X131	108
EA15X132	108
EA15X133	126
EA15X134	107
EA15X135	107
EA15X136	123A
EA15X137	123A
EA15X139	131
EA15X140	126
EA15X141	126
EA15X142	123A
EA15X143	123A
EA15X144	128
EA15X152	199
EA15X152(Diode)	177
EA15X153	123A
EA15X154	131
EA15X157	123A
EA15X160	186
EA15X161	199
EA15X162	123A
EA15X163	123A
EA15X164	102A
EA15X165	132
EA15X167	123A
EA15X168	123A
EA15X169	133
EA15X173	121
EA15X176	229
EA15X180	123A
EA15X185	294
EA15X189	123A
EA15X190	229
EA15X192	132
EA15X193	132
EA15X194	129
EA15X203	102A
EA15X207	102A
EA15X212	102A
EA15X213	199
EA15X227	102A
EA15X231	132
EA15X233	159
EA15X237	123A
EA15X238(1 Gate)	132
EA15X238(2 Gate)	220
EA15X239	107
EA15X240	123A
EA15X241	199

To Be Replaced	ECG Replacement
EA15X242	290
EA15X243	185
EA15X244	184
EA15X245	199
EA15X246	123A
EA15X247	172A
EA15X248	186
EA15X249	289
EA15X250	293
EA15X251	229
EA15X256	289
EA15X257	158
EA15X258	199
EA15X259	199
EA15X264	199
EA15X266	172A
EA15X267	289
EA15X268	294
EA15X269	184
EA15X270	185
EA15X271	152
EA15X272	123A
EA15X273	193
EA15X274	192
EA15X278	297
EA15X288	199
EA15X325	199
EA15X326	158
EA15X327	152
EA15X328	153
EA15X329	266
EA15X330	123A
EA15X331	123A
EA15X332	265
EA15X333	152
EA15X334	153
EA15X335	199
EA15X336	199
EA15X337	123A
EA15X338	229
EA15X339	229
EA15X340	199
EA15X341	159
EA15X342	123A
EA15X343	289
EA15X344	297
EA15X345	298
EA15X346	199
EA15X347	299
EA15X349	192
EA15X350	229
EA15X351	229
EA15X352	199
EA15X353	199
EA15X354	199
EA15X355	199
EA15X356	278
EA15X357	294
EA15X359	293
EA15X360	184
EA15X361	199
EA15X362	295
EA15X363	235
EA15X364	123AP
EA15X365	123AP
EA15X366	312
EA15X367	123A
EA15X370	123A
EA15X371	123A
EA15X372	235
EA15X373	123A
EA15X374	229
EA15X376	229
EA15X377	199
EA15X378	297
EA15X379	123A
EA15X380	306
EA15X381	235
EA15X383	306
EA15X384	229
EA15X385	294
EA15X385(FET)	132
EA15X385(Transistor)	294
EA15X386	199
EA15X391	235
EA15X392	236
EA15X393	229
EA15X394	132
EA15X395	290
EA15X396	294
EA15X397	293
EA15X398	306
EA15X400	312
EA15X401	312
EA15X402	222
EA15X404	199
EA15X405	222
EA15X406	186A
EA15X407	152
EA15X408	297
EA15X409	295
EA15X410	235
EA15X412	123A
EA15X413	293
EA15X414	235
EA15X415	316
EA15X416	152
EA15X417	222
EA15X420	294
EA15X421	199
EA15X422	123A
EA15X423	152
EA15X424	297
EA15X425	298
EA15X437	229

To Be Replaced	ECG Replacement
EA15X439	295
EA15X440	235
EA15X446	132
EA15X4064	107
EA15X4531	192
EA15X4532	123A
EA15X4533	289
EA15X4632	159
EA15X4633	290
EA15X4634	159
EA15X6840	102A
EA15X7112	123A
EA15X7113	108
EA15X7114	108
EA15X7115	123A
EA15X7117	107
EA15X7118	123A
EA15X7119	123A
EA15X7120	123A
EA15X7125	107
EA15X7140	108
EA15X7141	108
EA15X7173	319
EA15X7174	319
EA15X7175	123A
EA15X7176	123A
EA15X7177	108
EA15X7178	319
EA15X7179	319
EA15X7215	107
EA15X7228	108
EA15X7231	107
EA15X7232	123A
EA15X7233	229
EA15X7234	229
EA15X7235	229
EA15X7236	229
EA15X7242	229
EA15X7243	108
EA15X7244	229
EA15X7245	199
EA15X7263	108
EA15X7264	107
EA15X7513	123A
EA15X7514	123A
EA15X7516	289
EA15X7517	123A
EA15X7519	192
EA15X7520	123A
EA15X7583	199
EA15X7585	108
EA15X7586	123A
EA15X7587	108
EA15X7588	123A
EA15X7589	123A
EA15X7592	294
EA15X7635	128
EA15X7637	123A
EA15X7638	123A
EA15X7639	294
EA15X7640	108
EA15X7642	123A
EA15X7643	123A
EA15X7722	108
EA15X8118	153
EA15X8119	152
EA15X8122	189
EA15X8126	219
EA15X8130	153
EA15X8442	102A
EA15X8443	103A
EA15X8444	102A
EA15X8502	123A
EA15X8511	123A
EA15X8516	108
EA15X8517	293
EA15X8518	123A
EA15X8521	297
EA15X8522	298
EA15X8524	298
EA15X8529	123A
EA15X8589	108
EA15X8601	229
EA15X8602	229
EA15X8605	185
EA15X8608	108
EA15X8609	108
EA15X8610	108
EA15Y386	199
EA15Y395	290
EA16X1	109
EA16X2	116
EA16X4	141A
EA16X5	109
EA16X6	141A
EA16X8	116
EA16X9	109
EA16X11	109
EA16X20	177
EA16X21	116
EA16X22	109
EA16X27	109
EA16X29	142A
EA16X30	116
EA16X33	116
EA16X34	116
EA16X35	1003
EA16X36	116
EA16X38	5080A
EA16X39	177
EA16X47(Diode)	109
EA16X47(Zener)	138A
EA16X48	109
EA16X49	177
EA16X55	116

To Be Replaced	ECG Replacement
EA16X59	177
EA16X60	177
EA16X61	177
EA16X62	139A
EA16X68	601
EA16X69	601
EA16X71	116
EA16X73	601
EA16X74	139A
EA16X75	177
EA16X76	610
EA16X77	142A
EA16X80	137A
EA16X81	143A
EA16X84	177
EA16X88	138A
EA16X89	5067A
EA16X90	614
EA16X91	519
EA16X92	116
EA16X94	177
EA16X95	177
EA16X96	145A
EA16X97	109
EA16X100	177
EA16X101	177
EA16X105	177
EA16X106	612
EA16X109	140A
EA16X110	177
EA16X114	136A
EA16X116	601
EA16X117	613
EA16X118	136A
EA16X122	519
EA16X123	5071A
EA16X124	145A
EA16X125	138A
EA16X126	5069A
EA16X127	614
EA16X134	177
EA16X135	519
EA16X136	135A
EA16X137	139A
EA16X140	109
EA16X146	177
EA16X147	614
EA16X148	109
EA16X149	156
EA16X150	140A
EA16X152	519
EA16X157	140A
EA16X162	142A
EA16X163	5070A
EA16X164	5075A
EA16X165	136A
EA16X166	610
EA16X171	177
EA16X172	177
EA16X173	5016A
EA16X175	139A
EA16X176	610
EA16X177	614
EA16X187	116
EA16X191	136A
EA16X192	611
EA16X314	139A
EA16X402	5073A
EA16X403	109
EA16X404	116
EA16X405	116
EA16X406	135A
EA16X408	139A
EA16X409	116
EA16X414	109
EA16X415	139A
EA18X364	123A
EA33A8396	1155
EA33X0367	1003
EA33X8351	1027
EA33X8352	1019
EA33X8356	1005
EA33X8363	1180
EA33X8364	799
EA33X8367	1003
EA33X8368	1036
EA33X8371	1124
EA33X8372	1142
EA33X8373	789
EA33X8378	722
EA33X8380	1055
EA33X8381	1181
EA33X8383	1301
EA33X8384	1193
EA33X8385	7473
EA33X8388	1167
EA33X8389	1155
EA33X8392	1192
EA33X8394	1192
EA33X8396	1155
EA33X8398	1193
EA33X8399	9946
EA33X8500	1100
EA33X8508	1249
EA33X8509	1192
EA50X12	152&153
EA54X14	116
EA57X1	116
EA57X3	116
EA57X8	116
EA57X10	116
EA57X11	116
EA57X14	506
EA75X1	116
EA100	125

To Be Replaced	ECG Replacement
EA1072	116
EA1080	123A
EA1081	102A
EA1082	121
EA1123	109
EA1128	123A
EA1129	123A
EA1135	123A
EA1145	123A
EA1318	142A
EA1337	160
EA1338	160
EA1339	160
EA1340	160
EA1341	121
EA1342	160
EA1343	108
EA1344	123A
EA1345	123A
EA1346	102A
EA1405	177
EA1406	123A
EA1407	123A
EA1408	123A
EA1448	116
EA1451	123A
EA1452	123A
EA1499	123A
EA1549	128
EA1562	108
EA1563	108
EA1564	123A
EA1578	123A
EA1581	123A
EA1628	123A
EA1629	123A
EA1630	123A
EA1638	123A
EA1661	177
EA1672	116
EA1684	128
EA1695	123A
EA1696	123A
EA1697	123A
EA1698	128
EA1700	121
EA1703	123A
EA1716	123A
EA1718	123A
EA1733	108
EA1735	123A
EA1740	130
EA1760	717
EA1793	108
EA1872	123A
EA1873	128
EA2131	107
EA2132	107
EA2133	126
EA2134	102A
EA2135	102A
EA2136	158
EA2137	110
EA2140	116
EA2176	102A
EA2271	123A
EA2429	199
EA2488	186
EA2489	123A
EA2490	123A
EA2491	126
EA2493	108
EA2494	107
EA2495	108
EA2496	107
EA2497	126
EA2498	126
EA2499	116
EA2500	142A
EA2501	116
EA2502	109
EA2600	108
EA2601	108
EA2602	108
EA2603	108
EA2604	108
EA2605	108
EA2606	110
EA2607	177
EA2608	136A
EA2608(Diode)	177
EA2738	199
EA2739	123A
EA2740	123A
EA2741	116
EA2770	123A
EA2771	199
EA2812	107
EA3127	109
EA3149	123A
EA3278	133
EA3282	1003
EA3406	108
EA3447	177
EA3674	186
EA3713	229
EA3714	159
EA3715	153
EA3716	152
EA3718	109
EA3719	142A
EA3763	199
EA3827	116
EA3866	139A
EA3989	116

To Be Replaced	ECG Replacement
EA3990	192
EA4025	199
EA4055	152
EA4085	152
EA4112	123A
EA5711	116
EA6801	1000
EA7314	159
EAI-380	184
EB0001	102A
EB0003	102A
EB1(Elcom)	166
EB2(Elcom)	168
EB3(Elcom)	166
EB4(Elcom)	167
EB6(Elcom)	168
EB7(Elcom)	169
EB9(Elcom)	166
EB10(Elcom)	167
EB11(Elcom)	168
EB12(Elcom)	169
EB13(Elcom)	170
EB-134144	194
EC100	125
EC103A	5402
EC103B	5404
EC103D	5405
EC103M	5406
EC103Y	5400
EC106A1	5454
EC106A2	5454
EC106B1	5455
EC106B2	5455
EC106D1	5457
EC106D2	5457
EC106F1	5453
EC106F2	5453
EC106Y1	5452
EC106Y2	5452
EC107A1	5413
EC107A2	5413
EC107B1	5414
EC107B2	5414
EC107D1	5457
EC107D2	5457
EC107F1	5412
EC107F2	5412
EC107Y1	5411
EC107Y2	5411
EC401	116
EC402	116
EC961	130
EC3045	288
ECC-01262	9932
ECC-01263	9945
ECC-01264	9946
ECC-01265	9962
ECC-01266	9951
ECC-01267	9930
ECG733	804
ECR-600-2	116
ED2(Elcom)	112
ED3(Elcom)	112
ED-4	116
ED4(Elcom)	109
ED-5	116
ED-6	116
ED6(Elcom)	109
ED6.2EB	137A
ED7	116
ED7(Elcom)	112
ED8(Elcom)	156
ED9(Elcom)	109
ED10(Elcom)	110MP
ED11(Elcom)	110MP
ED12(Elcom)	109
ED21(Elcom)	177
ED23(Elcom)	506
ED24(Elcom)	173BP
ED29(Elcom)	156
ED31(Elcom)	177
ED32(Elcom)	177
ED33(Elcom)	174
ED46	109
ED-46	109
ED51	160
ED52	100
ED53	100
ED54B	100
ED55	102A
ED56	102A
ED57	102A
ED60	109
ED-60	109
ED123	3020
ED150Z	123A
ED201	3050
ED592K	229
ED592M	108
ED730	3041
ED-1402	123A
ED1402	123A
ED1402A	123A
ED1402A/09-305066	123A
ED1402B	123A
ED1402C	123A
ED1402C/30	123A
ED1402C/30V	123A
ED1402D	123A
ED1402D/30V	123A
ED1402E	123A
ED1403D	123A
ED1403D/30V	123A
ED1502	229
ED1502A	229

To Be Replaced	ECG Replacement
ED1502B	229
ED-1502C	229
ED1502C	229
ED1502D	229
ED1502E	229
ED1502F	229
ED1502R	233
ED1602C	159
ED1602D	159
ED1602D/30V	159
ED1602E	159
ED1702C	293
ED1702L	123A
ED1702L/09-305068	123A
ED1702M	293
ED1702N	293
ED1802-0	159
ED1802C	294
ED1802L	288
ED1802M	294
ED1802N	294
ED1804	116
ED1892	116
ED2106	116
ED2107	116
ED2108	116
ED2109	116
ED2110	116
ED2842	116
ED2843	116
ED2844	116
ED2845	116
ED2846	116
ED2847	125
ED2848	125
ED2849	125
ED2910	125
ED2911	125
ED2912	125
ED2913	125
ED2914	116
ED2915	116
ED2916	116
ED2917	116
ED2918	116
ED2919	116
ED2920	116
ED2921	116
ED2922	125
ED2923	125
ED2924	125
ED3000	116
ED3000A	116
ED3000B	116
ED3001	116
ED3001A	116
ED3001B	116
ED3002	116
ED3002A	116
ED3002B	116
ED3003	116
ED3003A	116
ED3003B	116
ED3003S	116
ED3004	116
ED3004A	116
ED3004B	116
ED3005	116
ED3005A	116
ED3005B	116
ED3006	116
ED3006A	116
ED3006B	116
ED3007	125
ED3007A	125
ED3007B	125
ED3008	125
ED3008A	125
ED3008B	125
ED3009	125
ED3009A	125
ED3009B	125
ED3010	125
ED3010A	125
ED3010B	125
ED219464	109
ED224548	116
ED224550	116
ED329128	116
ED329130	116
ED491130	5073A
ED494583	116
ED498150	5078A
ED511097	116
ED511918	5081A
ED514721	177
ED515790	177
ED516420	177
ED536062	177
ED560913	177
EDC-Q10-1	123A
EDC TR11-1	199
EDC TR11-4	128
EDC TR11-5	128
EDG-0001	109
EDG-0003	109
EDG-0006	109
EDG-1	109
EDG-3	109
EDG-6	109
EDH6023	519
EDJ-363	116
EDMF-15B	503
EDMF25B	504
EDMF-25B	504

To Be Replaced	ECG Replacement
EDMF-25b	504
EDO 219	123A
EDS-0001	177
EDS-0002	116
EDS-0004	116
EDS-0014	177
EDS-0017	116
EDS-0024	116
EDS-0038	601
EDS-0042	614
EDS-1	507
EDS-4	116
EDS-17	116
EDS-24	116
EDS-25	177
EDS-100	123A
EDZ-0041	5072A
EDZ-0042	139A
EDZ-0045	139A
EDZ-2	138A
EDZ-19	136A
EDZ-20	5071A
EDZ-23	139A
EDZ-24	5072A
EE100	102
EER600-2	117
EF1(Elcom)	133
EF2(Elcom)	132
EF3	132
EF4(Elcom)	222
EF5(Elcom)	222
EF100	125
EF200	525
EG100	116
EG100H	116
EGA01-11	5074A
EH2C11	116(3)
EH16X20	177
EI517342	1011
EICM-0037	1052
EICM-0060	1155
EICM-14	1103
EK136	102A
EK159	100
EI3-006-02	159
EL75	229
EL131	312
EL214	128
EL232	123A
EL264	129
EL401	172A
EL403	289
EL-403	289
EL434	107
EM1J2	116
EM9-8	914
EM401	116
EM402	116
EM403	116
EM404	116
EM405	116
EM406	116
EM407	116
EM408	116
EM410	116
EM500	116
EM501	116
EM502	116
EM503	116
EM504	116
EM505	116
EM506	116
EM507	125
EM508	125
EM510	125
EM1021	116
EMS72258	519
EMS72272	519
EMS73278	128
EMS73279	128
EMS-73500	123A
EN697	123A
EN706	123A
EN708	123A
EN718A	108
EN722	159
EN744	108
EN914	108
EN916	108
EN918	108
EN930	123A
EN1132	159
EN1613	128
EN1711	128
EN2222	123A
EN2482	123AP
EN2878	289
EN2894	159
EN2894A	159
EN2905	129
EN2907	159
EN3009	123A
EN3011	108
EN3013	123A
EN3014	123A
EN3250	159
EN3502	129
EN3504	159
EN3563	108
EN3904	128
EN3905	159
EN3906	159
EN3962	159
EN5172	107
ENB251-10A	524

To Be Replaced	ECG Replacement
ENB251-14A	524
ENB251-20A	524
EO44A	102A
EO65	100
EO66	100
EO67	100
EO68	100
EO70	126
EO105	100
EO704	116
EO771-3	139A
EP5X5	116
EP6X10	177
EP6X11	506
EP15X1	123A
EP15X2	123A
EP15X3	199
EP15X4	129
EP15X5	128
EP15X5(Transistor)	128
EP15X6	229
EP15X7	123A
EP15X8	123A
EP15X9	123A
EP15X10	191
EP15X11	196
EP15X12	238
EP15X13	193
EP15X14	196
EP15X15	153
EP15X16	124
EP15X17	159
EP15X18	154
EP15X19	291
EP15X20	233
EP15X21	193
EP15X22	152
EP15X23	153
EP15X24	187
EP15X25	186
EP15X26	159
EP15X27	171
EP15X28	165
EP15X29	181
EP15X30	196
EP15X32	186
EP15X33	128
EP15X34	186
EP15X35	124
EP15X43	196
EP15X44	197
EP15X45	165
EP15X47	123A
EP15X48	159
EP15X48(NPN)	123A
EP15X48(PNP)	159
EP15X49	123A
EP15X50	198
EP15X51	193
EP15X53	159
EP15X54	233
EP15X55	108
EP15X60	159
EP15X61	154
EP15X68	152
EP15X90	159
EP16X1	178MP
EP16X2	5080A
EP16X3	109
EP16X4	177
EP16X5	145A
EP16X6	113
EP16X7	128
EP16X10	506
EP16X11	506
EP16X12	138A
EP16X13	116
EP16X15	145A
EP16X16	5081A
EP16X17	5100A
EP16X20	177
EP16X21	110
EP16X22	177
EP16X23	177
EP16X24	506
EP16X25	135A
EP16X27	177
EP16X36	142A
EP36X12	138A
EP57X1	116
EP57X2	505
EP57X3	513
EP57X4	116
EP57X5	506
EP57X6	513
EP57X12	116
EP62X41	522
EP62X84	522
EP84X1	749
EP84X2	712
EP84X3	790
EP84X4	783
EP84X5	783
EP84X6	712
EP84X7	728
EP84X9	790
EP84X10	749
EP84X11	7420
EP84X11(IC)	7420
EP84X12	738
EP84X18	7493A
EP84X19	74123
EP100	186
EP101A	187
EP200	116

To Be Replaced	ECG Replacement
EP400	116
EP431	292
EP600	116
EP800	125
EP947	184
EP1000	125
EP1259-2	116
EP1428-2H	116
EP2195	186A
EP-2798	113
EP3053	152
EP 3053	152
EP3149	116
EP-3572	113
EP-3641-1	503
EP-5219-1	115
EP-5641H-2	504
EPB22-15	506
EPS57X3	116
EPS57X5	116
EPX15X17	159
EPX54	161
EQ01-07RE	5071A
EQ-09R	139A
EQ107RE	5071A
EQA01-02R	5080A
EQA01-05	135A
EQA01-05S	135A
EQA01-05T	136A
EQA01-06	5071A
EQA01-06R	5070A
EQA01-06S	5070A
EQA01-06SB	137A
EQA01-06T	137A
EQA01-07	5071A
EQA01-07R	5071A
EQA01-07RE	5071A
EQA-01-07S	138A
EQA01-07X	5071A
EQA01-08	5072A
EQA-01-08	5072A
EQA01-08R	5072A
EQA01-08S	5072A
EQA01-09	139A
EQA-01-09P	139A
EQA01-09R	139A
EQA01-09S	139A
EQA01-061	5070A
EQA01-072	138A
EQA01-075	5071A
EQA01-7RE	5071A
EQA01-10S	140A
EQA01-11	5074A
EQA-01-11	5074A
EQA01-11R	5074A
EQA-01-11R	5074A
EQA01-11S	5074A
EQA01-11SE	5074A
EQA01-11Z	5074A
EQA01-12	142A
EQA01-12R	142A
EQA01-12S	142A
EQA01-12Z	142A
EQA01-13	143A
EQA01-13R	143A
EQA01-14R	144A
EQA01-14RD	144A
EQA01-15R	145A
EQA01-16	5075A
EQA01-17R	5076A
EQA01-18	5077A
EQA01-19R	5078A
EQA01-20RB	5079A
EQA01-21R	5079A
EQA01-22R	5080A
EQA01-30	5084A
EQA01-32R	147A
EQA01-35	5085A
EQA01-35R	143A
EQA01-35RC	5143A
EQA01-Z4RA	5084A
EQA-09	139A
EQA09R	139A
EQA017RE	5071A
EQA0105T	136A
EQA-0109S	139A
EQA9	139A
EQA 9	139A
EQA111SE	5074A
EQA-0109S	139A
EQB01	142A
EQB01-02R	142A
EQB01-05	135A
EQB01-06	5070A
EQB01-06A	5070A
EQB01-06V	5070A
EQB01-07	138A
EQB01-08	5072A
EQB01-09	139A
EQB01-09S	139A
EQB01-2B	142A
EQB01-10	140A
EQB01-11	5074A
EQB01-11V	5074A
EQB01-11Z	5074A
EQB01-12	142A
EQB01-12A	142A
EQB01-12B	142A
EQB01-12BV	142A
EQB01-12R	142A
EQB01-12Z	142A
EQB01-14	144A
EQB01-15	145A
EQB01-15Z	145A
EQB01-15ZB	145A

To Be Replaced	ECG Replacement
EQB01-16	5075A
EQB01-18	5077A
EQB01-19	5078A
EQB01-33	147A
EQB01-90S	139A
EQB01-128V	142A
EQB-0108	5072A
EQB01-10	140A
EQE01-12A	142A
EQF-0009	312
EQF-0020	132
EQF-4	132
EQG01-12A	142A
EQG-6	121
EQG-8	104
EQG-9	102A
EQG-15	102A
EQH-1	103A
EQR-0016	294
EQR-0098	290
EQS-006	199
EQS-0010	123A
EQS-0018	233
EQS-0060	199
EQS-0061	199
EQS-0073	229
EQS-0078	199
EQS-0100	123A
EQS-0102	199
EQS-0140	152
EQS-0159	236
EQS-0160	235
EQS-0165	297
EQS-0184	306
EQS-0192	289
EQS-0195	123A
EQS-0196	123A
EQS-0198	123A
EQS-5	123A
EQS-9	123A
EQS-13	123A
EQS-18	107
EQS-19	313
EQS-20	313
EQS-21	108
EQS-22	123A
EQS-56	195A
EQS-57	195A
EQS-60	237
EQS-61	123A
EQS-78	199
EQS-86	237
EQS-89	186A
EQS-100	123A
EQS131	128
EQS-131	199
EQS-139	229
EQS-140	152
EQS140	152
EQS-141	236
ER026-13L	506
ER1	116
ER1(Elcom)	118
ER2	116
ER2(Elcom)	119
ER5(Elcom)	120
ER7(Elcom)	500A
ER9(Elcom)	513
ER10(Elcom)	5892
ER10R(Elcom)	5893
ER11	116
ER11(Elcom)	5894
ER11R(Elcom)	5895
ER12	116
ER12(Elcom)	5896
ER12R(Elcom)	5897
ER13(Elcom)	5898
ER13R(Elcom)	5899
ER14(Elcom)	5900
ER14R(Elcom)	5901
ER15(Elcom)	5902
ER15R(Elcom)	5903
ER15X4	160
ER15X5	160
ER15X6	160
ER15X7	102A
ER15X9	102A
ER15X10	121
ER15X11	160
ER15X12	160
ER15X13	160
ER15X14	160
ER15X15	160
ER15X16	160
ER15X17	102A
ER15X18	102A
ER15X19	160
ER15X20	160
ER15X21	160
ER15X22	102A
ER15X23	102A
ER15X24	160
ER15X25	160
ER15X26	160
ER16(Elcom)	5904
ER17(Elcom)	5908
ER17R(Elcom)	5909
ER18(Elcom)	5910
ER18R(Elcom)	5911
ER20(Elcom)	5980
ER20R(Elcom)	5981
ER21	116
ER21(Elcom)	5982
ER21R(Elcom)	5983
ER22	116
ER22(Elcom)	5986
ER22R(Elcom)	5987
ER23(Elcom)	5988
ER23R(Elcom)	5989
ER24(Elcom)	5990
ER24R(Elcom)	5991
ER25(Elcom)	5992
ER25R(Elcom)	5993
ER26(Elcom)	5994
ER26R(Elcom)	5995
ER27(Elcom)	5998
ER28(Elcom)	6002
ER28R(Elcom)	6003
ER31	116
ER32(Elcom)	500A
ER33(Elcom)	504
ER34(Elcom)	505
ER41	116
ER42	116
ER51	116
ER57X2	116
ER57X3	116
ER57X4	116
ER61	116
ER62	116
ER81	125
ER101	116
ER102	117
ER102D	116
ER103D	116
ER103E	116
ER104D	116
ER105D	116
ER106D	116
ER107D	125
ER108D	125
ER181	116
ER182	116
ER183	116
ER184	116
ER185	116
ER186	125
ER187	125
ER201	116
ER301	116
ER308	125
ER310	125
ER381	116
ER401	116
ER501	116
ER601	116
ER801	125
ER824-06	506
ER1001	125
ERA01-35RC	143A
ERB01-05	135A
ERB01-011Z	5074A
ERB01-10	525
ERB-07RE	5071A
ERB11-01	116
ERB22-15	116
ERB24	552
ERB24-01A	506
ERB24-02B	506
ERB24-04A	506
ERB24-04B	506
ERB24-04C	506
ERB24-04D	506
ERB24-06	552
ERB-24-06A	552
ERB24-06B	552
ERB24-06C	552
ERB24-06D	552
ERB24(GE)	552
ERB26-20	525
ERB26-20L	525
ERB26-20M	525
ERB28-04	506
ERB2406A	552
ERB2406C	552
ERC01-02	125
ERC01-06	125
ERC04-10	125
ERC24-04	116
ERC26-13	506
ERC26-13L	551
ERC27-13	506
ERCC4-06	125
ERD02-06	125
ERD300	116
ERD400	116
ERD700	125
ERD800	125
ERD900	125
ERD1000	125
ERV-02F2150	116
ERZ08A3K101	601
ERZ-08D3K121	5097A
ERZ15A3S251	601
ERZ15A32S251	601
ERZ15D3K471	601
ES1(Elcom)	160
ES2(Elcom)	102A
ES3	126
ES3(Elcom)	102A
ES4(Elcom)	158
ES5	101
ES5(Elcom)	103A
ES6(Elcom)	103A
ES7	104
ES7(Elcom)	131
ES8(Elcom)	160
ES9	104
ES9(Elcom)	104
ES10	105
ES10(Elcom)	105
ES11(Elcom)	160
ES13	104
ES13(Elcom)	104
ES14	126
ES14(Elcom)	160
ES15(Elcom)	160
ES15X1	123A
ES15X2	108
ES15X3	108
ES15X4	102A
ES15X6	108
ES15X7	123A
ES15X8	102A
ES15X9	159
ES15X10	108
ES15X11	123A
ES15X12	152
ES15X14	123A
ES15X16	123A
ES15X17	121
ES15X18	108
ES15X19	108
ES15X20	123A
ES15X22	233
ES15X23	123A
ES15X24	123A
ES15X30	108
ES15X31	102A
ES15X32	102A
ES15X37	123A
ES15X42	123A
ES15X43	121
ES15X45	104
ES15X48	103A
ES15X49	102A
ES15X50	102A
ES15X51	104
ES15X52	127
ES15X53	102A
ES15X54	127
ES15X55	102A
ES15X56	161
ES15X57	161
ES15X58	123A
ES15X59	154
ES15X60	108
ES15X61	126
ES15X62	123A
ES15X63	102A
ES15X64	123A
ES15X65	161
ES15X66	107
ES15X67	107
ES15X68	123A
ES15X69	108
ES15X70	123A
ES15X71	103A
ES15X72	102A
ES15X73	126
ES15X74	103A
ES15X75	158
ES15X76	123A
ES15X77	127
ES15X78	104
ES15X79	161
ES15X80	107
ES15X81	107
ES15X82	107
ES15X83	123A
ES15X84	123A
ES15X85	123A
ES15X86	152
ES15X87	161
ES15X88	161
ES15X89	154
ES15X90	159
ES15X91	228
ES15X92	132
ES15X93	128
ES15X94	165
ES15X95	124
ES15X96	161
ES15X97	107
ES15X98	175
ES15X99	158
ES15X100	102A
ES15X101	159
ES15X102	107
ES15X104	161
ES15X105	161
ES15X106	233
ES15X107	154
ES15X122	161
ES15X123	161
ES15X125	291
ES15X126	163A
ES15X127	233
ES15X128	159
ES16(Elcom)	130
ES16X2	109
ES16X3	109
ES16X5	109
ES16X6	109
ES16X7	109
ES16X10	174
ES16X12	109
ES16X13	116
ES16X14	109
ES16X15	174
ES16X16	506
ES16X20	506
ES16X21	110
ES16X23	177
ES16X24	177
ES16X25	116
ES16X27	177
ES16X28	506
ES16X29	5080A
ES16X30	177
ES16X31	506
ES16X32	177
ES16X33	156
ES16X40	177
ES16X41	5079A
ES16X70	110
ES16X103	109
ES17(Elcom)	102A
ES18	121
ES18(Elcom)	104
ES19	102A
ES19(Elcom)	160
ES20(Elcom)	123A
ES21	105
ES21(Elcom)	121
ES22(Elcom)	128
ES23	102A
ES23(Elcom)	160
ES24(Elcom)	124
ES25	100
ES25(Elcom)	160
ES26	100
ES26(Elcom)	102A
ES27(Elcom)	179
ES28(Elcom)	155
ES29(Elcom)	131
ES30(Elcom)	103A&158
ES31(Elcom)	130
ES32(Elcom)	154
ES33(Elcom)	162
ES34(Elcom)	159
ES35(Elcom)	130MP
ES36(Elcom)	175
ES37(Elcom)	158
ES38(Elcom)	103A
ES39(Elcom)	157
ES40(Elcom)	194
ES41	126
ES41(Elcom)	160
ES42(Elcom)	127
ES43(Elcom)	181
ES44(Elcom)	175
ES45(Elcom)	175
ES46	123
ES46(Elcom)	123A
ES47(Elcom)	6400
ES47X1	116
ES-48	124
ES49(Elcom)	218
ES50(Elcom)	131
ES51(Elcom)	129
ES51X65	128
ES53(Elcom)	123A
ES54(Elcom)	161
ES55(Elcom)	162
ES56(Elcom)	128
ES57(Elcom)	128
ES57X1	116
ES57X2	116
ES57X4	116
ES57X5	116
ES57X6	113
ES57X7	138A
ES57X8	506
ES57X9	506
ES57X11	505
ES57X12	177
ES57X13	503
ES57X14	167or156(4)
ES57X21	503
ES58(Elcom)	184
ES59(Elcom)	179
ES60(Elcom)	185
ES61(Elcom)	226
ES62(Elcom)	128
ES63(Elcom)	176
ES64(Elcom)	219
ES65(Elcom)	159
ES66(Elcom)	182
ES67(Elcom)	183
ES68(Elcom)	185
ES69(Elcom)	223
ES71(Elcom)	162
ES72(ELCOM)	311
ES73(Elcom)	161
ES74(Elcom)	180
ES75(Elcom)	172A
ES75X1	712
ES76(Elcom)	171
ES80(Elcom)	152
ES81	189
ES81(Elcom)	153
ES82(Elcom)	188
ES83(Elcom)	189
ES84	163A
ES84(Elcom)	163A
ES84X1	1008
ES84X2	1018
ES84X3	712
ES85(Elcom)	123A
ES86(Elcom)	161
ES-88	195A
ES89	171
ES89(Elcom)	171
ES90	219
ES90(Elcom)	219
ES91(Elcom)	176
ES92	257
ES93	258
ES94	225
ES94(Elcom)	225
ES95	165
ES95(Elcom)	165
ES96	191
ES96(Elcom)	191
ES97	194
ES97(Elcom)	194
ES103	196
ES104	197
ES105	253
ES106	254
ES107	232
ES108	243
ES109	244
ES112	234
ES113	241
ES114	242
ES501	105
ES501(Elcom)	105
ES503	121
ES503(Elcom)	104
ES1513	503
ES1627	177
ES3110	126
ES3111	126
ES3112	126
ES3113	126
ES3114	126
ES3115	126
ES3116	126
ES3120	102A
ES3121	102A
ES3122	102A
ES3123	102A
ES3124	102A
ES3125	102A
ES3126	102A
ES3266	108
ES4053	722
ES10110	131
ES10186	107
ES10187	108
ES10188	107
ES10189	109
ES10222	123A
ES10223	123A
ES10224	109
ES10225	109
ES10231	199
ES10232	123A
ES10233	116
ES10234	142A
ES15046	107
ES15047	107
ES15049	199
ES15050	123A
ES15051	187
ES15052	199
ES15054	109
ES15056	116
ES15057	177
ES15226	128
ES15227	186
ES-923933-1	149A
ESA-06	116
ESA06	116(4)
ESA213	126
ESA233	126
ESD918964P	128
ESGB01-08	544
ESGB01-09	544
ESK1/02	116
ESK1/06	116
ESKE40C500	116
ESKE125C500	125
ESP11-40	513
ESP11-45	513
ESPA05-30	527
ESQ-141	236
ESSB-01-IR50	519
ET1	160
ET2	160
ET3	102
ET4	102
ET5	102
ET6	104
ET7	105
ET8	101
ET9	101
ET10	103
ET11	103
ET12	126
ET15X1	102A
ET15X2	107
ET15X3	107
ET15X4	121
ET15X5	121
ET15X7	108
ET15X8	128
ET15X9	108
ET15X10	123A
ET15X11	123A
ET15X12	123A
ET15X13	123A
ET15X14	123A
ET15X15	123A
ET15X16	123A
ET15X17	121
ET15X18	108
ET15X19	108
ET15X20	123A
ET15X21	108
ET15X23	108
ET15X24	123A
ET15X25	102A
ET15X26	127
ET15X27	123A
ET15X29	160
ET15X30	108
ET15X31	102A
ET15X32	102A
ET15X33	129
ET15X34	154
ET15X36	128
ET15X37	123A
ET15X38	129
ET15X39	129
ET15X40	127
ET15X41	123A
ET15X42	123A
ET15X43	121
ET15X45	123A
ET16X1	109
ET16X6	112
ET16X7	113
ET16X10	113
ET16X11	113
ET16X13	112
ET16X14	112
ET16X15	142A
ET16X16	117
ET16X17	136A
ET16X19	109
ET16X20	109
ET16X21	109
ET41X27	358A
ET41X37	109
ET41X47	358A
ET51X25	116
ET52X25	116
ET55-25	116
ET55X25	116
ET57X25	116
ET57X26	120
ET57X29	116
ET57X30	116
ET57X31	119
ET57X32	118
ET57X33	116
ET57X35	116
ET57X39	506
ET57X40	506
ET58X32	118
ET200	116
ET400	116
ET600	116
ET1511	102A
ET234843	123A
ET234854	289
ET238894	123A
ET329218	289
ET350335	234
ET352146	289
ET368021	123A
ET379262	199
ET379462	199
ET380834	199
ET392927	210
ET398711	199
ET398777	199
ET412626	123A
ET453611	186A
ET491051	133
ET495371	186
ET517263	199
ET517375	235
ET517994	199
ET539122	294
ETD-1N60	109
ETD1S2788	177
ETD-10D1	116
ETD-10D2	116
ETD-HZ7C	5071A
ETD-RD9.1FB	139A
ETD-RD75	138A
ETD-SD46	109
ETD-SG9150	177
ETD-V06C	116
ETDCDG21	177
ETI-21	1002
ETI-22	801
ETI-23	1155
ETS-003	130
ETS-005	223
ETS-017	175
ETS-068	123A
ETS-069	129
ETS-070	128
ETS-071	129
ETT-CDC-12000	123A
ETTB-2SB176	102A
ETTB-2SB176A	102A
ETTB-2SB176B	102A
ETTB-2SB176R	102A
ETTB-75LB	102A
ETTB-367B	131
ETTC-2SC490	175
ETTC-458LG	123A
ETTC-930D	229
ETTC-945	199
ETTC-CD8000	123A
ETTC-CD12000	123A
ETTC-CD13000	123A
ETTD-235	152
ETX18	123A
EU15X1	108
EU15X2	108
EU15X3	108
EU15X6	108
EU15X27	128
EU15X34	128
EU16X1	109
EU16X2	109
EU16X4	112
EU16X8	114
EU16X11	177
EU16X14	112
EU16X19	110
EU16X20	116
EU57X31	119
EU57X32	118
EU57X38	120
EU57X40	116
EUZ-82	5072A
EVD10E1	116
EVR4	136A
EVR4A	136A
EVR4B	136A
EVR5	137A
EVR5A	137A
EVR5B	137A
EVR9	139A
EVR9A	139A
EVR9B	139A
EVR11	141A
EVR11A	141A
EVR11B	141A
EVR12	142A
EVR12A	142A
EVR12B	142A
EVR15	145A
EVR15A	145A
EVR15B	145A
EVR27	146A
EVR27A	146A
EVR27B	146A
EVR56	148A
EVR56A	148A
EVR56B	148A
EVR82	150A
EVR82A	150A
EVR82B	150A
EVR110	151A
EVR110A	151A
EVR110B	151A
EVS-K112C	113
EW162	108
EW163	107
EW164	107
EW165	107
EW165V	123A
EW166	109
EW167	109
EW168	110
EW169	156
EW169B	116(2)
EW181	123A
EW182	123A
EW183	153
EW183B	175
EW212	161
EWQ202	159
EWS-78	199
EX15X25	102A
EX39-X	705A
EX42-X	714
EX46-X	790
EX48-X	715
EX62-X	790
EX4035	722
EX4053	722
EX-141216	128
EYV320D010JB	601
EYV-320D1R2J	177
EYV320D1R2J3	601
EYV-420D1R5JA	116
EYV420D1R5JB	109
EYZP-307-900	5529
EYZP-384	177
EYZP-546	159
EYZP-623	159
EYZP-632	123A
EYZP-791	123A
EYZP-808	234
EZ3-7(Elcom)	5120A
EZ3-12(Elcom)	5127A
EZ3-14(Elcom)	5129A
EZ3-15(Elcom)	5130A
EZ3-16(Elcom)	5131A
EZ3-20(Elcom)	5135A
EZ3-30(Elcom)	5141A
EZ3(Elcom)	5066A
EZ4(Elcom)	5067A
EZ5-30(Elcom)	5141A
EZ5(Elcom)	5069A
EZ5R6(Elcom)	136A
EZ6(Elcom)	5071A
EZ7(Elcom)	138A
EZ8(Elcom)	5072A
EZ9(Elcom)	139A
EZ10-7(Elcom)	5181A
EZ10-8(Elcom)	5183A
EZ10-10(Elcom)	5186A
EZ10-12(Elcom)	5188A
EZ10-24(Elcom)	5198A
EZ10-28(Elcom)	5201A
EZ10(Elcom)	140A
EZ11(Elcom)	5074A
EZ12(Elcom)	142A
EZ13(Elcom)	143A
EZ14(Elcom)	144A
EZ15(Elcom)	145A
EZ16(Elcom)	5075A

To Be Replaced	ECG Replacement
EZ16X88	5071A
EZ16X102	137A
EZ18(Elcom)	5077A
EZ20(Elcom)	5079A
EZ22(Elcom)	5080A
EZ24(Elcom)	5081A
EZ27(Elcom)	141A
EZ30(Elcom)	5084A
EZ33(Elcom)	147A
EZ36(Elcom)	5085A
EZ39(Elcom)	5086A
EZ47(Elcom)	5088A
EZ56(Elcom)	5090A
EZ62(Elcom)	149A
EZ68(Elcom)	5092A
EZ82(Elcom)	150A
EZ110(Elcom)	151A
EZ150	145A
EZR-0045	139A
EZT308	904
F0010	452
F0010(HEP)	133
F0015	132
F0015(HEP)	132
F0021	132
F0021(HEP)	312
F0082M	725
F-05	116
F0R2D	5400
F1	116
F2	116
F3	116
F4	116
F4-005	725
F5	116
F6	116
F8	125
F8(Transistor)	282
F10	125
F11	239
F11P(Quasar)	239
F11Q	239
F11Q(Quasar)	239
F11(SCR)	5481
F12(SCR)	5482
F13(SCR)	5483
F-14A	125
F14a	116
F14B	125
F14C	125
F-14C	116
F14D	125
F14E	125
F14F	125
F14H	125
F14J	125
F14(SCR)	5483
F15(SCR)	5484
F16H1	137A
F16(SCR)	5484
F17(SCR)	5485
F18(SCR)	5485
F19(SCR)	5486
F20-1001	108
F20-1002	108
F20-1003	108
F20-1004	108
F20-1005	108
F20-1006	102A
F20-1007	102A
F20-1008	102A
F20-1009	102A
F20-1010	109
F20-1012	109
F20-1013	109
F20-1014	109
F20-1015	116
F20-1016	116
F20(SCR)	5480
F21(SCR)	5501
F22(SCR)	5502
F23(SCR)	5503
F24(SCR)	5504
F25(SCR)	5505
F26(SCR)	5506
F27(SCR)	5507
F28(SCR)	5507
F29(SCR)	5508
F30(SCR)	5500
F31A(SCR)	5541
F31(SCR)	5541
F32	5522
F32A(SCR)	5542
F32(SCR)	5542
F33A(SCR)	5543
F33(SCR)	5543
F34	5524
F34A(SCR)	5543
F34(SCR)	5543
F35A(SCR)	5544
F35(SCR)	5544
F36	5526
F36A(SCR)	5544
F36(SCR)	5544
F37A(SCR)	5545
F37(SCR)	5545
F38A(SCR)	5545
F38(SCR)	5545
F39A(SCR)	5546
F39(SCR)	5546
F40A(SCR)	5540
F40(SCR)	5540
F55(SCR)	5520
F56(SCR)	5521
F57(SCR)	5522

To Be Replaced	ECG Replacement
F58(SCR)	5523
F59(SCR)	5524
F60(SCR)	5525
F61(SCR)	5526
F62(SCR)	5527
F63(SCR)	5500
F64(SCR)	5501
F65(SCR)	5502
F66(SCR)	5503
F67E	121
F67(SCR)	5504
F68(SCR)	5505
F69(SCR)	5506
F70(SCR)	5507
F71(SCR)	5520
F72(SCR)	5521
F73(SCR)	5522
F74LS49P	74LS49
F74LS248P	74LS248
F74LS249P	74LS249
F74(SCR)	5523
F75(SCR)	5524
F76(SCR)	5526
F77(SCR)	5527
F78L05AC	977
F78L05AV	977
F78L06	988
F78L06AC	988
F78L06C	988
F78L62AC	988
F78L62WV	988
F78(SCR)	5501
F79(SCR)	5502
F80(SCR)	5504
F81(SCR)	5506
F82(SCR)	5507
F83(SCR)	5508
F84A(SCR)	5541
F84(SCR)	5541
F85A(SCR)	5542
F85(SCR)	5542
F86A(SCR)	5543
F86(SCR)	5543
F87A(SCR)	5544
F87(SCR)	5544
F88-9779F	736
F88A(SCR)	5545
F88(SCR)	5545
F89A(SCR)	5546
F89(SCR)	5546
F96N	108
F98(SCR)	5523
F99(SCR)	5525
F100(SCR)	5483
F101(SCR)	5401
F102A(SCR)	5402
F102(SCR)	5402
F103(SCR)	5403
F104(SCR)	5404
F105(SCR)	5405
F106(SCR)	5405
F107(SCR)	5405
F108(SCR)	5405
F109(SCR)	5406
F110(SCR)	5406
F114E	506
F121-433804	123A
F131(SCR)	5540
F132(SCR)	5541
F133(SCR)	5542
F134(SCR)	5543
F135(SCR)	5543
F136	109
F136(SCR)	5544
F137(SCR)	5545
F138(SCR)	5546
F139(SCR)	5528
F140(SCR)	5500
F141(SCR)	5501
F142(SCR)	5502
F143(SCR)	5503
F144(SCR)	5504
F145(SCR)	5505
F146(SCR)	5506
F147(SCR)	5507
F148(SCR)	5508
F149(SCR)	5529
F161-249-1001	949
F200(SCR)	5486
F201(SCR)	5487
F205(SCR)	5508
F206(SCR)	5529
F207(SCR)	5530
F208(SCR)	5531
F209	159
F210A(SCR)	5546
F210(SCR)	5546
F211	5547
F211A	5547
F211A(SCR)	5547
F211(SCR)	5547
F215-1001	108
F215-1002	108
F215-1003	108
F215-1004	108
F215-1005	108
F215-1006	102A
F215-1007	102A
F215-1008	102A
F215-1009	102A
F215-1010	109
F215-1012	109
F215-1013	109
F215-1014	109
F215-1016	116

To Be Replaced	ECG Replacement
F215-1017	116
F215(SCR)	5528
F216(SCR)	5529
F217(SCR)	5546
F218(SCR)	5547
F221(SCR)	5480
F222	123A
F222(SCR)	5481
F223(SCR)	5482
F224(SCR)	5483
F225(SCR)	5483
F226(SCR)	5484
F227(SCR)	5485
F228(SCR)	5486
F229(SCR)	5403
F230(SCR)	5520
F231(SCR)	5521
F232(SCR)	5522
F233(SCR)	5523
F234(SCR)	5524
F235(SCR)	5525
F236(SCR)	5526
F237(SCR)	5527
F238(SCR)	5540
F239(SCR)	5541
F240(SCR)	5542
F241(SCR)	5543
F242(SCR)	5543
F243(SCR)	5544
F244(SCR)	5544
F245(SCR)	5545
F248	314
F248A	314
F250(SCR)	5480
F251(SCR)	5481
F252(SCR)	5482
F253(SCR)	5483
F254(SCR)	5483
F255(SCR)	5484
F256(SCR)	5484
F257(SCR)	5485
F258(SCR)	5485
F259(SCR)	5486
F260(SCR)	5480
F261(SCR)	5481
F262(SCR)	5482
F263(SCR)	5483
F264(SCR)	5483
F265(SCR)	5484
F266	5484
F266(SCR)	5484
F267	5485
F267(SCR)	5485
F268	5485
F268(SCR)	5485
F269(SCR)	5486
F280(SCR)	5520
F281(SCR)	5521
F282(SCR)	5522
F283(SCR)	5523
F284(SCR)	5524
F285(SCR)	5525
F286(SCR)	5526
F287(SCR)	5527
F288(SCR)	5527
F289(SCR)	5528
F290(SCR)	5540
F291(SCR)	5541
F292(SCR)	5542
F293(SCR)	5543
F294(SCR)	5543
F295(SCR)	5544
F296(SCR)	5544
F297(SCR)	5545
F298(SCR)	5545
F299(SCR)	5546
F302-1	123A
F302-2	123A
F302-1532	123A
F302-2532	123A
F306-001	123A
F306-022	123A
F318-1	128
F321A(SCR)	5480
F322A(SCR)	5481
F323A(SCR)	5482
F324A(SCR)	5483
F325A(SCR)	5483
F326A(SCR)	5484
F327A(SCR)	5484
F328A(SCR)	5485
F329A(SCR)	5486
F330A(SCR)	5487
F366	123A
F380(SCR)	5491
F381(SCR)	5491
F382A(SCR)	5492
F382(SCR)	5492
F383A(SCR)	5494
F383(SCR)	5494
F384A(SCR)	5494
F384(SCR)	5494
F385A(SCR)	5496
F385(SCR)	5496
F386(SCR)	5496
F388A(SCR)	5547
F388(SCR)	5547
F431(SCR)	5528
F432(SCR)	5529
F433(SCR)	5530
F434(SCR)	5531
F438(SCR)	5530
F439(SCR)	5531
F442-41	725
F501	161

To Be Replaced	ECG Replacement
F501-16	161
F501(SCR)	5504
F501(ZENITH)	161
F502	161
F502(SCR)	5506
F502(ZENITH)	161
F503(SCR)	5507
F504(SCR)	5508
F505(SCR)	5501
F506(SCR)	5502
F507(SCR)	5504
F508(SCR)	5506
F509(SCR)	5507
F521(SCR)	5401
F522(SCR)	5402
F523	161
F523(SCR)	5404
F524(SCR)	5405
F525(SCR)	5405
F526(SCR)	5406
F527(SCR)	5406
F531	123A
F545(SCR)	5482
F546(SCR)	5483
F547(SCR)	5486
F549-1	159
F567	5492
F572-1	123A
F572(SCR)	5404
F587	123A
F609	5514
F610(Rectifier)	5515
F610(Varactor)	614
F611	5515
F613(SCR)	5504
F614(SCR)	5506
F615(SCR)	5507
F616(SCR)	5508
F618(SCR)	5543
F619(SCR)	5544
F620(SCR)	5545
F623	5517
F624	5518
F625	5518
F625-1	128
F627	5543
F628	5544
F629	5545
F630	5546
F631	5547
F656(GAK)	5401
F656(SCR)	5402
F657(GAK)	5402
F657(SCR)	5402
F658(GAK)	5404
F658(SCR)	5404
F659(GAK)	5405
F664S	5402
F665(SCR)	5481
F666(SCR)	5482
F667(SCR)	5483
F668(SCR)	5485
F674S	5402
F676S	5402
F699	159
F752(SCR)	5524
F753(SCR)	5526
F754(SCR)	5527
F755(SCR)	5528
F756(SCR)	5529
F757PC	722
F767PC	722
F903B-10	5312
F903B-10/20	166
F903B-11	5312
F903B-11/21	166
F903B-12	5313
F903B-12/22	167
F903B-14	5314
F903B-14/24	168
F903B-16	5315
F903B-16/26	169
F903B-18	5316
F903B-18/28	170
F903B-20	5312
F903B-21	5312
F903B-22	5313
F903B-24	5314
F903B-26	5315
F903B-28	5316
F903B-100/200	170
F941(SCR)	5454
F942(SCR)	5455
F944(GAK)	5402
F945(GAK)	5404
F946(KAG)	5402
F947(KAG)	5404
F948(KAG)	5405
F949(KAG)	5405
F1035	326
F1035(HEP)	326
F1036	460
F1089(SCR)	5483
F1090(SCR)	5484
F1091(SCR)	5485
F1092(SCR)	5486
F1094	5472
F1095	5473
F1096	5474
F1097	5475
F1099	5454
F1099(SCR)	5454
F1100	5455
F1100(SCR)	5455
F1110(GAK)	5401

To Be Replaced	ECG Replacement
F1110(SCR)	5401
F1111(GAK)	5402
F1112(GAK)	5404
F1112(SCR)	5404
F1113(GAK)	5405
F1114(GAK)	5405
F1139	5456
F1139(SCR)	5456
F1140	5457
F1140(SCR)	5457
F1168	230
F1168A	230
F1169	5402
F1170	5404
F1171	5405
F1172	5405
F1177(SCR)	5402
F1178(SCR)	5404
F1179	5530
F1180	5531
F1271	5400
F1422	230
F1422A	230
F1422B	230
F1422C	230
F1422D	230
F1462	132
F1463	132
F1826-0044	725
F2004	454
F2004(HEP)	221
F2005	220
F2005(HEP)	220
F2007(HEP)	222
F2427	108
F2443	123A
F2448	123A
F2450	108
F2560-1	729
F2584	123A
F2633	108
F2634	108
F2636	108
F3519	123A
F3530	108
F3532	123A
F3535	161
F3549	129
F3559	159
F3560	128
F3561	128
F3565	128
F3569	123A
F3570	159
F3571	123A
F3574	161
F3589	128
F3590	159
F3597	159
F4000PC	4000
F4001PC	4001B
F4002PC	4002B
F4006	4006B
F4006B	4006B
F4006BPC	4006B
F4008	4008B
F4008B	4008B
F4008BPC	4008B
F4011	4011B
F4011PC	4011B
F4012PC	4012B
F4013PC	4013B
F4014PC	4014B
F4015PC	4015B
F4016PC	4016B
F4017PC	4017B
F4018	4018B
F4018B	4018B
F4018BPC	4018B
F4019PC	4019B
F4020PC	4020B
F4021PC	4021B
F4022	4022B
F4022B	4022B
F4022BPC	4022B
F4023PC	4023B
F4024PC	4024B
F4025PC	4025B
F4027PC	4027B
F4028PC	4028B
F4029	4029B
F4029PC	4029B
F4030PC	4030B
F4034	4034B
F4034B	4034B
F4034BPC	4034B
F4035	4035B
F4035B	4035B
F4035BPC	4035B
F4040PC	4040B
F4042PC	4042B
F4043	4043B
F4043B	4043B
F4043BPC	4043B
F4044	4044B
F4044B	4044B
F4044BPC	4044B
F4046	980
F4049PC	4049B
F4050PC	4050B
F4051PC	4051B
F4053B	4053B
F4053BPC	4053B
F4055PC	4055B
F4066	4066B

To Be Replaced	ECG Replacement
F4066B	4066B
F4066BPC	4066B
F4068PC	4068B
F4069PC	4069
F4071PC	4071B
F4072	4072B
F4072B	4072B
F4072BPC	4072B
F4073	4073B
F4073B	4073B
F4073BPC	4073B
F4075	4075B
F4075B	4075B
F4075BPC	4075B
F4076	4076B
F4076B	4076B
F4076BPC	4076B
F4077PC	4077B
F4078PC	4078B
F4081PC	4081B
F4082	4082B
F4082B	4082B
F4082BPC	4082B
F4085PC	4085B
F4086PC	4086B
F4099PC	4099B
F4117-1	949
F4470-13	128
F4510	4510B
F4510B	4510B
F4510BPC	4510B
F4511	4511B
F4511BPC	4511B
F4512PC	4512B
F4514	4514B
F4514B	4514B
F4514BPC	4514B
F4515	4515B
F4515B	4515B
F4515BPC	4515B
F4516	4516B
F4516B	4516B
F4516BPC	4516B
F4518PC	4518B
F4520PC	4520B
F4522PC	4522B
F4527PC	4527B
F4539PC	4539B
F4555PC	4555B
F4556B	4556B
F4583	40100B
F4583B	40100B
F4583BPC	40100B
F4706	108
F4709	128
F4846-1	949
F7474PC	7474
F8114	5527
F-9003DC	7410
F9003DC	7410
F-9311	74154
F9311	74154
F9316PC	74161
F9600	123A
F9623	123A
F9623(G.E.)	108
F9625	108
F10124	116
F10148	116
F10180	116
F11034	125
F15810	108
F15835	108
F15840	123A
F15840-1	123A
F15841	108
F20303	109
F21490	159
F40182	40182B
F40182B	40182B
F73216	160
F75116	123A
F93150PM	74150
F136555	725
F889779F	736
FA-1(Diode)	109
FA-1(IC)	1236
FA-1(Sears)	123A
FA-1(Transistor)	175
FA-2	614
FA4	116
FA6	116
FA8	125
FA111	177
FA-6008T	1041
FA8005	141A
FA8006	141A
FA8007	141A
FA8008	141A
FA8009	145A
FA8010	145A
FA8011	145A
FA8012	145A
FB05	166
FB100	166
FB-200	168
FB200	168
FB400	168
FB401	160
FB402	160
FB403	160
FB420	102A
FB421	102A
FB440	160
FB600	169

To Be Replaced	ECG Replacement
FB800	170
FB1000	170
FB1043	109
FB6853	123A
FBC237	123A
FBN-2N1183	176
FBN-35469	175
FBN-35903	175
FBN-36220	130
FBN-36485	130
FBN-36486	175
FBN-36488	175
FBN-36603	130
FBN-36972	181
FBN-36973	181
FBN-37605	124
FBN-38021	124
FBN-38022	181
FBN-38982	124
FBN-CP2293	102
FBN-CP34634	128
FBN-CP34759	176
FBN-L108	124
FBN-L109	128
FBN-L113	128
FBN-L115	128
FBN-L148	128
FBP-00-024	5547
FBT-00-015	912
FBTX070	128
FC-52	614
FC52	614
FC55	611
FC56	612
FC57	612
FC74LS93	74LS93
FC81	613
FC82	610
FC5006	108
FCD0003PC	177
FCD0014NCS	177
FCD0070ANC	614
FCD810	3040
FCD810A	3040
FCD820	3040
FCD820A	3040
FCD820B	3040
FCD831	3040
FCD831A	3040
FCD831B	3040
FCD836	3040
FCS1168E	108
FCS1168E641	108
FCS1168F813	123A
FCS1168G	123A
FCS1168G704	123A
FCS1170F	159
FCS1225E	108
FCS1227E	108
FCS1227E814	108
FCS1227F	108
FCS1227F743	108
FCS1227G	108
FCS1227G810	108
FCS1229	128
FCS1229F	123A
FCS1229G	123A
FCS1676BL	128
FCS1677LC	129
FCS1795D	129
FCS8050C	289
FCS8550	290
FCS8550C	290
FCS9011E	123A
FCS9011F	123A
FCS9011G	123A
FCS9011H	123A
FCS9012	159
FCS-9012F	159
FCS9012F	298
FCS9012G	159
FCS-9012G	159
FCS9012H	159
FCS9012HE	159
FCS9012HG	159
FCS-9012-HH	159
FCS9013	123A
FCS-9013F	128
FCS9013F	128
FCS-9013G	128
FCS9013G	128
FCS9013H	123A
FCS9013HG	123A
FCS9013HH	123A
FCS9014	108
FCS9014B	128
FCS9014C	123A
FCS9014D	108
FCS9015	159
FCS9015B	159
FCS9015C	159
FCS9015D	159
FCS9016	229
FCS9016D	229
FCS9016E	229
FCS9016F	229
FCS9016G	229
FCS-9016G	229
FCS9016G	229
FCS9018	108
FCS9018D	108
FCS9018E	108
FCS9018F	108
FCS9018G	108
FCS9018H	108

To Be Replaced	ECG Replacement
FCS9066	108
FD01880	519
FD06193	519
FD3	116
FD6	116
FD100	177
FD111	519
FD200	177
FD222	177
FD333	116
FD444	177
FD600	519
FD777	519
FD-1029-BG	102
FD-1029-DF	116
FD-1029-DG	116
FD-1029-EE	102
FD1029EE	102
FD-1029ET	121
FD-1029-ET	121
FD-1029-FY	128
FD-1029-GE	128
FD-1029-GM	128
FD-1029-GP	519
FD-1029-HA	5070A
FD-1029-JA	123A
FD-1029-JB	298
FD-1029-JE	5882
FD-1029-JN	128
FD-1029-JP	159
FD-1029-LL	123A
FD-1029-LU	280
FD-1029-LW	281
FD-1029-MB	129
FD-1029-MC	177
FD-1029-ML	129
FD-1029-MM	128
FD-1029-NG	123A
FD-1029-NS	192
FD-1029-PA	128
FD-1029-PB	286
FD-1029-PP	123A
FD-1029-PT	123A
FD-1029-RB	129
FD-1073-AP	716
FD-1073-BF	7400
FD-1073-BG	7402
FD-1073-BH	7403
FD-1073-BJ	7404
FD-1073-BK	7406
FD-1073-BL	7407
FD-1073-BM	7408
FD-1073-BN	7410
FD-1073-BP	7413
FD-1073-BR	7420
FD-1073-BS	7430
FD-1073-BT	7437
FD-1073-BU	7440
FD-1073-BW	7451
FD-1073-BY	7454
FD-1073-CA	7486
FD-1073-CB	7442
FD-1073-CD	7474
FD-1073-CE	7475
FD-1073-CF	7476
FD-1073-CH	7496
FD-1073-CJ	74121
FD-1073-CK	74123
FD-1073-CL	74151
FD-1073-CM	74153
FD-1073-CN	74154
FD-1073-CR	7490
FD-1073-CW	7489
FD-1073-DA	7425
FD-1073-DB	7432
FD-1073-DC	7485
FD-1073-DE	74150
FD-1073-DF	74155
FD-1073-DH	74160
FD-1073-DJ	74161
FD-1073-DK	74163
FD-1073-DL	74175
FD-1073-DM	74177
FD-1073-DP	74180
FD-1073-DR	74191
FD-1073-EB	7426
FD-1073-EE	74126
FD-1073-EF	778
FD-1073-FB	74174
FD-1079-AE	4001B
FD-1079-AF	4002B
FD-1079-AG	4007B
FD-1079-AH	4011B
FD-1079-AJ	4012B
FD-1079-AK	4013B
FD-1079-AL	4016B
FD-1079-AM	4017B
FD-1079-AP	4023B
FD-1079-AR	4028B
FD-1079-AS	4042B
FD-1079-AT	4049B
FD-1079-AU	4050B
FD-1079-BB	4051B
FD-1079-BL	4555B
FD-1079-BN	4021B
FD-1079-BU	4020B
FD-1080-AA	74S00
FD-1080-AB	74S04
FD-1080-AC	74S11
FD-1080-AD	74S20
FD-1080-AE	74S40
FD-1080-AF	74S51
FD-1080-AG	74S74
FD-1080-AH	74S112
FD-1080-AJ	74S138

To Be Replaced	ECG Replacement
FD-1080-AK	74S140
FD-1080-AL	74S151
FD-1080-AN	74S02
FD-1080-AR	74S05
FD-1080-AY	74S08
FD-1080-BA	74S10
FD-1080-BD	74S64
FD-1080-BE	74S153
FD-1080-BF	74S157
FD-1080-BH	74S174
FD-1080-BJ	74S175
FD-1080-BK	74S194
FD-1080-BT	74S86
FD1599	116
FD1708	177
FD1843	177
FD1980	109
FD3389	116
FD3405	507
FD-4500-11	124
FD4500AL	181
FD6451	177
FD6489	177
FDH-9	177
FDH400	116
FDH444	177
FDH600	506
FDH694	177
FDH900	177
FDH6229	177
FE0654B	451
FE100	133
FE100A	133
FE102	133
FE102A	133
FE104A	133
FE400	133
FE402	133
FE402A	133
FE404A	133
FE654C	457
FE3819	457
FE4302	457
FEL2113	709
FF274	715
FF400	133
FFC-4030	754
FG-2N	506
FG-2NA	116
FG-2Na	506
FG2PC	506
FG79	199
FG-12377	177
FGM03-4	500A
FH100	112
FH70401E	748
FI100	464
FI-1007	159
FI-1008	159
FI-1019	106
FI-1021	234
FI 1023	107
FJH101	7430
FJH111	7420
FJH121	7410
FJH131	7400
FJH141	7440
FJH151	7450
FJH161	7451
FJH171	7453
FJH181	7454
FJH191	7480
FJH201	7482
FJH211	7483
FJH221	7402
FJH231	7401
FJH241	7404
FJH251	7405
FJH261	7442
FJH291	7403
FJH301	7426
FJH311	7401
FJH321	7405
FJJ101	7470
FJJ111	7472
FJJ121	7473
FJJ131	7474
FJJ141	7490
FJJ152	7492
FJJ181	7475
FJJ191	7476
FJJ211	7493A
FJJ261	74107
FJK101	74121
FJL101	7441
FJY101	7460
FK914	108
FK918	108
FK2369A	108
FK2484	108
FK2894	106
FK3014	108
FK3299	108
FK3300	108
FL274	712
FLH101	7400
FLH111	7410
FLH121	7420
FLH131	7430
FLH141	7440
FLH151	7450
FLH161	7451
FLH171	7453
FLH181	7454
FLH191	7402

To Be Replaced	ECG Replacement
FLH201	7401
FLH211	7404
FLH221	7480
FLH231	7482
FLH241	7483
FLH271	7405
FLH281	7442
FLH291	7403
FLH291U	7426
FLH341	7486
FLH351	7413
FLH361	7443
FLH371	7444
FLH381	7408
FLH391	7409
FLH401	74181
FLH411	74182
FLH421	74180
FLH431	7485
FLH441	74H87
FLH451	74H183
FLH481	7406
FLH481T	7416
FLH491	7407
FLH491T	7417
FLH501	7412
FLH511	7423
FLH521	7425
FLH531	7437
FLH541	7438
FLH551	7448
FLH581	7411
FLH601	74132
FLH611	7422
FLH621	7427
FLH631	7432
FLH661	7428
FLJ101	7470
FLJ111	7472
FLJ121	7473
FLJ131	7476
FLJ141	7474
FLJ151	7475
FLJ161	7490
FLJ171	7492
FLJ181	7493A
FLJ191	7495
FLJ201	74190
FLJ211	74191
FLJ221	7491
FLJ231	7494
FLJ241	74192
FLJ251	74193
FLJ261	7496
FLJ271	74107
FLJ311	74198
FLJ321	74199
FLJ331	7497
FLJ341	74110
FLJ351	74111
FLJ381	74196
FLJ391	74197
FLJ401	74160
FLJ411	74161
FLJ421	74162
FLJ431	74163
FLJ441	74164
FLJ451	74165
FLJ461	74166
FLJ531	74174
FLJ541	74175
FLJ561	74195
FLK101	74121
FLK111	74122
FLK121	74123
FLL101	74141
FLL111	7445
FLL111T	74145
FLL121	7446
FLL121T	7447
FLL121U	7446
FLL121V	7447
FLQ101	7489
FLQ111	7481
FLQ121	7484
FLQ131	74170
FLV150	3020
FLY101	7460
FLY111	74150
FLY121	74151
FLY131	74153
FLY141	74154
FLY151	74155
FLY161	74156
FM1-0001	221
FM1-0002	229
FM1-0003	123AP
FM1-0004	123AP
FM1-0005	123AP
FM1-0006	123AP
FM1-0007	123AP
FM1-0008	123AP
FM1-0009	123AP
FM1-0010	123AP
FM1-0011	107
FM1-0012	123AP
FM1-0013	123AP
FM1-0014	123AP
FM1-0015	123AP
FM1-0016	123AP
FM1-0019	297
FM1-0020	298
FM1-0230	123AP
FM1-0231	123AP
FM1-0232	123AP

To Be Replaced	ECG Replacement
FM1-0233	123AP
FM1-0234	123AP
FM1-0235	123AP
FM1-0236	123AP
FM1-0237	278
FM1-0238	278
FM1-0239	297
FM1-0240	107
FM1-0241	123A
FM1-0242	123AP
FM1-0243	177
FM1-0244	177
FM1-0247	139A
FM1-0249	116
FM1-0250	1016
FM1J2	116
FM708	108
FM709	108
FM720A	108
FM870	108
FM871	108
FM910	108
FM911	108
FM914	108
FM1613	108
FM1711	108
FM1893	154
FM2368	108
FM2369	108
FM2846	108
FM2894	106
FM3014	108
FMPS5551M	287
FMPSA20	123A
FMT5108	316
FND807	3080
FND6710	3074
FND6730	3076
FND6740	3075
FND6750	3077
FO5	116
FP-2	HiDiv-1
FP-3	HiDiv-2
FPE100	3028
FPE8050	293
FPE8550	294
FPL92328	9923
FPR40-1001	123A
FPR40-1003	108
FPR40-1004	102A
FPR40-1005	102A
FPR40-1006	109
FPR50-1001	123A
FPR50-1002	123A
FPR50-1003	108
FPR50-1004	108
FPR50-1005	102A
FPR50-1006	102A
FPR50-1011	116
FPT400	3036
FPT570	3036
FQ01C	5683
FQ01D	5684
FQ01E	5685
FQO1C	5683
FQO1D	5684
FQO1E	5685
FR01C	5683
FR01D	5684
FR01E	5685
FR-1	116
FR-1H	116
FR-1H(M)	116
FR-1M	116
FR1M	116
FR1MB	116
FR-1MD	116
FR-1N	116
FR-1P	116
FR-1U	116
FR-2	116
FR2	116
FR2-02	116
FR2-02C	116
FR2-06	125
FR2-0Z	116
FR2-O2	116
FR2P	116
FR-2P	116
FR2(S1B1)	116
FR-10	125
FR-202	116
FR202	116
FR-1033	118
FRB-564	175
FRH-101	116
FRH101	116
FRO1C	5683
FRO1D	5684
FRO1E	5685
FRS3693	229
FS03C	5673
FS03D	5675
FS03E	5675
FS06B	5632
FS06C	5633
FS06D	5634
FS06E	5635
FS12C	5633
FS12E	5635
FS19	109
FS102	5402
FS152	5403
FS202	5404
FS302	5405

To Be Replaced	ECG Replacement
FS402	5405
FS503PA	6158
FS503RA	6158
FS503VA	6158
FS703PA	6158
FS703RA	6158
FS703VA	6158
FS1221	123A
FS1308	107
FS1331	128
FS1682	161
FS1948-008	159
FS1974	123A
FS1978	195A
FS1978(RF Power)	195A
FS1990	234
FS2003-1	130
FS2299	160
FS3266	108
FS3683	108
FS24226	159
FS24954	159
FS27233	128
FS35529	108
FS36999	123A
FS326690	108
FS1948008	159
FSA1169	115
FSA1177	113
FSA1178	113
FSA1202	115
FSC9014C	108
FSE1001	108
FSE3001	108
FSE4002	199
FSE5002	108
FSO3C	5673
FSO3D	5675
FSO3E	5675
FSO6B	5632
FSO6C	5633
FSO6D	5634
FSO6E	5635
FSP-1	108
FSP-42	108
FSP-42-1	108
FSP-164	108
FSP-165	108
FSP-166	108
FSP-166-1	108
FSP-215	108
FSP-242-1	108
FSP-270-1	108
FSP-288-1	116
FSP-289-1	108
FSP307566	547
FST2	116
FST3	116
FT001	128
FT002	128
FT003	128
FT004	128
FT004A	128
FT005	123A
FT006	123A
FT008	123A
FT008A	123A
FT0019H	128
FT0019M	159
FT03C	5673
FT03D	5675
FT03E	5675
FT06B	5632
FT06C	5633
FT06D	5634
FT06E	5635
FT023	123A
FT024	123A
FT025	123A
FT026	123A
FT027	128
FT052	159
FT053	123A
FT0601	222
FT0650	452
FT-1	116
FT1	177
FT1M	506
FT-1M	506
FT1N	116
FT-1P	506
FT1(Sharp)	177
FT10	125
FT12C	5633
FT12E	5635
FT14A	116
FT34C	154
FT34D	154
FT34Y	132
FT45	161
FT118	161
FT300	124
FT410	283
FT411	283
FT527	235
FT704	464
FT709	108
FT1315	108
FT1324B	108
FT1324C	108
FT1341	159
FT1702	106
FT1746	159
FT3638	159
FT3641	154

To Be Replaced	ECG Replacement
FT3643	123A
FT03C	5673
FT03D	5675
FT03E	5675
FT06B	5632
FT06C	5633
FT06D	5634
FT06E	5635
FU1K	506
FU-1M	506
FU1M	116
FU-1M	506
FU-1MA	116
FU-1N	116
FU1N	116
FU-1NA	116
FU1NA	506
FU1U	116
FU5B7709393	909
FU5B7710393	910
FU5B7740393	940
FU5B7741393	941
FU5B7749393	949
FU5D770331X	703A
FU5D770339	703A
FU5E7064393	780
FU5F7711393	911
FU5F7715393	915
FU5F7747393	947
FU5T7725393	925
FU6A7709393	909D
FU6A7710393	910D
FU6A7711393	911D
FU6A7723393	923D
FU6A7739393	725
FU6A7741393	941D
FU6A7742393	979
FU8B770339X	703A
FU9A7723393	923D
FU9A7741393	941D
FU9T7741393	941M
FU10	506
FU1741	289
FU-IM	116
FU-IM	116
FUA767PC	722
FUA905C	961
FUA7805C	960
FUA7805UC	960
FUA7806C	961
FUA7806UC	961
FUA7808C	964
FUA7808UC	964
FUA7812C	966
FUA7812UC	966
FUA7815C	968
FUA7815UC	968
FUA7824C	972
FUA7824UC	972
FUA7905UC	961
FUA7906C	963
FUA7906UC	963
FUA7912C	967
FUA7912UC	967
FUA7915C	969
FUA7915UC	969
FUA7924C	971
FUA7924UC	971
FuL914-28	9914
FuL923	9923
FUN14LH026	720
FV-1	601
FV-11	601
FV21	138A
FV-21	138A
FV22	137A
FV-22	137A
FV23	109
FV-23	109
FV-24	5070
FV914	108
FV918	108
FV-1043	610
FV-1043	610
FV1043	610
FV1106	610
FV1106A	610
FV2369A	108
FV2484	108
FV2747C	100
FV2894	106
FV3014	108
FV3299	108
FV3300	108
FW-50	166
FW100	116
FW-100	166
FW200	116
FW-200	167
FW400	116
FW-400	168
FW500	116
FW600	116
FW-600	169
FW600A	116
FW-800	170
FW-1000	170
FWB3001	167
FWB3002	167
FWB3003	168
FWB3004	168
FWB3005	169
FWB3006	169
FWD-300	168
FWD-500	169

To Be Replaced	ECG Replacement
FWL100	116
FWL200	116
FWL300	116
FWLD50	5312
FWLD100	5312
FWLD200	5313
FWLD400	5314
FWLD600	5315
FWLD800	5316
FX274	714
FZ3.6T5	134A
FZ3.6T10	134A
FZ5.1T5	135A
FZ5.1T10	135A
FZ5.6T5	136A
FZ5.6T10	136A
FZ6.2T10	137A
FZ12A	142A
FZ12T5	142A
FZ12T10	142A
FZ14T5	144A
FZ14T10	144A
FZ15A	145A
FZ15T5	145A
FZ15T10	145A
FZ27A	146A
FZ27T5	146A
FZ27T10	146A
FZ33A	147A
FZ82A	150A
FZ309B	139A
FZ901	135A
G00003A	109
G00004A	110
G00009A	109
G0001(HEP)	126
G0002	160
G0003(HEP)	160
G0004(HEP)	102A
G0005	158
G0006	102
G0007	102A
G0008	126
G0009(HEP)	126
G00-003-A	109
G00-004-A	109
G00-008-A	109
G00-009-A	109
G00-012-A	177
G00-012A	177
G00-012A	177
G00-013-8	109
G00-014-A	177
G003(HEP)	160
G004	102A
G005-036C	123A
G005-036E	123A
G008(HEP)	127
G0010	126
G0011(HEP)	101
G00-220-A	601
G00-502A	116
G00-534-A	116
G00-534-B	116
G00535	116
G00-535A	116
G00535A	116
G00-535-B	116
G00-536A	116
G00-536-A	116
G00-543-A	116
G00-551-A	116
G00-554-A	116
G00-803-A	177
G01	116
G01-012-F	140A
G01-036A	137A
G01-036-G	139A
G01-036-H	139A
G01-037-A	142A
G01-083-A	177
G01-209B	177
G01-209-B	177
G01-217-A	177
G01-406-A	613
G01-803A	177
G01-803-A	177
G01A	112
G02	116
G03-007C	184
G03-017-B	294
G03-017-C	294
G03-017-D	294
G03-404-B	129
G03-404-C	129
G03-406-C	185
G03-407-Y	159
G04-041B	107
G04-701-A	121
G04-704-A	131
G04-711-E	158
G04-711-F	158
G04-711-G	158
G04-711-H	158
G04-711L	158
G05-003-A	233
G05-003-B	233
G05-004A	108
G05-010-A	123A
G05-011-A	123A
G05-012-G	199
G05-015C	123A
G05-015-D	123A
G05-034-D	123A
G05-035-D	123A

To Be Replaced	ECG Replacement
G05-035-E	199
G05-035E	123A
G05-036B	123A
G05-036-B	199
G05-036B	199
G05-036C	123A
G05-036C	199
G05-036-C	123A
G05-036-D	123A
G05-036-D	199
G05-036D	123A
G05-036-E	123A
G05-036-E	199
G05-036E	123A
G05-036F	199
G05-037-A	229
G05-037B	123A
G05-037-B	229
G05-037-D	229
G05-050-C	107
G05-055-C	289
G05-055-D	289
G05-055-E	289
G05-061-B	199
G05-061-C	199
G05-061-D	199
G05-061E	199
G05-063-R	229
G05-064-A	123A
G05-065-A	229
G05-066-A	229
G05-066A	229
G05-406-C	187A
G05-413A	289
G05-413B	289
G05-413-B	289
G05-413B	128
G05-413C	289
G05-413-C	289
G05-413C	128
G05-413D	289
G05-413-D	289
G05-413D	128
G05-415-A	293
G05-415-B	293
G05-415-C	293
G05-416-C	186A
G05-706-D	199
G05-706-E	199
G06-061-B	199
G06-714C	186
G06-717-B	184
G06-717-C	184
G06-717-D	184
G06-723D	103A
G08-005L	133
G08-007-B	312
G08-007-B	312
G09-003-C	1103
G09-006-A	1029
G09-006-B	1029
G09-006-C	1029
G09-007-A	1103
G09-007-B	1103
G09-007-C	1103
G09-007-D	1103
G09-008-B	1087
G09-008-C	1087
G09-008-D	1087
G09-008-E	1087
G09-009-A	1006
G09-009-B	1103
G09-009-D	1103
G09-010-A	1029
G09-011-A	1038
G09-012-A	1038
G09-012-B	1038
G09-012-C	1038
G09-013-A	1058
G09-015-B	1003
G09-017-A	1087
G09-017-B	1087
G09-017-C	1087
G09-017-D	1087
G09-018-A	788
G09-028-A	801
G09-029-B	1052
G09-029-C	1103
G09-029-D	1103
G09-034-A	801
G09-036-G	1029
G01036	139A
G01036A	137A
G01036G	139A
G01209	177
G01209B	177
G01211	116
G01803	177
G01803A	177
G03007	159
G03007C	184
G03014	294
G03703C	187
G04041B	107
G05004A	108
G05015C	123A
G05035D	199
G05035E	123A
G05036	123A
G05036B	123A
G05036C	123A
G05036D	123A
G05036E	123A
G05037B	123A
G05059	123A

To Be Replaced	ECG Replacement
G05413A	128
G05413B	128
G05415	293
G05705	152
G06714C	186
G08005L	133
G09007	1103
G09007B	1103
G09009	1006
G09009A	1006
G09015	1003
G0Q-535-B	116
G1	116
G1HA	109
G2	116
G2A	116
G2BJ	116
G2-BJ	116
G3	116
G3A3	6154
G3B3	6154
G3C3	6154
G3D3	6154
G3E3	6154
G3F3	6154
G3G3	6154
G3H3	6156
G3K3	6156
G3M3	6158
G3N3	6158
G4	116
G4A3	6154
G4B3	6154
G4C3	6154
G4D3	6154
G4E3	6154
G4F3	6154
G4G3	6154
G4H3	6158
G4K3	6156
G4M3	6158
G4N1	162
G4N3	6158
G5	116
G5A3	6154
G5A7A66-2	128
G5B3	6154
G5C	109
G5C3	6154
G5D3	6154
G5E3	6154
G5F	109
G5F3	6154
G5G3	6154
G5H3	6156
G5K	109
G5K3	6156
G5M3	6158
G5.1T5	135A
G5.1T10	135A
G5.1T20	135A
G5.6T5	136A
G5.6T10	136A
G5.6T20	136A
G6	116
G7	112
G7A	112
G7D	109
G7E	109
G7F	109
G7G	109
G8	125
G9.1T5	139A
G9.1T10	139A
G9.1T20	139A
G10	125
G11	102A
G12	102A
G12T5	142A
G12T10	142A
G12T20	142A
G13	160
G14	102A
G15T10	145A
G15T20	145A
G19	121
G23-45	130
G23-46	128
G23-67	130
G23-76	223
G27T5	146A
G27T10	146A
G27T20	146A
G100	109
G100B	116
G100D	116
G100G	116
G100J	116
G100K	125
G100M	125
G106	610
G106A	610
G110A	611
G110(Transistor)	105
G110(Varactor)	611
G122	613
G122A	613
G133	614
G133A	614
G156	109
G157	109
G158	109
G159	109
G181-725-001	181
G198	109

To Be Replaced	ECG Replacement
G199	109
G200	109
G206	610
G206A	610
G210	611
G210A	611
G212	199
G222	613
G222A	613
G233	614
G233A	614
G296	116
G297	109
G306	610
G306A	610
G310	611
G310A	611
G322	613
G322A	613
G333	614
G333A	614
G406	610
G406A	610
G409	109
G410	611
G410A	611
G422	613
G422A	613
G433	614
G433A	614
G498	109
G506	610
G506A	610
G510	611
G510A	611
G522	613
G522A	613
G580	109
G606	610
G606A	610
G610	611
G610A	611
G657	116
G659	116
G700	116
G701	116
G702	116
G766	109
G769	109
G770	109
G788	109
G789	109
G790	109
G814	109
G815	109
G816	109
G820	109
G821	109
G822	109
G823	109
G824	109
G825	109
G844	109
G845	109
G846	109
G847	109
G868	109
G869	109
G1010	109
G1010A	177
G1242	116
G1288	109
G3115	311
G4090	230
G5019	113
G6000(HEP)	104
G6001(HEP)	179
G6003(HEP)	104
G6004(HEP)	105
G6005(HEP)	121
G6006(HEP)	213
G6007(HEP)	127
G6008(HEP)	127
G6009(HEP)	179
G6010(HEP)	213
G6011(HEP)	176
G6013	121
G6014(HEP)	179
G6015(HEP)	179
G6016	131
G6018(HEP)	179
G9423	229
G9600	123A
G9600(G.E.)	123A
G9623	123A
G9625	229
G9696	123A
G10119	116
G13638	159
G16506	101
G59122	113
G101079	101
G390076S1	909
G390077S1	910
G390503S1	915
G390506-S1	940
G390507S2	923D
G395967	123A
G395967-2	123A
G612994	9903
G657061	519
G657123	519
GA52829	100
GA53149	100
GA53242	100

To Be Replaced	ECG Replacement
GA53270	101
GARE	137A
GB-1	109
GBS201A	5641
GBS401A	5642
GBS3110F	5662
GBS3115F	5673
GBS3125F	5682
GBS3210F	5663
GBS3215F	5673
GBS3225F	5683
GBS3310F	5664
GBS3315F	5675
GBS3325F	5684
GBS3410F	5665
GBS3415F	5675
GBS3415P	5675
GBS3425F	5685
GBS3510F	5666
GBS3515F	5676
GBS3525F	5686
GBS3610F	5667
GBS3615P	5677
GBS3625F	5697
GC31	100
GC32	100
GC33	100
GC34	100
GC35	100
GC60	100
GC61	100
GC148	103A
GC181	100
GC182	100
GC250	102A
GC282	160
GC283	160
GC284	160
GC285	103A
GC286	103A
GC343	102A
GC360	100
GC387	160
GC388	160
GC389	160
GC408	102A
GC452	101
GC453	101
GC454	101
GC460	160
GC461	160
GC462	160
GC463	103A
GC464	102A
GC465	103A
GC466	102A
GC467	103A
GC520	102A
GC521	102A
GC532	100
GC551	102A
GC552	102A
GC578	102A
GC579	102A
GC580	102A
GC581	102A
GC588	102A
GC608	103A
GC609	103A
GC630	160
GC630A	160
GC631	160
GC639	102A
GC640	102A
GC641	121
GC680	102A
GC681	102A
GC682	102A
GC691	121
GC692	121
GC783	123
GC784	123
GC856	102A
GC864	102A
GC1003	160
GC1004	160
GC1005	160
GC1006	160
GC1007	160
GC1034	101
GC1035	101
GC1036	101
GC1081	126
GC1092	160
GC1093	160
GC1093X3	160
GC1097	102A
GC1101	102A(2)
GC1134	102A
GC1136	102A
GC1137	103A
GC1142	160
GC1143	102A
GC1144	123A
GC1145	102A
GC1146	160
GC1148	160
GC1149	160
GC1150	102A
GC1155	160
GC1159	100
GC1182	160
GC1183	102A
GC1184	102A
GC1185	103A

To Be Replaced	ECG Replacement
GC1186	102A
GC1187	102A
GC1257	102A
GC1302	100
GC1422	102A
GC1423	103A
GC1573	160
GC1615-1	128
GC1761	610
GC1763	611
GC1764	612
GC1767	613
GC4022	100
GC4045	121
GC4062	121
GC4087	121
GC4094	131
GC4097	121
GC4111	121
GC4125	121
GC4144	102A
GC4156	121
GC4213	176/411
GC4251	121
GC4267-2	121
GC5000	102A
GC5012	109
GD1E	109
GD10	109
GD1P	109
GD4E	109
GD5E	109
GD6E	109
GD8E	109
GD11E	109
GD12	116
GD12E	109
GD13E	109
GD-25	109
GD-26	109
GD-29	109
GD-30	109
GD72E/3	109
GD72E/4	109
GD72E/5	109
GD73E/4	109
GD73E/5	109
GD74E/3	109
GD74E/4	109
GD74E/5	109
GD101	519
GD102	519
GD400	109
GD401	109
GD402	109
GD403	109
GD404	109
GD405	109
GD406	109
GD409	109
GD556	109
GD663	109
GD1001	109
GD3638	177
GD3638-00	109
GD5004	109
GE-1	100
GE-1N5061	116
GE-2	102
GE-3	121
GE-4	105
GE-5	101
GE5ZD-3.3	5111A
GE5ZD-3.6	5112A
GE5ZD-3.9	5113A
GE5ZD-4.3	5114A
GE5ZD-4.7	5115A
GE5ZD-5.1	5116A
GE5ZD-5.6	5117A
GE5ZD-6.0	5118A
GE5ZD-6.2	5119A
GE5ZD-6.8	5120A
GE5ZD-7.5	5121A
GE5ZD-8.2	5122A
GE5ZD-8.7	5123A
GE5ZD-9.1	5124A
GE5ZD-10	5125A
GE5ZD-11	5126A
GE5ZD-12	5127A
GE5ZD-13	5128A
GE5ZD-14	5129A
GE5ZD-15	5130A
GE5ZD-16	5131A
GE5ZD-17	5132A
GE5ZD-18	5133A
GE5ZD-19	5134A
GE5ZD-20	5135A
GE5ZD-22	5136A
GE5ZD-24	5137A
GE5ZD-25	5138A
GE5ZD-27	5139A
GE5ZD-28	5140A
GE5ZD-30	5141A
GE5ZD-33	5142A
GE-6	101
GE-6GD1	113
GE-7	101
GE-8	103
GE-9	160
GE-9A	160
GE-10	123A
GE-10A	199
GE-11	107
GE-12	124
GE-13MP	104MP

To Be Replaced	ECG Replacement
GE-14	130
GE-15MP	130MP
GE-16	121
GE-17	123A
GE-18	128
GE-19	130
GE-20	123A
GE20	123A
GE-21	159
GE-21A	129
GE-22	159
GE-23	175
GE-24MP	175(2)
GE-25	127
GE-26	153
GE-27	171
GE-28	186
GE-29	187
GE-30	131
GE-31MP	131MP
GE-32	198
GE-33	182
GE-34	183
GE-35	162
GE36	283
GE-37	164
GE-38	165
GE-39	161
GE-40	154
GE-41	358A
GE-42	358
GE42-7	116
GE-43	155
GE43	155
GE-44	131
GE44	131
GE-45	195A
GE-46	282
GE-47	293
GE-47MP	293MP
GE-48	294
GE-49	226
GE-50	160
GE-51	160
GE-52	102A
GE-53	158
GE54	103A&158
GE55	182
GE56	183
GE57	184
GE58	185
GE59	103A
GE-60	161
GE-61	108
GE-62	199
GE-63	192
GE-64	172A
GE-65	234
GE-66	152
GE-67	193
GE-69	378
GE-72	162
GE-73	163A
GE-74	180
GE-75	181
GE-76	179
GE81	123A
GE-81	123A
GE82	159
GE-82	159
GE-83	188
GE-84	189
GE-85	199
GE86	316
GE-86	316
GE-88	192A
GE-89	193
GE90	614
GE-90	614
GE129	107
GE-130	116
GE-208	160
GE-210	123A
GE-211	123A
GE-212	199
GE-213	316
GE-214	316
GE215	235
GE216	236
GE-217	188
GE-218	189
GE-219	195A
GE-220	287
GE-221	288
GE-222	287
GE-223	288
GE-224	191
GE-232	157
GE-235	287
GE-236	299
GE-237	165
GE-238	165
GE-239	179
GE-240	213
GE-241	196
GE-243	128
GE-244	129
GE-245	160
GE-246	175
GE-247	186A
GE-248	187A
GE-249	191
GE-250	197
GE-251	198
GE-252	210

To Be Replaced	ECG Replacement
GE-253	211
GE-255	223
GE-256	225
GE-257	228
GE-258	232
GE-259	238
GE-260	277
GE-261	278
GE-262	280
GE-262MP	280MP
GE-263	281
GE-264	282
GE-265	284
GE-265MP	284MP
GE-266	285
GE-267	286
GE-268	289
GE-268MP	289MP
GE-269	290
GE-270	295
GE-271	297
GE-271MP	297MP
GE-272	298
GE-273	300
GE-273MP	300MP
GE-274	307
GE-275	302
GE-276	306
GE-277	311
GE-278	313
GE-279	315
GE-280	316
GE-281	317
GE-282	317
GE-284	320
GE-288	320
GE-296	320
GE296X	172A
GE-300	177
GE-305	173BP
GE-320	195A
GE-322	235
GE-322	235
GE-325	198
GE-329	235
GE-332	236
GE-334	294
GE-337	236
GE414	177
GE-504	116
GE-504A	116
GE505	125
GE-509	125
GE-509A	125
GE-510	156
GE-511	506
GE-512	156
GE-513	513
GE-514	519
GE-516	522
GE-517	522
GE-518	500A
GE-519	532
GE519	532
GE-520	501A
GE521	523
GE-531	125
GE-700	5513
GE-701	310
GE-702	308
GE-703	310
GE-720	1024
GE-721	1027
GE-722	1025
GE-723	1090
GE-724	1028
GE-725	1212
GE-726	1151
GE-3265	123A
GE3638	109
GE-4000	4000
GE-4001	4001B
GE-4002	4002B
GE-4011	4011B
GE-4012	4012B
GE-4013	4013B
GE-4015	4015B
GE-4016	4016B
GE-4017	4017B
GE-4019	4019B
GE-4020	4020B
GE-4021	4021B
GE-4023	4023B
GE-4024	4024B
GE-4025	4025B
GE-4027	4027B
GE-4030	4030B
GE-4040	4040B
GE-4042	4042B
GE-4049	4049B
GE-4050	4050B
GE-4051	4051B
GE-4052	4052B
GE-4055	4055B
GE-4518	4518B
GE-5004	5838
GE-5005	5839
GE-5008	5842
GE-5009	5843
GE-5013	5849
GE-5016	5854
GE-5017	5855
GE-5020	5858
GE-5021	5859
GE-5024	5862

To Be Replaced	ECG Replacement
GE-5025	5863
GE-5028	5868
GE-5029	5869
GE-5032	5874
GE-5033	5875
GE-5036	5878
GE-5037	5879
GE-5040	5882
GE-5041	5883
GE-5044	5890
GE-5045	5891
GE-5048	5944
GE-5064	5896
GE-5065	5897
GE-5068	5900
GE-5073	5905
GE-5076	5910
GE-5077	5911
GE-5096	5986
GE-5097	5987
GE-5100	5990
GE-5101	5991
GE-5104	5994
GE-5105	5995
GE-5108	6002
GE-5109	6003
GE-5128	6054
GE-5129	6055
GE-5132	6060
GE-5133	6061
GE-5136	6064
GE-5137	6065
GE-5140	6072
GE-5141	6073
GE6063	177
GE6366	116
GE-7400	7400
GE-7402	7402
GE-7404	7404
GE-7406	7406
GE-7408	7408
GE-7410	7410
GE-7413	7413
GE-7420	7420
GE-7427	7427
GE-7432	7432
GE-7441	7441
GE-7447	7447
GE-7448	7448
GE-7451	7451
GE-7473	7473
GE-7474	7474
GE-7475	7475
GE-7476	7476
GE-7485	7485
GE-7486	7486
GE-7490	7490
GE-7492	7492
GE-74123	74123
GE-74145	74145
GE-74150	74150
GE-74154	74154
GE-74192	74192
GE-74193	74193
GE-74196	74196
GE-CR1	118
GE-CR2	119
GE-CR3	120
GE-FET-1	133
GE-FET1	133
GE-FET-2	312
GE-FET-4	222
GE-FR8	HiDiv-1
GE-FR9	HiDiv-2
GE-IC2	712
GE-IC3	705A
GE-IC4	714
GE-IC5	790
GE-IC6	715
GE-IC7	720
GE-IC8	718
GE-IC9	722
GE-IC10	708
GE-IC11	709
GE-IC12	703A
GE-M100	160
GE-MR6	186
GE-X1	5483
GE-X3	5521
GE-X4	5543
GE-X5	5453
GE-X8	103
GE-X9	102A
GE-X10	6401
GE-X11	5072A
GE-X12	5673
GE-X13	6408
GE-X16	5485
GE-X16A1938	123A
GE-X17	6402
GE-X18	186
GE-X36	116
GE-X66	109
GE-ZD27	146A
GEB100	5312
GEB101	5312
GEB102	5313
GEB104	5314
GEB106	5315
GEB108	5316
GEBR-600	169
GECR-1	118
GECR-2	119
GECR-3	120
GECR-4	502

To Be Replaced	ECG Replacement
GECR-5	503
GECR-6	504
GECR-7	505
GED05B850	109
GEFR-10	HiDiv-3
GEIC-2	712
GEIC-3	705A
GEIC-4	714
GEIC-5	790
GEIC-6	715
GEIC-7	720
GEIC-8	718
GEIC-9	722
GEIC-10	708
GEIC-11	709
GEIC-13	731
GEIC-14	721
GEIC-15	723
GEIC-16	737
GEIC-17	736
GEIC-18	790
GEIC-19	725
GEIC-20	780
GEIC-21	783
GEIC-22	728
GEIC-23	729
GEIC-24	744
GEIC-25	949
GEIC-26	748
GEIC-27	804
GEIC-28	719
GEIC-29	738
GEIC-30	739
GEIC-31	740A
GEIC-32	743
GEIC-33	791
GEIC-34	799
GEIC-35	801
GEIC-36	1004
GEIC-37	1010
GEIC-38	1006
GEIC-39	1121
GEIC-40	1122
GEIC-41	1080
GEIC-42	1005
GEIC-43	1003
GEIC-44	1053
GEIC-45	1054
GEIC-46	1057
GEIC-47	1055
GEIC-48	1056
GEIC-49	1058
GEIC-50	1060
GEIC-51	1061
GEIC-52	1062
GEIC-53	1063
GEIC-54	1064
GEIC-55	1065
GEIC-56	1066
GEIC-57	1067
GEIC-58	1068
GEIC-59	1072
GEIC-60	1074
GEIC-61	1181
GEIC-62	1137
GEIC-63	1073
GEIC-64	1069
GEIC-65	1070
GEIC-66	1168
GEIC-67	1071
GEIC-68	1163
GEIC-69	1002
GEIC-70	1227
GEIC-71	1158
GEIC-72	1159
GEIC-73	1094
GEIC-74	1215
GEIC-75	1179
GEIC-76	1217
GEIC-77	1009
GEIC-79	1011
GEIC-80	1180
GEIC-81	726
GEIC-82	1188
GEIC-83	726
GEIC-84	704
GEIC-86	724
GEIC-87	1108
GEIC-88	1061
GEIC-89	710
GEIC-90	1106
GEIC-91	1104
GEIC-92	1100
GEIC-93	1102
GEIC-94	1103
GEIC-95	1101
GEIC-96	1004
GEIC-97	749
GEIC-98	1080
GEIC-99	1109
GEIC-101	1105
GEIC-102	1022
GEIC-103	1087
GEIC-104	1085
GEIC-105	1128
GEIC-106	1134
GEIC-107	1133
GEIC-109	1131
GEIC-110	1132
GEIC-111	1130
GEIC114	1236
GEIC-115	748
GEIC-116	1047
GEIC-118	1046
GEIC-119	1124

To Be Replaced	ECG Replacement
GEIC-120	1089*
GEIC-121	1049
GEIC-122	1048
GEIC-123	1050
GEIC-124	1077
GEIC-125	1076
GEIC-126	1091*
GEIC-127	1084
GEIC-128	1142
GEIC-130	1092
GEIC-131	1051
GEIC-132	1079
GEIC-133	1050
GEIC-135	1052
GEIC-136	1078
GEIC-137	1184
GEIC-138	1140
GEIC-139	1185
GEIC-140	1082
GEIC-142	1086
GEIC-143	1061
GEIC-147	712
GEIC-148	712
GEIC-149	1004
GEIC-150	1213
GEIC-153	1229
GEIC154	1237
GEIC-155	801
GEIC-156	1122
GEIC-157	1094
GEIC-158	1121
GEIC-159	1039
GEIC-160	1041
GEIC-162	1029
GEIC-163	1030
GEIC-164	1032
GEIC-165	1033
GEIC-166	1034
GEIC-167	1035
GEIC-168	1036
GEIC-169	1043
GEIC-170	1037
GEIC-171	1087
GEIC-172	912
GEIC-173	975
GEIC-175	1186
GEIC-176	1187
GEIC-178	1205
GEIC-179	1155
GEIC-180	901
GEIC-182	1153
GEIC-183	748
GEIC-184	1062
GEIC-185	909
GEIC-190	960
GEIC-191	964
GEIC-194	7401
GEIC-196	1160
GEIC-197	1160
GEIC-199	1172
GEIC-201	1093
GEIC-203	1230
GEIC-204	1225
GEIC-205	704
GEIC-207	711
GEIC-208	716
GEIC-209	717
GEIC-210	727
GEIC-211	734
GEIC-212	735
GEIC-213	742
GEIC-214	743
GEIC-215	744
GEIC-216	745
GEIC-217	746
GEIC-218	747
GEIC-219	750
GEIC-220	778
GEIC-221	779-1*
GEIC-222	780
GEIC-223	781
GEIC-224	782
GEIC-225	783
GEIC-226	785
GEIC-227	786
GEIC-228	787
GEIC-229	788
GEIC-230	790
GEIC-231	791
GEIC-232	795
GEIC-233	797
GEIC-234	798
GEIC-235	802
GEIC-236	784
GEIC-237	803
GEIC-238	805
GEIC-239	806
GEIC-240	807
GEIC-241	810
GEIC-242	812
GEIC-243	814
GEIC-244	815
GEIC-245	900
GEIC-246	906
GEIC-247	907
GEIC-248	908
GEIC-249	909
GEIC-250	909D
GEIC-251	910
GEIC-252	910D
GEIC-253	911
GEIC-254	911D
GEIC-255	913
GEIC-256	914
GEIC-257	916

To Be Replaced	ECG Replacement
GEIC-258	917
GEIC-259	923
GEIC-260	923D
GEIC-261	925
GEIC-262	940
GEIC-263	941
GEIC-264	941D
GEIC-265	941M
GEIC-266	946
GEIC-267	947
GEIC-268	947
GEIC-269	955M
GEIC-270	1007
GEIC-271	1008
GEIC-272	1023
GEIC-273	1031
GEIC-274	1038
GEIC-275	1083
GEIC-276	1107
GEIC-277	1114
GEIC-278	1115
GEIC-279	1116
GEIC-280	1117
GEIC-281	1123
GEIC-282	1125
GEIC-283	1129
GEIC-284	1136
GEIC-285	1149
GEIC-286	1150
GEIC-287	1154
GEIC-288	903
GEIC-289	904
GEIC-290	905
GEIC-295	1223
GEIC-296	1224
GEIC-300	1161
GEIC-301	1164
GEIC-302	1173
GEIC-303	1182
GEIC-311	1098
GEIC-312	1096
GEIC-313	1126
GEL234	717
GEL234F1	717
GEL234F2	717
GEL239F2	721
GEL277	804
GEL2111	708
GEL2111AL1	708
GEL2111F1	708
GEL2113	709
GEL2113AL1	709
GEL2113F1	709
GEL2114	790
GEL3072F1	790
GEMR-1	5874
GEMR-2	5990
GEMR-3	5545
GEMR-4	5494
GEMR-5	5455
GEMR-6	186
GEN11760	174
GER-A	102A
GER-A-D	160
GESS-2AV2	511/R-2AV2
GESS-3A3	508/R-3A3
GESS-3AT2	509/R3AT2
GESS-3DB3	510/R-3DB3
GESS-6DW4	512/R-DW4
GET103	102A
GET113	102A
GET113A	102A
GET114	102A
GET572	121
GET671	160
GET672	160
GET672A	160
GET673	160
GET691	160
GET692	160
GET693	160
GET706	123A
GET708	123A
GET871	126
GET872	126
GET873	126
GET873A	126
GET874	126
GET875	126
GET880	100
GET881	100
GET882	100
GET883	126
GET885	126
GET887	100
GET888	100
GET889	100
GET890	100
GET891	100
GET892	100
GET895	100
GET896	100
GET897	100
GET898	102
GET914	123A
GET929	128
GET930	128
GET2221	123A
GET2222	123A
GET2369	123A
GET3013	123A
GET3014	123A
GET3416	123A
GET3638	159
GET3638A	159

To Be Replaced	ECG Replacement
GET3646	123A
GET4870	6401
GET4871	6409
GET5116	160
GET5117	160
GET5172	123A
GET5305	172A
GET5306	172A
GET5307	172A
GET5308	172A
GET5308A	172A
GETO-50P	158
GEZD-3.3	5066A
GEZD-3.6	134A
GEZD-3.9	5067A
GEZD-4.3	5068A
GEZD-4.7	5069A
GEZD-5.0	135A
GEZD-5.1	135A
GEZD-5.6	136A
GEZD-6.0	5070A
GEZD-6.2	137A
GEZD-6.8	5071A
GEZD-7.5	138A
GEZD-8.2	5072A
GEZD-9.1	139A
GEZD-10	140A
GEZD-10-4	140A
GEZD-11	143A
GEZD-11.5	141A
GEZD-12	142A
GEZD-13	143A
GEZD-14	144A
GEZD-15	145A
GEZD-16	5075A
GEZD-17	5076A
GEZD-18	5077A
GEZD-19	5078A
GEZD-20	5079A
GEZD-22	5080A
GEZD-24	5081A
GEZD-25	5082A
GEZD-27	146A
GEZD-28	5083A
GEZD-30	5084A
GEZD-33	147A
GEZD-36	5085A
GEZD-39	5086A
GEZD-43	5087A
GEZD-47	5088A
GEZD-51	5089A
GEZD-55	148A
GEZD-56	5090A
GEZD-60	5091A
GEZD-62	149A
GEZD-68	5092A
GEZD-75	5093A
GEZD-82	150A
GEZD-87	5094A
GEZD-91	5095A
GEZD-100	5096A
GEZD-110	151A
GEZD-120	5097A
GEZD-130	5098A
GEZD-140	5099A
GEZD-150	5100A
GEZD-160	5101A
GEZD-170	5102A
GEZD-180	5103A
GEZD-190	5104A
GEZD-200	5105A
GF20	102
GF21	102
GF32	102
GFB7422-DP	7422
GFB7428-DP	7428
GFB7433-DP	7433
GFB7481A-DP	7481
GFB74110-DP	74110
GFB74111-DP	74111
GFB74125-DP	74125
GFB74126-DP	74126
GFB74128-DP	74128
GFB74132-DP	74132
GFT44	160
GFT45	160
GFT3008/40	102
GGE-51	160
GH3F	506
GH3H	506
GI08B	116
GI1	100
GI-1N4385	116
GI2	102
GI3	126
GI4	102
GI5	101
GI6	101
GI8	103
GI9	105
GI10	123A
GI237	125
GI-300B	116
GI-300D	116
GI411	116
GI420	116
GI2711	123A
GI2712	123A
GI2713	123A
GI2714	123A
GI2715	123A
GI2716	123A
GI2921	123A
GI2922	123A
GI2923	123A

To Be Replaced	ECG Replacement
GI2924	123A
GI3002	116
GI-3008	116
GI3638	159
GI3638A	159
GI3641	123A
GI3643	123A
GI3644	159
GI3702	159
GI3703	159
GI3704	123A
GI3705	123A
GI3706	123A
GI3707	123A
GI3708	123A
GI3709	123A
GI3710	123A
GI3711	123A
GI3793	161
GI3992-17	116
GI3992-i7	116
GI6506	101
GI-P100-D	116
GI-TVC3	120
GJ4M	116
GI7	101
GL4850	3024
GLA5.6B	136A
GLA39	134A
GLA39A	134A
GLA39B	5067A
GLA43B	5068A
GLA47	135A
GLA47A	135A
GLA47B	5069A
GLA51	135A
GLA51A	135A
GLA51B	135A
GLA56	136A
GLA56A	136A
GLA56B	136A
GLA62	137A
GLA62A	137A
GLA62B	137A
GLA68B	5071A
GLA75A	138A
GLA82B	5072A
GLA91	139A
GLA91A	139A
GLA91B	139A
GLA100	140A
GLA100A	140A
GLA100B	140A
GM0290	160
GM0375	160
GM0376	160
GM0377	160
GM0378	168
GM0380	108
GM-1	156
GM-1A	156
GM-1B	156
GM1J2	125
GM-1Z	156
GM3	156
GM-3	156
GM-3A	156
GM-3B	156
GM3Y	156
GM-3Y	156
GM3Z	156
GM-3Z	156
GM290	160
GM290A	160
GM308	161
GM378	160
GM378A	160
GM378Red	160
GM380	126
GM428	121
GM656A	160
GM760	159
GM770	107
GM875	160
GM876	160
GM877	160
GM878	160
GM878A	160
GM878B	160
GMB74LS00-DC	74LS00
GMB74LS02-DC	74LS02
GMB74LS03-DC	74LS03
GMB74LS04-DC	74LS04
GMB74LS05-DC	74LS05
GMB74LS08-DC	74LS08
GMB74LS10-DC	74LS10
GMB74LS11-DC	74LS11
GMB74LS14-DC	74LS14
GMB74LS20-DC	74LS20
GMB74LS27-DC	74LS27
GMB74LS30-DC	74LS30
GMB74LS32-DC	74LS32
GMB74LS38-DC	74LS38
GMB74LS42-DC	74LS42
GMB74LS51-DC	74LS51
GMB74LS73-DC	74LS73
GMB74LS74-DC	74LS74A
GMB74LS75-DC	74LS75
GMB74LS83-DC	74LS83A
GMB74LS85-DC	74LS85
GMB74LS86-DC	74LS86
GMB74LS93-DC	74LS93
GMB74LS107-DC	74LS107
GMB74LS109-DC	74LS109A
GMB74LS123-DC	74LS123

To Be Replaced	ECG Replacement
GMB74LS136-DC	74LS136
GMB74LS138-DC	74LS138
GMB74LS151-DC	74LS151
GMB74LS153-DC	74LS153
GMB74LS157-DC	74LS157
GMB74LS161-DC	74LS161A
GMB74LS163-DC	74LS163A
GMB74LS164-DC	74LS164
GMB74LS174-DC	74LS174
GMB74LS175-DC	74LS175
GMB74LS191-DC	74LS191
GMB74LS193-DC	74LS193
GMB74LS195-DC	74LS195A
GMB74LS221-DC	74LS221
GMB74LS240-DC	74LS240
GMB74LS241-DC	74LS241
GMB74LS242-DC	74LS242
GMB74LS243-DC	74LS243
GMB74LS244-DC	74LS244
GMB74LS253-DC	74LS253
GMB74LS257-DC	74LS257
GMB74LS259-DC	74LS259
GMB74LS266-DC	74LS266
GMB74LS273-DC	74LS273
GMB74LS280-DC	74LS280
GMB74LS298-DC	74LS298
GMB74LS367-DC	74LS367
GMB74LS377-DC	74LS377
GME040-1	159
GME0404	106
GME0404-2	106
GME404-1	106
GME1001	123A
GME1002	123A
GME2001	123A
GME2002	123A
GME3001	108
GME3002	108
GME4001	123A
GME4002	123A
GME4003	123A
GME6003	123A
GME9001	108
GME9002	108
GME9021	108
GME9022	108
GMO290	160
GMO375	160
GMO376	160
GMO377	160
GMO378	160
GMO380	161
GO0535	116
GO4-703-A	176
GO5-010-A	123A
GO5-011-A	123A
GO5-015-D	128
GO1036	139A
GO1209	177
GO1211	177
GO1803	177
GO3007	159
GO3014	159
GO5036	123A
GO5059	123A
GO5415	293
GO5705	152
GO9007	1103
GO9009	1006
GO9015	1003
GOO-003-A	109
GOO-502-A	116
GP08B	116
GP-1	116
GP2-345	177
GP2-345/MA161	177
GP25	156
GP25G	156
GP139	102A
GP139A	102A
GP139B	102A
GP230	116
GP250	116
GP-256	116
GP290	176
GP-354	109
GP420	121
GP1432	121
GP1493	121
GP1494	121
GP1622	105
GP1882	121
GP2354	109
GP9023J	123A
GP9023K	123A
GPM1NA	109
GPM1NB	109
GPM2NA	109
GPT-16	121
GR102	195A
GRASS-R2982	130
GRF-3	132
GS73E/3	109
GS9014	123A
GS9014I	123A
GS9014J	123A
GS9014K	123A
GS9015	159
GS9015H	159
GS9015I	159
GS9015J	159
GS9018F	123A
GS9018G	123A
GS9018H	123A
GS9019H	287

@, * — See special notes on inside back cover.

To Be Replaced	ECG Replacement
GS9019I	287
GS9019J	287
GS9022	288
GS9022F	159
GS9022G	159
GS9022H	288
GS9022I	288
GS9022J	288
GS9023	123A
GS9023H	123A
GS9023I	123A
GS9023J	123A
gS9023K	123A
GS9023K	123A
GSM51	116
GSM52	116
GSM53	116
GSM54	116
GSM482	116
GSM483	116
GSR1	125
GT11	100
GT12	100
GT13	100
GT14	102A
GT14H	102A
GT15T5	145A
GT18	102A
GT20	102A
GT20H	102A
GT20R	102A
GT31	102A
GT32	102A
GT-32	6407
GT33	102A
GT34	102A
GT34HV	102A
GT34S	100
GT35	103A
GT-35	6408
GT40	160
GT41	102A
GT42	102A
GT43	126
GT44	102A
GT45	102A
GT46	126
GT47	126
GT66	126
GT74	102A
GT75	102A
GT81	102A
GT81HS	102A
GT81R	102A
GT82	102A
GT83	100
GT87	100
GT88	100
GT109	102A
GT109R	102A
GT122	102A
GT123	102A
GT132	102A
GT153	100
GT167	103A
GT222	102A
GT229	101
GT269	100
GT336	103A
GT364	103A
GT365	103A
GT366	103A
GT751	102A
GT758	102A
GT759	102A
GT759R	102A
GT760	102A
GT760R	102A
GT761	100
GT761R	100
GT762	100
GT762R	100
GT763	102A
GT764	100
GT766	100
GT766A	100
GT792	101
GT832	100
GT903	103A
GT904	101
GT905	101
GT905R	101
GT947	101
GT948	101
GT949	101
GT949R	101
GT1200	101
GT1202	101
GT1223	102A
GT1604	100
GT1605	100
GT1606	100
GT1607	100
GT1608	101
GT1609	101
GT1644	159
GT1658	103A
GT1665	102A
GT2693	100
GT2694	100
GT2695	100
GT2696	102A
GT2765	101
GT2766	101
GT2767	101

To Be Replaced	ECG Replacement
GT2768	103A
GT2883	102A
GT2884	101
GT2885	102A
GT2886	101
GT2887	102A
GT2888	101
GT2906	101
GT3150	101
GT5116	126
GT5117	126
GT5148	126
GT5149	126
GT5151	126
GT5153	126
GTE02-01	5542
GTE02-02	5543
GTE02-03	5544
GTE02-04	5545
GTE02-06	5547
GTE1	100
GTE2	100
GTJ33141	126
GTJ33229	126
GTJ33230	126
GTJ33231	102A
GTJ33232	102A
GTV	100
GTX2001	121
GV5760	177
GV6063	123A
GVL 20077	123A
GVL20226	519
GVL20265	519
GVL20327-1	519
GZ3.6	5173A
GZ3.9	5174A
GZ4.3	5175A
GZ4.7	5176A
GZ5.1	5177A
GZ5.6	136A
GZ6.2	137A
GZ6.8	5071A
GZ7.5	138A
GZ8.2	5122A
GZ9.1	5185A
GZ27	146A
GZ33A	5203A
H089	142A
H091	109
H1F1	125
H1V	108
H5A3	6354
H5B3	6354
H5C3	6354
H5D3	6354
H5E3	6354
H5F3	6354
H5G3	6354
H5H3	6356
H5K3	6356
H5M3	6358
H5N3	6358
H10	102A
H11A3	3040
H11A5100	3041
H12	105
H12A	105
H50	116
H100	116
H102	123A
H103A	121
H103HX	5640
H103SC	5650
H103SD	5650
H103SG	5650
H103SH	5640
H103SS	5650
H109	156
H113HX	5640
H113SC	5650
H113SD	5650
H113SG	5650
H113SH	5640
H113SS	5650
H123HX	5641
H123SC	5651
H123SD	5651
H123SG	5651
H123SH	5641
H123SS	5651
H133HX	5642
H133SC	5652
H133SD	5652
H133SG	5652
H133SH	5642
H133SS	5652
H143HX	5642
H143SC	5652
H143SD	5652
H143SG	5652
H143SH	5642
H143SS	5652
H153HX	5643
H153SH	5643
H163HX	5643
H163SH	5643
H200	116
H221(GE)	783
H300	116
H316	109
H316-1	548
H386-9	505
H386C1D2Y	505
H400	116

To Be Replaced	ECG Replacement
H402	541
H402-7	541
H442	108
H445-2	513
H484	513
H500	116
H556	548
H569	541
H585	116
H598	503
H598-10	503
H600	116
H614-9	547
H615	113
H616	116
H617	116
H618	116
H619	116
H620	116
H621	125
H623	177
H625	116
H626	116
H685	548
H685-1	548
H781	116
H783	116
H800	125
H815	506
H816	504
H843-2	548
H844-4	545
H844-10	546
H844-11	546
H844-13	546
H-881	125
H889	177
H890	507
H891	116(3)
H931	123A
H932	154
H933	123A
H934	123A
H1000	125
H1567	123A
H7126-3	116
H7337	153
H7618	188
H8287	109,110
H8287-4	109,110
H8513	177
H9423	123A
H9618	123A
H9623	123A
H9625	108
H9696	123A
HA00052	100
HA00053	100
HA-00102	100
HA-00495	159
HA-00496	185
HA-00509	290
HA-00562	290
HA00562	290
HA-00564	234
HA-00610	159
HA-00634	187
HA-00636	187
HA-00643	193
HA-00699	153
HA-00733	294
HA-0733	294
HA12	160
HA-12	100
HA15	100
HA-15	126
HA30	160
HA49	100
HA-49	126
HA50	116
HA52	126
HA53	126
HA54	102A
HA56	102A
HA70	160
HA100	116
HA-101	126
HA102	126
HA103	126
HA104	126
HA200	116
HA201	126
HA202	100
HA-234	160
HA235	126
HA235A	160
HA240	160
HA266	160
HA267	160
HA-268	160
HA-269	126
HA300	116
HA330	126
HA342	126
HA-350	126
HA-350A	126
HA-353	126
HA-353C	126
HA-354	126
HA-354B	126
HA400	116
HA471	126
HA500	116
HA505	153
HA525	160

To Be Replaced	ECG Replacement
HA600	116
HA800	125
HA1000	125
HA1040	160
HA1101	726
HA1102	726
HA1103	704
HA1104	704
HA1108	1061
HA1110	901
HA1115	720
HA1115W	720
HA1117	1122
HA1118	1094
HA1119	1121
HA1124	712
HA1124D	712
HA1124DS	712
HA1124S	712
HA1125	712
HA1125A	712
HA1126	1004
HA1126D	1004
HA1126DW	1004
HA1127	912
HA1128	712
HA1133	730
HA1137	788
HA1137P	788
HA1137W	788
HA1139	749
HA1139A	1169
HA1140	1080
HA1141	712
HA1144	1213
HA1146	1004
HA1148	1229
HA1150	801
HA1151	1237
HA1152	1080
HA1154	712
HA1156	801
HA1156-6C	801
HA1156-6F	801
HA1156-6H2	801
HA1156-6M2	801
HA1156W	801
HA1157	1122
HA1158	1094
HA1158-0	1094
HA1158-O	1094
HA1159	1121
HA1197	1214
HA1201	1039
HA1202	1041
HA-1202	1041
HA1202	1041
HA1203	1042
HA1211	1040
HA1220A	610
HA1224A	611
HA1226A	612
HA1234A	613
HA1238A	614
HA1301	903
HA1302	784
HA1304	941
HA1306	1029
HA1306P	1029
HA1306P-U	1029
HA1306U	1029
HA1306W	1029
HA1306WU	1029
HA1308	1030
HA1309	1030
HA1310	1031
HA1311	1032
HA1311W	1032
HA1312	1033
HA1312W	1033
HA1313	1034
HA1314	1035
HA1316	1036
HA1318	1038
HA1318P	1038
HA1318P-U	1038
HA1318Pu	1038
HA1318PU	1038
HA1318PU-1	1038
HA1318PU-2	1038
HA1318PU-3	1038
HA1319	1043
HA1322	1037
HA-1322	1037
HA1322A	1037
HA1322C	1037
HA1325	1238
HA1339	1169
HA-1339	1169
HA1339A	1169
HA1342	1239
HA1342A	1239
HA1350	102A
HA1360	102A
HA1366	1260
HA1366R	1261
HA1366W	1260
HA1406	1087
HA1406-2	1087
HA1406-3	1087
HA1406-4	1087
HA1752	288
HA1920A	610
HA1924A	611

To Be Replaced	ECG Replacement
HA1926A	612
HA1934A	613
HA1938A	614
HA2001	133
HA2010	133
HA2190	160
HA2356	160
HA3210	160
HA3480	160
HA3670	160
HA4400	160
HA5001	101
HA5002	101
HA5003	101
HA5005	101
HA5009	101
HA5010	103A
HA5011	101
HA5012	101
HA5014	101
HA5016	101
HA5020	101
HA5021	101
HA5022	101
HA5023	101
HA5024	101
HA5025	101
HA5026	101
HA7530	129
HA7531	129
HA7630	129
HA7631	129
HA7632	129
HA11112	1189
HA11113	1190
HA11115W	720
HA11226	2000
HA11516	1237
HA11516E	1237
HA11516E1	1237
HA11516J	1237
HA11516J4	1237
HA11580	1196
HA11580C	1196
HA17711	911D
HA17723	923D
HA17741GS	941M
HA17741M	941
HA17902P	987
HAM-1	102A
HAR10	116
HAR15	116
HAR20	116
HAW1183B	176
HAW1183C	176
HB-00054	102A
HB-00056	102A
HB-00166	102A
HB-00171	102A
HB-00172	102A
HB-00173	102A
HB-00175	102A
HB-00176	102A
HB-00178	102A
HB-00186	102A
HB-00187	102A
HB-00324	158
HB-00405	158
HB-00564	187
HB2	116
HB3	116
HB32	102A
HB33	102A
HB54	102A
HB55	102A
HB56	102A
HB75	102A
HB75C	102A
HB77	102A
HB77B	102A
HB77C	102A
HB-85	102A
HB156	102A
HB156C	102A
HB171	102A
HB172	102A
HB-172	102A
HB-173	102A
HB175	102A
HB-175	102A
HB176	102A
HB178	102A
HB186	102A
HB187	102A
HB263	102A
HB270	102A
HB324	158
HB365	158
HB367	131
HB415	158
HB422	126
HB459	102A
HB461	176
HB475	158
HB-475	158
HBF4001A	4001B
HBF4002A	4002B
HBF4008	4008B
HBF4009A	4049B
HBF4011A	4011B
HBF4012A	4012B
HBF4013A	4013B
HBF4014A	4014B
HBF4015A	4015B
HBF4016A	4016B

To Be Replaced	ECG Replacement
HBF4017A	4017B
HBF4018	4018B
HBF4019A	4019B
HBF4020A	4020B
HBF4021A	4021B
HBF4022	4022B
HBF4023A	4023B
HBF4024A	4024B
HBF4025A	4025B
HBF4027A	4027B
HBF4028A	4028B
HBF4029A	4029B
HBF4030A	4030B
HBF4035	4035B
HBF4040A	4040B
HBF4042A	4042B
HBF4049A	4049B
HBF4050A	4050B
HBF4051A	4051B
HBF4052A	4052B
HBF4063	4063B
HBF4066	4066B
HC-000381	107
HC-00176	102A
HC-00184	313
HC-00227	123A
HC-00268	128
HC-00372	123A
HC-00373	199
HC-00380	107
HC-00381	107
HC-00394	229
HC-00461	229
HC-00496	184
HC-00509	128
HC-00535	229
HC-00536	199
HC-00537	123A
HC-00668	108
HC-00693	123A
HC-00711	199
HC-00730	101
HC-00732	199
HC-00735	123A
HC-00772	108
HC-00784	107
HC-00828	123A
HC-00829	107
HC00838	123A
HC-00839	108
HC-00871	123A
HC-00900	199
HC-00920	107
HC-00921	123A
HC-00923	199
HC-00924	123A
HC-00929	199
HC-00930	199
HC00930	229
HC-00945	123A
HC-01000	199
HC-01047	107
HC-01096	186
HC-01098	186
HC-01209	128
HC-01226	186
HC-01317	128
HC-01318	128
HC-01327	199
HC-01335	199
HC-01359	107
HC-01390	123A
HC-01417	123A
HC-01449	295
HC-01674	229
HC-01675	229
HC-01820	123A
HC-01830	108
HC-2	525
HC2	525
HC-2	525
HC-8	541
HC-10	541
HC-12	548
HC-23G	601
HC30	156
HC-30	116
HC39	156
HC50	156
HC-56	123A
HC67	116
HC68	116
HC69	116
HC71	116
HC72	125
HC73	125
HC80	116
HC206	108
HC371	123A
HC372	123A
HC373	123A
HC380	107
HC381	107
HC394	107
HC454	107
HC458	123A
HC460	107
HC461	107
HC495	152
HC500	116
HC515	124
HC535	107
HC535A	107
HC535B	107
HC537	107

To Be Replaced	ECG Replacement
HC539	123A
HC545	107
HC561	123A
HC645	108
HC668	108
HC670	116
HC680	116
HC700	116
HC710	116
HC720	125
HC730	125
HC772	108
HC784	107
HC829	108
HC-1449	295
HC7084	614
HC-50102	5402
HC100603	1019
HC1000109	703A
HC1000109-0	703A
HC1000111-0	703A
HC1000114-0	726
HC1000117-0	718
HC1000217	941
HC1000217-0	941D
HC1000403	1005
HC1000417	799
HC1000503	1019
HC1000505	1085
HC1000603	1019
HC1000703	1027
HC1001001	1043
HC10001200	1170
HC10002050	1100
HC10004010	801
HC10006170	801
HC10008060	1254
HC10012030	1006
HC10022010	1192
HC10023010	1239
HC10034050	1192
HCL-29	123A
HCL-6066	123A
HCV	116
HD-00072	103A
HD-00227	123A
HD-00261	192
HD-00471	289
HD-1	116
HD10-001-01	109
HD20-003-01	116
HD74S00	74S00
HD74S00P	74S00
HD74S03	74S03
HD74S03P	74S03
HD74S04	74S04
HD74S04P	74S04
HD74S05	74S05
HD74S05P	74S05
HD74S10	74S10
HD74S10P	74S10
HD74S11	74S11
HD74S11P	74S11
HD74S15	74S15
HD74S15P	74S15
HD74S20	74S20
HD74S20P	74S20
HD74S22	74S22
HD74S22P	74S22
HD74S40	74S40
HD74S40P	74S40
HD74S64	74S64
HD74S64P	74S64
HD74S65	74S65
HD74S65P	74S65
HD74S74	74S74
HD74S74P	74S74
HD74S86	74S86
HD74S86P	74S86
HD74S112	74S112
HD74S112P	74S112
HD74S113	74S113
HD74S113P	74S113
HD74S114	74S114
HD74S114P	74S114
HD74S133	74S133
HD74S133P	74S133
HD74S134	74S134
HD74S134P	74S134
HD74S140	74S140
HD74S140P	74S140
HD74S151	74S151
HD74S151P	74S151
HD74S174	74S174
HD74S174P	74S174
HD74S175P	74S175
HD74S181	74S181
HD74S181P	74S181
HD74S251	74S251
HD74S251P	74S251
HD-187	101
HD1468	109
HD2000	116
HD2000-301	116
HD2149	109
HD2155	109
HD2201	9932
HD2201P	9932
HD2202	9933
HD2202P	9933
HD2203	9946
HD2203P	9946
HD2204	9930
HD2204P	9930
HD2205	9945

To Be Replaced	ECG Replacement
HD2205P	9945
HD2206	9936
HD2206P	9936
HD2207	9962
HD2207P	9962
HD2208	9935
HD2208P	9935
HD2209	9944
HD2209P	9944
HD2210	9099
HD2210P	9099
HD2211	9093
HD2211P	9093
HD2213	9157
HD2213P	9157
HD2214	9158
HD2214P	9158
HD2215	9962
HD2215P	9962
HD2216	9937
HD2216P	9937
HD2501	7440
HD2501P	7440
HD2502	7460
HD2502P	7460
HD2503	7400
HD2503P	7400
HD2504	7420
HD2504P	7420
HD2505	7451
HD2505P	7451
HD2506	7450
HD2506P	7450
HD2507	7410
HD2507P	7410
HD2508	7430
HD2508P	7430
HD2509	7401
HD2509P	7401
HD2510	7474
HD2510P	7474
HD2511	7402
HD2511P	7402
HD2512	7453
HD2512P	7453
HD2513	7482
HD2513P	7482
HD2514	7454
HD2514P	7454
HD2515	7473
HD2515P	7473
HD2516	7476
HD2516P	7476
HD2517	7475
HD2517P	7475
HD2518	7441
HD2518P	7441
HD2519	7490
HD2519P	7490
HD2520	7493A
HD2520P	7493A
HD2521	7492
HD2521P	7492
HD2522	7404
HD2522P	7404
HD2523	7405
HD2523P	7405
HD2524	7491
HD2524P	7491
HD2526	7486
HD2526P	7486
HD2528	7403
HD2528P	7403
HD2529	7472
HD2529P	7472
HD2530	74107
HD2530P	74107
HD2531	7445
HD2531P	7445
HD2532	7447
HD2532P	7447
HD2533	7494
HD2533P	7494
HD2534	7495
HD2534P	7495
HD2535	7483
HD2535P	7483
HD2536	7442
HD2536P	7442
HD2537	7443
HD2537P	7443
HD2538	7444
HD2538P	7444
HD2539	7470
HD2539P	7470
HD2540	74170
HD2540P	74170
HD2541	74192
HD2541P	74192
HD2542	74193
HD2542P	74193
HD2543	74121
HD2543P	74121
HD2544	7438
HD2544P	7438
HD2545	7413
HD2545P	7413
HD2546	7496
HD2546P	7496
HD2547	74181
HD2547P	74181
HD2548	74150
HD2548P	74150
HD2549	74151
HD2549P	74151

To Be Replaced	ECG Replacement
HD2550	7408
HD2550P	7408
HD2551	7409
HD2551P	7409
HD2552	7437
HD2552P	7437
HD2555	74145
HD2555P	74145
HD2558	74141
HD2558P	74141
HD2560	7426
HD2560P	7426
HD2561	74123
HD2561P	74123
HD2562	74182
HD2562P	74182
HD2563	74H183
HD2563P	74H183
HD2564	74153
HD2564P	74153
HD2572	74196
HD2572P	74196
HD2573	74197
HD2573P	74197
HD2580	74154
HD2580P	74154
HD6001	177
HD6125	177
HD6147	116
HD6865	116
HD7400	7400
HD7400P	7400
HD7401P	7401
HD7402	7402
HD7402P	7402
HD7403	7403
HD7403P	7403
HD7404	7404
HD7404P	7404
HD7405	7405
HD7405P	7405
HD7406	7406
HD7406P	7406
HD7407	7407
HD7407P	7407
HD7410	7410
HD7410P	7410
HD7412	7412
HD7412P	7412
HD7414	7414
HD7414P	7414
HD7416	7416
HD7416P	7416
HD7417	7417
HD7420	7420
HD7420P	7420
HD7422	7422
HD7426	7426
HD7426P	7426
HD7427	7427
HD7427P	7427
HD7430	7430
HD7430P	7430
HD7432	7432
HD7432P	7432
HD7440	7440
HD7440P	7440
HD7442A	7442
HD7442AP	7442
HD7443A	7443
HD7443AP	7443
HD7444A	7444
HD7444AP	7444
HD7450	7450
HD7450P	7450
HD7451	7451
HD7451P	7451
HD7453	7453
HD7453P	7453
HD7454	7454
HD7454P	7454
HD7460	7460
HD7460P	7460
HD7471P	7417
HD7472	7472
HD7472P	7472
HD7473A	7473
HD7473AP	7473
HD7473P	7473
HD7474	7474
HD7474P	7474
HD7475	7475
HD7475P	7475
HD7485	7485
HD7485P	7485
HD7486	7486
HD7486P	7486
HD7490A	7490
HD7490AP	7490
HD7492A	7492
HD7492AP	7492
HD7493A	7493A
HD7493AD	7493A
HD7493AP	7493A
HD7493P	7493A
HD7496	7496
HD7496P	7496
HD-20008	506
HD42851	1254
HD74107	74107
HD74107P	74107
HD74121	74121
HD74121P	74121
HD74125	74125
HD74125P	74125

To Be Replaced	ECG Replacement
HD74126	74126
HD74126P	74126
HD74132	74132
HD74132P	74132
HD74150	74150
HD74150P	74150
HD74151A	74151
HD74151AP	74151
HD74155	74155
HD74155P	74155
HD74156	74156
HD74156P	74156
HD74160	74160
HD74160P	74160
HD74161	74161
HD74161P	74161
HD74162	74162
HD74162P	74162
HD74163	74163
HD74163P	74163
HD74164	74164
HD74164P	74164
HD74166	74166
HD74166P	74166
HD74174	74174
HD74174P	74174
HD74175	74175
HD74175P	74175
HD74180	74180
HD74180P	74180
HD74190	74190
HD74190P	74190
HD74191	74191
HD74191P	74191
HD74198	74198
HD74198P	74198
HD74199	74199
HD74199P	74199
HD200207	116
HD200301	116
HD-1000101	109
HD1000101-0	109
HD1000105	110
HD1000105-0	110MP
HD1000301	109
HD1000302	109
HD1000303	109,110
HD1000303-0	109,110MP
HD1000309	138A
HD-2000106	177
HD2000110	116
HD2000110-0	116
HD2000206	177
HD2000301	116
HD2000301-0	116
HD2000307	116
HD-2000308	116
HD2000413	116
HD2000501	116
HD2000510	116
HD2000610	116
HD2000703	116
HD2000710	113
HD2000803	116(2)
HD2000903	116
HD2001105	177
HD2001310	116
HD3000101-0	142A
HD3000113	5074A
HD3000201-0	5084A
HD-3000301	116
HD3000309	138A
HD3000309-0	138A
HD3000401	139A
HD-3000409	138A
HD3001009	5074A
HD3001109-0	144A
HD3001809	5074A
HD3002109	144A
HD3002409	142A
HD3003109	5072A
HD3003309	5010A
HD3033090	5011A
HD4000109	109
HD4000909	614
HD10000101	109
HD10000302	109
HD10001010	109
HD10001050	109
HD20000703	116
HD20000903	116
HD20001050	177
HD20001100	116
HD20001101	116
HD20001210	519
HD20001990	116
HD20002060	601
HD20003010	116
HD20005100	156
HD20006100	116(2)
HD20007030	116
HD20007100	116(2)
HD20011050	177
HD20017090	139A
HD30000109-0	5074A
HD30001090	5074A
HD30001200	140A
HD30006060	140A
HD30007060	139A
HD30010090	5074A
HD30011090	144A
HD30017090	139A
HD30019090	138A
HD40001060	614
HD40001330	612

To Be Replaced	ECG Replacement
HD40009090	614
HE-00829	107
HE-00930	199
HE-1N34	109
HE-1N34A	109
HE-1N60	109
HE-1N60P	109
HE-1S188	109
HE-1S426	109
HE-1S446	109
HE-7	138A
HE-7A	138A
HE-1024	109
HE-10001	109
HE-10002	109
HE-10003	109
HE-10024	109
HE-10025	109
HE-10027	109
HE-10030	177
HE-10040	109
HE-10041	612
HE-10044	110
HE-10045	109
HE-20011	116
HE-20049	138A
HE-M8489	177
HE-OA90	109
HE-SD1	116
HEP-0700*	112
HEP1	126
HEP-2	160
HEP3	160
HEP50	123A
HEP51	129
HEP52	159
HEP53	123A
HEP54	123A
HEP55	123A
HEP56	108
HEP57	159
HEP-75	311
HEP101	140A
HEP102	134A
HEP103	137A
HEP104	139A
HEP105	142A
HEP134	109
HEP135	109
HEP151	5940
HEP153	5944
HEP154	116
HEP156	116
HEP157	116
HEP158	116
HEP159	125
HEP160	125
HEP161	5800
HEP162	5802
HEP165	113
HEP166	115
HEP170	125
HEP175	166
HEP176	167
HEP177	168
HEP178	169
HEP200	104
HEP230	104
HEP231	105
HEP232	121
HEP233	105
HEP234	127
HEP235	127
HEP236	179
HEP-237	213
HEP238	176
HEP240	124
HEP241	175
HEP242	129
HEP243	128
HEP244	157
HEP245	184
HEP246	185
HEP247	130
HEP-248	219
HEP250	102A
HEP251	102A
HEP252	102
HEP253	158
HEP254	158
HEP280	102A
HEP281	102A
HEP300	5470
HEP302	5472
HEP304	5501
HEP306	5504
HEP310	6400
HEP311	6407
HEP320	5400
HEP340	5663
HEP570	9917
HEP572	9976
HEP573	9989
HEP590	816
HEP591	704
HEP-594	718
HEP594	718
HEP-595	720
HEP595	720
HEP602	135A
HEP603	136A
HEP604	141A
HEP605	143A
HEP606	144A
HEP607	145A

To Be Replaced	ECG Replacement
HEP608	146A
HEP609	147A
HEP610	148A
HEP611	149A
HEP612	150A
HEP613	151A
HEP620	5515
HEP621	5515
HEP622	5446
HEP623	121
HEP624	121
HEP-625	179
HEP-626	179
HEP627	179
HEP628	121
HEP629	102
HEP630	102
HEP631	102
HEP632	102
HEP633	102
HEP634	102A
HEP635	126
HEP636	126
HEP637	160
HEP638	126
HEP639	126
HEP640	126
HEP641	101
HEP642	131
HEP643	131
HEP700	185
HEP701	184
HEP702	218
HEP703	175
HEP704	130
HEP-705	219
HEP706	154
HEP707	162
HEP708	159
HEP709	161
HEP710	129
HEP712	154
HEP713	154
HEP714	190
HEP715	159
HEP716	159
HEP717	159
HEP718	108
HEP719	161
HEP720	108
HEP721	107
HEP722	108
HEP723	108
HEP724	123A
HEP725	123A
HEP726	199
HEP727	108
HEP728	123A
HEP729	123A
HEP730	199
HEP731	107
HEP732	107
HEP733	108
HEP734	107
HEP735	123A
HEP736	128
HEP737	199
HEP738	123A
HEP739	159
HEP740	163A
HEP801	133
HEP802	132
HEP6057P	790
HEP6062P	708
HEP-7450P	7450
HEP-7451P	7451
HEP-7453P	7453
HEP-A0450	413
HEP-A0455	414
HEP-A0500	405
HEP-A0502	401
HEP-A502	401
HEP-C1030P	9930
HEP-C1032P	9932
HEP-C1033P	9933
HEP-C1035P	9935
HEP-C1036P	9936
HEP-C1044P	9944
HEP-C1045P	9945
HEP-C1046P	9946
HEP-C1052P	9099
HEP-C1053P	9093
HEP-C1057P	9157
HEP-C1058P	9158
HEP-C1062P	9962
HEP-C2003P	9917
HEP-C2005P	9989
HEP-C3000L	7400
HEP-C3000P	7400
HEP-C3001L	7401
HEP-C3001P	7401
HEP-C3002P	7402
HEP-C3004L	7404
HEP-C3004P	7404
HEP-C3010L	7410
HEP-C3010P	7410
HEP-C3020L	7420
HEP-C3020P	7420
HEP-C3030L	7430
HEP-C3030P	7430
HEP-C3040L	7440
HEP-C3040P	7440
HEP-C3041L	7441
HEP-C3041P	7441
HEP-C3050L	7450

To Be Replaced	ECG Replacement
HEP-C3050P	7450
HEP-C3073L	7473
HEP-C3073P	7473
HEP-C3075L	7475
HEP-C3075P	7475
HEP-C3800L	7490
HEP-C3800P	7490
HEP-C3801L	7492
HEP-C3801P	7492
HEP-C3806P	974
HEP-C4000P	4001B
HEP-C4001P	4011B
HEP-C4002P	4023B
HEP-C4003P	4025B
HEP-C4020P	4013B
HEP-C4021P	4027B
HEP-C4030P	4017B
HEP-C4040P	4042B
HEP-C4050P	4016B
HEP-C4055P	4556B
HEP-C6001	760
HEP-C6002	774
HEP-C6003	752
HEP-C6003P	752
HEP-C6004	771
HEP-C6007	754
HEP-C6008	769
HEP-C6009	766A
HEP-C6009P	766A
HEP-C6010	753
HEP-C6010P	753
HEP-C6011	761
HEP-C6012	762
HEP-C6013	755
HEP-C6014	756
HEP-C6015	767
HEP-C6016	796
HEP-C6017	773
HEP-C6019	754
HEP-C6050G	973
HEP-C6052G	941
HEP-C6052P	941M
HEP-C6055L	725
HEP-C6056P	722
HEP-C6057P	790
HEP-C6059P	746
HEP-C6060P	748
HEP-C6061P	750
HEP-C6062P	708
HEP-C6063P	712
HEP-C6065P	719
HEP-C6066P	798
HEP-C6067G	707
HEP-C6067P	707
HEP-C6068P	720
HEP-C6069G	780
HEP-C6069P	780
HEP-C6070P	714
HEP-C6071P	715
HEP-C6072P	739
HEP-C6073P	814
HEP-C6074P	718
HEP-C6075P	738
HEP-C6076P	749
HEP-C6077P	782
HEP-C6079P	747
HEP-C6080P	721
HEP-C6081P	779-1*
HEP-C6082P	708
HEP-C6083P	712
HEP-C6085P	731
HEP-C6089	705A
HEP-C6090	804
HEP-C6091G	816
HEP-C6094P	718
HEP-C6095P	720
HEP-C6096P	801
HEP-C6099P	795
HEP-C6100P	783
HEP-C6101P	723
HEP-C6102P	778
HEP-C6103P	909
HEP-C6105P	972
HEP-C6107P	975
HEP-C6110P	960
HEP-C6111P	962
HEP-C6113P	966
HEP-C6114P	968
HEP-C6116P	972
HEP-C6118P	961
HEP-C6120P	963
HEP-C6122P	967
HEP-C6123P	969
HEP-C6130P	955M
HEP-C6131P	978
HEP-C6132	977
HEP-C7400P	7400
HEP-C7401P	7401
HEP-C7402P	7402
HEP-C7403P	7403
HEP-C7404P	7404
HEP-C7405P	7405
HEP-C7406P	7406
HEP-C7407P	7407
HEP-C7408P	7408
HEP-C7409P	7409
HEP-C7410P	7410
HEP-C7411P	7411
HEP-C7413P	7413
HEP-C7414P	7414
HEP-C7416P	7416
HEP-C7417P	7417
HEP-C7420P	7420
HEP-C7423P	7423
HEP-C7425P	7425

To Be Replaced	ECG Replacement
HEP-C7426P	7426
HEP-C7427P	7427
HEP-C7430P	7430
HEP-C7432P	7432
HEP-C7437P	7437
HEP-C7438P	7438
HEP-C7440P	7440
HEP-C7445P	7445
HEP-C7446AP	7446
HEP-C7447AP	7447
HEP-C7448P	7448
HEP-C7454P	7454
HEP-C7460P	7460
HEP-C7470P	7470
HEP-C7472P	7472
HEP-C7473P	7473
HEP-C7474P	7474
HEP-C7475P	7475
HEP-C7483P	7483
HEP-C7485P	7485
HEP-C7486P	7486
HEP-C7490AP	7490
HEP-C7491AP	7491
HEP-C7492AP	7492
HEP-C7493AP	7493A
HEP-C7495P	7495
HEP-C7496P	7496
HEP-C74107P	74107
HEP-C74121P	74121
HEP-C74123P	74123
HEP-C74125P	74125
HEP-C74141P	74141
HEP-C74145P	74145
HEP-C74150P	74150
HEP-C74151AP	74151
HEP-C74153P	74153
HEP-C74154P	74154
HEP-C74155P	74155
HEP-C74156P	74156
HEP-C74160AP	74160
HEP-C74161AP	74161
HEP-C74162AP	74162
HEP-C74163AP	74163
HEP-C74164P	74164
HEP-C74165P	74165
HEP-C74166P	74166
HEP-C74170P	74170
HEP-C74174P	74174
HEP-C74175P	74175
HEP-C74176P	74176
HEP-C74177P	74177
HEP-C74180P	74180
HEP-C74181P	74181
HEP-C74182P	74182
HEP-C74190P	74190
HEP-C74191P	74191
HEP-C74192P	74192
HEP-C74193P	74193
HEP-C74195P	74195
HEP-C74196P	74196
HEP-C74197P	74197
HEP-C74198P	74198
HEP-C74199P	74199
HEP-F0010	133
HEP-F0015	132
HEP-F0021	312
HEP-F1035	326
HEP-F2004	221
HEP-F2005	220
HEP-F2007	222
HEP-G0001	126
HEP-G0002	160
HEP-G0003	160
HEP-G0004	102A
HEP-G0005	158
HEP-G0006	102A
HEP-G0007	102A
HEP-G0008	126
HEP-G0009	126
HEP-G003	160
HEP-G004	102A
HEP-G008	127
HEP-G0010	126
HEP-G0011	101
HEP-G6000	104
HEP-G6000	104
HEP-G6001	179
HEP-G6003	104
HEP-G6004	105
HEP-G6005	121
HEP-G6006	213
HEP-G6007	127
HEP-G6008	127
HEP-G6009	179
HEP-G6010	213
HEP-G6011	176
HEP-G6013	121
HEP-G6014	179
HEP-G6015	179
HEP-G6016	131
HEP-G6018	179
HEP-R0050	125
HEP-R0051	125
HEP-R0052	125
HEP-R0053	125
HEP-R0054	125
HEP-R0055	125
HEP-R0056	125
HEP-R0070	5801
HEP-R0071	5802
HEP-R0072	5804
HEP-R0074	5808
HEP-R0076	5808
HEP-R0078	5809
HEP-R0090	5800

@, * — See special notes on inside back cover.

* — Registered TM of Motorola, Inc.

To Be Replaced	ECG Replacement
HEP-R0091	5801
HEP-R0092	5802
HEP-R0094	5804
HEP-R0096	5806
HEP-R0097	5808
HEP-R0098	5809
HEP-R0130	5870
HEP-R0131	5872
HEP-R0132	5874
HEP-R0134	5878
HEP-R0136	5882
HEP-R0137	5886
HEP-R0138	5890
HEP-R0160	5940
HEP-R0161	5942
HEP-R0162	5944
HEP-R0164	5948
HEP-R0166	5952
HEP-R0250	5980
HEP-R0251	5982
HEP-R0253	5986
HEP-R0254	5988
HEP-R0255	5990
HEP-R0256	5992
HEP-R0257	5994
HEP-R0600	156
HEP-R0602	156
HEP-R0604	156
HEP-R0606	506
HEP-R0700	112
HEP-R0801	166
HEP-R0803	167
HEP-R0804	168
HEP-R0805	169
HEP-R0851	166
HEP-R0852	166
HEP-R0853	167
HEP-R0855	168
HEP-R0856	169
HEP-R1001	5400
HEP-R1002	5401
HEP-R1003	5402
HEP-R1004	5403
HEP-R1005	5404
HEP-R1202	5515
HEP-R1205	5515
HEP-R1218	5414
HEP-R1220	5442
HEP-R1221	5444
HEP-R1222	5446
HEP-R1223	5448
HEP-R1241	5481
HEP-R1242	5482
HEP-R1243	5483
HEP-R1244	5484
HEP-R1245	5485
HEP-R1246	5486
HEP-R1247	5487
HEP-R1300	5500
HEP-R1301	5501
HEP-R1302	5502
HEP-R1304	5504
HEP-R1306	5506
HEP-R1307	5507
HEP-R1471	5541
HEP-R1472	5542
HEP-R1473	5543
HEP-R1475	5545
HEP-R1721	5622
HEP-R1722	5623
HEP-R1723	5624
HEP-R1725	5626
HEP-R1750	5661
HEP-R1751	5663
HEP-R1752	5665
HEP-R1781	5681
HEP-R1782	5682
HEP-R1783	5683
HEP-R1785	5685
HEP-R2001	6403
HEP-R2002	6407
HEP-R2021	6404
HEP-R2500	610
HEP-R2501	611
HEP-R2503	614
HEP-R3201	522
HEP-R3203	500A
HEP-R9001	178MP
HEP-R9002	178MP
HEP-R9003	178MP
HEP-R9134	109
HEP-R9135	109
HEP-S0001	194
HEP-S0002	192
HEP-S0003	192
HEP-S0004	123A
HEP-S0005	194
HEP-S0006	234
HEP-S0008	229
HEP-S004	195A
HEP-S0010	229
HEP-S0011	123A
HEP-S0012	129
HEP-S0013	159
HEP-S0014	123A
HEP-S0015	123A
HEP-S0016	108
HEP-S0017	161
HEP-S0019	159
HEP-S0020	229
HEP-S0021	108
HEP-S0022	123A
HEP-S0023	199
HEP-S0024	199
HEP-S0025	123A

To Be Replaced	ECG Replacement
HEP-S0026	159
HEP-S0030	123A
HEP-S0031	159
HEP-S0032	159
HEP-S0033	229
HEP-S0034	123A
HEP-S3001	195A
HEP-S3002	282
HEP-S3006	320
HEP-S3010	282
HEP-S3011	282
HEP-S3012	129
HEP-S3013	311
HEP-S3019	190
HEP-S3020	188
HEP-S3021	191
HEP-S3022	191
HEP-S3023	210
HEP-S3024	210
HEP-S3025	210
HEP-S3026	188
HEP-S3027	211
HEP-S3028	211
HEP-S3029	211
HEP-S3030	189
HEP-S3031	189
HEP-S3032	189
HEP-S3033	154
HEP-S3034	154
HEP-S3035	154
HEP-S3042	128
HEP-S3043	322
HEP-S3045	235
HEP-S3049	295
HEP-S3052	325
HEP-S5000	184
HEP-S5001	182
HEP-S5002	183
HEP-S5003	184
HEP-S5004	182
HEP-S5005	183
HEP-S5006	185
HEP-S5007	185
HEP-S5008	183
HEP-S5009	183
HEP-S5010	183
HEP-S5011	124
HEP-S5012	175
HEP-S5013	129
HEP-S5014	128
HEP-S5015	157
HEP-S5018	218
HEP-S5019	175
HEP-S5020	162
HEP-S5022	159
HEP-S5023	129
HEP-S5024	154
HEP-S5025	154
HEP-S5026	154
HEP-S7000	181
HEP-S7001	180
HEP-S7002	130
HEP-S7003	219
HEP-S7004	130
HEP-S9001	6402
HEP-S9002	6409
HEP-S9100	172A
HEP-S9101	253
HEP-S9120	232
HEP-S9140	243
HEP-S9141	244
HEP-Z0206	5005A
HEP-Z0206A	5005A
HEP-Z0208	5007A
HEP-Z0208A	5007A
HEP-Z0210	5009A
HEP-Z0211	5010A
HEP-Z0211A	5010A
HEP-Z0212	5011A
HEP-Z0212A	5011A
HEP-Z0214	5013A
HEP-Z0214A	5013A
HEP-Z0215	5014A
HEP-Z0215A	5014A
HEP-Z0216	138A
HEP-Z0216A	5015A
HEP-Z0217	5016A
HEP-Z0217A	5016A
HEP-Z0219	5018A
HEP-Z0219A	5018A
HEP-Z0220	5019A
HEP-Z0220A	5019A
HEP-Z0222	5021A
HEP-Z0225	5024A
HEP-Z0228	5027A
HEP-Z0230	5029A
HEP-Z0231	5030A
HEP-Z0234	5033A
HEP-Z0254	5098A
HEP-Z0255	5099A
HEP-Z0401	5066A
HEP-Z0402	134A
HEP-Z0403	5067A
HEP-Z0405	5069A
HEP-Z0406	135A
HEP-Z0407	136A
HEP-Z0408	137A
HEP-Z0409	5071A
HEP-Z0410	138A
HEP-Z0411	5072A
HEP-Z0412	139A
HEP-Z0413	140A
HEP-Z0414	5074A
HEP-Z0415	142A
HEP-Z0416	143A

To Be Replaced	ECG Replacement
HEP-Z0417	144A
HEP-Z0418	145A
HEP-Z0419	5075A
HEP-Z0420	5077A
HEP-Z0421	5079A
HEP-Z0422	5080A
HEP-Z0423	5081A
HEP-Z0424	146A
HEP-Z0425	5083A
HEP-Z0426	147A
HEP-Z0427	5085A
HEP-Z0428	5086A
HEP-Z0430	5088A
HEP-Z0432	5090A
HEP-Z0433	149A
HEP-Z0436	150A
HEP-Z0438	5096A
HEP-Z0439	151A
HEP-Z0440	5097A
HEP-Z0442	5100A
HEP-Z0444	5103A
HEP-Z0445	5105A
HEP-Z02010A	5009A
HEP-Z2500	5111A
HEP-Z2502	5113A
HEP-Z2504	5115A
HEP-Z2506	5117A
HEP-Z2508	5119A
HEP-Z2510	5121A
HEP-Z2513	5124A
HEP-Z2514	5125A
HEP-Z2516	5127A
HEP-Z2519	5130A
HEP-Z2522	5133A
HEP-Z2525	5136A
HEP-Z2526	5137A
HEP-Z2528	5139A
HEP-Z2530	5141A
HEP-Z2531	5142A
HEP-Z2537	5148A
HEP-Z2542	5153A
HEP-Z2545	5156A
HEP-Z2547	5158A
HEP-Z2548	5159A
HEP-Z2551	5162A
HEP-Z3500	5174AK
HEP-Z3502	5176AK
HEP-Z3504	5178AK
HEP-Z3505	5180AK
HEP-Z3507	5182AK
HEP-Z3511	5185A
HEP-Z3512	5186A
HEP-Z3514	5188A
HEP-Z3516	5191A
HEP-Z3518	5194A
HEP-Z3520	5197A
HEP-Z3522	5200A
HEP-Z3524	5203A
HEP-Z3530	5212A
HEP-Z3534	5217A
HEP-Z3536	5220A
HEPC0900P	9662
HEPC0901P	9663
HEPC0902P	9668
HEPC0903P	9669
HEPC0904P	9670
HEPC0905P	9661
HEPC0906P	9664
HEPC0907P	9682
HEPC0908P	9681
HEPC0909P	9672
HEPC0910P	9665
HEPC0911P	9667
HEPC0912P	9663
HEPC6016	796
HEPC6016C	796
HEPC6050G	973
HEPC6065P	719
HEPC6089P	705A
HEPC6091	816
HEPC6094P	1006
HEPC6096P	801
HEPC6112P	964
HEPC7401P	7401
HEPC7405P	7405
HEPC7474P	7474
HEPC7493AP	7493A
HEPG6016	131
HEPR3012	525
HEPS0005	287
HEPS0020	108
HEPS0027	287
HEPS0028	288
HEPS0029	288
HEPS3005	347
HEPS3006	349
HEPS3008	311
HEPS3009	320
HEPS3013	311
HEPS3014	311
HEPS5019	175
HEPS5024	154
HEPS9120	232
HEPZ0254	5053A
HEPZ2504	5115A
HEPZ2551	5100A
HERR3201	522
HERR3203	500A
HF-0SW05	116
HF1	506
HF-1	506
HF-1A	506
HF1A	116
HF-1B	506
HF-1C	506

To Be Replaced	ECG Replacement
HF1C	506
HF1(Diode)	506
HF-1S334	139A
HF-1S339	139A
HF-1(Transistor)	123A
HF1(Transistor)	123A
HF-1Z	506
HF1Z	506
HF2	123A
HF3	123A
HF3H	160
HF3M	160
HF4	123A
HF5	123A
HF6	123A
HF6H	160
HF6M	160
HF7	123A
HF8	123A
HF9	128
HF10	129
HF11(Philco)	128
HF12H	160
HF12M	160
HF12N	160
HF12(Philco)	129
HF-17	506
HF19	121
HF-19D	179
HF20	121
HF20H	160
HF20M	160
HF-20005	610
HF22	130
HF23	180
HF24	181
HF25	180
HF-40	123A
HF40	194
HF45	210
HF46	211
HF47	106
HF-47	106
HF49	182
HF50	183
HF50H	160
HF50M	160
HF51	187
HF57	152
HF58	153
HF10022	109
HF-10024	109
HF-20004	139A
HF-20005	612
HF-20007	614
HF-20008	109
HF-20011	139A
HF-20014	177
HF20032	177
HF-20033	5071A
HF-20034	177
HF-20041	142A
HF-20042	116
HF-20047	116
HF-20048	177
HF-20050	116
HF-20052	116
HF-20060	177
HF-20062	610
HF-20063	519
HF-20064	177
HF-20065	139A
HF20066	116
HF-20067	116
HF-20071	125
HF-20080	612
HF-20083	116
HF-20084	116
HF-20088	110
HF-20095	177
HF-20105	601
HF-20124	519
HF200191A	132
HF200191A-0	132
HF200191A0	132
HF200191B-0	132
HF200191B0	132
HF200301B0	133
HF200301C-0	133
HF200301E	222
HF200301F0	132
HF200411B	132
HF200411C0	312
HF309301E	199
HF2000411B	132
HF-DS410	177
HF-MV2	177
HF-SD-1Z	506
HF0W05	116
HFS04	116
HFS-04	156
HFSD-1	506
HFSD1	506
HFSD-1A	506
HFSD-1B	506
HFSD-1C	506
HFSD-1C(Sears)	506
HFSD-1Z	506
HFSD12	156
HFSD-14	506
HFSG005	116
HG1090	109
HG5002	109
HG5004	109
HG5006	109

To Be Replaced	ECG Replacement
HG5007	109
HG5008	109
HG5009	109
HG5078	109
HG5079	109
HG5085	109
HG5088	109
HG5808	109
HGR1	116
HGR2	116
HGR3	116
HGR4	116
HGR-5	116
HGR-10	116
HGR-20	116
HGR-30	116
HGR-40	116
HGR-60	116
HI03HX	5640
HI03SC	5650
HI03SD	5650
HI03SG	5650
HI03SH	5640
HI03SS	5650
HI13HX	5640
HI13SC	5650
HI13SD	5650
HI13SG	5650
HI13SH	5640
HI13SS	5650
HI23HX	5641
HI23SC	5651
HI23SD	5651
HI23SG	5651
HI23SH	5641
HI23SS	5651
HI33HX	5642
HI33SC	5652
HI33SD	5652
HI33SG	5652
HI33SH	5642
HI33SS	5652
HI43HX	5642
HI43SC	5652
HI43SD	5652
HI43SG	5652
HI43SH	5642
HI43SS	5652
HI53HX	5643
HI53SH	5643
HI63HX	5643
HI63SH	5643
HI FI	116
HIFI	116
HJ15	102A
HJ15D	160
HJ17	102A
HJ17D	102A
HJ22	102A
HJ22D	102A
HJ23	102A
HJ23D	102A
HJ32	160
HJ34	160
HJ34A	160
HJ35	104
HJ37	160
HJ41	100
HJ43	102A
HJ50	102A
HJ51	102A
HJ54	102A
HJ55	160
HJ56	160
HJ57	160
HJ60	102A
HJ60A	160
HJ60C	160
HJ62	102A
HJ70	160
HJ71	158
HJ72	158
HJ73	158
HJ74	158
HJ226	158
HJ228	158
HJ230	158
HJ315	158
HJ606	102A
HJX2	102A
HK-00049	312
HK-00330	133
HK3405	407
HK3406	408
HK3407	409
HK3408	416
HK3409	416
HKT-158	123A
HKT-161	123A
HL18998	7400
HL18999	7474
HL19000	7404
HL19001	7410
HL19002	7473
HL19003	7420
HL19004	7402
HL19005	7403
HL19006	7493A
HL19008	74121
HL19009	7442
HL19010	7476
HL19011	7440
HL19012	7475
HL19013	7430
HL19014	7486

To Be Replaced	ECG Replacement
HL19015	7490
HL24510	941
HL24592	925
HL24593	941
HL24630	909
HL53424	9930
HL53426	9935
HL53428	9944
HL53429	9946
HL55660	7411
HL-55661	74S00
HL55663	74S138
HL55723	74S153
HL55763	7408
HL55764	74153
HL55861	74150
HL55862	7404
HL56320	74S10
HL56420	7400
HL56421	7404
HL56422	7420
HL56423	7430
HL56424	7438
HL56425	7474
HL56426	7485
HL56427	7495
HL56429	74192
HL56430	74193
HL56431	74H106
HL56842	7483
HL56899	7410
HM-00049	100
HM-08014	102A
HM-2	601
HM6.8	5014A
HM6.8A	5014A
HM7.5	5015A
HM7.5A	5015A
HM8.2	5016A
HM8.2A	5016A
HM9.1	5018A
HM9.1A	5018A
HM9.1B	139A
HM10	5019A
HM10A	5019A
HM10B	140A
HM11	5020A
HM11A	5020A
HM12	5021A
HM12A	5021A
HM12B	142A
HM13	5022A
HM13A	5022A
HM15	5024A
HM15A	5024A
HM15B	145A
HM16	5025A
HM16A	5025A
HM18	5027A
HM18A	5027A
HM20	5029A
HM20A	5029A
HM22	5030A
HM22A	5030A
HM24	5031A
HM24A	5031A
HM27	5033A
HM27A	5033A
HM27B	146A
HM30	5035A
HM30A	5035A
HM33	5036A
HM33A	5036A
HM36	5037A
HM36A	5037A
HM39	5038A
HM39A	5038A
HM43	5039A
HM43A	5039A
HM47	5040A
HM47A	5040A
HM51	5041A
HM51A	5041A
HM56	5042A
HM56A	5042A
HM62	5044A
HM62A	5044A
HM68	5045A
HM68A	5045A
HM75	5046A
HM75A	5046A
HM82	5047A
HM82A	5047A
HM91	5049A
HM91A	5049A
HM100	5050A
HM100A	5050A
HM110	5051A
HM110A	5051A
HM120	5052A
HM120A	5052A
HM130	5053A
HM130A	5053A
HM150	5055A
HM150A	5055A
HM160	5056A
HM160A	5056A
HM180	5058A
HM180A	5058A
HM200	5060A
HM200A	5060A
HM2501	7481
HN-00002	177
HN-00003	109
HN-00005	142A

To Be Replaced	ECG Replacement
HN-00008	116
HN-00012	139A
HN-00018	116
HN-00024	139A
HN-00029	116
HN-00032	116
HN-00045	614
HN-00052	610
HN-00053	601
HN-00061	140A
HN-0047	177
HO300	127
HP-5A	116
HP205	116
HP5082-2800	519
HP-20123	177
HPF1025	723
HR-05A	116
HR-1	102A
HR-2	102A
HR-2A(Diode)	116
HR-2A(Penncrest)	116
HR-2A(Transistor)	102A
HR-3	102A
HR-4	102A
HR-4A	102A
HR-5	102A
HR5A	116
HR-5A	116
HR5A8E	116
HR-5AX2	116
HR5B	116
HR-5B	116
HR-6	102A
HR-7	102A
HR-7A	102A
HR-8	102A
HR-8A	102A
HR-9	102A
HR-9A	102A
HR10	116
HR11	116
HR-11	123A
HR-11A	123A
HR-11B	123A
HR12A	128
HR12B	128
HR12C	128
HR12D	128
HR12E	128
HR12F	128
HR13	116
HR-13	123A
HR-13A	123A
HR-14	199
HR-14A	123A
HR-15	199
HR-15A	123A
HR-16	123A
HR-16A	123A
HR-17	123A
HR-17A	123A
HR-18	123A
HR-18A	123A
HR-19	123A
HR-19A	123A
HR-19E	179
HR-20	160
HR-20A	160
HR-21	160
HR-21A	160
HR-22	160
HR-22A	160
HR-22B	160
HR-24	160
HR-24A	160
HR-25	160
HR-25A	160
HR-26	160
HR-26A	160
HR-27	160
HR-27A	160
HR28	128
HR29	128
HR30	158
HR-32	123A
HR-36	123A
HR36	123A
HR-36	123A
HR-37	123A
HR-38	123A
HR-39	102A
HR40	160
HR41	160
HR42	160
HR43	160
HR44	160
HR45	160
HR46	160
HR-47	199
HR47	199
HR-48	123A
HR50	160
HR51	160
HR52	160
HR53	102A
HR58	108
HR59	108
HR60	108
HR61	102A
HR62	123A
HR63	123A
HR64	123A
HR65	123A
HR66	123A

To Be Replaced	ECG Replacement
HR-67	192
HR-68	196
HR-69	186
HR-70	187
HR-71	159
HR71	159
HR-72	193
HR72	193
HR-72	193
HR-73	210
HR-74	211
HR-75	199
HR76	229
HR77	229
HR78	229
HR79	107
HR80	107
HR81	128
HR82	192
HR83	192
HR84(NPN)	123A
HR84(PNP)	159
HR85	210
HR86	211
HR87	229
HR101	104
HR-101A	121
HR102	121
HR102C	121
HR103	121
HR105	121
HR105A	121
HR105B	121
HR106	124
HR107	124
HR107H	175
HR-107(Philco)	175
HR200	5082A
HR-200	5802
HR40836	160
HR40837	160
HR43835	160
HR45838	160
HR45910	160
HR45913	160
HR104961C	187
HR105611C	193
HR448636	160
HS0000206	601
HS1/7	118
HS1/9	118
HS5	102A
HS6/1	502
HS-7/1	118
HS7/17N	118
HS-8/1	118
HS9/1	118
HS9/17N	505
HS10/1	503
HS12	5061A
HS-15	102
HS15/1	505
HS15/1a(Sony)	502
HS15/1b	502
HS15-1C	503
HS15/1C	503
HS15/1c	503
HS15/1C	503
HS15/1(Sony)	502
HS15/16	503
HS15(Sanyo)	503
HS17D	102A
HS20	502
HS-20	505
HS20-1	503
HS20/1	505
HS20-1	505
HS20-1a	505
HS20/1aS	505
HS20/1b	504
HS20/1B	505
HS20/1b	505
HS20-1bS	505
HS20/1C	505
HS20/16S	505
HS20(Sony)	505
HS-22D	102
HS23D	102
HS25-1	505
HS25/1aS	505
HS25/1b	504
HS25/1B	505
HS25/1b	505
HS25/1BS	505
HS25/1C	504
HS25/1c	505
HS25/1C	505
HS25-1C	505
HS25/16	505
HS30	504
HS30-1b	504
HS30-1C	505
HS30/1C	505
HS30-16	504
HS-30/16	504
HS102	102A
HS133	112
HS151a(Sony)	502
HS170	102
HS251C	505
HS290	102
HS902A	112
HS1001	116
HS1002	116
HS1003	116

To Be Replaced	ECG Replacement
HS1007	116
HS1008	116
HS1009	116
HS1010	116
HS1012	116
HS1020	116
HS-1168	123A
HS-1225	108
HS-1226	108
HS-1227	108
HS-1229	123A
HS2027	5002A
HS2033A	5005A
HS2036	134A
HS2039	134A
HS2047	135A
HS2051	135A
HS2056	136A
HS2062	137A
HS2091	139A
HS2100	140A
HS2120	142A
HS2150	145A
HS2270	146A
HS2330	147A
HS2516	505
HS3103	116
HS3104	116
HS3108	125
HS3110	125
HS5810	192
HS5811	193
HS5812	192
HS5813	193
HS5814	192
HS5815	193
HS5816	192
HS5817	193
HS5818	192
HS5819	193
HS5820	192
HS5821	193
HS5822	192
HS5823	193
HS6010	192
HS6011	193
HS6012	192
HS6013	193
HS6014	192
HS6015	193
HS6016	192
HS6017	193
HS7027	5002A
HS7033	5005A
HS7036	134A
HS7039	134A
HS7051	135A
HS7056	136A
HS7062	137A
HS7091	139A
HS7100	140A
HS7120	142A
HS7150	145A
HS7270	146A
HS7330	147A
HS-40014	108
HS-40016	297
HS-40017	123A
HS-40019	229
HS-40020	108
HS40021	161
HS40022	161
HS40023	161
HS40024	161
HS40025	161
HS40026	128
HS-40027	296
HS-40030	128
HS-40031	159
HS40032	129
HS-40035	159
HS-40037	123A
HS-40039	128
HS-40040	159
HS-40044	123A
HS-40045	108
HS-40046	123A
HS40046	123A
HS-40047	108
HS40049	108
HS-40050	159
HS-40053	106
HS-40054	229
HS-40055	108
HS-40057	290
HS-90028	159
HSC-1	156
HSFD1	506
HSFD-1A	116
HSFD-1A(Sony)	506
HSFD-1Z(Sony-Blanking)	506
HSFD-1Z(Sony-Standby)	116
HSS1	502
HT0405190C	103A&158(CP)
HT-23G	177
HT100	159
HT101	159
HT400	123A
HT401	123A
HT20436A	131
HT20451A	158
HT30491C	128
HT30494	130
HT30494X	130
HT36441B	199

To Be Replaced	ECG Replacement
HT101011X	126
HT101021A	126
HT102341	160
HT102341A	160
HT102341B	160
HT102341C	160
HT102351	160
HT102351A	160
HT103501	160
HT103501A	126
HT103531C	126
HT103541B	126
HT104731Y0	153
HT104861	128
HT104861A	128
HT104861B	128
HT104941B-0	159
HT104941C-0	159
HT104941C0	159
HT104942A	159
HT104951A-0	159
HT104951B	159
HT104951B-0	159
HT104951B0	159
HT104951C	159
HT104951C0	159
HT104961B	185
HT104961C	184
HT104971A-0	129
HT104971A0	129
HT105611	159
HT105611A	159
HT105611B	159
HT105611B0	159
HT105611C	159
HT105612B	159
HT105621B-0	159
HT105621B0	159
HT105641C	234
HT105641D	234
HT105641H	234
HT105642B	234
HT106731B	159
HT106731B0	290
HT107211T	234
HT107331Q0	294
HT200540	102A
HT200540A	102A
HT200541	102A
HT200541A	102A
HT200541B	102A
HT200541B-0	102A
HT200541C	160
HT200561	102A
HT200561A	102A
HT200561B	102A
HT200561C	102A
HT200561C-0	102A
HT200751B	102A
HT200770B	102A
HT200771	102A
HT200771A	102A
HT200771B	102A
HT200771C	102A
HT201721A	102A
HT201721D	102A
HT201725A	102A
HT201782A	102A
HT201861A	102A
HT201871L	102A
HT203243A	158
HT203701	102A
HT203701A	102A
HT203701B	102A
HT204051	158
HT204051B	158
HT204051C	158
HT204051D	158
HT204051E	158
HT204053	158
HT204053A	158
HT204053B	158
HT204736	131
HT301451L0	199
HT303620B	123A
HT303711A	107
HT303711A-0	108
HT303711A0	123A
HT303711B	107
HT303711B-0	123A
HT303711B0	123A
HT303711C	107
HT303720A	108
HT303721-0	123A
HT303721D	123A
HT303730	123A
HT303730A	123A
HT303731A0	199
HT303732A0	199
HT303801	107
HT303801A	107
HT303801A0	107
HT303801B	107
HT303801B-0	107
HT303801B0	107
HT303801C	107
HT303801C0	107
HT303941	108
HT303941A	108
HT303941B	108
HT304501B0	107
HT304531	123A
HT304531A	123A
HT304531B	123A
HT304531C	123A

To Be Replaced	ECG Replacement
HT304540A0	108
HT304540B0	123A
HT304580	123A
HT304580A	123A
HT304580B	123A
HT304580C0	123A
HT304580K	123A
HT304580Y0	123A
HT304580Z	123A
HT304581	123A
HT304581A	123A
HT304581B	123A
HT304581B-0	123A
HT304581C	123A
HT304601B0	108
HT304601C0	108
HT304611B	108
HT304861	128
HT304861A	128
HT304861B	123A
HT304911	175
HT304911A	175
HT304911B	175
HT304941X	130
HT304951D0	295
HT304961B	184
HT304961C	184
HT304961C-0	186
HT304971A	128
HT304971A0	128
HT304971B	128
HT305091Y0	289
HT305351B0	229
HT305351C0	108
HT305361E	123A
HT305361G	123A
HT305371E	123A
HT305642B	234
HT306441	123A
HT306441A	123A
HT306441A0	128
HT306441B	123A
HT306441B-0	123A
HT306441B0	123A
HT306441C	123A
HT306441C-0	123A
HT306442A	199
HT306442B	199
HT306442B0	199
HT306451	108
HT306451A	107
HT306451B	108
HT306681C	108
HT306962A-0	108
HT307321A	123A
HT307321B-0	123A
HT307321C0	123A
HT307322A	123A
HT307331B	123A
HT307331C	123A
HT307331C0	123A
HT307341	128
HT307341A	128
HT307341B	123A
HT307341C-0	123A
HT307342B	128
HT307342C	128
HT307720B	107
HT307721C	107
HT307721D	107
HT307841B0	229
HT307841R0	229
HT307902B	184
HT308281B	123A
HT308281C	123A
HT308281D	199
HT308281G	123A
HT308281H	199
HT308281O	123A
HT308282A	123A
HT308282A-0	123A
HT308282A0	199
HT308282B	199
HT308291A	107
HT308291A-0	107
HT308291B	107
HT308291B-0	107
HT308291B0	107
HT308291C	107
HT308291C0	123A
HT308291D0	123A
HT308301B0	152
HT309001E0	199
HT309002A0	229
HT309291C	108
HT309291E	107
HT309301C	199
HT309301D	107
HT309301E	199
HT309301F	199
HT309451L0	199
HT309451R0	199
HT309680B	128
HT309714A-0	128
HT309841B0	128
HT309842A-0	123A
HT310002A	199
HT310471B0	108
HT311621B	152
HT311731Y0	152
HT312131C0	289
HT313171Q0	289
HT313171R	289
HT313172A	289
HT313181C	128

To Be Replaced	ECG Replacement
HT313271T	199
HT313271U0	199
HT313272A0	199
HT313272B	199
HT313591B0	229
HT313592B	229
HT313681B0	184
HT313831X	293
HT313831X0	293
HT313832B	293
HT313832C	293
HT313841R	293
HT314071Q	192
HT315182C0	293
HT316741M0	107
HT316751L0	229
HT316751M0	229
HT316781A0	235
HT320911A0	295
HT320921A0	235
HT400721	103A
HT400721A	103A
HT400721B	103A
HT400721C	103A
HT400721D	103A
HT400721E	103A
HT400723	103A
HT400723A	103A
HT400723B	103A
HT400770B	103A
HT401191	130
HT401191A	130
HT401191B	130
HT401193A0	280
HT401301B0	175
HT402352B	152
HT403131E0	196
HT403132A0	196
HT403152A	175
HT403152B	175
HT403523A	103A
HT404001E	192
HT404711L0	289
HT600011F	159
HT600011H	159
HT800011F	123A
HT800011G	123A
HT800011H	123A
HT800011K	123A
HT1001510	102A
HT2040710 A	121
HT2046710	131
HT3036210	123A
HT3037010	108
HT3037201	108
HT3037201A	108
HT3037201B	108
HT3037210	123A
HT3037210-0	123A
HT3037310	107
HT3038013-B	107
HT3046010B0	107
HT6000210	159
HT8000101	154
HT8000710	116
HT8001210	128
HT8001310	128
HT8001610	161
HT8001710	161
HT8001810	123A
HT30373100	123A
HT30387100	316
HT30733100	199
HT30945110	199
HT31317100	289
HT31327100	199
HT31518210	293
HT31909100	235
HT70011100	242
HT80059100	108
HT80060100	108
HV0000102	102A
HV0000105	116
HV0000105-0	116
HV0000202	102A
HV0000206	601
HV0000302	107
HV0000405	158
HV0000406	116
HV0000502	601
HV0000705	116
HV00001050	177
HV00001060	601
HV00002000	177
HV00005020	601
HV0001050	177
HV12	102A
HV-15	604
HV15	604
HV15PD	525
HV15(Transistor)	102A
HV16	102A
HV17	102A
HV17B	102A
HV19	102A
HV20	525
HV20C	525
HV-23	177
HV-23	600
HV23D	600
HV23E	600
HV-23(Elgin)	600
HV23F	600
HV23G	600

To Be Replaced	ECG Replacement
HV-23G	600
HV23-G	600
HV-23GB	600
HV23GBL	600
HV-23GYL	600
HV-25	177
HV25	123A
HV-25(DIODE)	177
HV25(Hitachi)	177
HV-25(RCA)	177
HV-26	116
HV26	600
HV-26G	116
HV-27	177
HV46	605
HV-46	605
HV46GR	605
HV-46OR	605
HV46RD	605
HV-80	177
HV80	601
HV-80	601
HV-100	116
HV460R	177
HVE15	525
HVK1333	522
HVK1334	534
HVPR10-06	548
HVPR10-08	548
HVPR10-1	548
HVPR10-10	548
HVPR10-12	548
HVPR15-4	542
HVPR15-4L	543
HVR-3B	544
HVR-5A	544
HVT-22DA	502
HVT400	523
HVT-DF-18	502
HW6.8	5071A
HW6.8A	5071A
HW7.5	138A
HW7.5A	138A
HW8.2	5072A
HW8.2A	5072A
HW9.1	139A
HW9.1A	139A
HW9.1B	139A
HW10	140A
HW10A	140A
HW11	5074A
HW11A	5074A
HW11B	141A
HW12	142A
HW12A	142A
HW12B	142A
HW13	143A
HW13A	143A
HW13B	143A
HW15	145A
HW15A	145A
HW15B	145A
HW16	5075A
HW16A	5075A
HW18	5077A
HW18A	5077A
HW20	5079A
HW20A	5079A
HW22	5080A
HW22A	5080A
HW24	5081A
HW24A	5081A
HW27	146A
HW27A	146A
HW27B	146A
HW30	5084A
HW30A	5084A
HW33	147A
HW33A	147A
HW33B	147A
HW36	5085A
HW36A	5085A
HW39	5086A
HW39A	5086A
HW43	5087A
HW43A	5087A
HW47	5088A
HW47A	5088A
HW51	5089A
HW51A	5089A
HW56	5090A
HW56A	5090A
HW56B	148A
HW62	149A
HW62A	149A
HW62B	149A
HW68	5092A
HW68A	5092A
HW75	5093A
HW75A	5093A
HW82	150A
HW82A	150A
HW82B	150A
HW91	5095A
HW91A	5095A
HW100	5096A
HW100A	5096A
HW110	151A
HW110A	151A
HW110B	151A
HW120	5097A
HW120A	5097A
HW130	5098A
HW130A	5098A

To Be Replaced	ECG Replacement
HW150	5100A
HW150A	5100A
HW160	5101A
HW160A	5101A
HW180	5103A
HW180A	5103A
HW200	5105A
HW200A	5105A
HX50001	108
HX50002	123A
HX50003	107
HX-50063	123A
HX-50072	123A
HX-50102	5402
HX-50103	192
HX-50104	193
HX-50105	159
HX-50106	299
HX-50107	199
HX-50108	287
HX-50109	288
HX-50110	229
HX-50112	159
HX-50113	123A
HX-50126	229
HX-50127	123A
HX-50128	159
HX-50129	293
HX-50130	294
HX-50159	5400
HY3045801C	123A
HZ5	5069A
HZ-5	135A
HZ-5B	135A
HZ5C	5010A
HZ-6B	5070A
HZ6B	136A
HZ6B2	136A
HZ-6C	137A
HZ6C	137A
HZ7	138A
HZ-7	138A
HZ-7A	138A
HZ7A	5071A
HZ-7AGR	138A
HZ7-B	5071A
HZ-7B	5071A
HZ7B	138A
HZ7C	138A
HZ-7C	5071A
HZ-7GR	138A
HZ-7SV	138A
HZ-7SVA	138A
HZ-7SVB	138A
HZ-9	5073A
HZ9	5018A
HZ-9B	5073A
HZ9B	5073A
HZ-9C	139A
HZ9C2	139A
HZ9HB	5073A
HZ-11	5074A
HZ-11A	5074A
HZ11A	5074A
HZ11B	5074A
HZ-11B	5074A
HZ11C	5074A
HZ11Y	5074A
HZ-12	142A
HZ-12A	142A
HZ-12B	142A
HZ-12C	144A
HZ16H	5075A
HZ20H	5079A
HZ-20VC	5079A
HZ-35	5085A
HZ35	5143A
HZ-35	5085A
HZ35	5085A
HZ-209	139A
HZ-212	142A
HZ5223	5063A
HZ5224	5064A
HZ5225	5065A
HZ5226	5066A
HZ5227	134A
HZ5228	5067A
HZ5229	5068A
HZ5230	5069A
HZ5231	5116A
HZ5232	136A
HZ5233	5070A
HZ5234	137A
HZ5235	5071A
HZ5236	138A
HZ5237	5072A
HZ5238	5073A
HZ5239	139A
HZ5240	140A
HZ5241	5074A
HZ5242	142A
HZ5243	143A
HZ5244	144A
HZ5245	145A
HZ5246	5075A
HZ5247	5076A
HZ5248	5077A
HZ5249	5078A
HZ5250	5079A
HZ5251	5080A
HZ5252	5081A
HZ5253	5082A
HZ5254	146A
HZ5255	5083A
HZ5256	5084A

To Be Replaced	ECG Replacement
HZ5257	147A
HZ5258	5085A
i3-33187-13	5097A
i9A115180-2	126
i9A115728-2	123A
i51-0141-00	175
i964(6	177
i6114	175
i6191	128
i6289	5635
i6342	197
i9631	128
i9680	159
i12032	160
i50865	106
i81030	159
i98763-3	5872
i98936-2	5675
i472446-i	121
i473608-2	128
i473679-1	128
i473688-1	5404
iB	503
IC-06-1	722
IC-06-1(Magnavox)	722
IC-06-2	722
IC-06-2(Magnavox)	722
IC-1-3304	912
IC-1(Dynalco)	912
IC-1(Philco)	703A
IC1(RCA)	711
IC-1(RCA)	711
IC-2-274(Dynalco)	912
IC-2(Dynalco)	912
IC2(ECS)	904
IC2(Elcom)	704
IC-2(Elcom)	704
IC-2(Philco)	703A
IC2(RCA)	710
IC-2(RCA)	710
IC3(PHILCO)	717
IC-3(Philco)@	717
IC-3(Philco)@	769
IC-4(Philco)	703A
IC-5(Elcom)	703A
IC-5(Philco)	782
IC-6	711
IC-6(Elcom)	703A
IC-6(Philco)	711
IC-7(Philco)	703A
IC-8	748
IC8B	748
IC-8B	704
IC-8B(Philco)	748
IC8B(Philco)	748
IC-8(Elcom)	704
IC-8(Philco)	748
IC-9(Elcom)	711
IC-9(Philco)	718
IC-10(ELCOM)	710
IC-10(Elcom)	710
IC-10(Philco)	706
IC-11(ELCOM)	726
IC-11(Elcom)	726
IC-11(Philco)	790
IC-12(ELCOM)	708
IC-12(Elcom)	708
IC-12(Philco)	714
IC13A(Elcom)	717
IC-13(Elcom)	717
IC-13(Philco)	715
IC-14(Philco)	739
IC14(Philco)	739
IC-15(Philco)	712
IC-16(ELCOM)	725
IC-16(Elcom)	725
IC-16(Philco)	780
IC-17 (Elcom)	718
IC-17(Elcom)	718
IC-17(Philco)	746
IC-18(ELCOM)	720
IC-18(Elcom)	720
IC-18(Philco)	747
IC-19(ELCOM)	705A
IC-19(Elcom)	705A
IC-19(Philco)	779-1*
IC20(Elcom)	784
IC-20(Philco)	923D
IC21	782
IC21(Elcom)	752
IC-21(Elcom)	752
IC-21(Philco)	782
IC23(Elcom)	784
IC-23(Elcom)	784
IC-23(Philco)	740A
IC-24(ELCOM)	706
IC-24(Elcom)	706
IC25A(Elcom)	705A
IC-25(ELCOM)	705A
IC-25(Elcom)	705A
IC26(Elcom)	748
IC-26(Elcom)	748
IC-26(Philco)	712
IC27(Elcom)	909D
IC-27(Elcom)	909D
IC-27(Philco)	779-1*
IC-28	749
IC28(Elcom)	785
IC-28(Elcom)	785
IC29(Elcom)	904
IC-30	799
IC30(Elcom)	9930
IC-31	1062
IC31(Elcom)	9936
IC32(Elcom)	9946

To Be Replaced	ECG Replacement
IC-33	731
IC33(Elcom)	9093
IC-33(Philco)	731
IC-34	746
IC34(Elcom)	9962
IC35(Elcom)	915
IC36(Elcom)	925
IC37(Elcom)	940
IC38(Elcom)	949
IC40	703A
IC-40(Elcom)	941
IC40(Elcom)	941
IC41(Elcom)	903
IC-42(Elcom)	911
IC42(Elcom)	911
IC43(Elcom)	923
IC-43(Elcom)	923
IC46(Elcom)	947
IC-46(Elcom)	947
IC48(Elcom)	725
IC-48(Elcom)	725
IC49(Elcom)	716
IC-49(Elcom)	716
IC-51A(Tele-Sig)	909D
IC53(Elcom)	923D
IC-53(Elcom)	923D
IC-55(Elcom)	9924
IC-56(Elcom)	9900
IC-58(Elcom)	9910
IC-59(Elcom)	9911
IC-61(Elcom)	9914
IC-62(Elcom)	9914
IC-63(Elcom)	9923
IC-65(Elcom)	9989
IC-71(Elcom)	7430
IC-74(Elcom)	7401
IC-75(Elcom)	7450
IC-79(Elcom)	7495
IC-80(Elcom)	7400
IC-81(Elcom)	7493A
IC-82(Elcom)	7402
IC-83(Elcom)	7403
IC-84(Elcom)	7404
IC-85(Elcom)	7405
IC-86(Elcom)	7410
IC-87(Elcom)	7420
IC-88(Elcom)	7440
IC-89(Elcom)	7441
IC-90(Elcom)	7442
IC-91(Elcom)	7451
IC-91(PHILCO)	703A
IC-91(Philco)	703A
IC-92(Elcom)	7453
IC-93(Elcom)	7454
IC-94(Elcom)	7472
IC-95(Elcom)	7473
IC-96(Elcom)	7475
IC-97(Elcom)	7474
IC-98(Elcom)	7490
IC-99(Elcom)	7476
IC-100(Elcom)	7492
IC-101-004	1098
IC101-109	703A
IC101(Columbia)	172A
IC-101(Elcom)	7447
IC-102(Elcom)	7408
IC-103(Elcom)	7413
IC-104(Elcom)	7406
IC-105(Elcom)	7416
IC-106(Elcom)	74121
IC-107(Elcom)	910D
IC-108(Elcom)	911D
IC-109(Elcom)	941D
IC-112	1080
IC-126	1105
IC-132	1079
IC-132(Sharp)	1079
IC-136	1051
IC-142	1050
IC-146	1004
IC-200(Elcom)	745
IC201(Elcom)	722
IC-201(Elcom)	722
IC202(Elcom)	747
IC-202(Elcom)	747
IC203(Elcom)	749
IC-203(Elcom)	749
IC204(Elcom)	750
IC-204(Elcom)	750
IC-205(Elcom)	708
IC210(Elcom)	909
IC-210(Elcom)	909
IC-211(Elcom)	903
IC-212(Elcom)	911
IC213(Elcom)	753
IC-213(Elcom)	753
IC217(Elcom)	773
IC-217(Elcom)	773
IC218(Elcom)	790
IC-218(Elcom)	790
IC-220(Elcom)	9662
IC-221(Elcom)	9665
IC-222(Elcom)	9666
IC-223(Elcom)	9667
IC-224(Elcom)	9672
IC-225(Elcom)	9663
IC229(Elcom)	9945
IC-234(Elcom)	9099
IC-237(Elcom)	9807
IC-243(Elcom)	766A
IC-244(Elcom)	767
IC-246(Elcom)	946
IC-276(Elcom)	9944
IC-279(Elcom)	9948
IC-280(Elcom)	9932

To Be Replaced	ECG Replacement
IC-281(Elcom)	9933
IC-282(Elcom)	9917
IC285(Elcom)	754
IC-285(Elcom)	754
IC286(Elcom)	761
IC-286(Elcom)	761
IC-287(Elcom)	814
IC-288(Elcom)	779-1*
IC288(Elcom)	779-1*
IC-289(Elcom)	798
IC290(Elcom)	755
IC-290(Elcom)	755
IC292(Elcom)	771
IC-292(Elcom)	771
IC293(Elcom)	739
IC293(Elcom)	739
IC-293(Elcom)	739
IC294(Elcom)	746
IC-294(Elcom)	746
IC-295(Elcom)	941M
IC-296(Elcom)	778
IC297(Elcom)	738
IC-297(Elcom)	738
IC298(Elcom)	760
IC-298(Elcom)	760
IC301(Elcom)	724
IC-301(Elcom)	724
IC302(Elcom)	711
IC-304(Elcom)	912
IC305(Elcom)	727
IC-305(Elcom)	727
IC-306(Elcom)	914
IC307(Elcom)	783
IC-307(Elcom)	780
IC308(Elcom)	712
IC309(Elcom)	723
IC310(Elcom)	781
IC311(Elcom)	730
IC312(Elcom)	714
IC313(Elcom)	715
IC314(Elcom)	728
IC315(Elcom)	729
IC317(Elcom)	941
IC-317(Elcom)	913
IC-318(Elcom)	913
IC319(Elcom)	786
IC-319(Elcom)	786
IC320(Elcom)	789
IC-320(Elcom)	729
IC-322(Elcom)	731
IC-323(Elcom)	787
IC-324(Elcom)	788
IC-325(Elcom)	791
IC-401	706
IC401	706
IC-403(Elcom)	1053
IC405(Elcom)	721
IC-405(Elcom)	721
IC-408(Elcom)	724
IC-409(Elcom)	9663
IC-410(Elcom)	9668
IC411(Elcom)	910
IC-412(Elcom)	9670
IC-413(Elcom)	9661
IC-414(Elcom)	9664
IC-415(Elcom)	9682
IC-419(Elcom)	9157
IC-420(Elcom)	9158
IC-423(Elcom)	9917
IC-431(Elcom)	769
IC-432(Elcom)	762
IC-433(Elcom)	756
IC-435(Elcom)	755
IC-441(Elcom)	9669
IC-442(Elcom)	755
IC-443(Elcom)	757
IC-444(Elcom)	758
IC-445(Elcom)	759
IC-446(Elcom)	763
IC-447(Elcom)	764
IC-448(Elcom)	765
IC-449(Elcom)	768
IC-450(Elcom)	770
IC-451(Elcom)	772A
IC-453(Elcom)	776
IC-455(Elcom)	9093
IC-457(Elcom)	783
IC-500(Elcom)	7482
IC500(IR)	703A
IC501(Elcom)	760
IC501(IR)	704
IC502	705A
IC502(Elcom)	719
IC502(Elcom)	719
IC-502(Elcom)	719
IC502(IR)	705A
IC503	707
IC503(IR)	707
IC504	708
IC504(IR)	708
IC505	709
IC-505(Elcom)	1061
IC505(IR)	709
IC506(IR)	710
IC507	712
IC507(Elcom)	774
IC-507(Elcom)	774
IC507(IR)	712
IC508	790
IC-508(Elcom)	1075A
IC508(IR)	790
IC509	714
IC-509(Elcom)	1083
IC509(IR)	714
IC510	715

To Be Replaced	ECG Replacement
IC510(IR)	715
IC511	718
IC511(IR)	718
IC-512(Elcom)	1039
IC512(IR)	720
IC513	722
IC513(IR)	722
IC-517(Elcom)	1042
IC-520(Elcom)	955M
IC-521(Elcom)	799
IC-523(Elcom)	782
IC-524(Elcom)	740A
IC-526(Elcom)	370
IC-527(Elcom)	371
IC-531(Elcom)	923D
IC-533(Elcom)	1046
IC-534(Elcom)	1136
IC-535(Elcom)	1123
IC-537(Elcom)	1071
IC-540(Elcom)	1137
IC-542(Elcom)	1003
IC-543(Elcom)	1006
IC-545(Elcom)	1109
IC-546(Elcom)	712
IC-547(Elcom)	1013
IC-548(Elcom)	1015
IC-549(Elcom)	1012
IC-550(Elcom)	1152
IC-551(Elcom)	1018
IC-552(Elcom)	1056
IC-553(Elcom)	1073
IC-554(Elcom)	1054
IC-600(Elcom)	734
IC-601(Elcom)	735
IC-602(Elcom)	804
IC-603(Elcom)	733
IC-604(Elcom)	736
IC-605(Elcom)	740A
IC-606(Elcom)	743
IC-607(Elcom)	744
IC700	1024
IC1303P	725
IC3014	704
IC743038	195A
IC743039	195A
IC743040	229
IC743041	229
IC743042	123A
IC743043	290
IC743044	289
IC743045	235
IC743046	132
IC743047	139A
IC743048	116
IC743049	519
IC743050	109
IC743051	177
ICF-1	703A
ICF-1-6826	703A
ICL748CTY	1171
ICL748TY	1171
ICS	504
ID100	5400
ID101	5401
ID102	5402
ID103	5403
ID104	5404
ID105	5405
ID106	5405
IDA1Z5B	135A
IDA1Z6.8B	5071A
IDA1Z8.2B	5072A
IDA1Z10B	140A
IDA1Z14B	144A
IDA1Z18B	5077A
IDA1Z22B	5080A
IDAZ824B	137A
IDAZ3397B	5067A
IDAZ3398B	5068A
IDAZ3399B	135A
IDAZ3400B	5071A
IDAZ3401B	5072A
IDAZ3402B	140A
IDAZ3403B	142A
IDAZ3404B	145A
IDAZ3405B	5077A
IE460B	229
IE703E	703A
IE-850	103A
IF-65	102A
IF AMP	703A
IG-100	105
IL1	3040
IL5	3042
IL-5	3042
IL209	3007
IL216	3008
IL709S	909D
ILD1020	1012
IN60-1	109
IN4051	6356
IN5985B	5061A
INC61684	507
INJ60284	109
INJ61224	109,110
INJ61225	137A
INJ61227	116(2)
INJ61433	177
INJ61675	109
INJ61677	177
INJ61725	177
INJ61726	116
INTRON-108	128
INTRON-127	175
IP20-0001	123A

To Be Replaced	ECG Replacement
IP20-0002	123AP
IP20-0003	123A
IP20-0004	195A
IP20-0004(DRIVER)	195A
IP20-0005	237
IP20-0006	123A
IP20-0007	152
IP20-0008	103A
IP20-0009	159
IP20-0010	133
IP20-0011	132
IP20-0012	312
IP20-0014	1102
IP20-0015	109
IP20-0016	109
IP20-0018	177
IP20-0019	139A
IP20-0020	109
IP20-0021	519
IP20-0022	116
IP20-0023	177
IP20-0024	116
IP20-0025	116
IP20-0026	125
IP20-0027	138A
IP20-0028	223
IP20-0029	123A
IP20-0032	123A
IP20-0033	300
IP20-0034	199
IP20-0035	132
IP20-0036	152
IP20-0037	229
IP20-0038	229
IP20-0039	123A
IP20-0040	123A
IP20-0041	289
IP20-0046	290
IP20-0048	195A
IP20-0054	116
IP20-0060	109
IP-20-0060	109
IP20-0061	519
IP20-0062	5070A
IP20-0065	229
IP20-0068	7473
IP20-0076	103A
IP20-0078	132
IP20-0083	235
IP20-0086	135A
IP20-0088	233
IP20-0089	316
IP20-0091	123A
IP20-0093	1104
IP20-0094	712
IP20-0095	1097
IP20-0097	7401
IP20-0098	177
IP20-03-5	312
IP20-0103	295
IP20-0105	123A
IP20-0106	278
IP20-0110	229
IP20-0114	278
IP20-0120	601
IP20-0122	123A
IP-20-0123	299
IP20-0123	299
IP20-0131	299
IP20-0132	295
IP20-0135	235
IP-20-0135	236
IP20-0139	5010A
IP20-0141	1100
IP20-0142	1103
IP20-0144	220
IP20-0145	177
IP20-0148	152
IP20-0149	128
IP20-0150	129
IP20-0154	236
IP20-0155	235
IP20-0156	295
IP20-0157	222
IP20-0159	159
IP20-0160	103A
IP20-0161	1155
IP20-0162	133
IP20-0164	156
IP20-0165	289
IP20-0167	116
IP20-0170	123A
IP20-0171	229
IP20-0172	300
IP20-0173	312
IP20-0174	703A
IP-20-0179	233
IP20-0179	233
IP-20-0184	519
IP20-0184	177
IP-20-0185	612
IP20-0185	612
IP-20-0186	5071A
IP20-0186	5071A
IP-20-0191	289
IP20-0191	289
IP20-0192	290
IP-20-0192	290
IP20-0197	290
IP20-0203	5070A
IP20-0204	611
IP20-0205	7400
IP20-0206	7474
IP20-0207	7493A
IP20-0208	74H22

To Be Replaced	ECG Replacement
IP20-0209	74161
IP20-0210	974
IP20-0211	298
IP20-0212	175
IP20-0213	290
IP20-0214	293
IP20-0216	519
IP20-0217	129
IP20-0218	222
IP20-0220	988
IP-20-0230	184
IP20-0230	184
IP20-0231	289
IP-20-0231	289
IP-20-0233	140A
IP20-0233	140A
IP-20-0244	600
IP20-0258	229
IP20-0262	236
IP20-0264	312
IP20-0282	519
IP20-0283	109
IP20-0284	137A
IP20-0305	312
IP20-0306	123A
IP20-0310	7401
IP20-0316	7474
IP20-0317	1261
IP20-0320	293
IP20-0321	235
IP20-0322	236
IP20-0323	152
IP20-0331	229
IP20-0332	123A
IP20-0333	1248
IP20-0336	293
IP20-0339	107
IP20-0342	611
IP20-0344	1260
IP20-0345	234
IP20-0346	123A
IP20-0347	123A
IP20-0348	229
IP20-0349	295
IP20-0350	236
IP20-0351	977
IP20-0191	289
IP20-2063	235
IP100	5400
IP101	5401
IP102	5402
IP103	5403
IP104	5404
IP105	5405
IP106	5405
IR1D	116
IR1F	506
IR2A	116
IR2E	116
IR3D	506
IR3IC	5544
IR5JA	109
IR10D	177
iR10D3L	506
IR10E6J	116
IR10E6X	519
IR20	116
IR-28-R/508	910D
IR30C	5544
IR30D	5545
IR106A1	5454
IR106A1-C	5454
IR106A2	5454
IR106A3	5454
IR106A4	5454
IR106A41	5454
IR106B1	5455
IR106B1-C	5455
IR106B2	5455
IR106B3	5455
IR106B4	5455
IR106B41	5455
IR106C1	5456
IR106C1-C	5456
IR106C2	5456
IR106C3	5456
IR106C4	5456
IR106C41	5456
IR106D1	5457
IR106D2	5457
IR106D3	5457
IR106D4	5457
IR106D41	5457
IR106F1	5453
IR106F2	5453
IR106F3	5453
IR106F4	5453
IR106F41	5453
IR106Q1	5452
IR106Q2	5452
IR106Q3	5452
IR106Q4	5452
IR106Q41	5452
IR106Y1	5452
IR106Y1-C	5452
IR106Y2	5452
IR122A	5462
IR122A-C	5462
IR122B	5463
IR122B-C	5463
IR122C	5465
IR122C-C	5465
IR122D	5465
IR122D-C	5465
IR122F	5461

To Be Replaced	ECG Replacement
IR122F-C	5461
IR402	283
IR403	283
IR409	162
IR423	162
IR515	283
IR516	283
IR517	283
IR518	283
IR519	283
IR682	5521
IR683	5522
IR684	5523
IR685	5524
IR686	5525
IR687	5526
IR688	5527
IR689	5528
IR690	5529
IR692	5531
IR729	283
IR1600	5470
IR1601	5471
IR1602	5472
IR1603	5473
IR1604	5474
IR1771	5481
IR1772	5482
IR1774	5483
IR1776	5484
IR1777	5485
IR1778	5486
IR1843A	5501
IR1844A	5502
IR1846A	5504
IR1848A	5506
IR1849A	5507
IR1850A	5508
IR2160	6400
IR5253	327
IR-RE50	131
IR-TR53	128
IR-TR56	187
IR-TR57	175
IR-TR59	130
IR-TR60	157
IR-TR61	162
IRC5	5453
IRC10	5454
IRC20	5455
IRC30	5456
IRC40	5457
IRD54	6408
IRD-54	6408
IRD54-C	6408
IRTR51	199
IRTR57	196
IRTR58	218
IRTR62	123A
IRTR63	123A
IRTR64	195A
IRTR65	195A
IRTR67	163A
IRTR68	164
IRTR69	172A
IRTR70	161
IRTR71	161
IRTR72	188
IRTR73	189
IRTR74	190
IRTR75	191
IRTR76	152
IRTR77	153
IRTR78	154
IRTR79	171
IRTR82	176
IRTR84	158
IRTR85	102A
IRTR86	123
IRTR87	128
IRTR88	129
IRTR91	155
IRTR92	196
IRTR93	165
IRTR94	226MP
IRTR94MP	226MP
IRTR95	108
IS010	5550
IS020	5550
IS01209	601
IS110	5552
IS120	5552
IS210	5552
IS220	5552
IS310	5554
IS320	5554
IS410	5554
IS420	5554
IS-446D	178MP
IS510	5556
IS520	5556
IS610	5556
IS620	5556
IS710	5558
IS720	5558
IS810	5558
IS820	5558
ISBF1	102A
ISD-162	103
IT06	56004
IT08	56004
IT010	56004
IT015	56004
IT6	612
IT10D4K	116

@, * — See special notes on inside back cover.

To Be Replaced	ECG Replacement
IT16	56004
IT18	56004
IT18(DIODE)	610
IT22	109
IT22A	109
IT23	109
IT23G	109
IT26	56004
IT28	56004
IT36	56006
IT38	56006
IT40	177
IT46	56006
IT48	56006
IT56	56008
IT58	56008
IT66	56008
IT68	56008
IT76	56010
IT78	56010
IT86	56010
IT88	56010
IT108	312
IT110	56004
IT115	56004
IT210	56004
IT215	56004
IT261	109
IT310	56006
IT315	56006
IT410	56006
IT415	56006
IT510	56008
IT515	56008
IT610	56008
IT615	56008
IT710	56010
IT715	56010
IT810	56010
IT815	56010
IT4640	3071
ITC3510	3054
ITC3520	3063
ITC3540	3059
ITC3610	3053
ITC3620	3062
ITC3640	3058
ITC3710	3052
ITC3720	3061
ITC3730	3065
ITC3740	3056
ITC3810	3055
ITC3820	3064
ITC3840	3060
ITC4610	3070
ITC4710	3068
ITC4740	3069
ITC6710	3074
ITC6730	3076
ITC6740	3075
ITC6750	3077
ITC6760	3078
ITC6780	3079
ITE3066	457
ITE3067	457
ITE4339	457
ITE4340	457
ITE4391	467
ITH61	125
ITT-73	519
ITT73	117
ITT73N	519
ITT-73N	519
ITT73N	177
ITT74H00N	74H00
ITT74H01N	74H01
ITT74H04N	74H04
ITT74H05N	74H05
ITT74H10N	74H10
ITT74H11N	74H11
ITT74H20N	74H20
ITT74H21N	74H21
ITT74H30N	74H30
ITT74H40N	74H40
ITT74H50N	74H50
ITT74H51N	74H51
ITT74H53N	74H53
ITT74H54N	74H54
ITT74H60N	74H60
ITT74H72N	74H72
ITT74H73N	74H73
ITT74H74N	74H74
ITT74H76N	74H76
ITT74LS00	74LS00
ITT74LS02	74LS02
ITT74LS04	74LS04
ITT74LS08	74LS08
ITT74LS10	74LS10
ITT74LS11	74LS11
ITT74LS14	74LS14
ITT74LS27	74LS27
ITT74LS30	74LS30
ITT74LS32	74LS32
ITT74LS38	74LS38
ITT74LS51	74LS51
ITT74LS73	74LS73
ITT74LS74	74LS74A
ITT74LS75	74LS75
ITT74LS86	74LS86
ITT74LS93	74LS93
ITT74LS107	74LS107
ITT74LS109	74LS109A
ITT74LS123	74LS123
ITT74LS138	74LS138
ITT74LS151	74LS151

To Be Replaced	ECG Replacement
ITT74LS157	74LS157
ITT74LS161	74LS161A
ITT74LS163	74LS163A
ITT74LS164	74LS164
ITT74LS174	74LS174
ITT74LS175	74LS175
ITT74LS191	74LS191
ITT74LS193	74LS193
ITT74LS195	74LS195A
ITT74LS221	74LS221
ITT74LS253	74LS253
ITT74LS257	74LS257
ITT74LS367	74LS367
ITT102	109
ITT181-1	177
ITT200	519
ITT210	611
ITT301	109
ITT310	614
ITT-310	614
ITT310G	614
ITT-310S	614
ITT350	116
ITT402	116
ITT410	612
ITT-410	612
ITT410	612
ITT413	177
ITT491	75491B
ITT492	75492B
ITT493	75493
ITT494	75494
ITT552	2011
ITT554	2012
ITT556	2013
ITT558	2014
ITT652	2011
ITT654	2012
ITT656	2013
ITT658	2014
ITT709-5(D.I.P.)	909D
ITT709-5(Metal Can)	909
ITT709(D.I.P.)	909D
ITT709(Metal Can)	909
ITT710-5(D.I.P.)	910D
ITT710-5(Metal Can)	910
ITT710(D.I.P.)	910D
ITT710(Metal Can)	910
ITT711-5(D.I.P)	911D
ITT711-5(Metal Can)	911
ITT711(D.I.P.)	911D
ITT711(Metal Can)	911
ITT718	109
ITT723-5(D.I.P.)	923D
ITT723-5(Metal Can)	923
ITT723(D.I.P.)	923D
ITT723(Metal Can)	923
ITT741-5C	941
ITT741-5D	941D
ITT741-5(D.I.P.)	941D
ITT741-5(Metal Can)	941
ITT741-5P	941D
ITT741(D.I.P.)	941D
ITT741(Metal Can)	941
ITT921	177
ITT930-5	9930
ITT930N	9930
ITT932-5	9932
ITT932N	9932
ITT933-5	9933
ITT933N	9933
ITT935-5	9935
ITT935N	9935
ITT936-5	9936
ITT936-5D	9936
ITT936N	9936
ITT937-5	9937
ITT937N	9937
ITT941-5	9941
ITT941N	9941
ITT944-5	9944
ITT944N	9944
ITT945-5	9945
ITT945N	9945
ITT946-5	9946
ITT946-5D	9946
ITT946N	9946
ITT948-5	9948
ITT948N	9948
ITT949-5	9949
ITT949N	9949
ITT951-5	9951
ITT951N	9951
ITT961-5	9961
ITT961N	9961
ITT962-5	9962
ITT962N	9962
ITT963-5	9963
ITT963N	9963
ITT992	116
ITT1800-5	9800
ITT1800N	9800
ITT1801N	9801
ITT1806-5	9806
ITT1806N	9806
ITT1807-5	9806
ITT1807N	9807
ITT1808-5	9808
ITT1808N	9808
ITT1809-5	9809
ITT1809N	9809

To Be Replaced	ECG Replacement
ITT1810-5	9810
ITT1810N	9810
ITT1811-5	9811
ITT1811N	9811
ITT3064(D.I.P.)	783
ITT3064(Metal Can)	780
ITT7215	177
ITT7400N	7400
ITT7401N	7401
ITT7402N	7402
ITT7403N	7403
ITT7404N	7404
ITT7405N	7405
ITT7406N	7406
ITT7407N	7407
ITT7408N	7408
ITT7409N	7409
ITT7410N	7410
ITT7411N	7411
ITT7412N	7412
ITT7413N	7413
ITT7416N	7416
ITT7417N	7417
ITT7420N	7420
ITT7421N	7421
ITT7425N	7425
ITT7426N	7426
ITT7428	7428
ITT7428N	7428
ITT7430N	7430
ITT7432N	7432
ITT7433	7433
ITT7433N	7433
ITT7437N	7437
ITT7438N	7438
ITT7440N	7440
ITT7442N	7442
ITT7443N	7443
ITT7444N	7444
ITT7445N	7445
ITT7446AN	7446
ITT7447AN	7447
ITT7448N	7448
ITT7450N	7450
ITT7451N	7451
ITT7453N	7453
ITT7454N	7454
ITT7460N	7460
ITT7470N	7470
ITT7472N	7472
ITT7473N	7473
ITT7475N	7475
ITT7476N	7476
ITT7480N	7480
ITT7482N	7482
ITT7483N	7483
ITT7486N	7486
ITT7490N	7490
ITT7491AN	7491
ITT7492N	7492
ITT7493N	7493A
ITT7494N	7494
ITT7495AN	7495
ITT7496N	7496
ITT9093-5	9093
ITT9093N	9093
ITT9094-5	9094
ITT9094N	9094
ITT9097-5	9097
ITT9097N	9097
ITT9099-5	9099
ITT9099N	9099
ITT74107N	74107
ITT74109	74109
ITT74109N	74109
ITT74121N	74121
ITT74122N	74122
ITT74123N	74123
ITT74141N	74141
ITT74145N	74145
ITT74150N	74150
ITT74151N	74151
ITT74152N	74152
ITT74153N	74153
ITT74154N	74154
ITT74155N	74155
ITT74156N	74156
ITT74160N	74160
ITT74161N	74161
ITT74162N	74162
ITT74163N	74163
ITT74164N	74164
ITT74165N	74165
ITT74174N	74174
ITT74175N	74175
ITT74180N	74180
ITT74181N	74181
ITT74182N	74182
ITT74190N	74190
ITT74191N	74191
ITT74192N	74192
ITT74193N	74193
ITT74195N	74195
ITTWG713	177
IV5053	3020
IV5054-2	3025
IV5153	3023
IV5253	3024
IV5353	3021
IW01-09J	5074A
IX8055-379005N	519
IZ9.1	139A
J03025	366
J03030	367
J03040	367

To Be Replaced	ECG Replacement
J03055	368
J04070	352
J04075	352
J4-1000	7400
J4-1002	7402
J4-1004	7404
J4-1010	7410
J4-1047	7447
J4-1075	7475
J4-1076	7476
J4-1090	7490
J4-1092	7492
J4-1121	74121
J4-1555	955M
J4A3	6354
J4B3	6354
J4C3	6354
J4D3	6354
J4E3	6354
J4F3	6354
J4G3	6354
J4H3	6356
J4K3	6356
J4M3	6358
J4N3	6358
J5A3	6354
J5B3	6354
J5C3	6354
J5D3	6354
J5E3	6354
J5F3	6354
J5G3	6354
J5H3	6356
J5K3	6356
J5M3	6358
J5N3	6358
J10	156
J100	116
J107	107
J108	108
J139A	123A
J187	108
J241	110
J242	109
J243	109
J308	312
J685	109
J775-0	5322
J775-1	5322
J775-2	5322
J775-4	5324
J775-6	5326
J961B(G.E.)	123A
J1000-7400	7400
J1000-7402	7402
J1000-7404	7404
J1000-7410	7410
J1000-7447	7447
J1000-7476	7476
J1000-7490	7490
J1000-7492	7492
J1000-74121	74121
J1000-NE555	955M
J2441	109
J5062	160
J5063	102A
J5064	102A
J9400	184
J9631	123A
J9680	159
J9681	159
J9697	159
J20437	116
J20438	142A
J24127	116
J24186	136A
J24262	5070A
J24366	131MP
J24458	123A
J24561	107
J24562	107
J24563	107
J24564	123A
J24565	123A
J24566	124
J24567	110
J24570	116
J24596	108
J24620	160
J24621	160
J24622	160
J24623	160
J24624	123A
J24625	123A
J24626	102A
J24628	110MP
J24630	116
J24631	137A
J24632	139A
J24635	108
J24636	108
J24637	108
J24639	102A
J24640	159
J24641	123A
J24642	175
J24643	109,110MP
J24645	116
J24647	116
J24658	123A
J24701	107
J24752	123A
J24753	123A
J24754	184&185(CP)
J24755	177

To Be Replaced	ECG Replacement
J24756	116
J24812	199
J24813	108
J24814	108
J24817	123A
J24820	110MP
J24852	108
J24855	123A
J24863	108
J24868*	103A
J24869	102A
J24870	102A
J24871	116
J24872	140A
J24874	123A
J24875	199
J24877	116
J24878	123A
J24903	107
J24904	108
J24905	108
J24906	123A
J24907	123A
J24908	129
J24909	123A
J24911	109
J24912	177
J24913	109
J24914	109
J24915	108
J24916	123A
J24919	117
J24920	116
J24921	108
J24923	108
J24932	199
J24933	108
J24934	102A
J24935	116
J24939	116
J24940	116
J101183	116
J241015	129
J241054	123A
J241099	123A
J241100	116
J241102	116
J241142	116
J241164	102A
J241177	107
J241178	158
J241179	137A
J241182	177
J241183	506
J241185	103A
J241186	136A
J241188	107
J241189	107
J241190	102A
J241209	116
J241210	116
J241211	116
J241212	117
J241213	177
J241214	116
J241215	506
J241216	5082A
J241217	141A
J241218	138A
J241219	749
J241220	1050
J241221	1089*
J241222	712
J241224	218
J241225	159
J241226	159
J241227	238
J241228	124
J241229	124
J241230	123A
J241231	175
J241232	116
J241233	198
J241234	177
J241235	177
J241236	231
J241241	152
J241242	177
J241245	109
J241250	184
J241251	123A
J241252	196
J241253	159
J241255	128
J241256	128
J241258	218
J241259	159
J241260	116
J241270	748
J241271	116
J310159	102A
J310224	102A
J310249	123A
J310250	123A
J310251	160
J310252	102A
J320020	116
J320041	109
JA1050	159
JA1050B	159
JA1050G	159
JA1050GL	159
JA1050W	199
JA1200	123A
JA1300	194

To Be Replaced	ECG Replacement
JA1350	199
JA1350B	199
JA1350W	199
JA1350Y	199
JA1600G	123A
JA7010	199
JA7072	184
JA-H	123A
JA-KCDP	156
JA-L	123A
JAM702C	116
JB-00030	116
JB00036	166
JB-00036	117
JB16C4	116(4)
JB-BB1A	116
JC-00012	116
JC-00014	116
JC-00017	506
JC-00028	116
JC-00032	116
JC-00033	116
JC-00035	116
JC-00037	116
JC-00042	116
JC-00044	116
JC-00045	116
JC-00047	116
JC-00049	116
JC00049	116
JC-00049	116
JC00050	116
JC-00051	116
JC-00053	116
JC-00055	116
JC-00059	156
JC-0025	117
JC-8	748
JC-10D1	116
JC100	105
JC-DS16E	116
JC-KS05	116
JC-SD-1X	116
JC-SD-1Z	116
JC-SG005	116
JC-V03C	116(2)
JCN1	116
JCN2	116
JCN3	116
JCN4	116
JCN5	116
JCN6	116
JCN7	125
JCV-2	116
JCV-3	116
JCV7	125
JD-00040	116
JD-BB1A	116
JDSD1D	116
JE1033B	132
JE9011	123A
JE9011H	123A
JE9011I	195A
JE9011Q	195A
JE9014	199
JE9014B	199
JE9014BE	199
JE9014C	199
JE9014D	199
JE9014E	199
JE9015	294
JE9015B	294
JEM1	105
JEM2	105
JEM3	105
JEM4	105
JEM5	105
JF1033	312
JF-1033	312
JF1033B	312
JF-1033B	312
JF1033G	312
JF1033J	312
JF1033-RED	312
JF1033S	312
JF1033Y	312
JF-1034	133
JF1034	133
JF-1034R	133
JF1034R	133
JK1033	133
JK1033B	312
JL40A	177
JLM-20	123A
JLM284	955M
JM40	177
JM-40	177
JM401	177
JN271	123A
JNJ61673	133
JP40	104
JP5062	160
JP5063	102A
JP5064	102A
JP575005	110
JP575995	110
JR5	102A
JR10	160
JR15	102A
JR30	160
JR30X	160
JR40	104
JR100	160
JR200	160
JSP1675L	108

To Be Replaced	ECG Replacement
JSP6009	242
JSP7001	123A
JSP-7001	199
JSP7001B	123A
JSP-7001B	199
JSP7001B(Preamp)	199
JSP7001J	123A
JSP7001L	123A
JSP7001R	123A
JSP7005	108
JSP7006	108
JSP7061B	229
JST1501-1	421
JT-1601-40	123A
JT-1601-41	112
JT-E1014	109
JT-E1024D	116
JT-E1031	109
JT-E1064	116
JT-E1095	118
JZ5.6B	136A
JZ6.2B	137A
JZ6.8B	5071A
JZ7.5B	138A
JZ8.2B	5072A
JZ9.1B	139A
JZ10B	140A
JZ11B	5074A
JZ12B	142A
JZ13B	143A
JZ14B	144A
JZ15B	145A
JZ16B	5075A
JZ17B	5076A
JZ18B	5077A
JZ19B	5078A
JZ20B	5079A
JZ22B	5080A
JZ24B	5081A
JZ25B	5082A
JZ27B	146A
JZ30B	5084A
JZ33B	147A
JZ36B	5085A
JZ39B	5086A
JZ43B	5087A
JZ47B	5088A
JZ51B	5089A
JZ56B	5090A
JZ62B	149A
JZ68B	5092A
JZ75B	5093A
JZ82B	150A
JZ91B	5095A
JZ100B	5096A
K0120SA	177
K04774	104
K071687	106
K071818-001	129
K071961-001	128
K071962-001	129
K071964-001	130
K1A5	116
K1B5	116
K1C5	116
K1D5	116
K1E5	116
K1F5	116
K1G5	116
K1H5	116
K1K5	125
K1M5	125
K1.3G22-1A	166
K1.3G22A	116
K2A5	116
K2B5	116
K2C5	116
K2CdP221B	166
K2D5	116
K2DP12	116(2)
K2E5	116
K2F5	116
K2G	116
K2G5	116
K2H5	125
K2K5	125
K3	109
K3B5	116
K3C5	116
K3D5	116
K3E	112
K3F5	116
K3G5	116
K3H5	125
K3K5	125
K3M5	125
K4-500	158
K4-501	103A
K4-505	159
K4-506	123A
K4-510	108
K4-520	104
K4-521	104
K4-525	130
K4-550	109
K4-555	116
K4-557	116
K4A5	116
K4B5	116
K4C5	116
K4D5	116
K4E5	116
K4F5	116
K4G5	116
K4H5	125

@, * — See special notes on inside back cover.

To Be Replaced	ECG Replacement
K4K5	125
K4M5	125
K5A5	116
K5B5	116
K5C5	116
K5D5	116
K5E5	116
K5F5	116
K5G5	116
K5H5	125
K5K5	125
K5M5	125
K6	109
K10	132
K10(1 Gate)	132
K11	132
K11-O	132
K11-R	132
K11-Y	132
K12	132
K12-GR	132
K12-O	132
K12-R	132
K13	132
K15-GR	132
K15-O	132
K15-R	132
K15-Y	132
K16	311
K16(1 Gate)	312
K16H	311
K16H(1 Gate)	312
K16HB	311
K16HB(1 Gate)	312
K16HC	311
K16HC(1 Gate)	312
K16S(1GATE)	312
K17	132
K17-0	132
K17A	132
K17B	132
K17BL	132
K17GR	132
K17R	132
K17Y	132
K19	453
K19(1 Gate)	453
K19BL	453
K19BL(1 Gate)	453
K19GB(1 Gate)	453
K19GC	453
K19GC(1 Gate)	453
K19GE	453
K19GR	453
K19-GR(1 Gate)	453
K19(GR)	453
K19GR(1 Gate)	453
K19(GR)(1 Gate)	453
K19H(1 Gate)	453
K19K(1 GATE)	453
K19V(1 Gate)	453
K19Y	453
K19Y(1 Gate)	453
K22	220
K22-Y	220
K22-Y	222
K22Y(1 Gate)	312
K22Y(2 Gate)	222
K22-Y(2 Gate)	222
K23	132
K23(1 Gate)	312
K23A	132
K23A(1 Gate)	312
K23A540	312
K23A-540	312
K23A-540(1 Gate)	312
K23A540(1 Gate)	312
K24	133
K24(1 Gate)	133
K24C	133
K24D	133
K24DR	133
K24E	133
K24F	133
K24G	133
K25	132
K25(1 Gate)	132
K25C	132
K25D	132
K25E	132
K25ET	132
K25F	132
K25F(1 Gate)	132
K25G	132
K30	133
K30-0(1 Gate)	132
K30(1 Gate)	132
K30A	132
K30A(1 Gate)	132
K30A-0(1 Gate)	132
K30AD	132
K30AGR(1 Gate)	132
K30AY	132
K30AY(1 Gate)	132
K30B	132
K30B(1Gate)	132
K30B(1 Gate)	132
K30C	132
K30D	132
K30GR(1 Gate)	132
K30-O	132
K30R	132
K30(Y)	132
K30-Y(1 Gate)	132
K30Y(1 Gate)	132

To Be Replaced	ECG Replacement
K30(Y)(1 Gate)	132
K31	132
K31C	132
K31C(1 Gate)	132
K32A	221
K32B	221
K32C	221
K32D	221
K33	312
K33(1 Gate)	312
K33B(1 Gate)	312
K33D(1 Gate)	312
K33D(1Gate)	312
K33E	312
K33(E)(1 Gate)	132
K33E(1 Gate)	132
K33F	132
K33F(1 Gate)	132
K33GR	132
K33GR(1 Gate)	132
K33H(1 Gate)	132
K34	132
K34(1 Gate)	132
K34B	132
K34C	132
K34C(1 Gate)	132
K34D	132
K34E	132
K34E(1 Gate)	132
K34(E)(1 Gate)	132
K34(E)	132
K34GR	132
K34GR(1 Gate)	132
K34S747	112
K35-0	133
K35-1	133
K35(1 Gate)	133
K35-2	133
K35(2 Gate)	221
K35A	133
K35BL	133
K35-BL	221
K35-BL(2 Gate)	221
K35C	133
K35G	221
K35G(2 Gate)	221
K35GN	133
K35R	133
K35Y	133
K37	132
K37H	132
K37L	132
K39	221
K39(1 Gate)	132
K39(2Gate)	222
K39E(2 Gate)	222
K39P2(2 Gate)	222
K39P(2Gate)	222
K39Q(1 Gate)	133
K39Q(2Gate)	222
K39R	221
K39R(2Gate)	222
K40	221
K40(1 Gate)	133
K40(2 Gate)	221
K40-3(1 Gate)	133
K40A	221
K40A(1 Gate)	133
K40B	221
K40B(1 Gate)	133
K40C	221
K40C(1 Gate)	133
K40D	221
K40D(1 Gate)	133
K40I(2 Gate)	221
K40K(2 GATE)	222
K40L(2 Gate)	221
K40M	221
K40ML(2 Gate)	222
K40-OR(1 Gate)	133
K41	220
K41(1 Gate)	312
K41C(1 Gate)	312
K41C(2 Gate)	221
K41D(1 Gate)	312
K41E(1 Gate)	312
K41E2(1 GATE)	312
K41F(1 Gate)	312
K41L	220
K41L(2 Gate)	221
K41(L)(2 Gate)	221
K41(L)	220
K41L(2 Gate)	221
K41M	220
K41M(2 Gate)	221
K42	132
K42(1 Gate)	132
K43(1 GATE)	133
K43 (1 Gate)	133
K44	222
K44(1 Gate)	133
K44(2gate)	222
K44(2 Gate)	222
K44C	133
K44C(1 Gate)	133
K44D(1 Gate)	133
K44W(2 Gate)	222
K45	222
K45(2 Gate)	222
K45B	220
K45B09(2 Gate)	222
K45B-09(2 Gate)	222
K45B(09)(2 Gate)	222
K45-B(2 Gate)	222
K47	132

To Be Replaced	ECG Replacement
K47(1 Gate)	132
K47M	132
K49	132
K49(2 Gate)	222
K49E(1 Gate)	312
K49E2(1 Gate)	312
K49F	132
K49H	132
K49H1	312
K49H1(1 Gate)	132
K49H(1 Gate)	312
K49H2(1 Gate)	132
K49HI(1 Gate)	132
K49HK	132
K49HK(1 Gate)	312
K49I	132
K49I(1 Gate)	312
K49M	132
K49M(1 Gate)	312
K49-OF(1 GATE)	312
K49Q (1 GATE)	132
K49Q(1 Gate)	132
K49Q(2 Gate)	222
K51(2 GATE)	222
K52	109
K53 (2 GATE)	222
K54	312
K54(1 Gate)	312
K54B(1 GATE)	312
K55	312
K55(1 Gate)	312
K55C(1 GATE)	312
K55D	312
K55D(1 Gate)	312
K55DE	312
K55-DE(1 Gate)	312
K55E	312
K55E(1 Gate)	312
K55R	312
K55R(1 Gate)	312
K59(2 Gate)	222
K59BL(2 Gate)	222
K59GR1(2Gate)	222
K59GR2 (2 Gate)	222
K59GR(2 Gate)	222
K59Y(2 Gate)	222
K59Y(2 GATE)	222
K60	109
K61	312
K61(1 Gate)	312
K61GR(1 GATE)	312
K61Y(1 Gate)	312
K66(1 GATE)	312
K66(1Gate)	312
K66Q(1GATE)	312
K68(1 Gate)	312
K68A	312
K68A(1 Gate)	312
K68A-M(1 Gate)	312
K68A(M)(1 Gate)	312
K68AM(1 Gate)	312
K68L(1 Gate)	133
K68M(1 Gate)	312
K68Y	133
K68Y(1 Gate)	312
K69(1 Gate)	312
K69A(1 Gate)	133
K69M(1 Gate)	133
K79BL(1 GATE)	312
K83	312
K83(1 Gate)	312
K84	312
K84(1 Gate)	312
K104(1 GATE)	312
K104(1Gate)	312
K104H(1 GATE)	312
K104H(1 Gate)	312
K106(1 Gate)	133
K106(1 GATE)	133
K112	113
K112C	113
K112D	114
K115J510-1	113
K115J510-2	113
K115J511-2	109
K117J460-1	113
K117J460-2	113
K118I	129
K118J966-1	114
K118J966-2	115
K118J966-4	115
K118J9663	115
K119J804-5	177
K120Y	132
K121J688-1	107
K122	113
K122C	113
K122D	114
K122J176-1	118
K122J176-2	118
K122J177P1	119
K170	132
K170R	132
K200	116
K390	221
K390(2 Gate)	221
K417-68	126
K550	312
K882	109
K1033B(1 GATE)	312
K1504	464
K1615	113
K1616	114
K1617	115
K2001	107

To Be Replaced	ECG Replacement
K2501	107
K2502	107
K2503	107
K2509	107
K4002	107
K9411A	229
K9682	159
K24154	1142
K75508-1	160
K76026	1253
K8532799	116(2)
K8533058-1	116
K8533137	113
KA4559	132
KB-062	177
KB102	177
KB-162	601
KB162	601
KB-162C5	601
KB-162C-5	601
KB-162C5A	601
KB162N	601
KB162W	601
KB162-W	601
KB-165	601
KB165	601
KB169	601
KB-169	601
KB-182	116
KB262	605
KB-262	605
KB-265	177
KB265	601
KB-265	601
KB265A	601
KB265A(Rect)	116
KB-269	601
KB269	601
KB296	601
KB-4409	801
KB4409	801
KB8339	123A
KBD005	5304
KBD02	5304
KBD04	5304
KBD06	5305
KBD08	5306
KBD10	5307
KBF-02	125(4)
KBH25-05	5322
KBH2502	5322
KBH2504	5324
KBH2506	5326
KBL005	5312
KBL02	5313
KBL04	5314
KBL06	5315
KBL08	5316
KBP005	166
KBP02	167
KBP04	168
KBP06	169
KBP08	170
KBP10	170
KBPC25-005	5322
KBPC25-02	5322
KBPC25-04	5324
KBPC25-06	5326
KBPC102	5313
KBPC104	5314
KBPC106	5315
KBPC108	5316
KBPC602	5313
KBPC604	5314
KBPC606	5315
KBPC608	5316
KBPC802	5313
KBPC804	5314
KBPC806	5315
KBPC808	5316
KBPC1005	5312
KBPC6005	5312
KBPC8005	5312
KC0.8	116
KC0.8CP11/H12/1	116(3)
KC06E11/8	116
KC08C215	116
KC-08C221	116(4)
KC08C221	116
KC08C1110	116
KC08C2219	166
KC08CP111	116(3)
KC08CP121	116(3)
KC-0691L/8	116
KC06911	116
KC1.3C	116
KC-1.3C3X11/1	116(3)
KC1.3G	116
KC1.3G12/1X2	116
KC1.3G22/12	116
KC2AP221B	166
KC2BP22/1B	116
KC2d22/1	166
KC2D221	116
KC2dp	116
KC2DP11/1412/1	116(3)
KC2dp12/1	116(2)
KC2DP12/1N	116
KC2DP22/1	116(4)
KC2DP22/1B	166
KC2dP22/1b	166
KC2DP121N	116
KC2dp122	116
KC2DP221	116
KC2DP221B	116

To Be Replaced	ECG Replacement
KC2dp221C	166
KC2G	177(3)
KC2G11/1 12/1	116
KC13C221	116
KC112A	113
KC580	1196
KC580C1	1196
KC581C	1258
KC582C	1251
KC583C	1257
KC583c	1257
KC583C	1257
KC589C1	1196
KCDP12-1	156
KCO-8CP	116
KCO-8CP11/1 12/1	116
KD27	109
KD300A	177
KD2101	102A
KD2102	123A
KD2103	116
KD2104	116
KD2114	904
KD21x5	784
KD2118	128
KD2119	108
KD2120	129
KD2121	176
KD2122(I.C.)	912
KD2122(Transistor)	102
KD2124	103
KD2130	222
KD2501	140A
KD2503	137A
KD2504	139A
KD2505	142A
KD6311	1046
KDC-80P11/1912/1	506
KDD-0013	109
KDD0015	5018A
KDD0032	116
KDD0041	519
KE-262	116
KE-1007	130
KE1007-0004-00	129
KE3684	457
KE3685	457
KE3687	457
KE3970	467
KE4091	467
KE4220	457
KE4391	467
KE4416	312
KE4856	467
KE4859	467
KE5103	457
KE5105	312
KE8841	289
KGE41007	116
KGE41054	128
KGE41055	123
KGE41061	186
KGE41959	109
KGE46109	177
KGE46146	199
KGS1000	102A
KH3403	209
KH3405	407
KH3406	408
KH3407	409
KH3408	416
KL08	5316
KLH704	123A
KLH1422	123A
KLH4567	116
KLH4745	196
KLH4746	159
KLH4763	177
KLH4781	197
KLH4792	107
KLH4793	722
KLH4794	781
KLH4795	726
KLH5353	197
KLH5489	718
KLH5807	128
KLH5808	129
KM858C	1198
KM5624	1253
KO4774	104
KPG6682	123A
KR-Q0001	102A
KR-Q0002	102A
KR-Q0004	102A
KR-Q0005	109
KR-Q1010	102A
KR-Q1011	102A
KR-Q1012	102A
KR-Q1013	123A
KS-05	116
KS-05X	116
KS030A	5065A
KS033A	5066A
KS033B	5005A
KS036A	134A
KS039A	5067A
KS043A	5068A
KS047A	5069A
KS056A	136A
KS062A	137A
KS066A	5071A
KS075A	138A
KS082A	5072A
KS091A	139A

To Be Replaced	ECG Replacement
KS30A	134A
KS30AF	134A
KS30B	134A
KS30BF	134A
KS31A	134A
KS32A	134A
KS32AF	134A
KS32B	134A
KS32BF	134A
KS34A	135A
KS34AF	135A
KS34B	135A
KS34BF	135A
KS35A	135A
KS35AF	135A
KS36A	136A
KS36AF	136A
KS36B	136A
KS36BF	136A
KS37A	137A
KS37AF	137A
KS41A	139A
KS41AF	139A
KS42A	140A
KS42AF	140A
KS42B	140A
KS42BF	140A
KS44A	142A
KS44AF	142A
KS44B	142A
KS44BF	142A
KS46	145A
KS46AF	145A
KS46BF	145A
KS100A	140A
KS100B	140A
KS110A	5074A
KS120A	142A
KS120B	142A
KS130A	143A
KS150A	145A
KS150B	145A
KS160A	5075A
KS180A	5077A
KS2030A	5065A
KS2033A	5066A
KS2033B	5005A
KS2036A	134A
KS2039A	5067A
KS2039B	134A
KS2043A	5068A
KS2047A	5069A
KS2047B	135A
KS2051A	135A
KS2051B	135A
KS2056A	136A
KS2056B	136A
KS2062A	137A
KS2062B	137A
KS2068A	5071A
KS2075A	138A
KS2082A	5072A
KS2091A	139A
KS2091B	139A
KS2100A	140A
KS2100B	140A
KS2110A	5074A
KS2120A	142A
KS2120B	142A
KS2130A	143A
KS2150A	145A
KS2150B	145A
KS2160A	5075A
KS10969-L5	7416
KS-19938	130
KS-20033L2	219
KS20180-L1	128
KS20967-L1	7400
KS20967-L2	7404
KS20967-L3	7486
KS20969-L2	7483
KS20969-L3	7492
KS20969-L4	7495
KS-20971-L1	909D
KS-21177	941M
KS21282-L1	7408
KS21282-L2	7425
KS21282-L3	7432
KSA495Y	159
KSA542-0	159
KSA542-Y	159
KSA614-0	292
KSA614Y	292
KSA634-0	187A
KSA634-Y	187A
KSA643-0	193A
KSA643-Y	193A
KSA733	294
KSA733-0	294
KSA733-Y	294
KSA733Y	294
KSA1520	198
KSC815-0	123A
KSC945-0	199
KSC945Y	199
KSC945-Y	199
KSC1096-0	186A
KSC1096-O	186A
KSC1096-Y	186A
KSC11870	229
KSC1507	198
KSC16740	229
KSC1674R	229
KSC11870	229
KSC16740	229

To Be Replaced	ECG Replacement
KSD261-0	192
KSD261-Y	192
KSD415O	287
KSD415R	287
KSD1051	130
KSD1052	280
KSD1053	280
KSD1054	280
KSD1055	130
KSD1056	130
KSD1057	280
KSD1058	280
KSD2201	280
KSD2202	280
KSD2203	181
KSD3055	181
KSD4150	287
KSD9701	284
KSD9701A	284
KSD9702	284
KSD9702A	284
KSD9703	284
KSD9703A	284
KSD9704	284
KSD9705	284
KSD9706	284
KSD9707	284
KSKE12C500	125
KSKE40C200	116
KSKE40C500	116
KSKE125C200	125
KSO33A	134A
KSO33B	134A
KSO36A	134A
KSO39A	134A
KSO39B	134A
KSO47A	135A
KSO47B	135A
KSO51A	135A
KSO56A	136A
KSO56B	136A
KSO62A	137A
KSO91A	139A
KSP1171	328
KSP1172	328
KSP1173	328
KSP1174	328
KSP1175	328
KSP1176	328
KT205	501A
KT1017	121
KTR0710C	123A
KTR0815C	123A
KTR0839C	123A
KTR0945C	199
KTR1017	299
KTR1096C	186A
KTR1687C	123A
KV1	102A
KV-1	102A
KV2	102A
KV-3(1)	601
KV4	102A
KV-4	102A
KV109G	612
KV110E	613
KV110V	613
KV112	611
KV112A	611
KV151	611
KV620	610
KV624	611
KV626	612
KV634	613
KV638	614
KV4801	610
KV4801A	610
KVR10	140A
KX-1	177
KZ6	5071A
KZ6A	5071A
KZ6ZA	5071A
KZ-8A	5072A
L14F1	3036
L14H3	3034
L32H	116
L62H	116
L82H	125
L103T1	703A
L123B1	923D
L123-T1	923
L129	960
L130	966
L131	968
L-141-B1	941D
L141T1	941
L148T1	1171
L148T2	1171
L159	912
L201	2011
L202	2012
L203	2013
L204	2014
L-417-29BLK	121
L-417-29GRN	121
L-417-29WHT	121
L-417-60	121
L532 008 012	128
L2001M3	5651
L2001M4	5651
L2001M5	5651
L2001M6	5651
L2001M7	5651
L2001M8	5651
L2001M9	5641

To Be Replaced	ECG Replacement
L4000KS	5652
L4001M3	5652
L4001M4	5652
L4001M5	5652
L4001M6	5652
L4001M7	5652
L4001M8	5652
L4001M9	5642
L5021	102A
L5022	102A
L5022A	102A
L5025	102A
L5025A	102A
L5108	160
L5121	160
L5122	160
L5181	160
L-612099	7408
L-612106	7425
L-612107	7432
L-612150	74153
L-612158	7416
L-612161	74164
L2091241-2	160
L2091241-3	160
L532000162	128
LA-120	1003
LA300	116
LA600	116
LA703E	703A
LA800	116
LA1041	1013
LA1110	1014
LA1111	1002
LA1111P	1002
LA1200	1003
LA1201	1003
LA-1201	1003
LA1201	1003
LA1201B	1003
LA1201-B2	1003
LA1201C	1003
LA1201(C)	1003
LA1201C-W	1003
LA1201FM-C	1003
LA1201T	1003
LA1201W	1003
LA1202	1003
LA1222	1227
LA1230	788
LA1240	1214
LA1310	1230
LA1342	1239
LA1353	1080
LA1355	1215
LA1363	712
LA1364	1004
LA1364N	1004
LA1365	712
LA1366N	1158
LA1367	1159
LA1368	738
LA1369	1178
LA1373	1094
LA1374	1121
LA1375	1122
LA1376	1122
LA1390	1216
LA1390B	1216
LA3018	904
LA3018A	904
LA3026	906
LA3045	912
LA3046	912
LA3049	906
LA3086	912
LA3101	1221
LA3148	727
LA3155	1215
LA3201	1179
LA3300	1005
LA3301	1006
LA-3301	1006
LA3301A	1006
LA3310	1230
LA3311	1225
LA3350	1217
LA4000	1007
LA4030	1008
LA4030P	1009
LA4031P	1010
LA4032P	1011
LA4050P	1150
LA4051P	1150
LA4100	1180
LA4101	1180
LA4102	1228
LA4400	1193
LA-4400	1193
LA4400FR	1193
LA4400Y	1211
LA-4410Y	1211
LA4420	1211
LA-4420	1211
LA4430	1211
LA40511	1150
LA44000Y	1211
LAA300	116
LAA600	116
LAA800	116
LAD010	1119

To Be Replaced	ECG Replacement
LAD011	1120
LAD-011	1120
LAP-011	1000
LAP011	1000
LAP-011	1000
LAP011	1000
LAP-012	1001
LAS723	923
LAS723B	923
LAS1505	309K
LB189-308484	163A
LB2000	9946
LB2001	9962
LB2002	9930
LB2003	9932
LB2004	9944
LB2005	9933
LB2006	9936
LB2007	9935
LB2030	9945
LB2031	9093
LB2032	9099
LB2100	9949
LB2101	9963
LB2102	9961
LB2106	9937
LB2130	9948
LB2131	9094
LB2132	9097
LB3000	7400
LB3001	7410
LB3001(Fanon)	1016
LB3002	7420
LB3003	7430
LB3004	7450
LB3005	7460
LB3006	7404
LB3008	7402
LB3009	7440
LB3060	7480
LB3150	7490
LB3175	7491
LC0.09M1115	116(2)
LC0.09M1113	506
LD128(RCA)	112
LD300	1016
LD1020	1012
LD1020A	1012
LD1041	1013
LD-1110	1014
LD1110	1014
LD3000	1015
LD3001	1016
LD3001W	1016
LD3001X	1016
LD3040	1017
LD3061	1026
LD3080	1018
LD3110	1152
LD3110A	1152
LD3120	1019
LD3141	1020
LD3141V	1020
LD3150	1021
LD-3150	1021
LD3150C	1021
LDA404	128
LDA405	128
LDA406	128
LDA408	128
LDA450	129
LDF603	456
LDF604	456
LDS200	128
LDS201	128
LED56	3028
LED56F	3028
LED-15005	9914
LED21085	9910
LED21092	9951
LH740A	940
LH740AC	940
LH6055W	7405
LJ152	159
LJ-152	159
LJ152(0)	159
LJ152-0	159
LJ152B	159
LJ152G	159
LL-2	116
LLB-23	123A
LM78L05ACH	977
LM78L05CH	977
LM78L05CZ	977
LM78L08ACH	981
LM78L08CH	981
LM78L08CZ	981
LM201AH	1171
LM201AL	1171
LM201H	1171
LM224AD	987
LM224AF	987
LM224AJ	987
LM224AN	987
LM224D	987
LM224J	987
LM224N	987
LM239AD	834
LM239AJ	834
LM239AN	834
LM301AG	1171
LM301AH	1171
LM301AL	1171
LM301AN	975

To Be Replaced	ECG Replacement
LM301AN-8	975
LM301AP	975
LM301AP1	975
LM301AT	975
LM301AV	975
LM307AN-8	976
LM307J	976
LM307N	976
LM307P	976
LM309DA	309K
LM309K	309K
LM309KC	309K
LM320MP-24	971
LM320T5.0	961
LM320T-5.0	961
LM320T6.0	963
LM320T-6.0	963
LM320T8.0	964
LM320T12	967
LM320T-12	967
LM320T15	969
LM320T-15	969
LM320T-24	971
LM320T24	971
LM324AD	987
LM324AF	987
LM324AJ	987
LM324AN	987
LM324D	987
LM324J	987
LM324N	987
LM335	309K
LM339AD	834
LM339AJ	834
LM339AN	834
LM340DA5	309K
LM340K5.0	309K
LM340T-5	960
LM340T5.0	960
LM340T-5.0	960
LM340T-5.0R	960
LM340T-6	962
LM340T6.0	962
LM340T-6.0	962
LM340T-6.0R	962
LM340T-8.0	964
LM340T8.0	964
LM340T12	966
LM340T-12	966
LM340T-12R	966
LM340T15	968
LM340T-15	968
LM340T-15R	968
LM340T24	972
LM340T-24	972
LM340T-24R	972
LM340U5	960
LM340U6	962
LM340U8	964
LM340U12	966
LM340U15	968
LM340U24	972
LM341-5	960
LM341-6	962
LM341-12	966
LM341-15	968
LM341-24	972
LM341P5.0	960
LM341P-5.0	960
LM341P-6.0	962
LM341P-8.0	964
LM341P8.0	964
LM341P-12	966
LM341P12	966
LM341P-12	966
LM341P-15	968
LM341P15	968
LM341P-15	968
LM341P-24	972
LM342P5.0	977
LM342P8.0	981
LM342P12	966
LM342P-12	966
LM342P15	968
LM370	370
LM371	371
LM377	990
LM377N	990
LM378	804
LM380	740A
LM380N	740A
LM383	1232
LM383T	1232
LM386	823
LM386N	823
LM387N	824
LM388N	828
LM390N	825
LM555C	955M
LM556	978
LM556CN	978
LM565CN	989
LM567	832
LM567C	832
LM567CN	832
LM567GN	832
LM703	703A
LM703L	703A
LM703LN	703A
LM709C	909
LM709CH	909
LM709CN	909D
LM710C	910
LM710CH	910
LM710CN	910D

To Be Replaced	ECG Replacement
LM711C	911
LM711CH	911
LM711CN	911D
LM723C	923D
LM723CD	923D
LM723CH	923
LM723CN	923D
LM725CH	925
LM741C	941
LM741CH	941
LM741CN	941M
LM746N	790
LM747C	947
LM747CD	947D
LM747CH	947
LM747CJ	947D
LM747CN	947D
LM748CH	1171
LM748CN	975
LM1011N	2003
LM1090E	123A
LM1090F	123A
LM1090G	123A
LM1110A	108
LM1110B	107
LM1117	199
LM1117C	199
LM1117D	123A
LM1120B	107
LM1120C	107
LM1123H	108
LM-1129	123A
LM-1130	123A
LM-1132	123A
LM1133	233
LM-1133	123A
LM1138	229
LM1138E	229
LM1138E/F	229
LM1138F	229
LM1138G	229
LM1138G/F	229
LM1138G/H	108
LM1138H	229
LM1138H/I	229
LM1138I	229
LM-1147	123A
LM-1148	123A
LM-1149	159
LM-1150	159
LM-1151	159
LM1153	159
LM-1153	159
LM-1154	171
LM-1155	123A
LM-1156	191
LM1157	182
LM-1157	182
LM-1158	116
LM-1159	177
LM-1160	116
LM1303	725
LM1303N	725
LM1304	718
LM1304N	718
LM1305	720
LM1305N	720
LM1307	722
LM1307N	722
LM1310	801
LM1310N	801
LM1351N	748
LM1391N	815
LM1403	123A
LM1404	159
LM1415-6	123A
LM1415-7	123A
LM1458N	778
LM1496	973
LM1496H	973
LM1496J	973D
LM1496N	973D
LM1496N(IC)	973D
LM1496N(Transistor)	123A
LM1501H	128(2)
LM1502H	129(2)
LM1540	123A
LM1540C	199
LM1566F	123A
LM1614D	123A
LM1614M	123A
LM1795	159
LM1800	743
LM1800N	743
LM1808N	826
LM1818	123A
LM1820	744
LM1820D	744
LM1820N	744
LM1829	797
LM1841N	737
LM1845	731
LM-1862	116
LM1862	116
LM1877	990
LM1877N	990
LM1877N-20	990
LM1877N-26	990
LM1932	506
LM2111	708
LM2111N	708
LM-2589	159
LM2589	159
LM2682	128
LM2701	190

To Be Replaced	ECG Replacement
LM2900N	992
LM2901J	834
LM2901N	834
LM2902J	987
LM2902N	987
LM3011H	726
LM3012	726
LM3018	904
LM3019	905
LM3028	724
LM3028A	724
LM3028B	724
LM3028BH	724
LM3039H	907
LM3045D	912
LM3045N	912
LM3046D	912
LM3046N	912
LM3053	724
LM3054	917
LM3054N	917
LM3064	780
LM3064H	780
LM3064N	783
LM3065	712
LM3065N	712
LM3065N-01	712
LM3066	728
LM3067	729
LM3067N	729
LM3070	714
LM3070N	714
LM3071	715
LM3071N	715
LM3072	790
LM3072N	790
LM3075	723
LM3075N	723
LM3086D	912
LM3086N	912
LM3089	788
LM3089N	788
LM3301N	992
LM3401N	992
LM3900N	992
LM8000	192
LM511160	181
LMT540C	199
LMZ3.3	5111A
LMZ3.3-20	5111A
LMZ3.3A	5111A
LMZ3.6	5112A
LMZ3.6-20	5112A
LMZ3.6A	5112A
LMZ3.9	5113A
LMZ3.9-20	5113A
LMZ3.9A	5113A
LMZ3.9-20	5113A
LMZ4.3	5114A
LMZ4.3-20	5114A
LMZ4.3A	5114A
LMZ4.7	5115A
LMZ4.7-20	5115A
LMZ4.7A	5115A
LMZ5.1	5116A
LMZ5.1-20	5116A
LMZ5.1A	5116A
LMZ5.6	5117A
LMZ5.6-20	5117A
LMZ5.6A	5117A
LMZ6.0	5118A
LMZ6.0-20	5118A
LMZ6.0A	5118A
LMZ6.2	5119A
LMZ6.2-20	5119A
LMZ6.2A	5119A
LMZ6.8	5120A
LMZ6.8-20	5120A
LMZ6.8A	5120A
LMZ7.5	5121A
LMZ7.5-20	5121A
LMZ7.5A	5121A
LMZ8.2	5122A
LMZ8.2-20	5122A
LMZ8.2A	5122A
LMZ8.7	5123A
LMZ8.7-20	5123A
LMZ8.7A	5123A
LMZ9.1	5124A
LMZ9.1-20	5124A
LMZ9.1A	5124A
LMZ10	5125A
LMZ10-20	5125A
LMZ10A	5125A
LMZ11	5126A
LMZ11-20	5126A
LMZ11A	5126A
LMZ12	5127A
LMZ12-20	5127A
LMZ12A	5127A
LMZ13	5128A
LMZ13-20	5128A
LMZ13A	5128A
LMZ14	5129A
LMZ14-20	5129A
LMZ14A	5129A
LMZ15	5130A
LMZ15-20	5130A
LMZ15A	5130A
LMZ16	5131A
LMZ16-20	5131A
LMZ16A	5131A
LMZ17	5132A
LMZ17-20	5132A
LMZ17A	5132A

To Be Replaced	ECG Replacement
LMZ18	5133A
LMZ18-20	5133A
LMZ18A	5133A
LMZ19	5134A
LMZ19-20	5134A
LMZ19A	5134A
LMZ20	5135A
LMZ20-20	5135A
LMZ20A	5135A
LMZ22	5136A
LMZ22-20	5136A
LMZ22A	5136A
LMZ24	5137A
LMZ24-20	5137A
LMZ24A	5137A
LMZ25	5138A
LMZ25-20	5138A
LMZ25A	5138A
LMZ27	5139A
LMZ27-20	5139A
LMZ27A	5139A
LMZ28	5140A
LMZ28-20	5140A
LMZ28A	5140A
LMZ30	5141A
LMZ30-20	5141A
LMZ30A	5141A
LMZ33	5142A
LMZ33-20	5142A
LMZ33A	5142A
LMZ36	5143A
LMZ36-20	5143A
LMZ36A	5143A
LMZ39	5144A
LMZ39-20	5144A
LMZ39A	5144A
LMZ43	5145A
LMZ43-20	5145A
LMZ43A	5145A
LMZ47	5146A
LMZ47-20	5146A
LMZ47A	5146A
LMZ51	5147A
LMZ51-20	5147A
LMZ51A	5147A
LMZ56	5148A
LMZ56-20	5148A
LMZ56A	5148A
LMZ60	5149A
LMZ60-20	5149A
LMZ60A	5149A
LMZ62	5150A
LMZ62-20	5150A
LMZ62A	5150A
LMZ68	5151A
LMZ68-20	5151A
LMZ68A	5151A
LMZ75	5152A
LMZ75-20	5152A
LMZ75A	5152A
LMZ82	5153A
LMZ82-20	5153A
LMZ82A	5153A
LMZ87	5154A
LMZ87-20	5154A
LMZ87A	5154A
LMZ91	5155A
LMZ91-20	5155A
LMZ91A	5155A
LMZ100	5156A
LMZ100-20	5156A
LMZ100A	5156A
LMZ110	5157A
LMZ110-20	5157A
LMZ110A	5157A
LMZ120	5158A
LMZ120-20	5158A
LMZ120A	5158A
LMZ130	5159A
LMZ130-20	5159A
LMZ130A	5159A
LMZ140	5160A
LMZ140-20	5160A
LMZ140A	5160A
LMZ150	5161A
LMZ150-20	5161A
LMZ150A	5161A
LMZ160	5162A
LMZ160-20	5162A
LMZ160A	5162A
LMZ170	5163A
LMZ170-20	5163A
LMZ170A	5163A
LMZ180	5164A
LMZ180-20	5164A
LMZ180A	5164A
LMZ190	5165A
LMZ190-20	5165A
LMZ190A	5165A
LMZ200	5166A
LMZ200-20	5166A
LMZ200A	5166A
LMZX3.3	5111A
LMZX3.3A	5111A
LMZX3.6	5112A
LMZX3.6A	5112A
LMZX3.9	5113A
LMZX3.9A	5113A
LMZX4.3	5114A
LMZX4.3A	5114A
LMZX4.7	5115A
LMZX4.7A	5115A
LMZX5.1	5116A
LMZX5.1A	5116A
LMZX5.6	5117A

To Be Replaced	ECG Replacement
LMZX5.6A	5117A
LMZX6.0	5118A
LMZX6.0A	5118A
LMZX6.2	5119A
LMZX6.2A	5119A
LMZX6.8	5120A
LMZX6.8A	5120A
LMZX7.5	5121A
LMZX7.5A	5121A
LMZX8.2	5122A
LMZX8.2A	5122A
LMZX8.7	5123A
LMZX8.7A	5123A
LMZX9.1	5124A
LMZX9.1A	5124A
LMZX-10	140A
LMZX10	5125A
LMZX10A	5125A
LMZX11	5126A
LMZX11A	5126A
LMZX12	5127A
LMZX12A	5127A
LMZX13	5128A
LMZX13A	5128A
LMZX14	5129A
LMZX14A	5129A
LMZX15	5130A
LMZX15A	5130A
LMZX16	5131A
LMZX16A	5131A
LMZX17	5132A
LMZX17A	5132A
LMZX18	5133A
LMZX18A	5133A
LMZX19	5134A
LMZX19A	5134A
LMZX20	5135A
LMZX20A	5135A
LMZX22	5136A
LMZX22A	5136A
LMZX24	5137A
LMZX24A	5137A
LMZX25	5138A
LMZX25A	5138A
LMZX27	5139A
LMZX27A	5139A
LMZX28	5140A
LMZX28A	5140A
LMZX30	5141A
LMZX30A	5141A
LMZX33	5142A
LMZX33A	5142A
LMZX36	5143A
LMZX36A	5143A
LMZX39	5144A
LMZX39A	5144A
LMZX43	5145A
LMZX43A	5145A
LMZX47	5146A
LMZX47A	5146A
LMZX51	5147A
LMZX51A	5147A
LMZX56	5148A
LMZX56A	5148A
LMZX60	5149A
LMZX60A	5149A
LMZX62	5150A
LMZX62A	5150A
LMZX68	5151A
LMZX68A	5151A
LMZX75	5152A
LMZX75A	5152A
LMZX82	5153A
LMZX82A	5153A
LMZX87	5154A
LMZX87A	5154A
LMZX91	5155A
LMZX91A	5155A
LMZX100	5156A
LMZX100A	5156A
LMZX110	5157A
LMZX110A	5157A
LMZX120	5158A
LMZX120A	5158A
LMZX130	5159A
LMZX130A	5159A
LMZX140	5160A
LMZX140A	5160A
LMZX150	5161A
LMZX150A	5161A
LMZX160	5162A
LMZX160A	5162A
LMZX170	5163A
LMZX170A	5163A
LMZX180	5164A
LMZX180A	5164A
LMZX190	5165A
LMZX190A	5165A
LMZX200	5166A
LMZX200A	5166A
LN362A	137A
LN75116	181
LN75497	130
LN76963	129
LN78533	223
LNA328A	5064A
LNA339A	5067A
LNA343A	5068A
LNA347A	5069A
LNA351A	5116A
LNA356A	136A
LNA368A	5071A
LNA375A	138A
LNA382A	5072A
LNA391A	139A

To Be Replaced	ECG Replacement
LNA3100A	140A
LP1H	116
LP2H	116
LP3H	116
LP4H	116
LPM3.6	134A
LPM3.6A	134A
LPM4.7	135A
LPM4.7A	135A
LPM5.6	136A
LPM5.6A	136A
LPM6.8A	5071A
LPM7.5A	138A
LPM8.2A	5072A
LPM9.1	139A
LPM9.1A	139A
LPM10A	140A
LPM11	141A
LPM11A	5074A
LPM12	142A
LPM12A	142A
LPM13	143A
LPM13A	143A
LPM15	145A
LPM15A	145A
LPM18A	5077A
LPM20A	5079A
LPM22A	5080A
LPM24A	5081A
LPM27	146A
LPM27A	146A
LPM30A	5084A
LPM33	147A
LPM33A	147A
LPM36A	5085A
LPM39A	5086A
LPM43A	5087A
LPM47A	5088A
LPM51A	5089A
LPM56	148A
LPM56A	5090A
LPM62	149A
LPM62A	149A
LPM68A	5092A
LPM75A	5093A
LPM82	150A
LPM82A	150A
LPM91A	5095A
LPM100A	5096A
LPM110	151A
LPM110A	151A
LPZT12	142A
LPZT15	145A
LPZT27	146A
LPZT33	147A
LR33H	5005A
LR39CH	134A
LR47CH	135A
LR51CH	135A
LR56C	136A
LR56CH	135A
LR62C	137A
LR62CH	137A
LR68C	5071A
LR75C	138A
LR82C	5072A
LR91C	139A
LR91CH	139A
LR100C	140A
LR100CH	140A
LR110C	5074A
LR120C	142A
LR120CH	142A
LR130C	143A
LR150C	145A
LR150CH	145A
LR160C	5075A
LR180C	5077A
LR200C	5079A
LR220C	5080A
LR240C	5081A
LR270C	146A
LR300C	5084A
LR330C	147A
LR360C	5085A
LR390C	5086A
LRB283	725
LRQ849	123A
LRR-50	116
LRR-100	116
LRR-200	116
LRR-300	116
LRR-400	116
LRR-500	116
LS-0031-AR-218	199
LS-0066	152
LS-0067	153
LS-0079-01	159
LS-0079-02	159
LS-0085-01	123A
LS-0095-AR-213	199
LS-0095-AR-213	199
LS52	104
LS370	370
LS371	371
LS555	955M
LS555-2	978
LS1496	973
LS3705	123A
LS5484	132
LS5485	132
LSM-13L	3024
LSM-13L-50	3024
LSM-23L	3021
LSM-23L-50	3021

To Be Replaced	ECG Replacement
LSM-23L-A	3021
LST5253	3024
LST5353	3021
LST5753	3022
LT1016	108
LT1016D	108
LT1016E	108
LT1016H	229
LT1016I	108
LTE1016	229
LTE1016(G.E.)	108
LTH1016	229
LTH1016(G.E.)	108
LTI1016	107
LU2N544	126
LVA43A	5068A
LVA47A	5069A
LVA51A	5116A
LVA56A	136A
LVA68A	5071A
LVA75A	138A
LVA82A	5072A
LVA91A	139A
LVA100A	140A
LVA156A	136A
LVA162	137A
LVA168	5071A
LVA343A	5068A
LVA351A	5116A
LVA356A	136A
LVA368A	5071A
LVA375A	138A
LVA382A	5072A
LVA391A	139A
LVA456A	136A
LVA462	137A
LVA468	5071A
LVA3100A	140A
LZ 4.7	135A
LZ5.6	136A
LZ10	140A
M-0027	116
M012	108
M024	108
M094-585-46	159
M08047L1	159
M0C1000	3040
M0C1001	3040
M0C1002	3040
M0C1100	3041
M0C1200	3041
M0C3011	3047
M0C8030	3044
M0C8050	3045
M1-301	177
M1C946-5D	9946
M1C962-5D	9962
M1H	116
M1S-12795B	130
M1X	128
M2N168A	101
M3d1	548
M3D15	548
M3D18	543
M3D22	543
M3D29	548
M4HZ	116
M4Z3.3	134A
M4Z3.3A	134A
M4Z3.9	134A
M4Z3.9A	134A
M4Z4.7	135A
M4Z4.7-20	135A
M4Z4.7A	135A
M4Z5.1	135A
M4Z5.1-20	135A
M4Z5.1A	135A
M4Z5.6	136A
M4Z5.6-20	136A
M4Z5.6A	136A
M4Z6.2	137A
M4Z6.2-20	137A
M4Z6.2A	137A
M4Z9.1	139A
M4Z9.1-20	139A
M4Z9.1A	139A
M4Z10	140A
M4Z10-20	140A
M4Z10A	140A
M4Z12	142A
M4Z12-20	142A
M4Z12A	142A
M4Z15	145A
M4Z15-20	145A
M4Z15A	145A
M4Z27	146A
M4Z27-20	146A
M4Z27A	146A
M4Z33	147A
M4Z62	149A
M4Z62A	149A
M4Z82	150A
M4Z110	151A
M5S000P	74S00
M5S003P	74S03
M5S004P	74S04
M5S005P	74S05
M5S010P	74S10
M5S011P	74S11
M5S015P	74S15
M5S020P	74S20
M5S022P	74S22
M5S030P	74S30
M5S040P	74S40
M5S051P	74S51

To Be Replaced	ECG Replacement
M5S074P	74S74
M5S112P	74S112
M5S113P	74S113
M5S114P	74S114
M5S133P	74S133
M5S138P	74S138
M5S151P	74S151
M5S153P	74S153
M5S157P	74S157
M5S158P	74S158
M5S174P	74S174
M5S175P	74S175
M5S181P	74S181
M5S251P	74S251
M5S258P	74S258
M6HZ	116
M8D03	727
M8D03(Motorola)	727
M8HZ	125
M9Z	139A
M10Z	140A
M12	116
M12Z	142A
M14	116
M14(Triac)	5662
M15(Triac)	5663
M15Z	145A
M16(Triac)	5666
M21C	5404
M21C1R	5404
M21C/Q	5404
M21C/R	5404
M21C/Y	5404
M21CQ	5404
M21CY	5404
M21Y	5404
M22	116
M24	123A
M24A	123A
M24B	123A
M24(Triac)	5662
M25	123A
M25A	123A
M25B	123A
M25B2	123A
M25(Triac)	5663
M26	177
M26(Triac)	5666
M27Z	146A
M-31	116
M34A	109
M42	116
M51	109
M54	123A
M54A	123A
M54B	123A
M54BLK	123A
M54BLU	123A
M54BRN	123A
M54C	123A
M54D	123A
M54E	123A
M54GRN	123A
M54ORN	123A
M54RED	123A
M54WHT	123A
M54YEL	123A
M60	109
M62	116
M65A	159
M65B	159
M65C	159
M65D	159
M65E	159
M65F	159
M67	116
M67A	116
M67B	116
M67C	116
M68	116
M68A	116
M68B	116
M68C	116
M69	116
M69A	116
M69B	116
M69C	116
M70	116
M70A	116
M70B	116
M70C	116
M71	116
M71A	116
M71B	116
M71C	116
M72	125
M72A	125
M72B	125
M72C	125
M72D	156
M73	125
M73A	125
M73B	125
M73C	125
M76	160
M77	160
M78	160
M78A	160
M78B	160
M78BLK	160
M78C	160
M78D	160
M78GRN	160
M78RED	160
M78YEL	160

To Be Replaced	ECG Replacement
M82	125
M84	104
M84B	121
M85	5673
M85(Triac)	5673
M86	5675
M86(Triac)	5675
M87	5675
M87(Triac)	5675
M91	107
M91A	123A
M91A01	116
M91A02	116
M91A03	116
M91A06	125
M91B	123A
M91BGRN	123A
M91C	123A
M91CM624	123A
M91D	123A
M91E	123A
M91F	123A
M91FM624	123A
M92	5673
M92(Triac)	5673
M93	5675
M93(Triac)	5675
M94	5675
M94(Triac)	5675
M95	109
M98	5683
M98E33	160
M98(Triac)	5683
M99	5684
M99(Triac)	5684
M100(Triac)	5685
M100(Zener)	133
M101	133
M102	125
M104	5683
M104(Triac)	5683
M105	5684
M105(Triac)	5684
M106	5685
M106(Triac)	5685
M107	463
M108	102A
M112(Triac)	5641
M113HA	282
M113(Triac)	5642
M114	464
M116	465
M117	465
M124J779-1	116
M128J422-1	120
M-128J509-1	161
M-128J510-1	107
M-128J511-3	161
M128J753	120
M135	138A
M140-1	107
M140-3	123A
M150	116
M150-1	177
M172A	116
M204B	116(4)
M300-1300A	128
M304/4050	755
M351	160
M401	161
M433	172A
M446	159
M447	123A
M500	116
M500A	116
M500B	116
M500C	116
M501	121
M511-035-0001	923
M530	128
M546	161
M552-AR35X	187A
M552AR35X	187A
M604	166
M604HT	116
M612	161
M613	161
M614	161
M644	159
M652P1C	129
M670	116
M670A	116
M670B	116
M670C	116
M671	123A
M680	116
M680A	116
M680B	116
M680C	116
M690	116
M690A	116
M690B	116
M690C	116
M700	116
M700A	116
M700B	116
M700C	116
M701B	116
M702	125
M702B	125
M702C	116(2)
M710	116
M710A	116
M710B	116
M710C	116

To Be Replaced	ECG Replacement
M720	125
M720A	125
M720B	125
M720C	125
M726	269
M730	125
M730A	125
M730B	125
M730C	125
M758	136A
M773	123A
M773RED	123A
M774	123A
M774ORN	123A
M775	123A
M775BRN	123A
M776	123A
M776GRN	123A
M779	123A(2)
M779BLU	123A
M780	123A(2)
M780WHT	123A
M783	123A
M783RED	123A
M784	123A
M784ORN	123A
M785	123A
M785YEL	123A
M786	123A(2)
M787	123A(2)
M787BLU	123A
M791	123A
M818	123A
M818WHT	123A
M819	154
M822	123A
M822A	123A
M822A-BLU	123A
M822B	123A
M823	123A
M823B	123A
M823WHT	123A
M827	123A
M827BRN	123A
M828	129
M828GRN	123A
M829A	159
M829B	159
M829C	159
M829D	159
M829E	159
M829F	159
M833	159
M844	184
M847BLK	123A
M852	184
M912	157
M-1002-2	123A
M-1002-17 NC	123A
M1301	177
M1391P	815
M1400-1	107
M2002	724
M2003	912
M2009	796
M2016	912
M2028	774
M2032	916
M2032-330	916
M2032-330-BA	916
M2077	1115A
M2207	5071A
M2497	116
M3016	116
M3519	123A
M3567-2	184
M4206	121
M4246	121
M4313	102A
M4315	102A
M4327	102
M4331	121
M4363	126
M4363BLU	126
M4363GRN	126
M4363ORN	126
M4363WHT	126
M4364	126
M4365	126
M4366	126
M4367	126
M4368	126
M4388	126
M4389	100
M4398	102A
M4439	160
M4442	159
M4450	158
M4454	126
M4456	126
M4457	126
M4459	127
M4462	102A
M4463	104
M4464	123A
M4465	123A
M4466	102A
M4466ORN	158
M4468	102A
M4468BRN	158
M4469	102A
M4469RED	158
M4470	102A
M4470ORN	158
M4471	102A

To Be Replaced	ECG Replacement
M4471YEL	158
M4472	102A
M4472GRN	158
M4473	158
M4474	102A
M4474YEL	158
M4475	102A
M4475GRN	158
M4476	102A
M4476BLU	158
M4477	102A
M4477PUR	158
M4478	129
M4482	102
M4483	102
M4484	160
M4485	160
M4486	160
M4501	126
M4504	160
M4506	160
M4507	160
M4509	126
M4510	158
M4524	160
M4525	159
M4526	160
M4545	126
M4545BLU	126
M4545WHT	126
M4552	144A
M4553	102A
M4553BLU	102A
M4553BRN	102A
M4553GRN	102A
M4553ORN	102A
M4553PUR	105
M4553RED	102A
M4553YEL	102A
M4562	158
M4563	102A
M4564	102A
M4565	102A
M4567	102
M4570	104
M4573	102A
M4573(Blu)	102A
M4582	121
M4582BRN	121
M4583	121
M4583RED	121
M4584	121
M4584GRN	121
M4586	126
M4589	126
M4590	159
M4594	123A
M4595	102A
M4596	102
M4597	102
M4597GRN	102
M4597RED	102
M4603	126
M4604	126
M4605	126
M4605RED	126
M4606	121
M4607	102
M4608	121
M4619	104
M4619RED	121
M4620	104
M4620GRN	121
M4621	126
M4622	105
M4623	127
M4624	123A
M4627	102
M4630	123A
M4632	126
M4640	179
M4640P	179
M4648	154
M4649	104
M4652	127
M4653	139A
M4659	144A
M4661	121
M4663	147A
M4689	128
M4697	160
M4699	150A
M4700	101
M4701	179
M4702	179
M4704	150A
M4705	123A
M4709	108
M4714	123A
M4715	130
M4722	121
M4722BLU	121
M4722GRN	121
M4722ORN	5483
M4722PUR	121
M4722RED	121
M4722YEL	121
M4727	104
M4728	151A
M4730	121
M4732	123A
M4733	108
M4734	123A
M4737	123A
M4739	123A

To Be Replaced	ECG Replacement
M4745	159
M4756	161
M4757	107
M4765	123A
M4766	121
M4767	121
M4768	123A
M4789	107
M4815	159
M4815D	159
M4819	154
M4820	108
M4821	123A
M4825	107
M4826	108
M4834	123A
M4837	108
M4838	154
M4839	154
M4840	123A
M4840A	107
M4841	123A
M4842	123A
M4842A	123A
M4842C	123A
M4843	154
M4844	123A
M4845	108
M4850	141A
M4851	141A
M4852	123A
M4853	154
M4854	123A
M4855	108
M4857	108
M4858	147A
M4860	160
M4872	124
M4882	130
M4885	124
M4888	121
M4888A	121
M4888B	121
M4898	123A
M4900	162
M4901	163A
M4904	107
M4906	123A
M4926	123A
M4927	154
M4933	123A
M4935	123A
M4937	123A
M4937(3rd IF)	233
M4943	159
M4974	104
M4974/P1R	104
M4989	159
M4995	163A
M4998	157
M5101	1095
M5101P	1095
M5106	1097
M5106P	1097
M5108	1099
M5108-9170	1099
M5108P	1099
M5109P	917
M5112	1098
M5112Y	1098
M5113	704
M5113T	704
M5115	1110
M5115P	1110
M5115P-9085	1110
M5115PA	1110
M5115PR	1110
M5115PRA	1110
M5115RP	1156
M5131P	1096
M5133P	913
M5134	1096
M5134-8266	1096
M5134P	1096
M5135P	1004
M5141T	941
M5143	712
M5143P	712
M5146P	1308
M5152L	1170
M5153	801
M5153P	801
M5155P	1126
M5169	747
M5169P	747
M5171	346
M5176P	747
M5183	749
M5183-8098	749
M5183P	749
M5190	738
M5190P	738
M5191P	1050
M5192P	1183
M5285	102A
M5304	7460
M5304P	7460
M5310	7430
M5310P	7430
M5327P	7473
M5352	7450
M5352P	7450
M5362	7442
M5362P	7442
M5372	7472

To Be Replaced	ECG Replacement
M5372P	7472
M5374	7474
M5374P	7474
M5375	7470
M5375P	7470
M5395	7495
M5395P	7495
M5930	9930
M5930P	9930
M5932	9932
M5932P	9932
M5933	9933
M5933P	9933
M5935	9935
M5935P	9935
M5936	9936
M5936P	9936
M5937	9937
M5937P	9937
M5944	9944
M5944P	9944
M5945	9945
M5945P	9945
M5946	9946
M5946P	9946
M5948	9948
M5948P	9948
M5949	9949
M5949P	9949
M5952	9099
M5952P	9099
M5953	9093
M5953P	9093
M5955P	9097
M5956	9094
M5956P	9094
M5961	9961
M5961P	9961
M5962	9962
M5962P	9962
M5963	9963
M5963P	9963
M7002	154
M7003	123A
M7014	123
M7015	123A
M7031	121
M7033	123A
M7108	123A
M7108/A5N	123A
M7109	123A
M7109/A5P	123A
M7127	159
M7127/P2S	159
M7171	123A
M7310	197
M7342	127
M7342/P4F	127
M7476	191
M7511	163A
M7543-1	130
M7641	7473
M8014(Transistor)	100
M8062A	102A
M8062B	102A
M8062C	102A
M8105	123A
M8116	126
M8120	101
M8124	160
M8221	123A
M8222	116
M8399	116
M8482	112
M8482C	112
M8485	109
M8489	519
M8489-A	109
M8489A	519
M8513	600
M8513-0	601
M8513A	601
M8513A0	600
M8513A-0	601
M-8513-A-01	600
M8513A-R	600
M8513A0	600
M8513(Lafayette)	600
M8513-0	519
M8513R	600
M8513-R	601
M8515	139A
M8569	178MP
M8604	102A
M8604A	102A
M8640	158
M8640A	158
M8640E(C-M)	177
M8640E(Transistor)	158
M-8641	123A
M-8641A	158
M9002	158
M9002(Red)	123A
M9003	160
M9003(Brn)	160
M9003(Grn)	160
M9003(Org)	160
M9003(Wht)	160
M9009	160
M9010	108
M9019	121
M9032	107
M9038	160
M9050	129
M9052	195A
M9058	160
M9059	123A
M9070	123A
M9075	103A
M9080	160
M9081	160
M9083	121
M9090	127
M9091	121
M9092	103
M9093	103
M9095	123A
M9096	123A
M9098	160
M9104	121
M9105	102A
M9105(Blu)	102A
M9108	160
M9110	123A
M9118	104
M9125	195A
M9126	158
M9136	123A
M9138	128
M9141	121
M9142	121
M9144	123A
M9145	129
M9147	195A
M9148	102
M9159	123A
M9160	158
M9168	126
M-9169	126
M9169	160
M9170	128
M9174	195A
M9177	176
M9181	179
M9184	128
M9186	195A
M9187	195A
M9190	160
M9197	199
M9198	102A
M9199	123A
M9202	121
M9206	116
M9209	128
M9214	103
M9221	128
M9225	175
M9226	123A
M9228	128
M9235	116
M9237	121
M9241	121
M9242	101
M9244	130
M9245	123A
M9246	108
M9251	105
M9252	108
M9255	121
M9256	6401
M9257	129
M9258	160
M9259	130
M9260	195A
M9263	121
M9264	6400
M9265	198
M9266	161
M9269	199
M9271	195A
M9274	175
M9278	130
M9282	123
M9285	195A
M9286	198
M9287	124
M9288	126
M9293	199
M9294	121
M9299	123A
M9301	175
M9302	130
M9306	314
M9308	129
M9309	175
M9312	116
M9314	116
M9316	175
M9317	116
M9319	116
M9320	198
M9321	130
M9323	123A
M9325	123A
M9329	199
M9334	159
M9338	199
M9342	121
M9344	180
M9347	179
M9348	153
M9355	195A
M9357	123A
M9359	180
M9363	128
M9366	123A
M9375	179
M9377	123A
M9378	123A
M9380	128
M9384	199
M9385	6409
M9389	289
M9390	123A
M9393	175
M9398	129
M9400	129
M9408	162
M9409	199
M9412	234
M9416	199
M9418	123A
M9420	121
M9426	129
M9430	195A
M9431	195A
M9432	129
M9435	129
M9436	121
M9447	199
M9450	161
M9453	123A
M9458	121
M9465	198
M9467	234
M9474	199
M9475	123
M9480	181
M9481	161
M9482	108
M9483	107
M9486	199
M9491	128
M9514	159
M9515	130
M9517	121
M9519	128
M9520	129
M9521	192
M9525	123A
M9526	159
M9527	159
M9531	159
M9532	123A
M9536	225
M9547	199
M9550	121
M9556	184
M9561	128/401
M9562	293
M9563	297
M9565	133
M9568	123A
M9570	123A
M9571	159
M9575	108
M9576	152
M9580	350
M9582	184
M9583	351
M9586	359
M9587	350
M9588	348
M9590	6409
M9591	128
M9594	199
M9599	311
M9610	175
M9616	359
M9617	359
M9618	184
M9622	353
M9623	354
M9624	355
M9625	356
M9627	158
M9628	181
M9629	181
M9631	128
M9639	181
M9640	188
M9641	189
M9642	123AP
M9649	159
M9659	350
M9661	152
M9665	320
M9666	223
M9671	281
M9675	123A
M9676	196
M9676/NPN	196
M9677	197
M9677/PNP	197
M9701	197
M9703	128
M9711	320
M9715	181
M9740	366
M9741	366
M9755	367
M9765	350
M9773	316
M9775	351
M9781	356
M9810	121
M9814	105
M9818	123
M9824	102
M9826	100
M9827	123
M9828	128
M9829	160
M9830	160
M9831	108
M9832	108
M9834	159
M9835	128
M9841	100
M9842	100
M9843	102
M9846	121
M9848	121
M9850	102
M9852	102
M9853	160
M9854	121
M9855	121
M9856	179
M9857	179
M9858	179
M9859	179
M9860	179
M9861	179
M9862	179
M9863	179
M9864	179
M9865	179
M9866	160
M9867	126
M9874	213
M9875	213
M9882	123A
M9883	160
M9884	123A
M9897	123A
M9898	213
M9904	104
M9906	102
M9908	179
M9909	105
M9910	105
M9921	102A
M9930	175
M9950	121
M9961	179
M9964	159
M9981	126
M31001	123A
M41223-2	116
M51124	1098
M51171L	1301
M51247	1173
M51247P	1173
M51355P	1004
M51513L	1256
M51521	1170
M51521L	1170
M51709T	909
M51725L	1300
M51841P	955M
M53200	7400
M53200P	7400
M53201	7401
M53201P	7401
M53202	7402
M53202P	7402
M53203	7403
M53203P	7403
M53204	7404
M53204P	7404
M53205	7405
M53205P	7405
M53206P	7406
M53207P	7407
M53208P	7408
M53209P	7409
M53210	7410
M53210P	7410
M53213P	7413
M53214P	7414
M53216P	7416
M53217P	7417
M53220	7420
M53220P	7420
M53225P	7425
M53227P	7427
M53230	7430
M53230P	7430
M53237P	7437
M53238P	7438
M53240	7440
M53240P	7440
M53241	7441
M53241P	7441
M53242	7442
M53242P	7442
M53243	7443
M53243P	7443
M53244	7444
M53244P	7444
M53245P	7445
M53247	7447
M53247P	7447
M53248	7448
M53248A	7448
M53248P	7448
M53250	7450
M53250P	7450
M53253	7453
M53253P	7453
M53260	7460
M53260P	7460
M53270	7470
M53270P	7470
M53272	7472
M53272P	7472
M53273	7473
M53273P	7473
M53274	7474
M53274P	7474
M53275	7475
M53275P	7475
M53276	7476
M53276P	7476
M53280	7480
M53280P	7480
M53283	7483
M53283P	7483
M53284	7484
M53284P	7484
M53285P	7485
M53286	7486
M53286P	7486
M53289P	7489
M53290	7490
M53290P	7490
M53291	7491
M53291P	7491
M53292	7492
M53292P	7492
M53293	7493A
M53293P	7493A
M53295	7495
M53295P	7495
M53296	7496
M53296P	7496
M53307	74107
M53307P	74107
M53321	74121
M53321P	74121
M53322P	74122
M53323P	74123
M53325P	74125
M53326P	74126
M53332P	74132
M53345P	74145
M53350P	74150
M53351	74151
M53351P	74151
M53353P	74153
M53354N	74154
M53354P	74154
M53355P	74155
M53356P	74156
M53360P	74160
M53361P	74161
M53362P	74162
M53363P	74163
M53364P	74164
M53365P	74165
M53366P	74166
M53370P	74170
M53374P	74174
M53375P	74175
M53380	74180
M53380P	74180
M53381P	74181
M53382P	74182
M53390P	74190
M53391P	74191
M53392	74192
M53392P	74192
M53393	74193
M53393P	74193
M53398P	74198
M53399P	74199
M75205-1	5870
M75205-2	5871
M75516-2	160
M75516-2P	160
M75516-2R	160
M75517-1	102A
M75517-2	102A
M-75536-1	128
M-75536-2	128
M75537-2	176
M75543-1	152
M75545-1	161
M75547-1	108
M75547-2	108
M75549-2	130
M-75557-1	123A
M-75557-2	123A
M-75557-3	123A
M-75557-4	123A
M-75557-5	123A
M-75557-6	123A
M75561-7	102A
M75561-8	129
M75561-10RK	220
M75561-17	129
M75561-23	221
M75561-23RN	221
M75565-1	123
M100449	358
M105064	120
M105330	358
M109474	113
M755162-P	160
M755162-R	160
M8534992	113
M-P3D	102
MA1	160
MA2	116
MA3	109
MA8	109
MA10	172A
MA23	604
MA23A	604
MA-23B	109
MA23B	604
MA-23B	604
MA23 (TRAN)	102A
MA25	604
MA25A	604
MA-25A	604
MA25SR	102A
MA25(TRAN)	102A
MA26	601
MA-26	601
MA-26-1	601
MA26A	601
MA26G	601
MA26W	605
MA26W0	601
MA26WA	605
MA26WB	605
MA26WD	605
MA26WO	605
MA51A	109
MA55	109
MA61	6408
MA62	6408
MA90	109
MA100	100
MA101	116
MA102	116
MA110	116
MA112	158
MA113	158
MA114	158
MA115	158
MA116	158
MA117	158
MA140	177
MA-150	177
MA150	177
MA150LF	177
MA-153	177
MA161	177
MA-161	177
MA161C	519
MA162	177
MA203	116
MA206	102A
MA211	116
MA215	116
MA240	102A
MA242	116
MA242RC	156
MA286	100
MA287	100
MA288	100
MA301	612
MA302	613
MA303	614
MA320	612
MA330	611
MA332	613
MA350	116
MA351	116
MA393	102A
MA393A	102A
MA393B	102A
MA393C	102A
MA393E	102A
MA393G	102A
MA393R	102A
MA729	720
MA732	718
MA737	705A
MA746	790
MA767	722
MA767PC	722
MA780	714
MA781	715
MA815	102A
MA881	102A
MA882	102A
MA883	102A
MA884	102A
MA885	102A
MA886	102A
MA887	102A
MA888	102A
MA889	102A
MA890	102A
MA891	102A
MA892	102A
MA893	102A
MA894	102A
MA895	102A
MA896	102A
MA897	102A
MA898	102A
MA899	102A
MA900	102A
MA901	102A
MA902	102A
MA903	102A
MA904	102A
MA909	102A
MA910	102A
MA1047	5069A
MA1051	135A
MA1056	136A
MA1062	137A
MA1068	5071A
MA1075	138A
MA1082	5072A
MA1091	139A
MA-1091	139A
MA1100	140A
MA1110	5074A
MA1120	142A
MA1130	143A
MA1150	145A
MA1180	5077A
MA1220	5080A
MA1240	5081A
MA1318	102A
MA1700	102
MA1702	158
MA1703	158
MA1704	158
MA1705	126
MA1706	158
MA1707	158
MA1708	158
MA3065	712
MA3065PC	712
MA4388	612
MA4670	121
MA6301	1120
MA6301T	1120
MA6875	288
MA9426	123A
MA45071	612
MA45111	610
MA45112	611
MA45114	613
MA45115	614
MA45131	610
MA45132	611
MA45134	613
MA45151	612
MA45158	610
MA45160	611
MA45161	612
MA45168	610
MA45171	612
MA451670	611
MA-ID	506
MAA504	909D
MAC2-1	5660
MAC2-2	5661
MAC2-3	5662
MAC2-4	5663
MAC2-5	5664
MAC2-6	5665
MAC2-7	5666
MAC2-8	5667
MAC5-1	5660
MAC5-2	5661
MAC5-3	5662
MAC5-4	5663
MAC5-5	5664
MAC5-6	5665
MAC5-7	5666
MAC5-8	5667
MAC10-1	5611
MAC10-2	5612
MAC10-3	5613
MAC10-4	5614
MAC10-5	5615
MAC10-6	5616
MAC10-7	5617
MAC10-8	5618
MAC11-1	5621
MAC11-2	5622
MAC11-3	5623
MAC11-4	5624
MAC11-5	5625
MAC11-6	5626
MAC11-7	5627
MAC11-8	5628
MAC15-4	56004
MAC15-5	56006
MAC15-6	56006
MAC15-7	56008
MAC15-8	56008
MAC15-9	56010
MAC15-10	56010
MAC15A-4	56004
MAC15A-5	56006
MAC15A-6	56006
MAC15A-7	56008
MAC15A-8	56008
MAC15A-9	56010
MAC15A-10	56010
MAC25A	56014
MAC36-1	5680
MAC36-2	5681
MAC36-3	5682
MAC36-4	5683
MAC36-5	5684
MAC36-6	5685
MAC36-7	5686
MAC77-1	5600
MAC77-2	5601
MAC77-3	5602
MAC77-4	5603
MAC77-5	5604
MAC77-6	5605
MAC77-7	5606
MAC77-8	5607
MAC5569	5673
MAC5570	5675
MAC5573	5673
MAC5574	5675
MAC40798	5677
MAI200	5079A
MAN1	3050
MAN1A	3050
MAN10A	3050
MAN51A	3054
MAN52A	3063
MAN54A	3059
MAN71A	3052
MAN72A	3061
MAN73A	3065
MAN74A	3056
MAN81A	3055

To Be Replaced	ECG Replacement
MAN82A	3064
MAN84A	3060
MAN101	3051
MAN101A	3051
MAN1001	3051
MAN1001A	3051
MAN3610A	3053
MAN3620A	3062
MAN3640A	3058
MAN4610A	3070
MAN4640A	3071
MAN4710A	3068
MAN4740A	3069
MAN6710	3074
MAN6730	3076
MAN6740	3075
MAN6750	3077
MAN6760	3078
MAN6780	3079
MAQ7786	123A
MAS20	126
MAS21	126
MAS22	126
MAS23	126
MB01	116
MB-1D	506
MB-1F	506
MB-10	506
MB74LS00	74LS00
MB74LS02	74LS02
MB74LS03	74LS03
MB74LS04	74LS04
MB74LS05	74LS05
MB74LS08	74LS08
MB74LS10	74LS10
MB74LS11	74LS11
MB74LS14	74LS14
MB74LS20	74LS20
MB74LS30	74LS30
MB74LS32	74LS32
MB74LS42	74LS42
MB74LS51	74LS51
MB74LS74A	74LS74A
MB74LS83A	74LS83A
MB74LS85	74LS85
MB74LS86	74LS86
MB74LS107	74LS107
MB74LS109A	74LS109A
MB74LS123	74LS123
MB74LS136	74LS136
MB74LS138	74LS138
MB74LS151	74LS151
MB74LS153	74LS153
MB74LS157	74LS157
MB74LS161A	74LS161A
MB74LS164	74LS164
MB74LS174	74LS174
MB74LS175	74LS175
MB74LS191	74LS191
MB74LS193	74LS193
MB74LS195A	74LS195A
MB74LS221	74LS221
MB74LS253	74LS253
MB74LS257	74LS257
MB74LS266	74LS266
MB74LS280	74LS280
MB74LS367	74LS367
MB244	116
MB257	116
MB258	116
MB269	116
MB270	116
MB400	7400
MB401	7410
MB402	7420
MB403	7430
MB404	7440
MB405	7450
MB406	7460
MB407	7472
MB408	7480
MB410	74107
MB411	7453
MB416	7401
MB417	7402
MB418	7404
MB420	7474
MB433	7438
MB434	7438
MB435	7437
MB440	74123
MB442	7442
MB443	74145
MB445	74151
MB447	74180
MB448	7485
MB449	7486
MB450	74161
MB451	74160
MB452	7496
MB453	7495
MB454	7491
MB455	74198
MB456	74191
MB457	74190
MB458	74181
MB459	74182
MB460	74170
MB461	7489
MB513A-R	177
MB513AR	177
MB601	7400
MB602	7410
MB603	7420
MB604	7430

To Be Replaced	ECG Replacement
MB605	7440
MB606	7450
MB607	7460
MB609	7472
MB613	74H53
MB614	74H21
MB618	74H78
MB3104	1195
MB3202	1082
MB3710	1194
MB3756	1271
MB4011	4011B
MB4027	4027B
MB4520	4520B
MB4522	4522B
MB4527	4527
MB4539	4539B
MB4555	4555B
MB4556	4556B
MB6356	5073
MB84000	4000
MB84001	4001B
MB84002	4002B
MB84007	4007B
MB84011	4011B
MB84011M	4011B
MB84011U	4011B
MB84011-U	4011B
MB84011V	4011B
MB84012	4012B
MB84013	4013B
MB84014	4014B
MB84015	4015B
MB84016	4016B
MB84017	4017B
MB84019	4019B
MB84020	4020B
MB84021	4021B
MB84023	4023B
MB84024	4024B
MB84025	4025B
MB84027	4027B
MB84028	4028B
MB84029	4029B
MB84030	4030B
MB84040	4040B
MB84042	4042B
MB84049	4049B
MB84050	4050B
MB84051	4051B
MB84052	4052B
MB84055	4055B
MB84068	4068B
MB84069	4069
MB84071	4071B
MB84077	4077B
MB84078	4078B
MB84081	4081B
MB84085	4085B
MB84086	4086B
MB84099	4099B
MB84512	4512B
MB84518	4518B
MB840085	40085B
MB840097	40097B
MB840098	40098B
MB840160	40160B
MB840161	40161B
MB840162	40162B
MB840163	40163B
MB840174	40174B
MB840175	40175B
MB840192	40192B
MB840193	40193B
MB840194	40194B
MB840195	40195B
MBD101	112
MBS4991	6403
MC010	116
MC015	116
MC020	116
MC020A	116
MC021	116
MC021A	116
MC022	116
MC022A	116
MC023	116
MC023A	116
MC025	116
MC030	116
MC030A	116
MC030B	116
MC035	116
MC040	116
MC040A	116
MC070	125
MC070A	125
MC080	125
MC080A	125
MC090	125
MC090A	125
MC1Y	601
MC2	177
MC10	611
MC19	116
MC22	613
MC78L05	977
MC78L05ACP	977
MC78L05C	977
MC78L05CP	977
MC78L06AV	988
MC78L08	981
MC78L08ACP	981
MC78L08CP	981
MC78M05CP	960

To Be Replaced	ECG Replacement
MC78M06CP	962
MC78M08CP	964
MC78M12CP	966
MC78M15CP	968
MC78M24CP	972
MC100	610
MC100A	610
MC101	160
MC103	160
MC106	610
MC106A	610
MC112	610
MC112A	610
MC115	613
MC115A	613
MC116	614
MC116A	614
MC170	116
MC201	612
MC308	109
MC407	610
MC410	611
MC456	116
MC607	610
MC610	611
MC660P	9660
MC661P	9661
MC662P	9662
MC663P	9663
MC664P	9664
MC665P	9665
MC666P	9666
MC667P	9667
MC668P	9668
MC669P	9669
MC670P	9670
MC671P	9671
MC672P	9672
MC673P	9673
MC674P	9674
MC675P	9675
MC676P	9676
MC677P	9677
MC678P	9678
MC679P	9679
MC680P	9680
MC681P	9681
MC682P	9682
MC683P	9683
MC684P	9684
MC685P	9685
MC686P	9686
MC688P	9688
MC689P	9689
MC690P	9690
MC691P	9691
MC696P	9696
MC700G	9900
MC703G	9903
MC704G	9904
MC705G	9905
MC706G	9906
MC707G	9907
MC708G	9908
MC709G	9909
MC710G	9910
MC711G	9911
MC712G	9912
MC713G	9913
MC714G	9914
MC715G	9915
MC717P	9917
MC721G	9921
MC723G	9923
MC723P	9923
MC724P	9924
MC726G	9926
MC727G	9927
MC774G	9974
MC776P	9976
MC789	9989
MC789G	9989
MC789P	9989
Mc789P	9989
MC800G	9900
MC803G	9903
MC804G	9904
MC805G	9905
MC806G	9906
MC807G	9907
MC808G	9908
MC809G	9909
MC810G	9910
MC811G	9911
MC812G	9912
MC813G	9913
MC814G	9914
MC815G	9915
MC817P	9917
MC821G	9921
MC823G	9923
MC824P	9924
Mc824P	9924
MC826G	9926
MC827G	9927
MC830L	9930
MC830P	9930
MC831L	9931
MC831P	9931
MC832L	9932
MC832P	9932
MC833L	9933
MC833P	9933
MC835L	9935

To Be Replaced	ECG Replacement
MC835P	9935
MC836L	9936
MC836P	9936
MC837L	9937
MC837P	9937
MC840L	9935
MC840P	9935
MC844L	9944
MC844P	9944
MC845L	9945
MC845P	9945
MC846L	9946
MC846P	9946
MC848L	9948
MC848P	9948
MC849L	9949
MC849P	9949
MC850L	9950
MC850P	9950
MC851L	9951
MC851P	9951
MC852L	9099
MC852P	9099
MC853L	9093
MC853P	9093
MC855L	9097
MC855P	9097
MC856L	9094
MC856P	9094
MC857L	9157
MC857P	9157
MC858	9158
MC858L	9158
MC858P	9158
MC861L	9961
MC861P	9961
MC862L	9962
MC862P	9962
MC863L	9963
MC863P	9963
MC874G	9974
MC876P	9976
Mc876P	9976
MC889G	9989
MC889P	9989
MC944	9944
MC944L	9944
MC1303	725
MC1303L	725
MC1303P	725
MC1304P	718
MC1304PQ	718
MC1305P	720
MC1305P-C	720
MC1305PQ	720
MC1306P	745
MC1307	722
MC1307P	722
MC1307PQ	722
MC1310	801
MC1310A	801
MC1310P	801
MC-1310P	801
MC1311P	743
MC1312P	799
MC-1312P	799
MC1312P	799
MC1314G	704
MC1314P	802
MC1315P	803
MC1316	814
MC1316P	814
MC1316PC	814
MC1324P	739
MC1324PQ	739
MC1326P	739
MC1326PQ	739
MC1328G	707
MC1328P	790
MC1328PQ	790
MC1329P	790
MC1329PQ	790
MC1330P	747
MC1339P	721
MC1339PQ	721
MC1344	779-1*
MC1344P	779-1*
MC1345P	779-1*
MC1345PQ	779-1*
MC1349P	795
MC1350	746
MC1350P	746
MC1350PQ	746
MC1351P	748
MC1351PQ	748
MC1352P	749
MC-1352P	749
MC1352P	749
MC1352PQ	749
MC1355P	750
MC1355PQ	750
MC1356P	737
MC1357	708
MC1357P	708
MC1357PQ	708
MC1358	712
MC1358P	712
MC1358PQ	712
MC1364	783
MC1364G	780
MC1364P	783
MC1364PQ	783
MC1370	714
MC1370P	714
MC1370PQ	714

To Be Replaced	ECG Replacement
MC1371	715
MC1371P	715
MC1371PQ	715
MC1375P	723
MC1375PQ	723
MC1389P	788
MC1391P	815
MC1393AP	794
MC1398	738
MC1398P	738
MC-1398P	738
MC1398P	738
MC1398PQ	738
MC1406B	4063B
MC1406BL	4063B
MC1411P	2011
MC1412P	2012
MC1413P	2013
MC1416P	2014
MC1422P1	833
MC1455P1	955M
MC1458	778
MC1458CP1	778
MC1458P	778
MC1458P1	778
MC1458V	778
MC1461R	946
MC1496	973
MC1496A	973D
MC1496G	973
MC1496N	973D
MC1496P	973D
MC1520(Diode)	116
MC1521	116
MC1522(Diode)	116
MC1523(Diode)	116
MC1524(Diode)	116
MC1527(Diode)	125
MC1528(Diode)	125
MC1529(Diode)	125
MC1550G	816
MC1550P	817
MC1709CG	909
MC1709CP1	909
MC1709CP2	909D
MC1709P2	909D
MC1710CG	910
MC1710CL	910D
MC1710CP2	910D
MC1710P2	910D
MC1711CG	911
MC1711CL	911D
MC1723CG	923
MC1723CL	923D
MC1723CP	923D
MC1723G	923
MC1741CG	941
MC1741CL	941D
MC1741CP1	941M
MC1741CP2	941D
MC1747CG	947
MC1747CL	947D
MC1747CP	947D
MC1747CP1	947D
MC1747CP2	947D
MC1747LCG	947
MC1747LCP2	947D
MC1748P1	975
MC1800P	9800
MC1801P	9801
MC1802P	9802
MC1803P	9803
MC1804P	9804
MC1805P	9805
MC1806P	9806
MC1807P	9807
MC1808P	9808
MC1809P	9809
MC1810P	9810
MC1811P	9811
MC1812P	9812
MC1313P	9813
MC1814P	9814
MC1816L	9111
MC1816P	9111
MC1938	738
MC2315-3	5482
MC2326	177
MC2526	109
MC3000L	74H00
MC3000P	74H00
MC3001	1192
MC3001AN	1192
MC3001AT	1192
MC3001(J.C.PENNY)	1192
MC3001L	74H08
MC3001P	74H08
MC3004L	74H01
MC3004P	74H01
MC3005L	74H10
MC3005P	74H10
MC3006L	74H11
MC3006P	74H11
MC3008L	74H04
MC3008P	74H04
MC3009L	74H05
MC3009P	74H05
MC3010L	74H20
MC3010P	74H20
MC3011L	74H21
MC3011P	74H21
MC3012L	74H22
MC3012P	74H22
MC3016L	74H30
MC3016P	74H30

To Be Replaced	ECG Replacement
MC3018L	74H62
MC3018P	74H62
MC3019L	74H61
MC3019P	74H61
MC3020L	74H50
MC3020P	74H50
MC3021L	74H86
MC3021P	74H86
MC3023L	74H51
MC3023P	74H51
MC3024L	74H40
MC3024P	74H40
MC3030L	74H60
MC3030P	74H60
MC3031L	74H52
MC3031P	74H52
MC3032L	74H53
MC3032P	74H53
MC3033L	74H54
MC3033P	74H54
MC3034L	74H55
MC3034P	74H55
MC3054L	74H71
MC3054P	74H71
MC3055L	74H72
MC3055P	74H72
MC3061P	74S114
MC3062P	74S113
MC3063L	74H73
MC3063P	74H73
MC3301L	992
MC3301P	992
MC-3340P	829
MC3340P	829
MC3346P	912
MC3386P	912
MC3456P	978
MC4004	7481
MC4040P	974
MC-4044	974
MC4044P	974
MC4080	1083
MC4080-1	1083
MC4080-2	1083
MC4080-3	1083
MC4558	778A
MC5321	177
MC6007	136A
MC6007A	136A
MC6008	137A
MC6008A	137A
MC6010A	5071A
MC6011A	138A
MC6012A	5072A
MC6013A	139A
MC6014	140A
MC6014A	140A
MC6015A	5074A
MC6016	142A
MC6016A	142A
MC6017A	143A
MC6018	145A
MC6018A	145A
MC6019A	5075A
MC6020A	5077A
MC6021A	5079A
MC6022A	5080A
MC6023A	5081A
MC6024	146A
MC6024A	146A
MC6025A	5084A
MC6026	147A
MC6026A	147A
MC6027A	5085A
MC6028A	5086A
MC6029A	5087A
MC6030A	5088A
MC6107	136A
MC6107A	136A
MC6108	137A
MC6108A	137A
MC6110A	5071A
MC6111A	138A
MC6112A	5072A
MC6113A	139A
MC6114A	140A
MC6115A	5074A
MC6116	142A
MC6116A	142A
MC6118	145A
MC6118A	145A
MC6119A	5075A
MC6120A	5077A
MC6121A	5079A
MC6122A	5080A
MC6123A	5081A
MC6124	146A
MC6124A	146A
MC6126	147A
MC6126A	147A
MC6127A	5085A
MC6128A	5086A
MC6129A	5087A
MC6130A	5088A
MC6308A	5119A
MC6310	5120A
MC6311	5121A
MC6314A	5125A
MC6315A	5126A
MC6316A	5127A
MC6317A	5128A
MC6318A	5130A
MC6319A	5131A
MC6320A	5133A
MC6321A	5135A

To Be Replaced	ECG Replacement
MC6322A	5136A
MC6323A	5137A
MC6324A	5139A
MC6325A	5141A
MC6326A	5142A
MC6327A	5143A
MC6328A	5144A
MC6329A	5145A
MC6330A	5146A
MC7400C	7400
MC7400L	7400
MC7400P	7400
MC7401L	7401
MC7401P	7401
MC7402L	7402
MC7402P	7402
MC7403L	7403
MC7403P	7403
MC7404L	7404
MC7404P	7404
MC7405L	7405
MC7405P	7405
MC7406L	7406
MC7406P	7406
MC7407L	7407
MC7407P	7407
MC7408L	7408
MC7408P	7408
MC7409L	7409
MC7409P	7409
MC7410L	7410
MC7410P	7410
MC7416L	7416
MC7416P	7416
MC7417L	7417
MC7417P	7417
MC7420L	7420
MC7420P	7420
MC7426L	7426
MC7426P	7426
MC7430L	7430
MC7430P	7430
MC7437L	7437
MC7437P	7437
MC7438L	7438
MC7438P	7438
MC7440L	7440
MC7440P	7440
MC7441AL	7441
MC7441AP	7441
MC7442L	7442
MC7442P	7442
MC7443L	7443
MC7443P	7443
MC7444L	7444
MC7444P	7444
MC7445L	7445
MC7445P	7445
MC7446L	7446
MC7446P	7446
MC7447L	7447
MC7447P	7447
MC7448L	7448
MC7448P	7448
MC7450L	7450
MC7450P	7450
MC7451L	7451
MC7451P	7451
MC7453L	7453
MC7453P	7453
MC7454L	7454
MC7454P	7454
MC7460L	7460
MC7460P	7460
MC7470L	7470
MC7470P	7470
MC7472L	7472
MC7472P	7472
MC7473L	7473
MC7473P	7473
MC7475L	7475
MC7475P	7475
MC7476L	7476
MC7476P	7476
MC7479L	7479
MC7479P	7479
MC7480L	7480
MC7480P	7480
MC7483L	7483
MC7483P	7483
MC7486L	7486
MC7486P	7486
MC7490L	7490
MC7490P	7490
MC7491AL	7491
MC7491AP	7491
MC7492L	7492
MC7492P	7492
MC7493L	7493A
MC7493P	7493A
MC7494L	7494
MC7494P	7494
MC7495L	7495
MC7495P	7495
MC7496L	7496
MC7496P	7496
MC7705CP	960
MC7706CP	962
MC7712CP	966
MC7715CP	968
MC7724CP	972
MC7805CP	960
MC7805P	960
MC7806CP	962
MC7808CP	964

@, * — See special notes on inside back cover.

To Be Replaced	ECG Replacement
MC7812CP	966
MC7815CP	968
MC7824CP	972
MC7905CP	961
MC7906CP	963
MC7912CP	967
MC7915CP	969
MC7924CP	971
MC7924CT	971
MC9427	123A
MC9448	9944
MC9600	614
MC14001CP	4001B
MC14002CP	4002B
MC14006	4006B
MC14006L	4006B
MC14007	4007B
MC14007BPC	4007B
MC14008	4008B
MC14008L	4008B
MC14011B	4011B
MC14011CD	4011B
MC14011CP	4011B
MC14012CP	4012B
MC14013CP	4013B
MC14014CP	4014B
MC14015CP	4015B
MC14016B	4016B
MC14016CP	4016B
MC14017CP	4017B
MC14018	4018B
MC14018B	4018B
MC14018BL	4018B
MC14020CP	4020B
MC14021CP	4021B
MC14022	4022B
MC14022L	4022B
MC14023CP	4023B
MC14024CP	4024B
MC14025B	4025B
MC14025CP	4025B
MC14027CP	4027B
MC14028CP	4028B
MC14029CP	4029B
MC14034	4034B
MC14034L	4034L
MC14035	4035B
MC14035L	4035B
MC14040CP	4040B
MC14042CP	4042B
MC14043	4043B
MC14043L	4043B
MC14044	4044B
MC14044L	4044B
MC14046	980
MC14049B	4049B
MC14049CP	4049B
MC14050CP	4050B
MC14053	4053B
MC14053L	4053B
MC14066	4066B
MC14066L	4066B
MC14071CP	4071B
MC14072	4072B
MC14072L	4072B
MC14073	4073B
MC14073L	4073B
MC14075	4075B
MC14075L	4075B
MC14076	4076B
MC14076L	4076B
MC14081CP	4081B
MC14093	4082B
MC14093L	4082B
MC14510	4510B
MC14510L	4510B
MC14511	4511B
MC14511L	4511B
MC14512CP	4512B
MC14514	4514B
MC14514L	4514B
MC14515	4515B
MC14515L	4515B
MC14516	4516B
MC14516L	4516B
MC14518CP	4518B
MC14520CP	4520B
MC14527CP	4527B
MC14528	4098B
MC14528L	4098B
MC14539CP	4539B
MC14555CP	4555B
MC14556CP	4556B
MC14583	40100B
MC14583L	40100B
MC14584	40106B
MC14584L	40106B
MC40803	1083
MC53200	7400
MC74107L	74107
MC74107P	74107
MC74121P	74121
MC74145P	74145
MC74150P	74150
MC74151P	74151
MC74152P	74152
MC74153P	74153
MC74155P	74155
MC74156P	74156
MC74164AP	74164
MC74165P	74165
MC74176P	74176
MC74177P	74177
MC74180P	74180
MC74181P	74181

To Be Replaced	ECG Replacement
MC74182P	74182
MC74192P	74192
MC74193P	74193
MC74195P	74195
MC75491P	75491B
MC75492P	75492B
MC145104P	1255
MCC-555	955M
MCR100-6	5405
MCR100-8	5406
MCR101	5400
MCR102	5400
MCR103	5401
MCR104	5402
MCR106-1	5411
MCR106-2	5412
MCR106-3	5413
MCR106-4	5414
MCR107-1	5411
MCR107-2	5412
MCR107-3	5413
MCR107-4	5414
MCR115	5403
MCR120	5404
MCR406-1	5421
MCR406-2	5422
MCR406-3	5423
MCR406-4	5414
MCR407-1	5431
MCR407-2	5432
MCR407-3	5433
MCR407-4	5414
MCR681	5520
MCR682	5521
MCR683	5522
MCR684	5523
MCR685	5524
MCR686	5525
MCR687	5526
MCR688	5527
MCR689	5528
MCR1842	5500
MCR1843	5501
MCR1844	5502
MCR1845	5503
MCR1846	5504
MCR1847	5505
MCR1848	5506
MCR1849	5507
MCR1850	5508
MCR2305-2	5483
MCR2305-4	5483
MCR2315-1	5480
MCR2315-2	5481
MCR2315-4	5483
MCR2315-5	5484
MCR2315-6	5485
MCR2604-4	5515
MCR2604-5	5515
MCR2604-6	5515
MCR2614L-4	5515
MCR2614L-5	5515
MCR2614L-6	5515
MCR2835-1	5517
MCR2835-2	5517
MCR2835-3	5517
MCR2835-4	5517
MCR2835-5	5518
MCR2835-6	5518
MCR2835-7	5519
MCR2835-8	5519
MCR2935-1	5540
MCR2935-2	5541
MCR2935-3	5542
MCR2935-4	5543
MCR2935-5	5544
MCR2935-6	5545
MCR2935-7	5546
MCR2935-8	5547
MCR3000-1	5442
MCR3000-2	5444
MCR3000-3	5444
MCR3000-4	5444
MCR3000-5	5446
MCR3000-6	5446
MCR3000-7	5448
MCR3000-8	5448
MCR3818-1	5514
MCR3818-2	5514
MCR3818-3	5514
MCR3818-4	5514
MCR3818-5	5515
MCR3818-6	5515
MCR3818-7	5516
MCR3818-8	5516
MCR3835-1	5517
MCR3835-2	5517
MCR3835-3	5517
MCR3835-4	5517
MCR3835-5	5518
MCR3835-6	5518
MCR3835-7	5519
MCR3835-8	5519
MCR3918-1	5520
MCR3918-2	5521
MCR3918-3	5522
MCR3918-4	5524
MCR3918-5	5526
MCR3918-6	5527
MCR3918-7	5528
MCR3918-8	5529
MCR3935-1	5540
MCR3935-2	5541
MCR3935-3	5542
MCR3935-4	5543

To Be Replaced	ECG Replacement
MCR3935-5	5544
MCR3935-6	5545
MCR3935-7	5546
MCR3935-8	5547
MCS2400	3046
MCT2	3042
MCT2E	3042
MCT275	3043
MCT492P	7492
MCV	116
MD04	116
MD-1D	506
MD34	109
MD-34	109
MD34A	109
MD46	109
MD60	109
MD60A	110MP
MD-60A	110(6)
MD134	116
MD135	116
MD136	116
MD137	116
MD138	116
MD420	160
MD501	102A
MD501B	102A
MD604A	109
MD752	136A
MD752A	136A
MD753	137A
MD753A	137A
MD757	139A
MD757A	139A
MD759	142A
MD759A	142A
MD2956	330
MDA100	166
MDA101	166
MDA102	167
MDA104	168
MDA106	169
MDA108	170
MDA110	170
MDA200	166
MDA201	166
MDA202	167
MDA204	168
MDA206	169
MDA800	5322
MDA801	5322
MDA802	5322
MDA804	5324
MDA806	5326
MDA920-1	166
MDA920-4	167
MDA920-6	168
MDA920-7	169
MDA942A-1	166
MDA942A-2	166
MDA942A-3	167
MDA942A-5	168
MDA942A-6	169
MDA942A-7	170
MDA970-1	5312
MDA970-2	5312
MDA970-3	5313
MDA970-5	5314
MDA970-6	5315
MDA970-7	5316
MDA990-1	5322
MDA990-2	5322
MDA990-3	5322
MDA990-5	5324
MDA990-6	5326
MDA2500	5322
MDA2501	5322
MDA2502	5322
MDA2504	5324
MDP173	177
MDS31	160
MDS32	160
MDS33	160
MDS33A	160
MDS33C	160
MDS33D	160
MDS34	160
MDS35	126
MDS36	160
MDS37	160
MDS38	160
MDS39	160
MDS40	160
ME0404	159
ME0404-1	159
ME0404-2	159
ME-1	123A
ME1Z829	137A
ME-2	123A
ME-3	123A
ME-4	177
ME-5	210
ME60	3005
ME213	123A
ME213A	123A
ME216	123A
ME217	123A
ME408-02C	5072A
ME409-02B	139A
ME501	159
ME900	123A
ME900A	123A
ME901	123A
ME901A	123A
ME1001	123A

To Be Replaced	ECG Replacement
ME1002	123A
ME1075	128
ME1110	154
ME1120	154
ME1138	229
ME2001	123A
ME2002	123A
ME3001	108
ME3002	108
ME3011	108
ME4001	123A
ME4002	123A
ME4003	123A
ME4003C	123A
ME4101	123A
ME4102	123A
ME4103	123A
ME4104	123A
ME5001	108
ME6001	123A
ME6002	123A
ME6003	123A
ME7021	3027
ME7161	3006
ME8001	128
ME8002	128
ME8003	128
ME8201	108
ME9001	229
ME9002	123A
ME9021	108
ME9022	108
MEF-25	123A
MEM562	465
MEM562C	465
MEM563	465
MEM563C	465
MEM564C	222
MEM630	222
MEM680	222
MEM680Y	222
MEN60	222
MEN680	222
MEN680Y	222
MER-65-L11324	519
MEZ5.6T5	136A
MEZ5.6T10	136A
MEZ12T5	142A
MEZ12T10	142A
MEZ15T5	145A
MEZ15T10	145A
MEZ27T5	146A
MEZ27T10	146A
MF12/16	502
MF15/1B	503
MF-15/1b	502
MF15/1b	503
MF20/1b	503
MF20/1B	503
MF-20/1b	503
MF20/b	503
MF25/1b	505
MF25/16	504
MF30/1b	504
MF-30/16	504
MF-55-62	121
MF1161	107
MF1162	107
MF1163	107
MF1164	107
MF3304	159
MFC4000	752
MFC4000A	752
MFC4000B	752
MFC4010	753
MFC4010A	753
MFC4030	754
MFC4040	754
MFC4050	755
MFC4052	755
MFC4060	756
MFC4060A	756
MFC4062	757
MFC4062A	757
MFC4063A	758
MFC4064A	759
MFC6010	760
MFC6020	761
MFC6030	762
MFC6030A	762
MFC6032	763
MFC6032A	763
MFC6033	764
MFC6033A	764
MFC6034	765
MFC6034A	765
MFC6040	766A
MFC6050	767
MFC6060	768
MFC6070	769
MFC6080	770
MFC8010	771
MFC8020	772A
MFC8021	796
MFC8021A	796
MFC8022A	772A
MFC8030	773
MFC8040	774
MFC8070	776
MFE121	222
MFE130	222
MFE130-1-712	222
MFE130-712	222
MFE131	222
MFE631	222

To Be Replaced	ECG Replacement
MFE2004	466
MFE2005	466
MFE2007	466
MFE2098	466
MFE3004	221
MFE3005	221
MFE3006	222
MFE3007	222
MFE3008	222
MFP121	222
MG9623	123A
MGL75A	138A
MGLA39	134A
MGLA39A	5067A
MGLA39B	134A
MGLA43B	5068A
MGLA47	135A
MGLA47A	5069A
MGLA47B	135A
MGLA51	135A
MGLA51A	135A
MGLA51B	135A
MGLA56	136A
MGLA56A	136A
MGLA56B	136A
MGLA62	137A
MGLA62A	137A
MGLA62B	137A
MGLA68B	5071A
MGLA82B	5072A
MGLA91	139A
MGLA91A	139A
MGLA91B	139A
MGLA100	140A
MGLA100A	140A
MGLA100B	140A
MH67	116
MH68	116
MH70	116
MH71	116
MH72	125
MH350L12K	543
MH353	536
MH353A01	536
MH354	500A
MH383-B01	500A
MH401	525
MH500	116
MH670	116
MH680	116
MH700	116
MH710	116
MH720	125
MH730	125
MH913	522
MH913A01	522
MH914	500A
MH914A01	500A
MH915A09	532
MH915A12	531
MH915A13	531
MH915B01	532
MH915C01	532
MH915C02	531
MH919	522
MH919A01	522
MH919D01	522
MH920	500A
MH920A01	500A
MH920A06	500A
MH920A07	500A
MH920A08	500A
MH920A10	521
MH931	522
MH931A01	522
MH931A04	522
MH931A07	522
MH932	500A
MH932A01	500A
MH943	534
MH943A01	534
MH970A02	533
MH970C01	537
MH970C02	533
MH983A01	522
MH983A02	522
MH983A03	522
MH983A04	522
MH984A02	532
MH985A01	534
MH987	500A
MH987A01	500A
MH987A02	500A
MH987A03	500A
MH987A04	521
MH988A03	536
MH1002	522
MH1002A01	522
MH1004B01*	539
MH1011B01*	539
MH1030A01	538
MH1030A02	539
MH1031C01*	539
MH1201	529
MH1201A01	529
MH1201C01	529
MH1201E01	529
MH1203	523
MH1203A01	523
MH1203B01	523
MH1203B02	523
MH1203B03	523
MH1203B10	523
MH1203B13	523
MH1204	523

To Be Replaced	ECG Replacement
MH1204A01	523
MH1204D02	523
MH1204D03	523
MH1204H01	523
MH1205	523
MH1205A01	523
MH1206	530
MH1206A01	530
MH1207	530
MH1207A01	530
MH1209	530
MH1209A01	530
MH1220	530
MH1220A01	530
MH1221	523
MH1221A01	523
MH1221A02	523
MH1221E02	526A
MH1221F01	523
MH1222	529
MH1222A01	529
MH1222A02	529
MH1222A03	535
MH1222E04	549
MH1501	192
MH1502	193
MH9410A	128
MH9460A	129
MH9623	123A
MH9630	123A
MHE200E	184
MHM1001	108
MHM1101	108
MHT180	105
MHT181	105
MHT230	105
MHT1802	105
MHT1803	105
MHT1804	105
MHT1807	105
MHT1808	105
MHT1809	105
MHT2002	101
MHT2003	101
MHT2004	101
MHT2008	101
MHT2009	101
MHT2010	101
MHT2305	105
MHT2414	128
MHT2418	128
MHT4401	128
MHT4411	128
MHT4412	128
MHT4413	128
MHT4451	128
MHT4483	128
MHT4511	128
MHT4512	128
MHT4513	128
MHT5906	152
MHT7401	128
MHT7411	128
MHT7412	128
MHT7414	128
MHT7417	128
MHT7601	130
MHT7602	130
MHT7603	130
MHT7607	130
MHT7608	130
MHT7609	130
MHT9001	128
MHT9002	128
MHT9004	128
MHT9005	128
MHT18010	105
MI-151	113A
MI-301	177
MI301	177
MI1546	108
MI9623	123A
MI9630	123A
MIC709-5(D.I.P)	909D
MIC709-5(MetalCan)	909
MIC710-5C	910
MIC710-5(D.I.P.)	910D
MIC710-5(Metal Can)	910
MIC711-5(D.I.P.)	911D
MIC711-5(Metal Can)	911
MIC723-5(D.I.P.)	923D
MIC723-5(Metal Can)	923
MIC741-5(D.I.P.)	941D
MIC741-5(Metal Can)	941
MIC930-5D	9930
MIC930-5P	9930
MIC931-5D	9931
MIC931-5P	9931
MIC932-5D	9932
MIC932-5P	9932
MIC933-5D	9933
MIC933-5P	9933
MIC935-5D	9935
MIC935-5P	9935
MIC936-5D	9936

To Be Replaced	ECG Replacement
MIC936-5P	9936
MIC937-5D	9937
MIC937-5P	9937
MIC941-5D	9941
MIC941-5P	9941
MIC944-5D	9944
MIC944-5P	9944
MIC945-5D	9945
MIC945-5P	9945
MIC946-5D	9946
MIC946-5P	9946
MIC948-5D	9948
MIC948-5P	9948
MIC949-5D	9949
MIC949-5P	9949
MIC950-5D	9950
MIC950-5P	9950
MIC951-5D	9951
MIC951-5P	9951
MIC961-5D	9961
MIC961-5P	9961
MIC962-5D	9962
MIC962-5P	9962
MIC963-5D	9963
MIC963-5P	9963
MIC7400J	7400
MIC7400N	7400
MIC7401J	7401
MIC7401N	7401
MIC7402J	7402
MIC7402N	7402
MIC7403J	7403
MIC7403N	7403
MIC7404J	7404
MIC7404N	7404
MIC7405J	7405
MIC7405N	7405
MIC7410J	7410
MIC7410N	7410
MIC7413J	7413
MIC7413N	7413
MIC7420J	7420
MIC7420N	7420
MIC7426J	7426
MIC7426N	7426
MIC7428	7428
MIC7428J	7428
MIC7428N	7428
MIC7430J	7430
MIC7430N	7430
MIC7433A	7433
MIC7440J	7440
MIC7440N	7440
MIC7441AJ	7441
MIC7441AN	7441
MIC7442J	7442
MIC7442N	7442
MIC7443J	7443
MIC7443N	7443
MIC7444J	7444
MIC7444N	7444
MIC7445J	7445
MIC7445N	7445
MIC7450J	7450
MIC7450N	7450
MIC7451J	7451
MIC7451N	7451
MIC7453J	7453
MIC7453N	7453
MIC7454J	7454
MIC7454N	7454
MIC7460J	7460
MIC7460N	7460
MIC7470J	7470
MIC7470N	7470
MIC7472J	7472
MIC7472N	7472
MIC7473J	7473
MIC7473N	7473
MIC7474J	7474
MIC7474N	7474
MIC7475J	7475
MIC7475N	7475
MIC7476J	7476
MIC7476N	7476
MIC7481J	7481
MIC7481N	7481
MIC7482J	7482
MIC7482N	7482
MIC7483J	7483
MIC7483N	7483
MIC7484J	7484
MIC7484N	7484
MIC7486J	7486
MIC7486N	7486
MIC7490J	7490
MIC7490N	7490
MIC7491AJ	7491
MIC7491AN	7491
MIC7492J	7492
MIC7492N	7492
MIC7493J	7493A
MIC7493N	7493A
MIC7494J	7494
MIC7494N	7494
MIC7495J	7495
MIC7495N	7495
MIC7496J	7496
MIC9093-5D	9093
MIC9093-5P	9093
MIC9094-5D	9094
MIC9094-5P	9094
MIC9097-5D	9097
MIC9097-5P	9097
MIC9099-5D	9099

@, * — See special notes on inside back cover.

To Be Replaced	ECG Replacement
MIC9099-5P	9099
MIC74107J	7496
MIC74107N	74107
MIC74109	74109
MIC74121J	74107
MIC74121N	74121
MIC74145J	74145
MIC74145N	74145
MIC74150J	74150
MIC74150N	74150
MIC74151J	74151
MIC74151N	74151
MIC74154J	74154
MIC74154N	74154
MIC74155J	74155
MIC74155N	74155
MIC74156J	74156
MIC74156N	74156
MIC74180J	74180
MIC74180N	74180
MIL31	3007
MIL32	3007
MIL38	3007
MILB51	3020
MIS13674/47	234
MIS14150-18	101
MIS-14150-18A	101
MIS14150/37	154
MIS-18101-3	9930
MIS-18101-4	9932
MIS-18101-5	9945
MJ105	165
MJ400	124
MJ408	283
MJ410	162
MJ411	162
MJ413	283
MJ420	154
MJ421	154
MJ423	283
MJ424	283
MJ425	163A
MJ431	283
MJ450	180
MJ480	130
MJ481	130
MJ490	180
MJ491	180
MJ703N	703A
MJ802	181
MJ900	244
MJ901	244
MJ1000	243
MJ1001	243
MJ1800	162
MJ2249	175
MJ2250	175
MJ2251	124
MJ2252	124
MJ2253	218
MJ2254	218
MJ2267	180
MJ2268	180
MJ2500	246
MJ2501	246
MJ2801	130
MJ2802	130
MJ2840	130
MJ2841	130
MJ2901	180
MJ2955	219
MJ3000	245
MJ3001	245
MJ3010	162
MJ3011	163A
MJ3026	162
MJ3027	162
MJ3029	162
MJ3030	163A
MJ3101	175
MJ3201	124
MJ3202	124
MJ3260	283
MJ3430	283
MJ3520	245
MJ3521	245
MJ3701	218
MJ3771	181
MJ3772	181
MJ4001	243
MJ4010	244
MJ4011	244
MJ4030	250
MJ4031	250
MJ4032	250
MJ4033	249
MJ4034	249
MJ4035	249
MJ4101	175
MJ4102	175
MJ4502	180
MJ5202	175
MJ5203	175
MJ5204	175
MJ6302	280
MJ8400	165
MJ9000	283
MJ12003	389
MJ13014	385
MJ13335	386
MJ15024	388
MJ34000	243
MJE104	183
MJE105	183
MJE105K	242

To Be Replaced	ECG Replacement
MJE180	184
MJE181	182
MJE182	182
MJE200	184
MJE-200	184
MJE-200	184
MJE200B	184
MJE200E	186A
MJE204	182
MJE205	182
MJE205K	241
MJE340	157
MJE341	157
MJE344	157
MJE370	185
MJE370K	242
MJE371	242
MJE371K	242
MJE423	162
MJE482	184
MJE483	184
MJE488	184
MJE492	185
MJE493	185
MJE520	184
MJE520K	241
MJE521	184
MJE-521	242
MJE521K	241
MJE700	254
MJE701	254
MJE702	254
MJE703	254
MJE710	185
MJE711	185
MJE800	253
MJE801	253
MJE802	253
MJE803	253
MJE1090	258
MJE1091	258
MJE1092	258
MJE1093	258
MJE1100	257
MJE1101	257
MJE1102	257
MJE1103	257
MJE1909	235
MJE2360	198
MJE2370	242
MJE2371	242
MJE2480	241
MJE2481	241
MJE2482	241
MJE2483	241
MJE2490	242
MJE2491	242
MJE2520	241
MJE2521	241
MJE2522	241
MJE2523	241
MJE2801	182
MJE2901	183
MJE2940	130
MJE2955	183
MJE3054	241
MJE3055	182
MJE3440	157
MJE3740	242
MJE3741	242
MJE6040	260
MJE6041	260
MJE6042	260
MJE6043	259
MJE6044	259
MJE6045	259
MJE9400	184
MJE9411T	108
MJE9450	185
MJE9742	157
MJE13009	379
MJES191	241
MJF1033G	312
MJF2480	235
MJF10335	132
MJG5194	242
MJR1C	116
MK-10	312
MK10	312
MK10-2	312
MK-10-E	312
MK3800	1136
MK5485	132
ML78L05A	977
ML78M05	960
ML201AT	1171
ML201T	1171
ML301AS	975
ML301AT	1171
ML301T	1171
ML307S	976
ML709CM	909D
ML709CT	909
ML741CM	941D
ML741CS	941M
ML741CT	941
ML747CP	947D
ML747CT	947
ML748CS	975
ML1310P	801
ML1458S	778
ML2005P	960
ML2812	177
MLED92	3029
MLED650	3020

To Be Replaced	ECG Replacement
MLED655	3020
MLED930	3028
MLM201AG	1171
MLM224L	987
MLM224P	987
MLM239AL	834
MLM301AG	1171
MLM301AP1	975
MLM301AU	975
MLM307P1	976
MLM307U	976
MLM309K	309K
MLM324L	987
MLM324P	987
MLM324P1	987
MLM339AL	834
MLM565GP	989
MLM2901P	834
MLM2902P	987
MLN343A	5068A
MLNA328A	5064A
MLNA339A	5067A
MLNA351A	5116A
MLNA356A	136A
MLNA362A	137A
MLNA368A	5071A
MLNA375A	138A
MLNA382A	5072A
MLNA391A	139A
MLNA3100A	140A
MLV746A	5066A
MLV747A	134A
MLV748A	5067A
MLV749A	5068A
MLV751A	5116A
MLV752A	136A
MLV753A	137A
MLV754A	5071A
MLV755A	138A
MLV756A	5072A
MLV757A	139A
MLV758A	140A
MLV4370A	5061A
MLV4371A	5063A
MLV4372A	5065A
MM0	116
MM2	116
MM3	116
MM4	116
MM5	116
MM6	116
MM7	125
MM8	125
MM9	125
MM10	125
MM64C00N	74C00
MM74C00	74C00
MM74C00N	74C00
MM74C02	74C02
MM74C04	74C04
MM74C08	74C08
MM74C10	74C10
MM74C14	74C14
MM74C20	74C20
MM74C42	74C42
MM74C48	74C48
MM74C73	74C73
MM74C74	74C74
MM74C76	74C76
MM74C85	74C85
MM74C90	74C90
MM74C93	74C93
MM74C151	74C151
MM74C154	74C154
MM74C157	74C157
MM74C161	74C161
MM74C164	74C164
MM74C173	74C173
MM74C174	74C174
MM74C175	74C175
MM74C192	74C192
MM74C193	74C193
MM74C221	74C221
MM74C925	74C925
MM80C97	80C97
MM380	160
MM486	128
MM487	128
MM488	128
MM511	128
MM512	128
MM513	128
MM709	108
MM999	159
MM1139	160
MM1151	102A
MM1152	102A
MM1153	102A
MM1154	102A
MM1199	160
MM1367/2SC684	108
MM1382	108
MM1387	108
MM1557	357
MM1558	359
MM1559	360
MM1601	347
MM1602	349
MM1603	351
MM1614	159
MM1618	337
MM1620	337
MM1622	339
MM1646	339
MM1666	351

To Be Replaced	ECG Replacement
MM1668	320
MM1680	348
MM1681	350
MM1742	102A
MM1755	123A
MM1756	123A
MM1757	123A
MM1758	123A
MM1803	108
MM1809	128
MM1809A	128
MM1810	195A
MM1810A	128
MM1941	108
MM1943	128
MM1945	108
MM2102	465
MM2103	464
MM2260	154
MM2266	128
MM2503	160
MM2550	160
MM2552	160
MM2554	160
MM2894	160
MM3000	154
MM3002	154
MM3005	282
MM3006	282
MM3007	282
MM3009	154
MM3014	190
MM3100	154
MM3101	154
MM3726	159
MM3905	159
MM3906	159
MM4005	129
MM4006	129
MM4020	353
MM4021	354
MM4022	355
MM4023	356
MM4048	159
MM5000	160
MM5001	160
MM5002	160
MM5611AN	4011B
MM6400N	4011B
MM7087	154
MM7088	154
MM8001	278
MM8002	278
MM8004	195A
MM55104	1255
MM55104N	1255
MMC607	610
MMF5	461
MMZ12(06)	143A
MN22	121
MN23	121
MN24	121
MN25	121
MN26	121
MN29	121
MN29BLK	121
MN29GRN	121
MN29PUR	121
MN29WHT	121
MN32	121
MN34A	109
MN46	121
MN48	121
MN49	121
MN51	109
MN52	102A
MN53	102A
MN53BLU	102A
MN53GRN	102A
MN53RED	102A
MN60	102A
MN60(diode)	109
MN61	127
MN63	127
MN64	127
MN73	121
MN73BLK	121
MN73WHT	121
MN76	104
MN194	121
MN6040	1255
MN6040A	1255
MOS3635	221
MOTMJE371	185
MOTMJE521	184
MP-01	116
MP100	116
MP110B	179
MP225	116
MP300	116
MP400	116
MP500	213
MP500A	105
MP500(Rect.)	116
MP501	105
MP501A	105
MP502	105
MP502A	105
MP503	105
MP503A	105
MP504	105
MP504A	105
MP505	105
MP505A	105
MP506	105

To Be Replaced	ECG Replacement
MP506A	105
MP507	105
MP507A	105
MP525	105
MP600	179
MP601	179
MP602	179
MP603	179
MP1003-1	116
MP1003-2	116
MP1003-4	116
MP1014	121
MP1014-1	102A
MP1014-2	123A
MP1014-4	102A
MP1014-5	102A
MP1014-6	102A
MP1310P	108
MP1509-1	121
MP1509-2	121
MP1509-3	121
MP1612	127
MP1612A	127
MP1612B	127
MP1613	127
MP2060	121
MP2060-1	121
MP2061	121
MP2062	121
MP2137A	121
MP2138A	121
MP2139A	121
MP2142A	121
MP2143A	121
MP2144A	121
MP2200A	179
MP2300A	179
MP3611	121
MP3612	121
MP3613	121
MP3614	121
MP3615	121
MP3617	121
MP3730	127
MP3730A	127
MP3730B	127
MP3731	127
MP5113	116
MP-5115	116
MP9602	116
MP53201P	7401
MP4300158	519
MP4906063	128
MPB121D	9668
MPB123D	9661
MPB124D	9678
MPB125D	9662
MPC5MH	1058
MPc17c	1047
MPC17C	1047
MPC20C	1075A
MPc23c	1046
MPC23C	1046
MPC29C	1089*
MPc29c	1089*
MPC29C2	1089*
MPC30C	1049
MPc31c	1048
MPC31C	1048
MPC32C	1050
MPC41C	1093
MPc46c	1077
MPC46C	1077
MPc47c	1076
MPC47C	1076
MPC48C	1091*
MPC48C-1	1091*
MPC48C1	1091*
MPc48c1	1091*
MPC48C-1	1091*
MPC554	1142
MPC554C	1142
MPC558	1051
MPC561	1079
MPC561C	1079
MPC562C	1050
MPC566H	1052
MPC566HB	1103
MPC566HC	1103
MPC566HD	1103
MPc570c	1086*
MPC570C	1086
MPC571C	1078
MPC575C	1141
MPC575C2	1140
MPC577H	1082
MPC596C	1187
MPC1001H2	1127
MPC3500	177
MPC14305	960
MPD858	1198
MPD858C	1198
MPD861C	1254
MPD861C1	1254
MPD861CE	1254
MPF101	133
MPF102	132
MPF-102	132
MPF103	133
MPF104	133
MPF105	133
MPF106	451
MPF107	132
MPF109	457
MPF111	457

To Be Replaced	ECG Replacement
MPF112	133
MPF121	222
MPF-121	222
MPF159	465
MPF160	464
MPN-3401	177
MPN3401	177
MPS25	121
MPS109	123A
MPS404	159
MPS404A	159
MPS706	108
MPS706A	108
MPS834	107
MPS918	107
MPS943J	123A
MPS943K	123A
MPS1097	160
MPS1572	159
MPS1893	104
MPS2369	107
MPS2711	123A
MPS2712	123A
MPS2713	123A
MPS2714	123A
MPS2715	123A
MPS2716	123A
MPS2823	107
MPS2894	107
MPS2923	123A
MPS2924	123A
MPS2925	123A
MPS2926	123A
MPS2926BRN	123A
MPS2926GRN	123A
MPS2926ORN	123A
MPS2926RED	123A
MPS2926YEL	123A
MPS3392	123A
MPS3393	123A
MPS3394	123A
MPS3395	123A
MPS3396	123A
MPS3397	123A
MPS3398	123A
MPS3536	108
MPS3563	229
MPS3638	159
MPS3638A	159
MPS3639	159
MPS3640	159
MPS3642	128
MPS3646	311
MPS3693	229
MPS3694	229
MPS3702	159
MPS3703	159
MPS3704	123A
MPS3705	123A
MPS3706	123A
MPS3707	123A
MPS3708	123A
MPS3709	123A
MPS3710	199
MPS3711	123A
MPS3721	123A
MPS3826	123A
MPS3827	123A
MPS3992	123A
MPS4354	159
MPS4355	159
MPS4356	159
MPS5086	159
MPS5172	123A
MPS5551M	287
MPS5668	133
MPS6134	159
MPS6351	123A
MPS6413	123A
MPS6507	229
MPS6511	108
MPS6511-S	108
MPS6512	229
MPS6513	229
MPS6514	123A
MPS6515	289
MPS6516	159
MPS6517	159
MPS6518	159
MPS6519	159
MPS6520	123A
MPS6521	123A
MPS6522	159
MPS6523	159
MPS6524	159
MPS6528	107
MPS6529	107
MPS6530	123A
MPS6531	107
MPS6532	107
MPS6533	159
MPS6534	159
MPS6534M	159
MPS6535	159
MPS6535M	159
MPS6539	108
MPS6540	107
MPS6541	108
MPS6542	108
MPS6543	108
MPS6544	123A
MPS6545	123A
MPS6546	108
MPS6547	108
MPS6548	108

To Be Replaced	ECG Replacement
MPS6552	123A
MPS6553	123A
MPS6554	123A
MPS6555	123A
MPS6556	123A
MPS6560	287
MPS6561	123A
MPS6562	159
MPS6563	159
MPS6565	123A
MPS6566	123A
MPS6567	123A
MPS6568	123A
MPS6569	107
MPS6570	107
MPS6571	123A
MPS6573	123A
MPS6574	123A
MPS6575	123A
MPS6576	123A
MPS6580	106
MPS6590	123A
MPS7513	229
MPS8000	123AP
MPS-8000	123AP
MPS8000L	123AP
MPS8001	123A
MPS9185	123A
MPS9400	152
MPS9410A	128
MPS9410AJ	128
MPS9410H	128
MPS9410I	128
MPS9411	299
MPS9411A	299
MPS9411A1	299
MPS9411AI	287
MPS9411G	299
MPS9411H	299
MPS9411T	299
MPS9416	297
MPS9416A	297
MPS9416AT	297
MPS9416ST	297
MPS9417A	297
MPS9417AT	297
MPS9417T	297
MPS9418	297
MPS9418G	297
MPS9418S	297
MPS9418T	297
MPS9423	123A
MPS9423F	108
MPS9423G	108
MPS9423H	108
MPS9423I	108
MPS9426	229
MPS9426A	229
MPS9426B	229
MPS9426BC	229
MPS9426C	229
MPS9427	229
MPS9427B	229
MPS9427C	229
MPS9433	123A
MPS9433J	123A
MPS9433K	199
MPS9434	123A
MPS9434J	123A
MPS9434K	123A
MPS9444	177
MPS9460A	129
MPS9460H	129
MPS9460I	129
MPS9460J	129
MPS9461A1	287
MPS9461AI	288
MPS9466A	293
MPS9466AT	298
MPS9467A	298
MPS9467T	298
MPS9468	298
MPS9468S	298
MPS9468T	298
MPS9476AT	298
MPS9600	123A
MPS9600-5	123A
MPS9600F	123A
MPS9600G	123A
MPS9600G/H	123A
MPS9600H	123A
MPS9601	108
MPS9602	116
MPS9604	229
MPS9604D	123A
MPS9604E	123A
MPS9604FG	108
MPS9604I	123A
MPS9604R	123A
MPS9606	177
MPS9606H	177
MPS9606I	177
MPS9611-5	123A
MPS9616	123A
MPS9616A	123A
MPS9616J	123A
MPS9618	123A
MPS9618H	123A
MPS9618I	123A
MPS9618J	123A
MPS9623	123A
MPS9623C	123A
MPS9623E	123A
MPS9623F	123A
MPS9623G	123A

@, * — See special notes on inside back cover.

To Be Replaced	ECG Replacement
MPS 9623G	123A
MPS9623G	123A
MPS9623G/H	123A
MPS9623H	123A
MPS9623H/I	123A
MPS9623I	123A
MPS9623I/J	123A
MPS9625	229
MPS9625C	229
MPS9625D	229
MPS9625E	229
MPS9625F	229
MPS9625G	229
MPS9625H	229
MPS9626	123A
MPS9630	123A
MPS9630H	123A
MPS9630I	123A
MPS9630J	123A
MPS9630K	123A
MPS9630T	123A
MPS9631	123A
MPS9631H	123A
MPS9631I	123A
MPS9631J	123A
MPS9631K	123A
MPS9631T	123A
MPS9632	123A
MPS9632H	123A
MPS9632I	123A
MPS9632J	123A
MPS9632K	123A
MPS9632T	123A
MPS9633	199
MPS9633C	199
MPS9633D	199
MPS9633G	199
MPS9634	199
MPS9634B	199
MPS9634C	199
MPS9634D	199
MPS9644	177
MPS9646	177
MPS9646G	177
MPS9646H	177
MPS9646I	177
MPS9646J	177
MPS9646M	177
MPS9664E	108
MPS9666	159
MPS9680	159
MPS9680H	159
MPS9680H/I	159
MPS9680I	159
MPS9680I/J	159
MPS9680J	159
MPS9680T	159
MPS9681	159
MPS9681I	159
MPS9681J	159
MPS9681K	159
MPS9681T	159
MPS9682	159
MPS9682I	159
MPS9682-I	159
MPS9682J	159
MPS9682K	159
MPS9682T	159
MPS9696	289
MPS9696F	289
MPS9696G	289
MPS9696H	123A
MPS9696I	289
MPS9700D	123A
MPS9700E	123A
MPS9700F	123A
MPS9734D	199
MPS9750D	159
MPS9750F	159
MPS9750G	159
MPS65611	123A
MPS96301I	123A
MPS96469	177
MPS964611	177
MPS-A05	297
MPS-A06	297
MPS-A10	233
MPS-A12	172A
MPS-A13	172A
MPS-A14	172A
MPS-A20	123AP
MPS-A42	287
MPS-A43	287
MPS-A55	159
MPS-A56	159
MPS-A65	232
MPS-A66	232
MPS-A70	159
MPS-A92	288
MPS-A93	288
MPS-D02	288
MPS-D52	287
MPS-H10	229
MPS-H17	229
MPS-H81	159
MPS-K20(Blue)	123A
MPS-K20(Red)	123A
MPS-K20(White)	123A
MPS-K21(Green)	123A
MPS-K21(Red)	123A
MPS-K21(Yellow)	123A
MPS-K22(Green)	123A
MPS-K22(Red)	123A
MPS-K22(White)	123A
MPS-K22(Yellow)	123A

To Be Replaced	ECG Replacement
MPS-L01	194
MPS-L51	288
MPS-U01	188
MPS-U01A	188
MPS-U02	188
MPS-U03	190
MPS-U04	190
MPS-U05	188
MPS-U06	188
MPS-U10	191
MPS-U11	191
MPS-U31	322
MPS-U31(Final)	322
MPS-U45	272
MPS-U51	189
MPS-U51A	189
MPS-U52	189
MPS-U55	189
MPS-U56	189
MPS-U95	273
MPSA05	297
MPSA10	233
MPSA12	172A
MPSA13	172A
MPSA14	172A
MPSA20	123AP
MPSA42	287
MPSA43	287
MPSA55	159
MPSA56	159
MPSA65	232
MPSA66	232
MPSA70	159
MPSA92	288
MPSA93	288
MPSH05	162
MPSH10	229
MPSH-10	229
MPSH17	229
MPSH81	159
MPSL01	194
MPSU01	188
MPSU01A	188
MPSU02	188
MPSU03	190
MPSU04	190
MPSU05	188
MPSU06	188
MPSU10	191
MPSU11	191
MPSU31	322
MPSU45	272
MPSU51	189
MPSU51A	189
MPSU52	189
MPSU55	189
MPSU56	189
MPSU95	273
MPT20	6406
MPT28	6407
MPT32	6408
MPT4003-10	417
MPT6003-7	419
MPT6004-2	420
MPT6004-4	418
MPU131	6402
MPX-25	116
MPX215	116
MPX9410H	128
MPX9623H/I	123A
MPX9630I	123A
MPX9681J	159
MQ1	123A
MQ2	123A
MQ32	116
MQ62	116
MQ82	116
MR-1	156
MR1C	116
MR-1C	156
MR1M	116
MR-1M	125
MR1M	116
MR21CR	5404
MR33C-H	5005A
MR36H	134A
MR39C-H	134A
MR47C-H	135A
MR51C-H	135A
MR51E-H	135A
MR56C-H	136A
MR62C-H	137A
MR62E-H	137A
MR62H	137A
MR91C-H	139A
MR91E-H	139A
MR100C-H	140A
MR100H	140A
MR120C-H	142A
MR-150-01	116
MR150C-H	145A
MR501	5802
MR-502	156
MR750	5812
MR751	5812
MR752	5814
MR754	5814
MR756	5815
MR758	5817
MR760	5817
MR801	506
MR811	506
MR812	506
MR814	506
MR816	506

To Be Replaced	ECG Replacement
MR-852	506
MR990	125
MR1030A	156
MR1031A	156
MR1031B	156
MR1032A	156
MR1032B	156
MR1120	5870
MR1120R	5871
MR1121	5872
MR1121R	5873
MR1122	5874
MR1122R	5875
MR1123	5876
MR1123R	5877
MR1124	5878
MR1124R	5879
MR1125	5880
MR1125R	5881
MR1126	5882
MR1126R	5883
MR1128	5886
MR1128R	5887
MR1130	5890
MR1130R	5891
MR1237FB	116
MR1237FL	116
MR1237SB	116
MR1237SL	116
MR1247FB	116
MR1247FL	116
MR1247SB	116
MR1247SL	116
MR1267	116
MR1337-1	116
MR1337-2	116
MR1337-3	116
MR1337-4	116
MR1337-5	116
MR2064	116
MR2065	116
MR2069	156
MR2070	156
MR2261	116
MR2262	117
MR2266	506
MR2272	506
MR2273	506
MR2369	156
MR3932	123A
MR3933	128
MR3934	129
MR9062	116
MR9600	116
MR9601	116
MR9602	116
MR9604	123A
MRB-20C	116(4)
MRC1032	1170
MRD360	3036
MRF207	346
MRF209	350
MRF233	350
MRF237	341
MRF238	345
MRF244	352
MRF245	352
MRF248	253
MRF420	335
MRF449A	325
MRF450	335
MRF450A	325
MRF451	333
MRF452	333
MRF453	333
MRF453A	334
MRF454	335
MRF454A	336
MRF455	333
MRF455A	334
MRF472	295
MRF475	235
MRF476	236
MRF485	236
MRF502	161
MRF618	365
MRF619	366
MRF620	366
MRF621	367
MRF629	361
MRF641	365
MRF644	366
MRF646	367
MRF648	368
MRF817	362
MRF4070	352
MRF8004	195A
MS1H	116
MS2H	116
MS3H	116
MS4H	116
MS5	5870
MS5H	116
MS11H	116
MS12H	116
MS13H	116
MS14H	116
MS15/1C	503
MS22B	123A
MS35H	116
MS36H	116
MS50	116
MS91X3	505
MS701T	108
MS2991	128

To Be Replaced	ECG Replacement
MS7501S	108
MS7501T	108
MS7502R	123A
MS7502S	108
MS7502T	108
MS7503R	123A
MS7504	172A
MS7505	159
MS7506G	129
MS7506H	128
MS7506J	128
MS9667	159
MS9681	159
MSG7506	128
MSJ7505	129
MSK5405	128
MSL3574	501B
MSM4001	4001B
MSM4002	4002B
MSM4011	4011B
MSM4012	4012B
MSM4013	4013B
MSM4015	4015B
MSM4016	4016B
MSM4017	4017B
MSM4019	4019B
MSM4020	4020B
MSM4023	4023B
MSM4025	4025B
MSM4027	4027B
MSM4028	4028B
MSM4030	4030B
MSM4040	4040B
MSM4042	4042B
MSM4049	4049B
MSM4050	4050B
MSM4068	4068B
MSM4069	4069
MSM4071	4071B
MSM4078	4078B
MSM4081	4081B
MSM4085	4085B
MSM4086	4086B
MSM4518	4518B
MSM4520	4520B
MSM40192	40192B
MSM40193	40193B
MSP10A	225
MSP15A	225
MSP20A	225
MSP25A	225
MSP1161	213
MSP999058-1	128
MSR-500	116
MSR500	116
MSR7502	108
MSR7503	123A
MSR-V5	116
MSS1000	177
MSS-1000	116
MSS7501	108
MSS7502	108
MST-10	128
MST7501	108
MT021	116
MT021A	116
MT022	116
MT022A	116
MT0404	159
MT0404-1	159
MT0404-2	159
MT0411	159
MT0412	159
MT0413	159
MT1	3031
MT2	3032
MT5	5892
MT14	116
MT24	116
MT30L-A	522
MT30L-C	500A
MT44	116
MT64	116
MT84	125
MT100	108
MT101	108
MT102	108
MT104	123A
MT106	108
MT107	108
MT608A	137A
MT696	123A
MT697	123A
MT698	154
MT699	154
MT706	123A
MT706A	123A
MT706B	123A
MT707	123A
MT708	123A
MT726	159
MT743	108
MT744	108
MT753	108
MT869	159
MT870	154
MT871	154
MT910	154
MT911	154
MT912	154
MT1060	316
MT1131	159
MT1131A	159
MT1132	159
MT1132A	159

To Be Replaced	ECG Replacement
MT1132B	159
MT1254	159
MT1255	159
MT1256	159
MT1257	159
MT1258	159
MT1259	159
MT1420	159
MT1613	128
MT1711	128
MT1893	154
MT1991	159
MT2303	159
MT2411	159
MT2412	159
MT3202	124
MT4101	123A
MT4102	123A
MT4102A	123A
MT4103	123A
MT5108	316
MT6001	123A
MT6002	123A
MT6003	123A
MT9001	123A
MT9002	123A
MT102351A	160
MTE200E	199
MTZ607	136A
MTZ607A	136A
MTZ608	137A
MTZ608A	137A
MTZ610A	5071A
MTZ611A	138A
MTZ612A	5072A
MTZ613	139A
MTZ613A	139A
MTZ614	140A
MTZ614A	140A
MTZ615A	5074A
MTZ616	142A
MTZ616A	142A
MTZ617A	143A
MTZ618	145A
MTZ618A	145A
MTZ619A	5075A
MTZ620A	5077A
MTZ621A	5079A
MTZ622A	5080A
MTZ623A	5081A
MTZ624	146A
MTZ624A	146A
MTZ625A	5084A
MTZ626A	147A
MTZ627A	5085A
MTZ628A	5086A
MTZ629A	5087A
MTZ630A	5088A
MU-26-1C	223
MU1628	177
MU9610	188
MU9610F	188
MU9610T	188
MU9611	188
MU9611G	188
MU9611T	188
MU9660	189
MU9660S	189
MU9660T	189
MU9661	189
MU9661T	189
MUS4987	6404
MV-1	601
MV1	601
MV1Y	601
MV-1Y	601
MV-2	601
MV3	601
MV-3(2)	601
MV3(Diode)	177
MV3(Rectifier)	116
MV4	177
MV-5	116
MV10	611
MV10A	611
MV11	605
MV-11	601
MV-11T	601
MV12	612
MV-12	612
MV12A	612
MV-12H	601
MV-13	605
MV13	109
MV13YH	605
MV-13YH	605
MV13YH	605
MV-14	605
MV20C	525
MV33	614
MV33A	614
MV50	3000
MV52	3003
MV53	3002
MV54	3001
MV55	3004
MV121LF	601
MV201	611
MV-201	611
MV401	612
MV832	613
MV834	614
MV1410	613
MV1410A	613
MV1620	610

To Be Replaced	ECG Replacement
MV1624	611
MV1626	612
MV1634	613
MV1638	614
MV1720A	610
MV1724	611
MV1724A	611
MV1726	612
MV1726A	612
MV1734	613
MV1734A	613
MV1738	614
MV1738A	614
MV2101	610
MV2103	611
MV2104	612
MV2105	612
MV2107	613
MV2109	614
MV2111	614
MV2201	610
MV2203	611
MV2209	614
MV3007	610
MV3007E	610
MV3010	611
MV3010E	611
MV3012	612
MV3012E	612
MV3015	612
MV3015E	612
MV3020	613
MV3020E	613
MV3027	613
MV3027E	613
MV3033	614
MV3033E	614
MV3039	614
MV3039E	614
MV3501	610
MV3503	611
MV3504	612
MV3507	613
MV5023	3018
MV5024	3019
MV5053	3020
MV5054-2	3025
MV5074B	3007
MV5153	3023
MV5174B	3009
MV5253	3024
MV5274B	3010
MV5353	3021
MV5374B	3011
MV5491	3026
MV5753	3022
MV5774B	3008
MV6113	613
MV9051	611
MV9052	610
MV9053	610
MV9054	610
MV9151	612
MV9152	612
MV9153	612
MV9154	612
MV9251	613
MV9252	613
MV9253	613
MV9254	613
MV9351	614
MV9352	614
MV9353	614
MV9354	614
MV9600	614
MV9601	614
MVA-05A	116
MVB6113	613
MVB6116	613
MVB6124	612
MVB6125	612
MVB6126	612
MVB6128	614
MVB6129	614
MVB6130	614
MVB6136	613
MVE6112	611
MVE6115	611
MVE6124	612
MVE6125	612
MVE6139	610
MVE6141	610
MVS460	147A
MX-0592	1255
MX205	135A
MX-3058	1192
MX-3198	977
MX-3200	1253
MX-3235	1254
MX-3240	1301
MX-3243	801
MX-3256	1242
MX-3260	1192
MX-3309	74145
MX3336	746
MX-3369	973D
MX-3370	1195
MX-3372	1194
MX-3379	1204
MX-3389	1082
MX-3399	1198
MX-3434	1247
MX-3440	812
MX-3452	964
MXC-1312	799

To Be Replaced	ECG Replacement
MXC1312A	799
MXC1312P	799
MY-1	116
MY201	612
MZ-00	177
MZ-08	5072A
MZ090	139A
MZ-5	5010A
MZ5A	136A
MZ5.1T5	135A
MZ6	137A
MZ-6	5013A
MZ6.2	137A
MZ6.2A	137A
MZ6.2B	137A
MZ6.2T5	137A
MZ-7	5071A
MZ7	5071A
MZ-7	5071A
MZ8	5072A
MZ-8	5072A
MZ9	131
MZ10	140A
MZ-10	5019A
MZ10A	140A
MZ-11	142A
MZ12	142A
MZ-12	142A
MZ12A	142A
MZ12B	142A
MZ14	144A
MZ15A	145A
MZ15B	5100A
MZ15T20	145A
MZ18B	5103A
MZ27A	146A
MZ33A	147A
MZ70-2.4A	5000A
MZ70-2.4B	5000A
MZ70-2.5A	5001A
MZ70-2.5B	5001A
MZ70-2.7A	5002A
MZ70-2.7B	5002A
MZ70-3.3A	5005A
MZ70-3.3B	5005A
MZ70MA	5070A
MZ82A	150A
MZ92	140A
MZ92-2.4	5000A
MZ92-2.5	5001A
MZ92-2.7	5002A
MZ92-3.3	5005A
MZ92-3.9A	134A
MZ92-4.7A	135A
MZ92-5.1A	135A
MZ92-5.6A	136A
MZ92-6.0B	5070A
MZ92-6.2A	137A
MZ92-9.1A	139A
MZ92-9.1B	139A
MZ92-10A	140A
MZ92-12A	142A
MZ92-15A	145A
MZ92-24B	5080A
MZ92-27A	146A
MZ92-576-4	7400
MZ110	5156A
MZ-110MA	141A
MZ110MA	141A
MZ111	5157A
MZ112	5158A
MZ113	5159A
MZ114	5160A
MZ115	5161A
MZ116	5162A
MZ117	5163A
MZ118	5164A
MZ120	5166A
MZ204-B	5067A
MZ-204B	5067A
MZ204B	5067A
MZ-205	135A
MZ-205	135A
MZ205	135A
MZ205(5½)	135A
MZ206	5070A
MZ206B	5070A
MZ207	5071A
MZ-207	5071A
MZ207	5071A
MZ207-02A	5071A
MZ207(Zener)	5071A
MZ208	5072A
MZ-208	5072A
MZ-209	139A
MZ209	139A
MZ-210	140A
MZ-210B	140A
MZ210B	140A
MZ212	142A
MZ-212	142A
MZ212B	142A
MZ214B	144A
MZ216B	5075A
MZ218B	5077A
MZ220B	5079A
MZ222B	5080A
MZ224A	5031A
MZ224B	5081A
MZ250	5018A
MZ306	5070A
MZ306B	5070A
MZ306C	5070A
MZ309	139A
MZ309B	139A

To Be Replaced	ECG Replacement
MZ310A	140A
MZ310B	140A
MZ312B	142A
MZ314B	144A
MZ316B	5075A
MZ318B	5077A
MZ320B	5079A
MZ322B	5080A
MZ406B	5070A
MZ408-02C	5072A
MZ409-02B	139A
MZ410B	140A
MZ412B	142A
MZ414B	144A
MZ416B	5075A
MZ418B	5077A
MZ420B	5079A
MZ422B	5080A
MZ424B	5081A
MZ500-1	5000A
MZ500-2	5002A
MZ500-4	5005A
MZ500-5	134A
MZ500-6	134A
MZ500-8	5069A
MZ500-9	135A
MZ500-10	136A
MZ500-11	137A
MZ500-15	139A
MZ500-16	140A
MZ500-17	5074A
MZ500-18	142A
MZ500-20	145A
MZ500-26	146A
MZ500-28	147A
MZ500-35	149A
MZ500-38	150A
MZ500-39	5095A
MZ605	137A
MZ610	137A
MZ620	137A
MZ640	137A
MZ706	5120A
MZ707	5121A
MZ708	5122A
MZ709	5124A
MZ710	5125A
MZ711	5126A
MZ712	5127A
MZ713	5128A
MZ714	5129A
MZ715	5130A
MZ716	5131A
MZ718	5133A
MZ720	5135A
MZ722	5136A
MZ724	5137A
MZ727	5139A
MZ730	5141A
MZ733	5142A
MZ736	5143A
MZ739	5144A
MZ743	5145A
MZ747	5146A
MZ751	5147A
MZ756	5148A
MZ760	5149A
MZ762	5150A
MZ768	5151A
MZ775	5152A
MZ782	5153A
MZ791	5155A
MZ821	137A
MZ821A	137A
MZ823	137A
MZ823A	137A
MZ825	137A
MZ825A	137A
MZ827A	137A
MZ827A(Zener)	137A
MZ941	5074A
MZ941A	5074A
MZ941B	5074A
MZ942	5074A
MZ942A	5074A
MZ942B	5074A
MZ943	5074A
MZ943A	5074A
MZ943B	5074A
MZ944	5074A
MZ944A	5074A
MZ944B	5074A
MZ1000-13	140A
MZ1000-15	142A
MZ1000-17	145A
MZ1000-20	5079A
MZ1000-26	5143A
MZ1004	5007A
MZ1005	135A
MZ1007	138A
MZ1010	140A
MZ1012	142A
MZ1014	144A
MZ2360	177
MZ2361	177
MZ3245	5081A
MZ4617	5000A
MZ4618	5001A
MZ4620	134A
MZ4622	134A
MZ4624	135A
MZ4625	135A
MZ4626	136A
MZ4627	137A
MZ5110	5156A

To Be Replaced	ECG Replacement
MZ5111	5157A
MZ5112	5158A
MZ5113	5159A
MZ5114	5160A
MZ5115	5161A
MZ5116	5162A
MZ5117	5163A
MZ5119	5165A
MZ5120	5166A
MZ5706	5120A
MZ5707	5121A
MZ5708	5122A
MZ5709	5124A
MZ5710	5125A
MZ5712	5127A
MZ5713	5128A
MZ5714	5129A
MZ5715	5130A
MZ5716	5131A
MZ5718	5133A
MZ5720	5135A
MZ5722	5136A
MZ5724	5137A
MZ5727	5139A
MZ5730	5141A
MZ5733	5142A
MZ5736	5143A
MZ5756	5148A
MZ5760	5149A
MZ5775	5152A
MZ5915	5130A
MZ5918	5133A
MZ5922	5136A
MZ5927	5139A
MZ5933	5142A
MZ5956	5148A
MZX9.1	139A
N-02	116
N-020	160
N020	126
N0282CT	181
N0400	162
N0S9411	192
N1A(TRIPLER)	529
N1X	154
N2A-1	529
N2A-2	529
N2A(DIODE)	109
N2XA	154
N4T	123A
N13T1	6402
N13T2	6402
N-41	116
N48	109
N52A1T	1171
N53A1T	1171
N57B2-3	102A
N57B2-6	102A
N57B2-7	102A
N57B2-8	103A
N57B2-11	160
N57B2-13	160
N57B2-14	160
N57B2-15	102A
N57B2-17	126
N57B2-18	126
N57B2-19	126
N57B2-22	160
N57B2-23	126
N57B2-25	102A
N57B4-2	121
N57B4-4	121
N74H00A	74H00
N74H00F	74H00
N74H01A	74H01
N74H01F	74H01
N74H04A	74H04
N74H04F	74H04
N74H05A	74H05
N74H05F	74H05
N74H08A	74H08
N74H08F	74H08
N74H10A	74H10
N74H10F	74H10
N74H11A	74H11
N74H11F	74H11
N74H20A	74H20
N74H20F	74H20
N74H21A	74H21
N74H21F	74H21
N74H22A	74H22
N74H22F	74H22
N74H30A	74H30
N74H30F	74H30
N74H40A	74H40
N74H40F	74H40
N74H50A	74H50
N74H50F	74H50
N74H51A	74H51
N74H51F	74H51
N74H52A	74H52
N74H52F	74H52
N74H53A	74H53
N74H53F	74H53
N74H54A	74H54
N74H54F	74H54
N74H55A	74H55
N74H55F	74H55
N74H60A	74H60
N74H60F	74H60
N74H61A	74H61
N74H61F	74H61
N74H62A	74H62
N74H62F	74H62
N74H71A	74H71

To Be Replaced	ECG Replacement
N74H71F	74H71
N74H72A	74H72
N74H72F	74H72
N74H73A	74H73
N74H73F	74H73
N74H74A	74H74
N74H74F	74H74
N74H76B	74H76
N74H101A	74H101
N74H101F	74H101
N74H102A	74H102
N74H102F	74H102
N74H103A	74H103
N74H103F	74H103
N74H106B	74H106
N74H106F	74H106
N74H108A	74H108
N74H108F	74H108
N74LS00	74SL00
N74LS00A	74LS00
N74LS02A	74LS02
N74LS03A	74LS03
N74LS08A	74LS08
N74LS10A	74LS10
N74LS11A	74LS11
N74LS20A	74LS20
N74LS27A	74LS27
N74LS30A	74LS30
N74LS32A	74LS32
N74LS51A	74LS51
N74LS73A	74LS73
N74LS74A	74LS74A
N74LS83A	74LS83A
N74LS85B	74LS85
N74LS107A	74LS107
N74LS109B	74LS109A
N74LS138B	74LS138
N74S00A	74S00
N74S00F	74S00
N74S03A	74S03
N74S03F	74S03
N74S04A	74S04
N74S04F	74S04
N74S05A	74S05
N74S05F	74S05
N74S10A	74S10
N74S10F	74S10
N74S11A	74S11
N74S11F	74S11
N74S15A	74S15
N74S15F	74S15
N74S20A	74S20
N74S20F	74S20
N74S22A	74S22
N74S22F	74S22
N74S40A	74S40
N74S40F	74S40
N74S64A	74S64
N74S64F	74S64
N74S65A	74S65
N74S65F	74S65
N74S74A	74S74
N74S74F	74S74
N74S86A	74S86
N74S86F	74S86
N74S112B	74S112
N74S112F	74S112
N74S113A	74S113
N74S113F	74S113
N74S114A	74S114
N74S114F	74S114
N74S133B	74S133
N74S133F	74S133
N74S134B	74S134
N74S134F	74S134
N74S138B	74S138
N74S138F	74S138
N74S140A	74S140
N74S140F	74S140
N74S151B	74S151
N74S151F	74S151
N74S153J	74S153
N74S153N	74S153
N74S157B	74S157
N74S157F	74S157
N74S158B	74S158
N74S158F	74S158
N74S174B	74S174
N74S174F	74S174
N74S175B	74S175
N74S175F	74S175
N74S181J	74S181
N74S181N	74S181
N74S194B	74S194
N74S194J	74S194
N74S251B	74S251
N74S251F	74S251
N74S258B	74S258
N74S258J	74S258
N201AY	123A
N406B	4063B
N-756A	5017A
N3563	123A
N4066	4066B
N4967	176
N5065	712
N5070	714
N5070B	714
N5071	715
N5071A	715
N5072	790
N5072A	790
N5111	708
N5111A	708
N5239A	721

To Be Replaced	ECG Replacement
N5406(RCA)	177
N5519	139A
N5558V	778
N5570B	714
N5596K	973
N5709A	909D
N5709T	909
N5710A	910D
N5710T	910
N5711A	911D
N5711K	911
N5723A	923D
N5723L	923
N5723T	923
N5740T	940
N5741A	941D
N5741K	947
N5741T	941
N5741V	941M
N5747A	947D
N5747F	947D
N5747K	947
N7400A	7400
N7400F	7400
N7401	7401
N7401A	7400
N7401F	7400
N7402A	7402
N7402F	7402
N7403A	7403
N7403F	7403
N7404A	7404
N7404F	7404
N7404N	7404
N7405A	7405
N7405F	7405
N7406A	7406
N7406F	7406
N7407A	7407
N7407F	7407
N7408A	7408
N7408F	7408
N7409A	7409
N7409F	7409
N7410A	7410
N7410F	7410
N7411A	7411
N7411F	7411
N7413A	7413
N7413F	7413
N7414B	7414
N7414F	7414
N7416A	7416
N7416F	7416
N7417A	7417
N7417F	7417
N7420A	7420
N7420F	7420
N7421A	7421
N7421F	7421
N7426A	7426
N7426F	7426
N7430A	7430
N7430F	7430
N7432A	7432
N7432F	7432
N7437A	7437
N7437F	7437
N7437N	7437
N7438A	7438
N7438F	7438
N7439A	7439
N7439F	7439
N7440A	7440
N7440F	7440
N7441B	7441
N7441F	7441
N7442A	7442
N7442BA	7442
N7442BF	7442
N7442F	7442
N7442P	7442
N7443A	7443
N7443F	7443
N7444B	7444
N7444F	7444
N7445B	7445
N7446B	7446
N7447B	7447
N7447F	7447
N7448B	7448
N7450A	7450
N7450F	7450
N7451A	7451
N7451F	7451
N7453A	7453
N7453F	7453
N7454A	7454
N7454F	7454
N7460A	7460
N7460F	7460
N7470A	7470
N7470F	7470
N7472A	7472
N7472F	7472
N7473	7473
N7473A	7473
N7473F	7473
N7474A	7474
N7474F	7474
N7475B	7475
N7476B	7476
N7476F	7476
N7480A	7480
N7480F	7480

To Be Replaced	ECG Replacement
N7483B	7483
N7483F	7483
N7485A	7485
N7485F	7485
N7486A	7486
N7486F	7486
N7490A	7490
N7490F	7490
N7491A	7491
N7491F	7491
N7492A	7492
N7492F	7492
N7493A	7493A
N7493F	7493A
N7493N	7493A
N7494B	7494
N7494F	7494
N7495A	7495
N7495F	7495
N7496B	7496
N7496F	7496
N-52329	130
N74107A	74107
N74107F	74107
N74109	74109
N74109B	74109
N74109F	74109
N74121A	74121
N74121F	74121
N74122A	74123
N74122F	74122
N74123B	74123
N74123F	74123
N74132B	74132
N74132F	74132
N74141B	74141
N74145B	74145
N74150F	74150
N74150N	74150
N74151B	74151
N74151F	74151
N74153B	74153
N74153F	74153
N74154F	74154
N74154N	74154
N74155B	74155
N74155F	74155
N74156B	74156
N74156F	74156
N74160B	74160
N74160F	74160
N74161B	74161
N74161F	74161
N74162	74162
N74162B	74162
N74162F	74162
N74163B	74163
N74163F	74163
N74164A	74164
N74164F	74164
N74165B	74165
N74165F	74165
N74166B	74166
N74166F	74166
N74170B	74170
N74170F	74170
N74174	74174
N74175B	74175
N74175F	74175
N74180A	74180
N74180F	74180
N74181F	74181
N74181N	74181
N74182B	74182
N74182F	74182
N74190B	74190
N74190F	74190
N74191B	74191
N74191F	74191
N74192B	74192
N74192F	74192
N74193B	74193
N74193F	74193
N74195B	74195
N74195F	74195
N74198F	74198
N74198N	74198
N74199F	74199
N74199N	74199
N-121122	130
N121122	130
N-EA15X130	107
N-EA15X131	108
N-EA15X132	108
N-EA15X133	126
N-EA15X134	107
N-EA15X135	107
N-EA15X136	123A
N-EA15X137	123A
N-EA15X138	123A
N-EA15X139	131MP
N-EA16X27	110
N-EA16X29	142A
N-EA16X30	116
n-EA2136	158
NA0305	5940
NA0505	5940
NA1	5940
NA11	5944
NA13	116
NA20	101
NA21	5944
NA-22	116
NA22	116
NA-25	116

To Be Replaced	ECG Replacement
NA25	116
NA30	103A
NA32	116
NA33	116
NA-33	116
NA35	116
NA36	116
NA-36	116
NA42	116
NA45	116
NA46	116
NA-46	116
NA62	117
NA63	117
NA65	117
NA66	117
NA74	125
NA75	125
NA76	125
NA84	125
NA85	125
NA86	125
NA92H2	1195
NA104	125
NA105	125
NA156H	1194
NA603	5940
NA615	5944
NA1005	5944
NA1022-1001	160
NA1022-1007	102A
NA-1114-1001	160
NA-1114-1002	160
NA-1114-1004	102A
NA-1114-1005	102A
NA-1114-1006	102A
NA-1114-1007	102A
NA-1114-1008	102A
NA-1114-1009	102A
NA-1114-1010	102A
NA-1114-1011	102A
NA1505	5944
NA2002	1232
NA2005	5944
NA5018-1001	160
NA5018-1002	126
NA5018-1003	126
NA5018-1004	126
NA5018-1005	126
NA5018-1006	126
NA5018-1007	126
NA5018-1008	126
NA5018-1009	126
NA5018-1010	126
NA5018-1011	126
NA5018-1012	126
NA5018-1013	102A
NA5018-1014	102A
NA5018-1015	102A
NA5018-1016	102A
NA5018-1022	126
NA5018-1219	126
NA5018-1220	126
NA16221435	909
NAM383	1232
NAP-T-Z-10	102A
NAP-TZ-8	121
NAP-TZ-10	102A
NASD32	6408
NB013	199
NB021	294
NB121	159
NB211	297
NB211EI	297
NC011U	4011B
NC29	109
NC30	102A
NC32	158
NC33	103A
NC34	176
NC207AL	123A
NC510	1255
NC858C	1198
NC1709CP1	909
NC5104	1255
NC6040	1255
NCB14	295
NCB35	235
NCBV14	329
NCBW35	235
NCD858	1198
NCR046	128
NCR047	128
NCS9018D	107
ND06AV	988
ND8L05	977
ND8L06	988
ND62WV	988
NDL062	988
NDL806	988
NDS103	210
NE56CCN	832
NE78L05	977
NE78L08	981
NE78M05	960
NE78M24	972
NE269	102A
NE-446AQ	177
NE536T	940
NE545B	2001
NE550A	923D
NE550F	923D
NE550N	923D
NE555JG	955M
NE555V	955M

To Be Replaced	ECG Replacement
NE556A	978
NE556V	978
NE565A	989
NE565N	989
NE567	832
NE567C	832
NE567F	989
NE567N	832
NE567V	832
NE645B	2004
NE3118	289
NE4304	133
NE7805	960
NE7806	962
NE7812	966
NE7815	968
NE7824	972
NE74014	278
NF500	116
NF501	116
NF506	116
NF520	133
NF522	133
NF523	133
NF531	133
NF533	133
NF550	116
NF4302	457
NF4303	457
NF4304	457
NF5485	133
NF5486	133
NGP3002	109
NGP3003	5802
NGP5002	137A
NGP5007	139A
NGP5010	142A
NJ100A	107
NJ100B	123A
NJ101	159
NJ101B	159
NJ102C	123A
NJ107	128
NJ181B	102A
NJ202B	107
NJ703N	703A
NJF1033G	312
NJM78L05	977
NJM78L05A	977
NJM78L05AV	977
NJM78L05F	977
NJM703	703A
NJM-703N	703A
NJM2016	1194
NJM2201	1082
NJR78L05	977
NJR78L05A	977
NJR78L06	988
NJR78L06A	988
NJR78L08	981
NJR78L08A	981
NJR78M05	960
NJR78M05A	960
NJR78M06	962
NJR78M06A	962
NJR78M08	964
NJR78M08A	964
NJR78M12	966
NJR78M12A	966
NJR78M15	968
NJR78M15A	968
NJR78M24	972
NJR78M24A	972
NK4A-1A19	121
NK6B-3A19	121MP
NK8P-2A19	102A
NK9L-4A19	102A
NK12-1A19	123A
NK14A119	121
NK65-1A19	160
NK65-2A19	103A
NK65-4A19	101
NK65A119	160
NK65B119	126
NK65C119	121
NK66-1A19	102A
NK66-2A19	102A
NK66-3A19	102A
NK74-3A19	100
NK77A119	105
NK77B119	121MP
NK77C119	121
NK84AA19	121
NK88B119	160
NK88C119	100
NK92-1A19	105
NK1302	160
NK1404	160
NKA8-1A19	160
NKT4	102A
NKT5	102A
NKT11	102A
NKT12	100
NKT24	102A
NKT25	102A
NKT32	102A
NKT33	102A
NKT42	100
NKT43	100
NKT52	102A
NKT53	102A
NKT54	102A
NKT62	100
NKT63	100
NKT64	100

To Be Replaced	ECG Replacement
NKT72	100
NKT73	100
NKT74	100
NKT102	158
NKT103	126
NKT104	158
NKT105	158
NKT106	158
NKT107	158
NKT108	158
NKT109	158
NKT121	160
NKT122	160
NKT123	102A
NKT124	160
NKT125	160
NKT126	102A
NKT127	126
NKT128	100
NKT129	100
NKT131	126
NKT132	126
NKT133	102A
NKT141	100
NKT142	100
NKT143	100
NKT144	100
NKT151	126
NKT152	126
NKT153/25	158
NKT154/25	158
NKT162	100
NKT163	100
NKT163/25	158
NKT164	100
NKT164/25	158
NKT202	100
NKT203	100
NKT204	100
NKT205	100
NKT206	100
NKT207	100
NKT208	102A
NKT211	158
NKT212	158
NKT213	158
NKT214	158
NKT215	158
NKT216	158
NKT217	158
NKT218	158
NKT219	158
NKT221	100
NKT222	102A
NKT222S1	100
NKT222S2	100
NKT223	102
NKT223A	102A
NKT224	102
NKT224A	102A
NKT224J	176
NKT225	102
NKT225A	102A
NKT225J	176
NKT226	102
NKT226A	102A
NKT226J	176
NKT227	102
NKT227A	102A
NKT228	102
NKT228A	102A
NKT231	102
NKT231A	102A
NKT232	102
NKT232A	102A
NKT242	126
NKT243	100
NKT244	102A
NKT246	102A
NKT247	102
NKT247A	102A
NKT247J	176
NKT249	126
NKT251	160
NKT252	126
NKT253	126
NKT254	126
NKT255	126
NKT261	100
NKT262	100
NKT263	100
NKT264	100
NKT265	126
NKT270	126
NKT271	158
NKT272	158
NKT273	102A
NKT274	158
NKT275	158
NKT275A	158
NKT275E	158
NKT275J	158
NKT278	102A
NKT303	102A
NKT308	102A
NKT401	121
NKT-401	121
NKT402	121
NKT-402	121
NKT403	121
NKT-403	121
NKT404	121
NKT-404	121
NKT405	121
NKT-405	121

To Be Replaced	ECG Replacement
NKT406	121
NKT415	121
NKT-415	121
NKT416	121
NKT-416	121
NKT450	121
NKT451	131
NKT-451	121
NKT452	131
NKT-452	121
NKT452-S1	131
NKT453	131
NKT-453	121
NKT454	121
NKT-454	121
NKT501	121
NKT-501	121
NKT503	121
NKT-503	121
NKT504	121
NKT-504	121
NKT618	126
NKT618J	176
NKT674F	160
NKT675	126
NKT676	126
NKT677	126
NKT677F	160
NKT701	103A
NKT703	103A
NKT713	103A
NKT717	103A
NKT734	101
NKT736	101
NKT751	103A
NKT752	103A
NKT753	101
NKT773	103A
NKT781	103A
NKT4055	219
NKT10339	123A
NKT10419	123A
NKT10439	123A
NKT10519	123A
NKT12329	123A
NKT12429	123A
NKT13329	123A
NKT13429	123A
NKT15325	126
NKT15425	126
NKT16229	161
NKT16325	100
NKT16425	100
NKT20329	159
NKT20329A	159
NKT20339	159
NKT35219	161
NKT80111	457
NKT80112	457
NKT80113	457
NKT80211	133
NKT80212	133
NKT80212	133
NKT80213	133
NKT80214	133
NKT80215	457
NKT80216	457
NKT800112	133
NKT800113	133
NL-2N683	5522
NL-2N684	5523
NL-2N685	5524
NL-2N686	5525
NL-2N687	5526
NL-2N688	5527
NL-2N689	5528
NL-2N690	5529
NL-2N691	5530
NL-2N692	5531
NL5	116
NL10	116
NL-10	116
NL15	116
NL20	116
NL25	116
NL30	116
NL40	116
NL50	116
NL60	116
NL100B	107
NL-102	123A
NL-C35A	5542
NL-C35B	5543
NL-C35C	5544
NL-C35D	5545
NL-C35E	5546
NL-C35F	5541
NL-C35G	5543
NL-C35H	5544
NL-C35M	5547
NL-C35U	5540
NL-C36A/2N1844	5502
NL-C36B/2N1846	5504
NL-C36C/2N1848	5506
NL-C36D/2N1849	5507
NL-C36E/2N1850	5508
NL-C36G2N1845	5503
NL-C36M	5529
NL-C36N	5531
NL-C36S	5530
NL-C37A	5522
NL-C37B	5524
NL-C37C	5526
NL-C37D	5527
NL-C37E	5528

To Be Replaced	ECG Replacement
NL-C37M	5529
NL-C37N	5531
NL-C37S	5530
NL-C38A	5541
NL-C38B	5543
NL-C38C	5544
NL-C38D	5545
NL-C38E	5546
NL-C38G	5543
NL-C38H	5544
NL-C38M	5547
NL-C38U	5540
NN50	116
NN7000	192
NN7001	192
NN7002	192
NN7003	192
NN7004	192
NN7005	192
NN7500	193
NN7501	193
NN7502	193
NN7503	193
NN7504	193
NN7505	193
NN7511	193
NOS9411	192
NP50A	116
NP60A	116
NP117	123
NP118	123
NP118A	123
NP119	123
NP120	123
NP160	123
NP160A	123
NP161	123
NP161A	123
NP162	107
NP162H	107
NP163	123
NP163A	123
NP262	100
NP263	108
NP264	108
NP327	100
NP327A	100
NP327B	129
NP328	129
NP328A	129
NP328B	129
NP329	129
NP329A	129
NP329B	129
NP330	129
NP330A	129
NP332	123
NP333	123
NP333A	123
NP334	123
NP334A	123
NP335	123
NP335A	123
NP335B	123
NP336	123
NP336A	123
NP338A	123
NP343A	128
NP470	123
NP471	123
NP471A	123
NP472	123A
NP472A	123A
NP473	123
NP474	123A
NP474A	123A
NP475	123A
NP475A	123A
NP476	123
NP477	123
NP478	123
NP479	123
NP479A	123
NP480	123
NP480A	123A
NP495	106
NP541	123A
NP542	123A
NP542A	123
NP543	123A
NP543A	123A
NP544	126
NP546	123
NP547	123
NP548	123
NP549	123
NP550	123
NP551	123
NP552	123
NP560	123
NP619	108
NP620	108
NP621	108
NP622	123
NP696	123
NP697	128
NP697A	123
NP699A	154
NP699B	154
NP702	108
NP703	108
NP706	108
NP706A	108
NP706B	108
NP706C	108

To Be Replaced	ECG Replacement
NP708	123A
NP708A	123A
NP709	108
NP709A	108
NP715	123
NP717	108
NP718	108
NP719	194
NP719A	194
NP720	128
NP720A	128
NP721	159
NP721A	159
NP722	159
NP722A	159
NP726	106
NP727	106
NP728	123
NP729	123
NP738	154
NP739	154
NP739A	154
NP740	154
NP740A	154
NP742	123
NP742A	123
NP743	108
NP743A	108
NP744	108
NP745	123A
NP746	123A
NP747	123A
NP748	123A
NP749	123A
NP751	123A
NP752	108
NP753	123A
NP754	123A
NP756	108
NP756A	123
NP757	108
NP757A	123
NP758	108
NP758A	123
NP758B	123
NP759	108
NP759A	123
NP759B	123
NP760	108
NP760A	123
NP760B	123
NP761	108
NP762	108
NP772	123
NP780	107
NP783	123A
NP784	123A
NP784A	123A
NP789	123
NP790	123
NP791	123
NP792	123
NP793	123
NP821	101
NP834A	123A
NP839	123A
NP840	123A
NP841	108
NP842	123A
NP843	108
NP844	123A
NP849	108
NP850	108
NP851	108
NP852	108
NP860	159
NP861	159
NP866	123
NP867	129
NP870	128
NP871	128
NP909	123
NP910	128
NP911	128
NP912	128
NP915	123A
NP916	108
NP916A	108
NP917	161
NP917A	161
NP919	123A
NP920	123A
NP921	123A
NP922	123A
NP923	159
NP924	159
NP925	159
NP926	159
NP927	159
NP928	159
NP929	123A
NP929A	123A
NP930	123A
NP930A	123A
NP935	159
NP936	159
NP937	159
NP938	159
NP939	159
NP940	159
NP941	159
NP942	159
NP943	159
NP944	159
NP945	159

To Be Replaced	ECG Replacement
NP947	123A
NP957	123A
NP978	106
NP981	128
NP988	108
NP989	108
NP995	106
NP996	106
NP997	172A
NP998	172A
NP999	172A
NP1005	108
NP1006	123A
NP1024	106
NP1025	159
NP1026	159
NP1027	159
NP1028	159
NP1034	129
NP1035	129
NP1036	129
NP1037	129
NP1051	123A
NP1052	154
NP1053	154
NP1054	154
NP1060	108
NP1081	123A
NP1092	128
NP1095	103
NP1096	103
NP1103	123A
NP1104	123
NP1116	123A
NP1117	123A
NP1118	159
NP1118A	159
NP1131	159
NP1131A	159
NP1132	159
NP1132A	159
NP1139	123A
NP1149	123
NP1150	123
NP1151	123
NP1152	123
NP1153	123
NP1199	123A
NP1199A	123A
NP1207	154
NP1219	159
NP1220	159
NP1221	159
NP1222	159
NP1223	159
NP1232	129
NP1233	129
NP1234	129
NP1240	106
NP1241	106
NP1247	123
NP1248	123
NP1249	123
NP1252	128
NP1253	128
NP1254	129
NP1255	129
NP1256	129
NP1257	129
NP1258	129
NP1259	129
NP1267	123
NP1275	129
NP1276	123
NP1277	123
NP1278	123
NP1279	123
NP1386	123
NP1387	123
NP1388	123
NP1409	160
NP1410	160
NP1417	123A
NP1418	123A
NP1420	123A
NP1420A	123A
NP1439	159
NP1440	159
NP1441	159
NP1442	159
NP1443	159
NP1469	100
NP1472	128
NP1474	159
NP1474A	159
NP1505	108
NP1506	108
NP1506A	108
NP1507	108
NP1572	154
NP1573	154
NP1574	154
NP1586	107
NP1587	107
NP1588	123A
NP1589	107
NP1590	107
NP1591	123A
NP1592	107
NP1593	107
NP1594	123A
NP1623	129
NP1640	106
NP1641	106
NP1642	106

To Be Replaced	ECG Replacement
NP1643	159
NP1644	123A
NP1663	123A
NP1674	123A
NP1682	123
NP1704	123A
NP1708	123A
NP1708A	123A
NP1763	123
NP1764	128
NP1838	123A
NP1839	123A
NP1840	123A
NP1889	128
NP1890	128
NP1893	282
NP1919	159
NP1920	159
NP1921	159
NP1944	123A
NP1945	123A
NP1946	123A
NP1947	123A
NP1948	123A
NP1949	123A
NP1950	123A
NP1951	123A
NP1952	123A
NP1953	123A
NP1958	123A
NP1959	123A
NP1962	123A
NP1963	123A
NP1964	123A
NP1965	123A
NP1972	123A
NP1973	123A
NP1974	123A
NP1975	123A
NP1983	123A
NP1984	123A
NP1985	123A
NP1986	123A
NP1987	123A
NP1988	123A
NP1989	108
NP1990	128
NP1991	159
NP1992	123A
NP2002	159
NP2003	159
NP2006	159
NP2007	159
NP2008	194
NP2017	128
NP2038	123A
NP2039	123A
NP2040	123A
NP2041	123A
NP2049	123A
NP2106	128
NP2107	128
NP2108	128
NP2161	123A
NP2162	159
NP2165	159
NP2181	159
NP2182	159
NP2185	159
NP2186	159
NP2187	159
NP2192	128
NP2192A	128
NP2192B	128
NP2193	128
NP2193A	128
NP2193B	128
NP2194	128
NP2194A	128
NP2194B	128
NP2195	108
NP2195A	128
NP2195B	108
NP2198	123
NP2204	124
NP2205	123A
NP2206	123A
NP2217	123A
NP2218	123
NP2218A	123
NP2219A	123A
NP2220	123A
NP2221	123A
NP2221A	123A
NP2222	123A
NP2236	123A
NP2237	123A
NP2240	123A
NP2241	123A
NP2242	123A
NP2244	123A
NP2245	123A
NP2246	123A
NP2247	123A
NP2248	123A
NP2249	123A
NP2250	123A
NP2251	123A
NP2252	123A
NP2253	123A
NP2254	123A
NP2255	123A
NP2257	123A
NP2258	160
NP2271	102

To Be Replaced	ECG Replacement
NP2272	123A
NP2274	159
NP2275	159
NP2297	128
NP2303	159
NP2309	123A
NP2310	123A
NP2312	123A
NP2314	123A
NP2315	123A
NP2318	123A
NP2319	123A
NP2320	123A
NP2330	123
NP2331	123A
NP2336	159
NP2337	159
NP2349	123A
NP2353	123A
NP2353A	123A
NP2354	103
NP2368	123A
NP2369	107
NP2377	159
NP2378	159
NP2387	123A
NP2388	123A
NP2389	123
NP2390	123
NP2393	159
NP2394	159
NP2395	106
NP2396	123
NP2397	123
NP2405	282
NP2411	159
NP2412	159
NP2425	159
NP2428	102A
NP2429	102A
NP2430	103A
NP2431	158
NP2432	123A
NP2443	128
NP2466	123A
NP2476	123A
NP2477	123A
NP2481	123A
NP2483	123A
NP2484	123A
NP2501	123A
NP2509	154
NP2510	154
NP2511	154
NP2520	123A
NP2521	123A
NP2522	123A
NP2523	123A
NP2524	123A
NP2529	123A
NP2530	123A
NP2531	123A
NP2532	123A
NP2533	123A
NP2534	123A
NP2539	123A
NP2540	123A
NP2569	123A
NP2570	123A
NP2571	123A
NP2572	123A
NP2586	123A
NP2599	159
NP2600	159
NP2601	159
NP2602	159
NP2603	159
NP2604	159
NP2605	159
NP2605A	159
NP2610	123A
NP2617	123A
NP2618	154
NP2645	123A
NP2651	108
NP2673	123A
NP2674	123A
NP2675	123A
NP2676	123A
NP2677	123A
NP2678	123A
NP2692	123A
NP2693	123A
NP2695	159
NP2696	159
NP2706	158
NP2707	158
NP2708	108
NP2709	159
NP2710	108
NP2713	123A
NP2714	123A
NP2715	123A
NP2716	123A
NP2719	123A
NP2729	108
NP2784	108
NP2800	159
NP2801	159
NP2802	106
NP2803	106
NP2804	106
NP2805	106
NP2806	106
NP2807	106

To Be Replaced	ECG Replacement
NP2831	123A
NP2837	159
NP2845	123A
NP2846	128
NP2847	123A
NP2848	128
NP2849	128
NP2850	128
NP2851	128
NP2852	128
NP2853	128
NP2854	128
NP2855	128
NP2856	128
NP2861	159
NP2862	159
NP2865	161
NP2868	123A
NP2883	108
NP2884	108
NP2894	159
NP2894A	159
NP2895	128
NP2897	128
NP2904	129
NP2904A	129
NP2905	129
NP2905A	129
NP2906	159
NP2906A	159
NP2907	159
NP2907A	159
NP2921	108
NP2922	108
NP2923	123A
NP2924	123A
NP2925	123A
NP2926	123A
NP2927	159
NP2931	123A
NP2932	123A
NP2933	123A
NP2934	123A
NP2935	123A
NP2938	123A
NP2945	159
NP2945A	159
NP2946	159
NP2946A	159
NP2968	106
NP2969	106
NP2970	106
NP2971	106
NP3009	123A
NP3010	108
NP3011	123A
NP3013	123A
NP3014	123A
NP3015	123
NP3017	128
NP3019	128
NP3020	128
NP3062	159
NP3072	159
NP3073	159
NP3077	128
NP3078	128
NP3082	107
NP3083	107
NP3108	128
NP3109	128
NP3110	128
NP3114	154
NP3115	123A
NP3116	123A
NP3117	128
NP3120	129
NP3121	159
NP3122	123A
NP3128	123A
NP3129	123A
NP3130	123A
NP3133	129
NP3134	129
NP3135	159
NP3136	159
NP3153	160
NP3210	123A
NP3211	123A
NP3217	159
NP3218	159
NP3227	108
NP3241	123A
NP3241A	123A
NP3242	123A
NP3242A	123A
NP3247	123A
NP3250	159
NP3250A	159
NP3251	159
NP3251A	159
NP3261	123A
NP3268	123
NP3288	161
NP3289	161
NP3290	161
NP3291	161
NP3292	161
NP3299	311
NP3300	311
NP3301	123A
NP3302	123A
NP3305	159
NP3306	159
NP3307	159

To Be Replaced	ECG Replacement
NP3308	159
NP3317	159
NP3326	123A
NP3340	123A
NP3341	159
NP3342	106
NP3343	129
NP3344	129
NP3345	129
NP3346	159
NP3388	154
NP3389	154
NP3390	123A
NP3391	123A
NP3391A	123A
NP3392	123A
NP3393	123A
NP3394	123A
NP3395	123A
NP3396	123A
NP3397	123A
NP3398	123A
NP3401	159
NP3402	192
NP3403	192
NP3404	192
NP3407	108
NP3414	123A
NP3415	123A
NP3416	123A
NP3417	123A
NP3462	123A
NP3463	123A
NP3467	129
NP3468	129
NP3478	316
NP3493	108
NP3498	123
NP3502	129
NP3503	129
NP3504	159
NP3505	159
NP3506	128
NP3508	108
NP3509	108
NP3510	123A
NP3511	108
NP3526	154
NP3527	159
NP3544	108
NP3545	159
NP3547	159
NP3548	159
NP3549	159
NP3550	159
NP3563	229
NP3564	229
NP3565	123A
NP3566	123A
NP3567	128
NP3568	128
NP3569	128
NP3570	108
NP3576	106
NP3582	159
NP3600	108
NP3605	123A
NP3606	123A
NP3607	123A
NP3638	159
NP3638A	159
NP3641	123A
NP3642	128
NP3643	123A
NP3644	159
NP3645	129
NP3647	123
NP3648	108
NP3662	107
NP3663	107
NP3671	129
NP3672	159
NP3673	159
NP3677	129
NP3682	108
NP3688	108
NP3689	108
NP3691	108
NP3692	108
NP3693	229
NP3694	229
NP3700	154
NP3701	154
NP3702	159
NP3703	159
NP3704	123A
NP3705	123A
NP3706	123A
NP3707	123A
NP3708	123A
NP3709	123A
NP3710	123A
NP3711	123A
NP3712	154
NP3721	107
NP3723	123A
NP3762	129
NP3763	129
NP3764	129
NP3765	129
NP3793	123A
NP3794	123A
NP3798	159
NP3799	159
NP3825	107

To Be Replaced	ECG Replacement
NP3826	107
NP3827	229
NP3828	123A
NP3829	159
NP3830	282
NP3831	282
NP3832	108
NP3839	316
NP3840	159
NP3843	123A
NP3843A	123A
NP3844	123A
NP3844A	123A
NP3845	107
NP3845A	107
NP3854	108
NP3854A	108
NP3855	107
NP3855A	107
NP3856	107
NP3856A	107
NP3857	159
NP3858	123A
NP3858A	123A
NP3859	123A
NP3859A	123A
NP3860	107
NP3862	123A
NP3868	129
NP3900	123
NP3900A	123A
NP3901	123A
NP3903	123A
NP3904	123A
NP3905	159
NP3906	159
NP3914	159
NP3915	106
NP3923	154
NP3930	159
NP3931	159
NP3932	108
NP3933	108
NP3948	128
NP3962	159
NP3963	159
NP3964	159
NP3965	159
NP3975	123A
NP3976	123A
NP3978	159
NP3979	159
NP3983	108
NP3984	108
NP3985	108
NP4013	123A
NP4014	123A
NP4026	129
NP4027	129
NP4028	129
NP4029	129
NP4030	129
NP4031	129
NP4032	129
NP4033	129
NP4034	106
NP4035	106
NP4037	129
NP4046	311
NP4058	106
NP4059	106
NP4060	106
NP4061	106
NP4062	106
NP4068	154
NP4074	123A
NP4121	159
NP4123	123A
NP4124	123A
NP4125	159
NP4126	159
NP4134	108
NP4135	108
NP4137	123A
NP4141	199
NP4142	159
NP4234	129
NP4235	129
NP4248	159
NP4249	159
NP4250	159
NP4250A	159
NP4251	108
NP4256	123A
NP4269	154
NP4270	154
NP4274	108
NP4275	108
NP4286	123A
NP4287	123A
NP4288	159
NP4289	159
NP4290	159
NP4291	159
NP4354	159
NP4355	159
NP4359	159
NP4400	123A
NP4401	123A
NP4402	159
NP4403	159
NP4409	194
NP4410	154
NP4412	129
NP4413	159

To Be Replaced	ECG Replacement
NP4414	129
NP4415	159
NP4418	108
NP4419	108
NP4424	123A
NP4425	192
NP4432	123A
NP4432A	123A
NP4436	123A
NP4437	311
NP4449	108
NP4450	123A
NP4452	159
NP4873	108
NP4890	129
NP4916	159
NP4917	159
NP4924	154
NP4925	154
NP4935	108
NP4936	108
NP4943	128
NP4944	128
NP4945	194
NP4946	128
NP4951	123A
NP4952	123A
NP4953	123A
NP4954	123A
NP4960	128
NP4961	128
NP4962	128
NP4963	128
NP4964	128
NP4965	159
NP4966	123A
NP4967	123A
NP4968	123A
NP4969	123A
NP4970	123A
NP4971	159
NP4972	159
NP4996	108
NP4997	108
NP5023	129
NP5040	129
NP5041	129
NP5042	129
NP5086	159
NP5087	159
NP5088	199
NP5089	123A
NP5107	123A
NP5126	161
NP5127	123A
NP5128	123A
NP5129	128
NP5130	161
NP5131	108
NP5132	107
NP5133	161
NP5134	123A
NP5135	128
NP5136	128
NP5137	123A
NP5138	159
NP5139	159
NP5140	106
NP5142	159
NP5143	159
NP5172	123A
NP5174	154
NP5175	154
NP5176	154
NP5179	316
NP5180	108
NP5182	161
NP5183	123
NP5184	154
NP5187	123A
NP5188	128
NP5189	282
NP5208	106
NP5209	123A
NP5210	123A
NP5219	123A
NP5220	289
NP5221	290
NP5222	107
NP5223	123A
NP5224	123A
NP5225	123A
NP5226	159
NP5227	159
NP5232	123A
NP5233	128
NP5234	128
NP5235	128
NP5242	129
NP5243	129
NP5262	282
NP5272	108
NP5305	172A
NP5306	172A
NP5307	172A
NP5308	172A
NP5309	128
NP5310	199
NP5311	199
NP5354	159
NP5355	159
NP5356	159
NP5365	159
NP5366	159
NP5367	159

To Be Replaced	ECG Replacement
NP5368	123A
NP5369	123A
NP5370	123A
NP5371	123A
NP5372	159
NP5373	159
NP5375	159
NP5378	159
NP5379	159
NP5380	123A
NP5382	159
NP5383	159
NP5399	108
NP5400	288
NP5401	288
NP5418	123A
NP5419	123A
NP5420	123A
NP5447	159
NP5448	159
NP5449	128
NP5450	128
NP5451	128
NP5525	172A
NP5550	194
NP5551	287
NP5769	123A
NP5818	123A
NP5820	128
NP5821	129
NP5830	123A
NP6003	159
NP6004	123A
NP6005	159
NP6076	159
NP6507	229
NP6511	108
NP6512	229
NP6513	229
NP6514	123A
NP6515	289
NP6516	159
NP6517	159
NP6518	159
NP6519	159
NP6520	123A
NP6521	123A
NP6522	159
NP6523	159
NP6530	123A
NP6531	107
NP6532	107
NP6533	159
NP6534	159
NP6541	108
NP6543	108
NP6560	287
NP6561	123A
NP6562	159
NP6563	159
NP6565	123A
NP6566	123A
NP6571	123A
NP6573	123A
NP6574	123A
NP6575	123A
NP6576	123A
NP6580	106
NP8000	195A
NP8001	123A
NP-A05	297
NP-A06	297
NP-A20	123A
NP-A55	298
NP-A56	298
NP-A65	232
NP-A66	232
NP-A70	159
NP-A92	288
NP-A93	288
NP-H10	229
NP-H17	229
NP-L51	288
NPC004	109
NPC0010	116
NPC0050	116
NPC0100	116
NPC108	451
NPC108A	451
NPC115	128
NPC167	161
NPC173	108
NPC187	128
NPC188	108
NPC189	128
NPC211N	457
NPC212N	457
NPC213N	457
NPC214N	457
NPC215N	457
NPC216N	457
NPC312N	133
NPC544	1117
NPC737	123A
NPC1075	233
NPM3398	123A
NPM3563	229
NPM3638	159
NPM3702	159
NPM3703	159
NPM3704	123A
NPM3705	123A
NPM3706	123A
NPM3707	123A
NPM3708	123A

To Be Replaced	ECG Replacement
NPM3709	123A
NPM3710	199
NPM3711	123A
NPM5172	123A
NPS6518	153
NR05	101
NR041	123A
NR041E	123A
NR071AU	123A
NR-071AU	123A
NR091ET	123A
NR5	101
NR10	101
NR-10	101
NR20	103
NR30	101
NR-141ES	192
NR-141ET	192
NR201AY	123A
NR261AS	123A
NR271AY	123A
NR421	107
NR-421AS	199
NR421DG	107
NR421DH	107
NR-431AG	123A
NR-431AS	123A
NR461	123A
NR461AA	161
NR461AF	107
NR-461AS	123A
NR461EG	123A
NR461EH	123A
NR577H	1082
NR-601AT	159
NR601BT	159
NR621AT	159
NR-621AU	234
NR621EU	159
NR631AY	159
NR-671ET	193
NR700	101
NR7916	132
NRC004	1203
NS08	5461
NS010	5550
NS020	5550
NS18	5462
NS28	5463
NS32	102
NS38	5465
NS48	5465
NS110	5552
NS120	5552
NS121	102
NS210	5552
NS220	5552
NS310	5554
NS316	132
NS320	5554
NS345	161
NS381	108
NS382	108
NS404	159
NS406	161
NS410	5554
NS420	5554
NS475	123A
NS476	123A
NS477	123A
NS478	123A
NS479	123A
NS480	123A
NS510	5556
NS520	5556
NS610	5556
NS620	5556
NS661	159
NS662	159
NS663	159
NS664	159
NS665	159
NS666	159
NS667	159
NS668	159
NS710	5558
NS720	5558
NS731	123A
NS731A	123A
NS732	159
NS732A	159
NS733	123A
NS733A	123A
NS734	123A
NS734A	123A
NS810	5558
NS820	5558
NS949	123A
NS950	192
NS1000	159
NS1000A	159
NS1001	159
NS1001A	159
NS1110	124
NS1355	192
NS1356	108
NS1500	123A
NS1510	107
NS1627	823
NS1672	159
NS1672A	159
NS1673	159
NS1674	159
NS1674A	159
NS1675	159

To Be Replaced	ECG Replacement
NS1675A	159
NS1861	159
NS1861A	159
NS1862	159
NS1863	159
NS1863A	159
NS1864	159
NS1864A	159
NS1900	192
NS1960	192
NS1972	123A
NS1973	123A
NS1974	123A
NS1975	123A
NS2006	156
NS2007	156
NS2008	156
NS2100	128
NS2101	128
NS3006	156
NS3007	156
NS3008	156
NS3039	107
NS3040	107
NS3041	107
NS-3065	712
NS3300	108
NS6001	159
NS6062	159
NS6062A	159
NS6063	159
NS6063A	159
NS6064	159
NS6064A	159
NS6065	159
NS6065A	159
NS6112	108
NS6113	108
NS6114	123A
NS6115	123A
NS6207	123A
NS6210	123A
NS6211	159
NS6211A	159
NS6212	154
NS6241	159
NS7261	108
NS7262	123A
NS7267	108
NS9400	128
NS9420	128
NS9500	128
NS9540	128
NS9540	128
NS9710	108
NS9728	128
NS9729	128
NS9730	128
NS9731	128
NS12006	5882
NS15835L1	506
NSD3439T	228A
NSDU51	210
NSL5076A	3007
NSL5253	3024
NSL5353	3021
NSN71L	3061
NSN71R	3052
NSQ4110L1	5626
NSQ8050L2	716
NSQ8050L2-W2	716
NSS1021	125
NT06	56004
NT08	56004
NT010	56004
NT015	56004
NT3C10	5186A
NT3C11	5187A
NT3C12	5127A
NT3C13	5189A
NT3C15	5191A
NT3C16	5192A
NT3C18	5194A
NT3C20	5196A
NT3C22	5197A
NT3C24	5198A
NT3C27	5200A
NT3C30	5202A
NT3C33	5203A
NT3C36	5204A
NT3C39	5205A
NT3C43	5206A
NT3C47	5208A
NT3C51	5210A
NT3C56	5212A
NT3C62	5214A
NT3C68	5215A
NT3C75	5216A
NT3C82	5217A
NT3C91	5219A
NT3C100	5220A
NT16	56004
NT18	56004
NT26	56004
NT28	56004
NT36	56006
NT38	56006
NT46	56006
NT48	56006
NT50C4V7	5069A
NT50C5V1	5116A
NT50C5V6	136A
NT50C6V2	137A
NT50C6V8	5071A
NT50C7V5	138A

To Be Replaced	ECG Replacement
NT50C8V2	5072A
NT50C9V1	139A
NT50C10	140A
NT50C11	5074A
NT50C12	142A
NT50C13	143A
NT50C15	145A
NT50C16	5075A
NT50C18	5077A
NT50C20	5079A
NT50C22	5080A
NT50C24	5081A
NT50C27	146A
NT50C30	5084A
NT50C33	147A
NT55C2V7	5063A
NT55C3	5065A
NT55C3V3	5066A
NT55C3V6	134A
NT55C3V9	5067A
NT55C4V3	5068A
NT55C4V7	5069A
NT55C5V1	5116A
NT55C5V6	136A
NT55C6V2	137A
NT55C6V8	5071A
NT55C7V5	138A
NT55C8V2	5072A
NT55C9V1	139A
NT55C10	140A
NT55C11	5074A
NT55C12	142A
NT55C13	143A
NT55C16	5075A
NT55C18	5077A
NT55C20	5079A
NT55C22	5080A
NT55C24	5081A
NT55C27	146A
NT55C30	5084A
NT55C33	147A
NT55C36	5085A
NT55C39	5086A
NT55C43	5087A
NT55C47	5088A
NT55C51	5089A
NT55C56	5090A
NT55C62	149A
NT55C68	5092A
NT55C75	5093A
NT55C82	150A
NT55C91	5095A
NT55C100	5096A
NT55C110	151A
NT55C120	5097A
NT55C130	5098A
NT55C150	5100A
NT55C160	5101A
NT55C180	5103A
NT55C200	5105A
NT56	56008
NT58	56008
NT66	56008
NT68	56008
NT76	56010
NT77C2	5127A
NT77C2V7	5063A
NT77C3V3	5111A
NT77C3V6	5112A
NT77C3V9	5113A
NT77C4V3	5114A
NT77C4V7	5115A
NT77C5V1	5116A
NT77C5V6	5117A
NT77C6V2	5119A
NT77C6V8	5120A
NT77C7V5	5121A
NT77C8V2	5122A
NT77C9V1	5124A
NT77C10	5125A
NT77C11	5126A
NT77C13	5128A
NT77C15	5130A
NT77C16	5131A
NT77C20	5135A
NT77C22	5136A
NT77C24	5137A
NT77C27	5139A
NT77C30	5141A
NT77C33	5142A
NT77C36	5143A
NT77C39	5144A
NT77C43	5145A
NT77C47	5146A
NT77C51	5147A
NT77C56	5148A
NT77C62	5150A
NT77C68	5151A
NT77C75	5152A
NT77C91	5155A
NT77C100	5156A
NT77C110	5157A
NT77C120	5158A
NT77C130	5159A
NT77C150	5161A
NT77C160	5162A
NT77C180	5164A
NT77C200	5166A
NT78	56010
NT80C12	5188A
NT86	56010
NT88	56010
NT101	5401
NT102	6402
NT110	56004

To Be Replaced	ECG Replacement
NT115	56004
NT210	56004
NT215	56004
NT310	56006
NT315	56006
NT410	56006
NT415	56006
NT510	56008
NT515	56008
NT610	56008
NT615	56008
NT710	56010
NT715	56010
NT810	56010
NT815	56010
NT1101C	5063A
NT1102C	5066A
NT1103C	5067A
NT1104C	5069A
NT1105C	136A
NT1106C	5071A
NT1107C	138A
NT1108C	5072A
NT1110C	140A
NT1111C	5074A
NT1112C	142A
NT1113C	143A
NT1115C	145A
NT1116C	5075A
NT1118C	5077A
NT1120C	5079A
NT1122C	5080A
NT1124C	5081A
NT1127C	146A
NT1130C	5084A
NT1133C	147A
NT1301C	5063A
NT1302C	5111A
NT1303C	5113A
NT1304C	5115A
NT1305C	5117A
NT1306C	5120A
NT1307C	5121A
NT1308C	5122A
NT1309C	5124A
NT1310C	5125A
NT1311C	5126A
NT1312C	5127A
NT1313C	5128A
NT5324C	5130A
NT5325C	5131A
NT5326C	5133A
NT5327C	5135A
NT5328C	5136A
NT5329C	5137A
NT5330C	5139A
NT5331C	5141A
NT5332C	5142A
NT5333C	5143A
NT5334C	5144A
NT5335C	5145A
NT5336C	5146A
NT5337C	5147A
NT5338C	5148A
NT5339C	5150A
NT5340C	5151A
NT5341C	5152A
NT5342C	5153A
NT5343C	5155A
NT5344C	5156A
NT5345C	5157A
NT5346C	5158A
NT5348C	5161A
NT5351C	5166A
NT5506	5063A
NT5507	5065A
NT5508	5066A
NT5509	134A
NT5510	5067A
NT5511	5068A
NT5512	5069A
NT5513	5116A
NT5514	136A
NT5515	137A
NT5516	5071A
NT5517	138A
NT5518	5072A
NT5520	140A
NT5521	5074A
NT5522	142A
NT5523	143A
NT5524	145A
NT5525	5075A
NT5526	5077A
NT5527	5079A
NT5528	5080A
NT5529	5081A
NT5530	146A
NT5531	5084A
NT5532	147A
NT5533	5085A
NT5534	5086A
NT5535	5087A
NT5536	5088A
NT5537	5089A
NT5538	5090A
NT5539	149A
NT5540	5092A
NT5541	5093A
NT5542	150A
NT5543	5095A
NT5544	5096A
NT5545	151A
NT5546	5097A
NT5547	5098A

To Be Replaced	ECG Replacement
NT5548	5100A
NT5549	5101A
NT5550	5103A
NT5551	5105A
NT7706	5063A
NT7708	5111A
NT7709	5112A
NT7710	5113A
NT7711	5114A
NT7712	5115A
NT7713	5116A
NT7714	5117A
NT7715	5119A
NT7716	5120A
NT7717	5121A
NT7719	5124A
NT7720	5125A
NT7721	5126A
NT7722	5127A
NT7723	5128A
NT7724	5130A
NT7725	5131A
NT7726	5133A
NT7727	5135A
NT7728	5136A
NT7729	5137A
NT7730	5139A
NT7731	5141A
NT7732	5142A
NT7733	5143A
NT7734	5144A
NT7735	5145A
NT7736	5146A
NT7737	5147A
NT7738	5148A
NT7739	5150A
NT7740	5151A
NT7741	5152A
NT7743	5155A
NT7744	5156A
NT7745	5157A
NT7746	5158A
NT7747	5159A
NT7748	5161A
NT7749	5162A
NT7750	5164A
NT7751	5166A
NT9970	5065A
NT9971	134A
NT9972	5068A
NT9974	137A
NT9981	5112A
NT9982	5114A
NT9983	5116A
NT9984	5119A
NTC-5	108
NTC-7	199
NTC-9	198
NTC-12	165
NTC-13	109
NTC-14	109
NTC-16	503
NTC-17	506
NTC-19	116
NTC-20	5074A
NTC21	712
NTC-21	712
NTC77C18	5133A
NU34	109
NU398B	116
NV004	614
NV009	614
NZ-206	5070A
00415	159
003462	107
00A07	787
01F-SL8020	703A
02Z5.6A	136A
02Z6.2A	137A
02Z6.2W	137A
02Z6.8A	5071A
02Z7.5A	138A
02Z8.2A	5072A
02Z9.1A	139A
02Z-10A	140A
02Z10A	140A
02Z11A	5074A
02Z12A	142A
02Z12GR	5021A
02Z13A	143A
02Z15A	145A
02Z16A	5075A
02Z18A	5077A
02Z24A	5081A
03A02	123A
03A03	123A
03A05	108
03A06	294
03A07	123A
03A09	312
03A10	222
03A10	222
03A11	199
03A12	123AP
03A02	123A
03A03	123A
03A05	108
03A06	294
03A07	123A
03A09	312
04S05	302
04S06	235
04S11	152
04S05	302
04S06	235

To Be Replaced	ECG Replacement
05A01	519
05A03	109
05A05	519
05A06	177
05A07	116
05A08	614
05A09	156
05A01	519
05A03	109
05A05	519
05A06	177
05A07	116
05A08	614
05A09	156
05Z6.2	137A
05Z-6.2L	137A
05Z6.8	5071A
05Z7.5	138A
05Z8.2	5072A
05Z9.1	139A
05Z10	140A
05Z11	5074A
05Z12	142A
05Z13	143A
05Z15	145A
05Z16	5075A
05Z18	5077A
05Z24	5081A
07B2B	708
07B27	708
09-306113	177
09-306195	177
09-308084	1127
09-309060	123A
09A07	787
0101	116
0234	116
0-15551	194
0A2	507
0A6	109
0A7	109
0A8	116
0A9	109
0A9D	109
0A9Z	109
0A10	5800
0A-10	128
0A47	109
0A50	109
0A70	109
0A71	109
0A71C	109
0A72	109
0A73	109
0A73C	109
0A74	109
0A74A	109
0A79	109
0A81	109
0A81C	109
0A85	109
0A85C	109
0A90	109
0A-90	109
0A90FM	110
0A90G	109
0A-90G	109
0A-90(G)	109
0A90GA	109
0A90LF	109
0A90MLF	109
0A90Z	109
0A90ZA	109
0A91	109
0A-91	109
0A91	109
0A92	109
0A95	110
0A-95	110
0A99	109
0A126/5	5069A
0A126/10	5020A
0A126/12	142A
0A126-12	142A
0A126/14	144A
0A127	116
0A128	116
0A129	116
0A130	116
0A131	116
0A132	116
0A134Q	109
0A150	109
0A159	109
0A160	109
0A161	109
0A172	109
0A174	109
0A180	116
0A200	177
0A202	177
0A205	177
0A210	116
0A211	116
0A214	116
0A541	109
0A909	109
0A1265	135A
0A12610	140A
0A12612	142A
0A12614	144A
0AZ200	5069A
0AZ201	135A
0AZ202	136A
0AZ203	137A

To Be Replaced	ECG Replacement
0AZ204	5071A
0AZ205	138A
0AZ206	5072A
0AZ207	139A
0AZ209	135A
0AZ210	137A
0AZ212	139A
0AZ213	142A
0AZ222	5178AK
0AZ223	5180AK
0AZ224	5181A
0AZ225	5182AK
0AZ226	5183A
0AZ227	5185A
0AZ228	5186A
0AZ229	5187A
0AZ230	5188A
0AZ231	5189A
0AZ232	5191A
0AZ233	5192A
0AZ234	5194A
0AZ235	5196A
0AZ236	5197A
0AZ237	5198A
0AZ240	135A
0AZ241	135A
0AZ242	136A
0AZ243	137A
0AZ244	5014A
0AZ246	5016A
0AZ247	139A
0AZ269	135A
0AZ270	137A
0AZ272	139A
0AZ273	142A
0AZ290	5180AK
0AZ291	5182AK
0AZ292	5185A
0C16	104
0C-16	121
0C19	121
0C20	121
0C22	104
0C-22	121
0C23	104
0C-23	121
0C24	104
0C-24	121
0C25	104
0C-25	121
0C26	104
0C-26	121
0C27	104
0C28	104
0C-28	121
0C29	104
0C-29	121
0C30	131
0C30A	131
0C-30A	121
0C30B	131
0C32	102
0C33	102A
0C34	102A
0C-34	102A
0C35	104
0C-35	121
0C36	104
0C-36	121
0C38	102A
0C-38	102A
0C40	126
0C41	102
0C41A	102A
0C41N	126
0C42	126
0C42N	126
0C43	126
0C43N	126
0C44	126
0C-44	100
0C44N	126
0C45	102A
0C-45	100
0C45N	126
0C46	102A
0C-46	100
0C46N	126
0C47	102A
0C-47	100
0C47N	126
0C50	126
0C53	160
0C54	160
0C55	160
0C56	102A
0C57	102A
0C58	102A
0C59	102A
0C60	102A
0C65	102A
0C-65	102A
0C66	102A
0C-66	102A
0C70	102A
0C-70	102A
0C70N	102A
0C71	102A
0C-71	102A
0C71A	102A
0C-71A	102A
0C71N	102A
0C-71N	102A
0C72	102A
0C-72	102A

To Be Replaced	ECG Replacement
0C73	102A
0C-73	102A
0C74	102A
0C-74	102A
0C74N	102A
0C75	102A
0C-75	102A
0C75N	102A
0C-75N	102A
0C76	102A
0C77	102A
0C-77	102A
0C77M	102A
0C79	102A
0C-79	102A
0C80	102A
0C81	102A
0C81D	102A
0C81DD	102A
0C-81DD	102A
0C83	158
0C84	158
0C110	102A
0C120	102A
0C122	102A
0C123	102A
0C130	126
0C-130	100
0C139	101
0C140	101
0C-140	100
0C141	101
0C169	160
0C-169	160
0C169R	160
0C170	160
0C-170	160
0C170N	160
0C170R	160
0C170V	160
0C171	160
0C-171	160
0C171N	160
0C171R	160
0C171V	160
0C200	159
0C201	159
0C202	159
0C203	159
0C204	159
0C205	159
0C206	159
0C207	159
0C302	102A
0C303	102A
0C304	102A
0C-304	176
0C304-1	102A
0C-304/1	158
0C304-2	102A
0C-304/2	158
0C304-3	102A
0C-304/3	158
0C304N	102A
0C305	102A
0C305-1	102A
0C-305/1	158
0C305-2	102A
0C-305/2	158
0C306	102A
0C306-1	102A
0C-306/1	158
0C306-2	102A
0C-306/2	158
0C306-3	102A
0C-306/3	158
0C307	102A
0C-307	102A
0C307-1	102A
0C307-2	102A
0C307-3	102A
0C308	102A
0C-308	102A
0C309	102A
0C309-1	102A
0C309-2	102A
0C309-3	102A
0C318	102A
0C-318	102A
0C320	160
0C330	102A
0C-330	102A
0C331	126
0C340	102A
0C-340	102A
0C341	126
0C-341	102A
0C342	126
0C-342	102A
0C343	126
0C-343	102A
0C350	102A
0C-350	102A
0C351	126
0C-351	102A
0C360	102A
0C-360	102A
0C361	126
0C362	126
0C-362	102A
0C363	126
0C-363	102A
0C364	102A
0C-364	102A
0C390	126

To Be Replaced	ECG Replacement
0C-390	126
0C400	160
0C410	160
0C-410	100
0C430	159
0C430K	159
0C440	159
0C440K	159
0C443	159
0C443K	159
0C445	159
0C445K	159
0C449	159
0C449K	159
0C450	159
0C460	159
0C460K	159
0C463	159
0C463K	159
0C465	159
0C465K	159
0C466	159
0C466K	159
0C467	159
0C467K	159
0C468	159
0C468K	159
0C469	159
0C469K	159
0C470	159
0C470K	159
0C601	102A
0C602	102A
0C-602	102A
0C602SP	102A
0C602SQ	102A
0C603	102A
0C604	102A
0C-604	102A
0C604SP	102A
0C612	126
0C-612	126
0C613	126
0C-613	126
0C614	126
0C-614	126
0C615	126
0C-615	160
0C615N	160
0C700	159
0C700A	159
0C700B	159
0C702	159
0C702A	159
0C702B	159
0C704	159
0C711	102A
0C740	159
0C740G	159
0C740M	159
0C740O	159
0C742	159
0C742G	159
0C742M	159
0C742O	159
0C810	102A
0C-975	126
0D-SS1885XT	116
0F66	506
0F129	102A
0F-129	102A
0F156	177
0F160	116
0F162	177
0F164	116
0F173	109
0G-30L125	116
0N047204-2	123A
0N67A	109
0N174	160
0N271	123A
0N274	123A
0N47204-1	123A
0OV60529	128
0RF-2	128
0S70	109
0S492	176
0S16308	116
0S-16308	116
0SD-0033	138A
0SS16308	109
0SS-16308	116
0SS16685	109
0SS-16685	109
0SS36503	116
0SS36685	116
0SS36885	116
0SS-36885	116
0V02	506
0Y101	116
0Y5061	116
0Y-5061	116
0Y5062	116
0Y-5062	116
0Y5063	116
0Y5064	116
0Y5065	116
0Y5066	116
0Y5067	125
0Z3.6T5	134A
0Z3.6T10	134A
0Z5.1T5	135A
0Z5.1T10	135A
0Z5.6T5	136A
0Z6.2T5	137A

To Be Replaced	ECG Replacement
OZ6.2T10	137A
OZ10T5	140A
OZ10T10	140A
OZ12T5	142A
OZ12T10	142A
OZ15T5	145A
OZ15T10	145A
OZ27T5	146A
OZ27T10	146A
P00347100	159
P00347101	159
P04-41-0025-001	519
P04-42-0011	519
P04-44-0028	123A
P04-45-0014-P2	123A
P04-45-0014-P5	123A
P04-45-0015-P1	159
P04-45-0016-P1	159
P04-45-0026-P5	128
P04-450016-002	159
P0445-0034-1	181
P0445-0034-2	181
P04410025-003	519
P04410042-001	519
P04410042-002	519
P04440028-001	123A
P04440028-009	123A
P04440028-014	123A
P04440028-8	123A
P04440032-001	123A
P04450016-004	159
P04450026P5	128
P04450032-1	218
P04450034-1	181
P04450034-2	181
P04450037	181
P04450040-002	223
P1A	121
P1A5	116
P1B	159
P1B5	116
P1C	159
P1C5	116
P1CG	159
P1D	159
P1D5	116
P1E	219
P1E-1	121
P1E-1BLK	219
P1E-1BLU	219
P1E-1GRN	219
P1E-1RED	219
P1E-1VIO	219
P1E-2BLK	219
P1E-2BLU	219
P1E-2GRN	219
P1E-2RED	219
P1E-2VIO	219
P1E-3BLK	219
P1E-3BLU	219
P1E-3GRN	219
P1E-3RED	219
P1E-3VIO	219
P1F	127
P1G	121
P1H	159
P1J	159
P1K	121
P1KBLK	121
P1KBLU	121
P1KBRN	121
P1KGRN	121
P1KORN	121
P1KRED	121
P1KYEL	121
P1L	102A
P1L4956	102A
P1M	129
P1N	159
P1N-1	159
P1N-2	159
P1N-3	159
P1P	159
P1P-1	159
P1R	104
P1T	121
P1V	185
P1V-1	185
P1V-2	185
P1V-3	185
P1V-4	153
P1W	159
P1Y	127
P2A	159
P2A5	116
P2B	153
P2B5	116
P2C	104
P2C5	116
P2D	121
P2D5	116
P2DBLU	121
P2DBRN	121
P2DGRN	121
P2DORN	121
P2DRED	121
P2DYEL	121
P2E	159
P2F	176
P2G	159
P2GE	159
P2H	159
P2J	180
P2K	153
P2L	159

To Be Replaced	ECG Replacement
P2M-1	159
P2M-2	159
P2M-3	159
P2P	159
P2R	104
P2S	159
P2T	185
P2T-1	185
P2T-2	185
P2T-3	185
P2T-4	185
P2U	189
P2U-1	189
P2U-2	211
P2V	189
P2W	159
P2Y	159
P2Z	179
P3/2H	116
P3A	197
P3A5	116
P3B	158
P3B5	116
P3C	159
P3C5	116
P3CA	159
P3D	102A
P3D5	116
P3E	131
P3EBLK	104
P3EBLU	104
P3EGRN	104
P3ERED	104
P3H	127
P3J	127
P3K	189
P3M	185
P3N	185
P3N-1	185
P3N-2	185
P3N-3	185
P3N-4	185
P3N-5	183
P3P	185
P3P-1	185
P3P-2	185
P3P-3	185
P3P-4	185
P3P-5	185
P3R	131
P3R-1	131
P3R-2	131
P3R-3	131
P3R-4	131
P3S	185
P3T	131
P3T-1	131
P3T-2	131
P3U	197
P3UA	183
P3V	242
P3W	219
P3Y	189
P3Z	159
P4A5	116
P4B	193
P4B5	116
P4C	159
P4C5	116
P4D	104
P4D5	116
P4E	185
P4E-1	183
P4E-2	183
P4E-3	242
P4E-4	242
P4F	127
P4G	159
P4H	127
P4J	242
P4J148	152
P4K	159
P4L	104
P4M	121
P4N	104
P4P	159
P4R	159
P4S	185
P4T	183
P4U	185
P4V	185
P4V-1	185
P4V-2	183
P4W	153
P4W-1	185
P4W-2	185
P4Y	159
P4Z	128
P5A5	116
P5B	159
P5B5	116
P5C	159
P5C5	116
P5D	159
P5D5	116
P5F	242
P5H	153
P5L	185
P5M	187
P5R	185
P5S	242
P5U	153
P6/2H	116
P6A5	116
P6B5	116

To Be Replaced	ECG Replacement
P6C5	116
P6D5	116
P6E	185
P6RP8	125
P6RP10	125
P7A5	116
P7B5	116
P7C5	116
P7D5	116
P8/2H	116
P8B	197
P8C	292
P8H	153
P13T1	6402
P15	113
P16	114
P17	115
P20	116
P32H	116
P34-3	131
P62H	116
P67	159
P82H	116
P100	116
P100A	116
P100B	116
P100D	116
P100G	116
P100J	116
P150A	116
P150B	116
P150D	116
P150G	116
P150J	116
P200	116
P218-1	188
P218-2	189
P346	108
P400	116
P480A0018	128
P480A0022	159
P480A0023	159
P480A0027	159
P480A0028	123A
P480A0029	123A
P504	5940
P506	5940
P580	125
P600	116
P800	125
P1000	125
P1000A	159
P1004	5942
P1006	5942
P1172	177
P1172-1	177
P1901-48	199
P1901-50	123A
P1901-70	159
P2004	5942
P2006	5942
P2010	5942
P2015	727
P2271	130
P2440	156
P3139	130
P3172	175
P3309	5079A
P4069	128
P4326	177
P5034	130
P5100	125
P5148	175
P5149	130
P5152	123A
P5153	123A
P-6006	177
P6009	242
P6022A	175
P6128	175
P6500A	181
P6786	128
P6804	175
P7109	156
P7394	177
P7776	117
P8393	123A
P-8393	123A
P8394	123A
P8870	121
P8890	121
P8890A	121
P8890L	121
P9459	116
P9623	123A
P9962-1	128
P9962-2	128
P9962-4	128
P9962-5	128
P10115	116
P-10115	116
P10115A	125
P10155	109
P10156	116
P10156A	125
P10619-1	130
P-10954-1	130
P-10954-2	130
P-11748-1	128
P-11810-1	181
P-11901-1	130
P-11901-3	181
P-11903-1	128
P12407-1	234
P15153	123A

To Be Replaced	ECG Replacement
P21309	112
P21316	116
P21317	116
P21344	139A
P21443	116
P31898	121
P-31898	121
P38103/507-10	145A
P50200-11	130
P64447	123A
P69941	199
P75534	121
P75534-1	121
P75534-2	104
P75534-3	104
P75534-4	121
P75534-5	121
P633024	128
P633024C(Sylvania)	128
P633024G	128
P633567	123A
P6450026	128
P6460006	102
P6460037	102
P6480001	121
P/FTV/117	152
P/N14-603-02	161
P/N297L010C01	234
P/N10000020	123A
P-T-30	121
PA05	5322
PA069	116
PA-069	116
PA070	116
PA071	116
PA3	116
PA-3	116
PA10	5322
PA20	5322
PA40	5324
PA60	5326
PA200	116
PA234	717
PA239	721
PA243	717
PA277	804
PA300	116
PA301	1025
PA305	116
PA305A	116
PA306	733
PA310	116
PA310A	116
PA315	116
PA315A	116
PA320	116
PA-320	116
PA320A	116
PA-320A	116
PA320B	116
PA-320B	116
PA325	116
PA325A	116
PA325B	116
PA330	116
PA330A	116
PA330B	116
PA340	116
PA340A	116
PA340B	116
PA350	116
PA350A	116
PA360	116
PA360A	116
PA380	125
PA400	116
PA-400	1090
PA400(IC)	1090
PA401	1090
PA500	1090
PA-500	1090
PA500X	1090
PA501	1148
PA501X	1090
PA600	116
PA1000	159
PA1001	159
PA1001A	159
PA7000/591	909D
PA7001/0001	123A
PA7001/501	909
PA7001/502	909D
PA7001/503	941
PA7001/505	923
PA7001/518	7430
PA7001/519	7420
PA7001/520	7410
PA7001/521	7400
PA7001/522	7440
PA7001/523	7451
PA7001/524	7453
PA7001/525	7402
PA7001/526	7401
PA7001/527	7404
PA7001/528	7405
PA7001/529	7474
PA7001/530	7470
PA7001/531	7473
PA7001/532	7472
PA7001/533	7460
PA7001/539	7454
PA7001/591	909D
PA7001/593	74145
PA7615	116
PA7703	703A

To Be Replaced	ECG Replacement
PA7703E	703A
PA7703X	703A
PA7709	909
PA7709C	909
PA7710-31	910
PA7710-39	910
PA7711-31	911
PA7741	941
PA7741C	941
PA8260	199
PA8261	145A
PA8543	199
PA8645	116
PA8900	186
PA9004	199
PA9005	199
PA9006	123A
PA9154	160
PA9155	160
PA9156	102A
PA9157	102A
PA9158	158
PA9160	116
PA9267	137A
PA9483	192
PA10556	116
PA-10556	108
PA10880	160
PA10887	116
PA10889-1	158
PA-10889-1	121
PA10889-2	158
PA-10889-2	121
PA10890	104
PA-10890	121
PA10890-1	121
PA-10890-1	121
PADT20	160
PADT21	160
PADT22	160
PADT23	160
PADT24	160
PADT25	160
PADT26	160
PADT27	160
PADT28	160
PADT30	160
PADT31	160
PADT35	160
PADT40	160
PADT50	104
PADT51	160
PAR12	121
PAR-12	121
PB05	5322
PB10	5322
PB40	5324
PB60	5326
PB110	121
PBC107	199
PBC107A	199
PBC107B	199
PBC108	199
PBC108A	199
PBC108B	199
PBC108C	199
PBC109	199
PBC109B	199
PBC109C	199
PBC182	108
PBC183	123A
PBC184	192
PBD352301	2011
PBD352302	2012
PBD352303	2013
PBE3014-1	158
PBE3014-2	158
PBE3020-1	158
PBE3020-2	103A
PBE3162	158
PBE3162-1	102A
PBE3162-2	102A
PBE3322	109
PBX103	102
PBX113	102
PBZ0	5322
PC0600A	610
PC0601A	611
PC0603A	613
PC0604A	614
PC0610A	610
PC0611A	611
PC0620A	610
PC107	610
PC107A	610
PC127	614
PC127A	614
PC128	614
PC128A	614
PC132	611
PC132A	611
PC133	613
PC133A	613
PC135	611
PC135A	611
PC136	613
PC136A	613
PC138	610
PC138A	610
PC139	610
PC139A	610
PC140	610
PC140A	610
PC141	610
PC141A	610

To Be Replaced	ECG Replacement
PC202	610
PC203	610
PC204	610
PC205	610
PC207	610
PC208	610
PC209	610
PC210	610
PC211	610
PC212	610
PC213	610
PC214	610
PC215	610
PC216	610
PC217	610
PC218	610
PC219	610
PC220	610
PC221	610
PC222	610
PC223	610
PC224	610
PC225	610
PC226	610
PC227	610
PC228	610
PC229	610
PC230	610
PC231	610
PC232	610
PC233	610
PC234	610
PC235	610
PC303	611
PC304	611
PC305	611
PC309	611
PC310	611
PC315	611
PC316	611
PC317	611
PC321	611
PC322	611
PC323	611
PC327	611
PC328	611
PC329	611
PC333	611
PC334	611
PC335	611
PC504	613
PC505	613
PC510	613
PC511	613
PC516	613
PC517	613
PC523	613
PC529	613
PC534	613
PC535	613
PC554	1142
PC563H2	1081A*
PC604	614
PC605	614
PC610	614
PC611	614
PC616	614
PC617	614
PC622	614
PC623	614
PC628	614
PC629	614
PC634	614
PC635	614
PC1026C	1226
PC1066T	158
PC1067T	158
PC1068T	158
PC1400A	610
PC1401A	611
PC1403A	613
PC1404A	614
PC1410A	610
PC1411A	611
PC1414A	614
PC1879-004	140A
PC2600A	610
PC2601A	611
PC2603A	613
PC2604A	614
PC2610A	610
PC2611A	611
PC2613A	613
PC2614A	614
PC3002	158
PC3003	158
PC3004	121
PC3005	158
PC3006	158
PC3007	158
PC3009	158
PC3010	131
PC4004	116
PC4900-1	128
PC7327C	9914
PC-20003	1003
PC-20004	1021
PC-20005	1027
PC-20006	1024
PC-20007	1006
PC-20008	720
PC-20012	1030
PC-20015	812
PC-20018	720
PC20018	720

To Be Replaced	ECG Replacement
PC-20023	1010
PC-20024	722
PC-20030	722
PC-20045	801
PC-20051	1082
PC-20069	1060
PC-20070	1226
PC-20071	1135
PCO2P1/2	116
PD05	166
PD10	166
PD20	167
PD40	168
PD60	169
PD80	170
PD100	170
PD101	116
PD102	116
PD103	116
PD104	116
PD105	116
PD106	116
PD107	116
PD107A	116
PD108	116
PD110	116
PD111	116
PD114	125
PD115	125
PD116	125
PD122	116
PD125	116
PD129	116
PD130	116
PD131	116
PD132	116
PD133	116
PD134	116
PD135	116
PD137	177
PD154	116
PD155	116
PD910	116
PD913	125
PD914	125
PD915	125
PD916	125
PD1011	166
PD1020	169
PD-1567	169
PD6000	5002A
PD6000A	5002A
PD6002	5005A
PD6002A	134A
PD6003	134A
PD6003A	134A
PD6004	134A
PD6004A	5067A
PD6005A	5068A
PD6006	135A
PD6006A	5069A
PD6007	135A
PD6007A	135A
PD6008	136A
PD6008A	136A
PD6009	137A
PD6009A	137A
PD6010	5014A
PD6010A	5071A
PD6011A	138A
PD6012	5016A
PD6012A	5072A
PD6013	139A
PD6013A	139A
PD6014	140A
PD6014A	140A
PD6015A	5074A
PD6016	142A
PD6016A	142A
PD6017A	143A
PD6018	145A
PD-6018	145A
PD-6018A	145A
PD6018A	145A
PD6019A	5075A
PD6020	5027A
PD6020A	5077A
PD6041	5063A
PD6042	5065A
PD6043	5066A
PD6044	134A
PD6045	5067A
PD6046	5068A
PD6047	5069A
PD6048	135A
PD6049	136A
PD6049C	136A
PD6050	137A
PD6051	5071A
PD6052	138A
PD6053	5072A
PD6054	139A
PD6055	140A
PD6056	5074A
PD6057	142A
PD6058	143A
PD-6059	145A
PD6059	145A
PD6060	5075A
PD6061	5077A
PD9093-59	9093
PD9094-59	9094
PD9097-59	9097
PD9099-59	9099
PD9930-59	9930

To Be Replaced	ECG Replacement
PD9932-59	9932
PD9933-59	9933
PD9935-59	9935
PD9936-59	9936
PD9937-59	9937
PD9944-59	9944
PD9945-59	9945
PD9946-59	9946
PD9948-59	9948
PD9949-59	9949
PD9950-59	9950
PD9951-59	9951
PD9961-59	9961
PD9962-59	9962
PD9963-59	9963
PE05	5312
PE10	5312
PE20	5313
PE40	5314
PE60	5315
PE80	5316
PE401	116
PE-401	116
PE401N	116
PE402	116
PE403	116
PE404	116
PE405	116
PE406	116
PE408	125
PE410	125
PE502	116
PE504	116
PE506	116
PE508	125
PE510	125
PE3001	123A
PE5025	233
PE8050	293
PE8550	294
PE9093-59	9093
PE9094-59	9094
PE9097-59	9097
PE9099-59	9099
PE9930-59	9930
PE9932-59	9932
PE9933-59	9933
PE9935-59	9935
PE9936-59	9936
PE9937-59	9937
PE9944-59	9944
PE9945-59	9945
PE9946-59	9946
PE9948-59	9948
PE9949-59	9949
PE9950-59	9950
PE9951-59	9951
PE9961-59	9961
PE9962-59	9962
PE9963-59	9963
PEP2	123A
PEP5	123A
PEP6	123A
PEP7	123A
PEP8	123A
PEP9	123A
PEP95	172A
PEP1001	108
PEP2001	128
PET-101-1	108
PET1001	192
PET1002	123A
PET1075	108
PET1075A	154
PET2001	123A
PET2002	123A
PET3001	108
PET3704	123A
PET3705	123A
PET3706	123A
PET4001	128
PET4002	123A
PET4003	199
PET6001	123A
PET6002	123A
PET8000	123A
PET8001	123A
PET8002	123A
PET8003	123A
PET8004	123A
PET8201	108
PET8250	108
PET8251	108
PET8300	108
PET9002	123A
PET9021	128
PET9022	128
PF05	5304
PF10	5304
PF20	5304
PF40	5304
PF60	5305
PF80	5306
PF100	5307
PF-AR15	130
PF-AR18	175
PG107	610
PG107A	610
PG207	610
PG207A	610
PG307	610
PG307A	610
PG310	611
PG310A	611
PG322	613

To Be Replaced	ECG Replacement
PG322A	613
PG333	614
PG333A	614
PG33024G	128
PGR-24	5802
PH9-221	166
PH9D522/1	169
PH9D522M	166
PH9D5221	166
PH9DS22	116
PH9DS221	166
PH25C22	116
PH25C22/1	116
PH25C221	166
PH108	506
PH-108	116
PH109	125
PH204	116
PH208	116
PH404	116
PH1021	116
PHV1	292
PI-10.131	159
PIC	159
PIK	121
PIL/4956	160
PIT-37	199
PIT-50	159
PIT-74	128
PIT-79	159
PIT-81	159
PIV	197
PIV-1	197
PIV-2	197
PIV-3	197
PL-150-001-9-005	109
PL-150-006-9-001	109
PL-150-040-9-002	177
PL-151-030-9-001	177
PL-151-030-9-005	116
PL-151-032-9-004	177
PL-151-035-9-001	177
PL-151-040-9-001	177
PL-151-040-9-002	177
PL-151-040-9-003	116
PL-151-045-9-001	116
PL-151-045-9-002	177
PL-151-045-9-003	506
PL-151-045-9-004	116
PL-152-042-9-001	5072A
PL-152-044-9-001	139A
PL-152-047-9-001	137A
PL-152-051-9-001	139A
PL-152-052-9-002	5070A
PL-152-054-9-001	5072A
PL-172-010-9-001	152
PL-172-013-9001	236
PL-172-014-9-001	152
PL-172-014-9-002	282
PL-172-024-9-001	186A
PL-172-024-9-002	235
PL-172-024-9-003	236
PL-176-025-9-001	199
PL-176-026-9-001	107
PL-176-029-9-001	123A
PL-176-029-9-002	195A
PL-176-031-9-001	289
PL-176-031-9-002	199
PL-176-037-9-001	107
PL-176-042-9-001	229
PL-176-042-9-002	123A
PL-176-042-9-003	199
PL-176-042-9-004	123A
PL-176-042-9-005	186A
PL-176-042-9-006	123A
PL-176-047-9-001	289
PL-176-049-9-002	123A
PL-177-006-9-001	159
PL-177-006-9-002	290
PL-182-009-9-001	132
PL-182-014-9-002	123A
PL-182-014-9-002(FET)	133
PL-307-007-9-002	1102
PL-307-047-9-002	724
PL1021	161
PL1022	161
PL1023	161
PL1024	107
PL1025	107
PL1026	107
PL1031	159
PL1033	159
PL1034	159
PL1051	108
PL1052	123A
PL1053	108
PL1054	123A
PL1055	108
PL1061	108
PL1062	108
PL1063	108
PL1064	108
PL1065	108
PL1066	161
PL1067	161
PL1081	108
PL1082	108
PL1083	128
PL1084	128
PL1085	171
PL1091	132
PL1092	132
PL1093	132
PL1094	132
PL1101	159

To Be Replaced	ECG Replacement
PL1102	159
PL1103	159
PL1104	159
PL1111	161
PL1112	161
PL1113	107
PL3065	712
PLE37	185
PLE-48	152
PLE52	184
PLL02	1167
PLL02A	1167
PLL-02A	1167
PLL02A-F	1167
PLL02A-G	1233
PLL02AG	1233
PLL02G	1233
PLL03A	1272
PLZ52	184
PM194	107
PM195	107
PM195A	108
PM725CJ	925
PM741CJ	941
PM741CY	941D
PM1120	234
PM1121	123A
PMC-QP0010	130
PMC-QP0012	130
PMC-QP0040	181
PMC-QS-0280	129
PMC-QS-0320	128
PMC-QS-0400	128
PMT1767	108
PN	159
PN26	175
PN66	152
PN204	116
PN350	130
PN3563	108
PN3566	123AP
PN4355	159
PO93	109
POWER12	121
POWER25	121
POWER40	105
POWER60	105
POWER80	105
POWER99	121
POWER299	121
POWER500	105
PP3000	130
PP3001	181
PP3003	130
PP3004	181
PP3006	130
PP3007	181
PP3008	280
PP3250	152
PP3310	152
PP3312	152
PP3647	181
PPR1006	186
PPR1008	186
PQ27	160
PQ28	158
PQ29	158
PQ30	160
PQ31	104
PR515	135A
PR605	135A
PR617	142A
PR620	145A
PR-620	145A
PR804	135A
PR9000	5846
PR9000R	5847
PR9001	5846
PR9001R	5847
PR9002	5848
PR9002R	5849
PR9003	5848
PR9003R	5849
PR9004	5866
PR9004R	5867
PR9005	5866
PR9005R	5867
PR9006	5868
PR9006R	5869
PR9007	5868
PR9007R	5869
PR9008	5886
PR9008R	5887
PR9009	5886
PR9009R	5887
PR9010R	5891
PR9011	5890
PR9011R	5891
PR9012	5998
PR9012R	5999
PR9013	5998
PR9013R	5999
PR9014	6002
PR9014R	6003
PR9015	6002
PR9015R	6003
PR9023	5998
PR9024	5998
PR9025	6002
PR9026	6002
PR9034	6020
PR9034R	6021
PR9035	6022
PR9035R	6023
PR9036	6026

To Be Replaced	ECG Replacement
PR9036R	6027
PR9037	6030
PR9037R	6031
PR9038	6034
PR9038R	6035
PR9039	6038
PR9039R	6039
PR9040	6040
PR9040R	6041
PR9041	6042
PR9041R	6043
PR9042	6042
PR9042R	6043
PR9043	6044
PR9043R	6045
PR9044	6044
PR9044R	6045
PRC2A	5483
PRC5A	5483
PRC10A	5483
PRC15A	5483
PRC20A	5483
PRD105	137A
PRD110	137A
PRD120	137A
PRD140	137A
PRD160	137A
PRS3017	135A
PRT-101	123A
PRT101	154
PRT-104	123A
PRT-104-1	123A
PRT-104-2	123A
PRT-104-3	123A
PRT-104-4	128
PS005	116
PS08	5514
PS010(Diode)	116
PS010(SCR)	5514
PS015	116
PS020(Diode)	116
PS020(SCR)	5514
PS025	116
PS-025	116
PS030(Diode)	116
PS030(SCR)	5517
PS-035	116
PS035(Diode)	116
PS035(SCR)	5517
PS040	116
PS-040	116
PS050	116
PS060	116
PS-060	116
PS1	121
PS-1	121
PS18	5514
PS28	5514
PS38	5515
PS48	5515
PS58	5516
PS63A205	519
PS68	5516
PS105	116
PS110(Diode)	116
PS110(SCR)	5514
PS-120	116
PS120(Diode)	116
PS120(SCR)	5514
PS125	116
PS130(Diode)	116
PS130(SCR)	5517
PS135(Diode)	116
PS135(SCR)	5517
PS140	116
PS150	116
PS160	116
PS210	5514
PS220	5514
PS230	5517
PS235	5517
PS310	5515
PS320	5515
PS330	5518
PS335	5518
PS405	116
PS410(Diode)	116
PS410(SCR)	5515
PS415	116
PS420(Diode)	116
PS420(SCR)	5515
PS425	116
PS430(Diode)	116
PS430(SCR)	5518
PS435(Diode)	116
PS435(SCR)	5518
PS440	116
PS450	116
PS460	116
PS510	5516
PS520	5516
PS530	5519
PS535	5519
PS603	116
PS604	116
PS605	116
PS609	116
PS610(Diode)	116
PS610(SCR)	5516
PS611	116
PS615	116
PS616	116
PS617	116
PS620	5516
PS621	116

To Be Replaced	ECG Replacement
PS622	116
PS623	116
PS627	116
PS628	116
PS629	116
PS630	5519
PS632	116
PS633	116
PS635	5519
PS636	116
PS637	116
PS700	177
PS720	177
PS-801	923D
PS1140	125
PS1176	5062A
PS1176A	5062A
PS1325	137A
PS1511	140A
PS1512	140A
PS1513	140A
PS1514	140A
PS1515	140A
PS1516	140A
PS1517	140A
PS2207	116
PS2208	116
PS2209	116
PS2247	116
PS2249	116
PS2346	156
PS2347	156
PS2411	116
PS2412	116
PS2413	116
PS2415	116
PS2416	125
PS2417	125
PS3534	5001A
PS3534A	5001A
PS4559	116
PS4560	116
PS4725	116
PS5300	116
PS5301	116
PS5302	116
PS6010-1	199
PS6325	150A
PS6465	5002A
PS6468	135A
PS8900	5065A
PS8901	5066A
PS8902	134A
PS8903	5067A
PS8904	5068A
PS8905	5069A
PS8906	5116A
PS8907	136A
PS8908	137A
PS8909	5071A
PS8910	138A
PS8911	5072A
PS8912	139A
PS8913	140A
PS8914	5074A
PS8915	142A
PS8916	143A
PS-8917	145A
PS8917	145A
PS8918	5075A
PS8919	5077A
PS10016B	5071A
PS10017B	138A
PS10018B	5072A
PS10019B	139A
PS10020B	140A
PS10021B	5074A
PS10022B	142A
PS10023B	143A
PS10024B	145A
PS10025B	5075A
PS10026B	5077A
PS10060	5071A
PS10061	138A
PS10062	5072A
PS10063	139A
PS10064	140A
PS10065	5074A
PS10066	142A
PS10067	143A
PS-10068	145A
PS10068	145A
PS10069	5075A
PS10070	5077A
PS11327	124
PS30802	519
PS209800	123A
PSS953	177
PSV111-08	611
PSV111-14	611
PSV111-16	611
PSV114-06	613
PSV114-14	613
PSV123-08	611
PSV123-14	611
PSV123-16	611
PSV126-06	613
PSV126-14	613
PT06	121
PT-029	186A
PT0-139	102A
PT0139	158
PT2A	160
PT2S	160
PT-3	116

To Be Replaced	ECG Replacement
PT3	116
PT3A	121
PT-3A	121
PT4	155
PT4-2268-01B	519
PT4-2268-011	519
PT4-2287-01	177
PT4-2311-011	519
PT4-7158	123A
PT4-7158-01A	123A
PT4-7158-02A	123A
PT4-7158-012	123A
PT4-7158-013	123A
PT4-7158-021	123A
PT4-7158-022	123A
PT4-7158-023	123A
PT5	116
PT-5B	116
PT5B	116
PT6	121
PT-6	121
PT6d22-1	166
PT12	121
PT-12	121
PT25	121
PT-25	121
PT30	121
PT32	131
PT40	121
PT-40	121
PT50	121
PT-50	121
PT150	104
PT-150	121
PT155	121
PT-155	121
PT176	121
PT-176	121
PT201	105
PT234	121
PT-234	121
PT235	121
PT-235	121
PT235A	104
PT-235A	121
PT236	104
PT-236	121
PT236A	104
PT-236A	121
PT236B	121
PT-236B	121
PT236C	121
PT242	121
PT-242	121
PT250	105
PT255	121
PT-255	121
PT256	121
PT-256	121
PT285	121
PT-285	121
PT285A	121
PT-285A	121
PT301	121
PT-301	121
PT301A	121
PT-301A	121
PT307	121
PT-307	121
PT307A	121
PT-307A	121
PT366B	121
PT501	121
PT-501	105
PT505	116
PT-510	116
PT510	116
PT515(RECT)	116
PT515(Semitron)	213
PT515(TRANSISTOR)	105
PT520	116
PT525	116
PT-530	116
PT530	116
PT530A	102A
PT-530A	100
PT540	116
PT-550	116
PT550	116
PT554	104
PT-554	121
PT555	121
PT-555	121
PT-560	116
PT560	116
PT580	125
PT600	186
PT601	186
PT612	128
PT627	123A
PT665	152
PT703	123A
PT705	790
PT720	123A
PT850	128
PT850A	128
PT851	123A
PT855	160
PT856	160
PT857	195A
PT886	123A
PT887	123A
PT888	128
PT896	128
PT897	123A

To Be Replaced	ECG Replacement
PT898	123A
PT1537	195A
PT1544	128
PT1545	128
PT1558	123A
PT1559	123A
PT1610	123A
PT1835	123A
PT1836	123A
PT1837	123A
PT1941	130
PT2040A	195A
PT2523	171
PT2524	171
PT2525	171
PT2525A	198
PT2540	192
PT2620	186
PT2635	152
PT2640	186
PT2660	186
PT2677C	195A
PT2760	123A
PT2896	123A
PT3141	123A
PT3141A	123A
PT3141B	123A
PT3141C	195A
PT3151A	123A
PT3151B	123A
PT3151C	123A
PT3500	123A
PT3501	123A
PT3502	128
PT3503	186
PT3570	278
PT3571A	278
PT3571B	278
PT4150A	362
PT4150B	363
PT4160C	364
PT4531	362
PT4532	464
PT4534	364
PT4579	278
PT-4620	316
PT4620	316
PT-4622	316
PT4622	316
PT4690	186
PT4800	123A
PT4816	107
PT4830	107
PT5693	152
PT5741	318
PT5742	317
PT6022/1	169
PT6618	186
PT6669	186
PT6696	186
PT6941	328
PT6942	328
PT6994	328
PT6995	328
PT6996	327
PT7903	328
PT7904	328
PT7905	328
PT7906	328
PT7907	328
PT7908	328
PT7909	327
PT7910	327
PT8769	350
PT8809	362
PT8810	363
PT8811	364
PT8837	350
PT8838	320
PT9732	357
PT9776	333
PT9776A	334
PT9784	333
PT9784A	334
PT9797	335
PT9797A	325
PT9803	333
PT31961	195A
PT40063	519
PT72130	116
PT-72130-1	5804
PTC101	128
PTC102	100
PTC103	159
PTC104	124
PTC105	121
PTC106	105
PTC107	160
PTC108	101
PTC109	102
PTC110	184
PTC111	185
PTC112	175
PTC113	218
PTC114	104
PTC115	123A
PTC116	181
PTC117	154
PTC118	162
PTC119	130
PTC120	131
PTC121	123A
PTC122	127
PTC123	194
PTC124	228

To Be Replaced	ECG Replacement
PTC125	194
PTC126	161
PTC127	194
PTC129	163A
PTC130	164
PTC131	159
PTC132	161
PTC151	132
PTC152	132
PTC153	172A
PTC173-RT	181
PTC201	5804
PTC202	116
PTC203	125
PTC204	125
PTC205	125
PTC206	109
PTC207	109
PTC208	118
PTC209	119
PTC210	502
PTC211	503
PTC212	505
PTC213	505
PTC214	135A
PTC215	135A
PTC401	168
PTC402	169
PTC404	120
PTC406	178MP
PTC407	178MP
PTC501	134A
PTC502	136A
PTC503	137A
PTC504	138A
PTC505	139A
PTC506	140A
PTC507	142A
PTC508	143A
PTC509	145A
PTC510	5077A
PTC511	144A
PTC512	147A
PTC513	5090A
PTC514	149A
PTC515	150A
PTC516	151A
PTC517	5086A
PTC518	5088A
PTC601	536
PTC602	501A
PTC603	500A
PTC604	358
PTC605	358
PTC606	358A
PTC701	708
PTC-703	709
PTC703	709
PTC705	790
PTC707	707
PTC708	705A
PTC709	718
PTC711	719
PTC713	720
PTC-715	714
PTC715	714
PTC717	721
PTC719	715
PTC721	722
PTC723	723
PTC726	712
PTC728	790
PTC729	743
PTC732	732
PTC733	791
PTC735	801
PTC736	736
PTC737	737
PTC740	740A
PTC741	738
PTC742	804
PTC754	1004
PTC780	1155
PTC2677C	195A
PTG132	161
PTO-6	121
PTO139	102A
PU6C22	116
PV-8	116
PV8	116
PXB-103	102A
PXB103	102
PXB-113	102A
PXB113	102
PXC-101	102A
PXC101	102
PXC101A	102
PXC-101AB	102A
PXC101AB	102
PY-5	116
PZ10A	5186A
PZ18A	5194A
PZ22A	5197A
PZT18	5194A
PZT22	5197A
PZT27	5200A
PZT33	5203A
pZW	5070A
Q-00169	132
Q-00169A	132
Q-00169B	132
Q-00169C	132
Q-00184R	132
Q-00269	123A
Q-00269A	123A

To Be Replaced	ECG Replacement
Q-00269B	123A
Q-00269C	123A
Q-00284R	229
Q-00284R-3	108
Q-00369	123A
Q-00369A	123A
Q-00369B	123A
Q-00369C	123A
Q-00384R	233
Q-00384R-3	108
Q-00469	199
Q-00469A	199
Q-00469B	199
Q-00469C	199
Q-00484R	123A
Q-00484R-1	108
Q-00569	123A
Q-00569A	123A
Q-00569B	123A
Q-00569C	199
Q-00584R	233
Q-00584R-3	108
Q-00669	123A
Q-00669A	123A
Q-00669B	123A
Q-00669C	123A
Q-00684R	123A
Q-00769	175
Q-00769A	175
Q-00769B	175
Q-00769C	175
Q-00784R	289
Q-00869	128
Q-00869A	128
Q-00869B	128
Q-00869C	195A
Q-00969	128
Q-00969A	128
Q-00969B	128
Q-00969C	195A
Q-00984R	159
Q-0115C	123A
Q-0172	128
Q-0-172	128
Q0415	159
Q0-419	159
Q-01069	195A
Q-01069A	195A
Q-01069B	195A
Q-01069C	237
Q-01084R	131
Q-01115C	107
Q-01169	128
Q-01169A	128
Q-01169B	128
Q-01169C	128
Q-01184R	195A
Q-01269	175
Q-01269B	175
Q-01269C	175
Q-01284R	195A
Q-01369C	1104
Q-01384R	237
Q-01484R	724
Q-02115C	123A
Q-03115C	123A
Q-04115C	123A
Q-05115C	123A
Q-06115C	123A
Q-07115C	123A
Q-08115C	199
Q-09115C	199
Q0V60526	102A
Q0V60527	103A
Q0V60528	102A
Q0V60529	123A
Q0V60530	123A
Q0V60537	103A
Q0V60538	123A
Q1	102A
Q-1	102
Q1-7C	102A
Q1/6515	107
Q-1A	100
Q1B	116
Q1H	116
Q-2	101
Q2-7C	102A
Q2/6515	107
Q2N406	102A
Q2N1526	126
Q2N2428	102A
Q2N2613	102A
Q2N4105	103A
Q2N4106	158
Q2N4107	103A&158(CP)
Q2Z-10A	140A
Q-3	101
Q3/2	116
Q3/6515	123A
Q4	102A
Q-4	102
Q4/6515	107
Q4B	116
Q-5	101
Q6	158
Q-6	102A
Q6/2	116
Q6/6515	107
Q7	158
Q-7	102A
Q7/6515	102A
Q8	158
Q-8	102A
Q8/2	116

To Be Replaced	ECG Replacement
Q8/6515	102A
Q-9	101
Q9/6515	126
Q11/6515	102A
Q12/6515	102A
Q16	158
Q-16	102A
Q32	116
Q-35	123A
Q-36	159
Q-36A	159
Q49	109
Q50	109
Q51	109
Q52	116
Q53	116
Q54	116
Q55	116
Q56	116
Q57	116
Q58	116
Q59	116
Q60	116
Q62	116
Q82	116
Q150A(PRIDE)	317
Q205(Dynaco)	722
Q301	107
Q514Z	165
Q2001M	5641
Q2001M3	5651
Q2001MS2	5642
Q2001P	5641
Q2006H	5673
Q2008H	5673
Q2010H	5673
Q2015H	5673
Q2015L5	56004
Q2015R5	56004
Q2025H	5693
Q4001M	5642
Q4001M3	5652
Q4006H	5675
Q4008H	5675
Q4010H	5675
Q4015H	5675
Q4015L5	56006
Q4015R5	56006
Q4025H	5695
Q5006H	5676
Q5008H	5676
Q5010H	5676
Q5015L5	56008
Q5015R5	56008
Q5025H	5697
Q5030	127
Q5039	103A
Q5044	160
Q5050	103A
Q5053	123A
Q5053D	199
Q5053E	199
Q5053F	199
Q5053G	199
Q5053NP	199
Q5053Y	199
Q5075CLY	124
Q5075DLY	124
Q5075DXY	124
Q5075ELY	124
Q5075EXY	124
Q5075FXY	124
Q5075ZMY	124
Q5078Z	199
Q5083C	162
Q5087Z	159
Q5100A	129
Q5102	234
Q5102P	234
Q5102Q	234
Q5102R	234
Q5102S	234
Q5102Y	234
Q5104Z	124
Q5111	238
Q5111K	238
Q5111ZK	238
Q5113ZLM	124
Q5113ZMM	124
Q5113ZMY	124
Q5116C	290
Q5116CA	290
Q5119	162
Q5119D	162
Q5119E	162
Q5119F	162
Q5120	162
Q5120P	162
Q5120Q	162
Q5120R	162
Q5121	199
Q5121O	199
Q5121Q	199
Q5121R	199
Q5123E	123A
Q5123F	123A
Q5124	297
Q5134Z	175
Q5135	159
Q5135-0	159
Q5135-0Y	159
Q5135QY	159
Q5135-Y	159
Q5136F	198

To Be Replaced	ECG Replacement
Q5137BA	291
Q5137CA	291
Q5138	198
Q5138K	198
Q5138L	198
Q5138M	198
Q5140	165
Q5140Q	165
Q5140R	165
Q5140XP	165
Q5140Z	165
Q5140ZX-0	165
Q5140ZXP	165
Q5140ZXQ	165
Q5140ZXR	165
Q5153	199
Q5160	198
Q5160-0	198
Q5160Q	198
Q5160R	198
Q5160Y	198
Q5161Z	238
Q5163	375
Q5163D	375
Q5163E	375
Q5163F	375
Q5175	198
Q5175C	198
Q5175D	198
Q5175E	198
Q5175TM	198
Q5175ZXV	198
Q5175ZXY	198
Q5176D	198
Q5178	198
Q5180	199
Q5183	199
Q5183P	199
Q5183Q	199
Q5183R	199
Q5199	162
Q5202	198
Q5205	290
Q5206	162
Q5207	238
Q5207Z	238
Q5209	294
Q5210	199
Q6006H	5677
Q6008H	5677
Q6010H	5677
Q6015L5	56008
Q6015R5	56008
Q6025H	5697
Q6521	288
Q6522	288
Q8015L5	56010
Q8015R5	56010
Q-10115C	123A
Q-10484R	724
Q-11115C	152
Q-12115C	152
Q-13115C	199
Q-14115C	123A
Q-15115C	123A
Q-16115C	123A
Q-17115C	299
Q-18115C	282
Q-20115C	116
Q-21115C	177
Q-22115C	109
Q-23115C	519
Q-24115C	177
Q-25115C	139A
Q-26115C	116
Q34450	124
Q35218	102A
Q35242	123A
Q35259	161
Q40263	102A
Q40359	160
Q50787	233
Q50787Z	233
Q51020	234
Q51210	199
Q51327	165
Q51350Y	159
Q200415	121
Q310347	107
Q321323	229
Q330916	199
Q331025	186A
Q331034	186A
Q331614	229
Q331629	235
Q610513	222
Q-RF-2	123A
Q-SE1001	123A
QA01-07RE	5071A
QA01-08R	5072A
QA01-082	5072A
QA01-11SE	5074A
QA01-25RA	5081A
QA01-115E	5074A
QA-1	160
QA1-11M	5074A
QA-8	128
QA8	128
QA-9	129
QA-10	128
QA-11	129
QA11	124
QA-12	123A
QA-13	123A
QA-14	123A

To Be Replaced	ECG Replacement
QA-15	123A
QA-16	123A
QA-17	129
QA-18	133
QA-19	123A
QA-20	133
QA-21	159
QA-21A	159
QA91	109
QA111M	5074A
QA111SE	5074A
QA703E	703A
QB01-15ZB	145A
QB01-18	5077A
QB111Z	5074A
QB400428	9914
QC-1	358
QD-331885XT	116
QD-AM205XE	135A
QD-ARD9ECAA	139A
QD-C0710XBE	123A
QD-CS2688DJ	614
QD-CTT310XQ	614
QD-CTT410KQ	612
QD-CTT410XQ	612
QD-G1N60PXT	109
QD-G1N60XXT	109
QD-G1S32XXT	109
QD-G1S188XZ	109
QD-S1S953XA	156
QD-SGP25GAG	116
QD-SGP25GXG	116
QD-SMA150XN	177
QD-SN4448XZ	519
QD-SN5401Z	156
QD-SS1B85XT	116
QD-SS155XT	177
QD-SS188XT	116
QD-SS1555XT	177
QD-SS1885XT	116
QD-SS1885XY	116
QD-SSA3AMBE	156
QD-SSR1KX4P	116
QD-SSR3AMBE	156
QD-SSS53XXA	177
QD-SV06CSSB	116
QD-SV06CXX6	116
QD-SV06CXXB	116
QD-SVD6CSSB	116
QD-SVO6CXXB	506
QD-ZBZ162XJ	5075A
QD-ZMZ05XE	135A
QD-ZMZ205KE	135A
QD-ZMZ205XE	135A
QD-ZMZ305KE	135A
QD-ZMZ306CE	5070A
QD-ZMZ310XE	614
QD-ZMZ408CE	5072A
QD-ZMZ409BE	139A
QD-ZRD9EXA	139A
QD-ZRD9EXAA	139A
QD-ZRD56EAA	136A
QD-ZRD56FAA	136A
QD-ZUZ9BXXP	139A
QDCTT310XQ	614
QDCTT410XQ	612
QDG1S32XXT	109
QDSGP25GAG	156
QDSGP25GXG	156
QDSS1555X7	177
QDSSR3AMBE	125
QDZMZ205XE	135A
QDZMZ310XE	5096A
QF19GR	312
QF68AM	312
QF1033	312
QF4509	222
QFK45B	222
QFK55D	312
QFK4509	222
QG0076	102A
QG0254	123A
QKT0033XBE	312
QN2613	102
QN-BD1126A	601
QOV60526	102A
QOV60527	103A
QOV60528	102A
QOV60529	123A
QOV60530	123A
QOV60537	103A
QOV60538	102A
QP001200A	130
QP-1	179
QP-1	179
QP1	121
QP-1A	179
QP1A	121
QP-2	179
QP2	121
QP-2	121
QP-3	179
QP-4	179
QP-5	179
QP-6	179
QP6	121
QP-7	179
QP7	121
QP-8	130
QP8	130
QP8-6623N	105
QP8-6623N	105
QP-8-P	223
QP-10	179
QP-11	130

To Be Replaced	ECG Replacement
QP-12	130
QP-13	185
QP-14	184
QP-31	197
QQ-0PLL02AN	1167
QQ-0PLL02AQ	1167
QQ-0PPL02AO	1167
QQ-DPLL02AN	1167
QQ-M00566AA	1052
QQ-M07205AT	1155
QQ-MAN612AN	1249
QQ-MB521AX	1166
QQ-MB7521AX	1166
QQ-MBA511AX	1165
QQ-MBA511AY	1165
QQ-MBA511BX	1165
QQ-MBA521AX	1166
QQ-MC3001AN	1192
QQ-MC3001AT	1192
QQ-MC3001DT	192
QQ-MD7205AI	1155
QQ-MM566AA	1052
QQ-OPLL02A0	1167
QQ-OPLL02AN	1167
QQ-OPLL02AO	1167
QQ-OPPL02AO	1167
QQC61209	158
QQC61210	102A
QQC61689	159
QQC61689A	159
QQM07205AT	1155
QQMAN612AN	1249
QQOPLL02AN	1167
QQV60526	158
QQV60527	103A
QQV60528	102A
QQV60529	128
QQV60537	103A
QQV60538	158
QQV60539	102A
QQV61772	103A
QR2378	102A
QRF-2	128
QRF3	132
QRF-3	132
QRG-3	132
QRT105	199
QRT106	234
QS054	123A
QS316	159
QS815	123A
QS1018	299
QS1061	152
QS1096	186A
QS1226	186A
QS1306	235
QS1307	236
QS1359	229
QS1419	152
QS1449	192
QS1675	229
QS1730	316
QS1816	236
QS1908	229
QS1973	315
QS2034	282
QS2076	123AP
QS2091	295
QS2092	235
QSC372	123A
QSC380	123A
QSC381	107
QSC458	289
QSC460	233
QSC509	297
QSC620	123A
QSC710	123AP
QSC756	282
QSC784	229
QSC815	123A
QSC829	123A
QSC839	123A
QSC945	199
QSC1018	299
QSD261	192
QSD327	123A
QSD471	293
QSE1001	123A
QSE3001	108
QSE5020	161
QSI-5022	813
QT-1306X7ZA	235
QT1312XAE	199
QT-1318XDN	297
QT-1846XAN	295
QT-1969XAE	236
QT-A073XAA	294
QT-A0564XHN	234
QT-A0683XBN	294
QT-A0719XAN	290
QT-A0719XCN	290
QT-A0719XHN	290
QT-A0733XON	294
QT-A0733XAA	294
QT-A0733XBA	294
QT-A0733XDA	294
QT-A0733XDN	294
QT-C047XAN	229
QT-C070KAE	123AP
QT-C095AAA	199
QT-C0372XAT	123A
QT-C0372XAY	123A
QT-C0372XDN	123A
QT-C0460CBB	233
QT-C0460XBB	233

To Be Replaced	ECG Replacement
QT-C0710XAE	123AP
QT-C0710XBE	123AP
QT-C0710XEE	123AP
QT-C0710XXE	123AP
QT-C0716XAE	123A
QT-C0735XBT	289
QT-C0763XAE	229
QT-C0763XDA	229
QT-C0784XBT	229
QT-C0784XET	229
QT-C0828XAN	199
QT-C0828XDN	199
QT-C0829X0N	123A
QT-C0829XAN	123A
QT-C0829XBN	123A
QT-C0829XDN	199
QT-C0829XEN	123A
QT-C0839XBA	123A
QT-C0839XBE	123A
QT-C0839XCA	123A
QT-C0839XDA	123A
QT-C0900XBA	199
QT-C0900XBD	199
QT-C0900XCA	199
QT-C0900XDA	199
QT-C0900XEA	199
QT-C0900XED	199
QT-C0945AA	199
QT-C0945AAA	199
QT-C0945ABA	199
QT-C0945ACA	199
QT-C0945ADA	199
QT-C0945AEA	199
QT-C0945AGA	199
QT-C0945LAA	199
QT-C1B06XZA	235
QT-C131BXDN	128
QT-C1047SAN	229
QT-C1047XAN	229
QT-C1047XBN	229
QT-C1226XDN	186A
QT-C1306XZA	235
QT-C1306XZH	235
QT-C1307XZA	236
QT-C1318DN	297
QT-C1318XAN	297
QT-C1318XDN	297
QT-C1318XON	297
QT-C1327XAN	199
QT-C1359XAN	229
QT-C1359XBE	229
QT-C1359XBN	229
QT-C1383XDN	293
QT-C1687XAN	123A
QT-C1760XAS	306
QT-C1760XCS	306
QT-C1846XAN	295
QT-C1847XAN	295
QT-C1864XAN	295
QT-C1969XAE	236
QT-C1974XAN	235
QT-C2074XAT	322
QT-C2166XAE	235
QT-CBC546AA	199
QT-C0372XAT	123A
QT-C0710XBE	123AP
QT-C0828XDN	199
QT-C0829XBN	123A
QT-C0900XCA	199
QT-C0945ACA	199
QT-D0034XAE	132
QT-D0313XAC	196
QT-D0313XAG	196
QT-D0325XAC	152
QT-D0525XDC	152
QT-D0525XDT	196
QT-K0023AAA	312
QT-K0023AAS	132
QT-K0033XAE	312
QT-K0033XBE	312
QT-K0034XAE	312
QT-K0034XBE	132
QT-X0033XBE	312
QTA0638XBN	294
QTA495	159
QTA562	159
QTA564	234
QTA673	290
QTA719	290
QTA733	294
QTA844	129
QTB471	121
QTC0945ABA	199
QTC0945LAN	199
QTC1096XAA	186A
QTC1318XDN	293
QTC1678AN	123A
QTC1969XBE	236
QTC2166XAE	235
QTD0704XAE	377
QTK003XAE	132
QTK0033XBE	312
QTZ0719XAN	290
QV-BD11225A	601
QV-BD11246A	601
QVD1KF114	109
QVDM8513ART	601
QVM800B	604
QZ3.6T5	134A
QZ3.6T10	134A
QZ5.1T5	135A
QZ5.1T10	135A
QZ5.6T5	136A
QZ5.6T10	136A
QZ6.2T5	137A

To Be Replaced	ECG Replacement
QZ6.2T10	137A
QZ10T5	140A
QZ10T10	140A
QZ12T5	142A
QZ12T10	142A
QZ14T5	144A
QZ14T10	144A
QZ15T5	145A
QZ-15T5	145A
QZ15T10	145A
QZ-15T10	145A
QZ27T5	146A
QZ27T5A	146A
QZ27T10	146A
QZ27T10A	146A
QZ1575	145A
R008A	156
R0050(HEP)	125
R0051(HEP)	125
R0052(HEP)	125
R0053(HEP)	125
R0054(HEP)	125
R0055(HEP)	125
R0056(HEP)	125
R0070(HEP)	5801
R0071(HEP)	5802
R0072(HEP)	5804
R0074(HEP)	5808
R0076(HEP)	5808
R0078(HEP)	5809
R0080	156
R0081	156
R0082	156
R0086	156
R0090	156
R0091	156
R0092	131
R0094	156
R0096	156
R0097	156
R0098	156
R06-1001	108
R06-1002	108
R06-1003	108
R06-1004	108
R06-1005	108
R06-1006	108
R06-1007	102A
R06-1008	102A
R06-1009	102A
R06-1010	102A
R07A	5071A
R080	125
R0130	5882
R0131	5882
R0132	5882
R0134	5882
R0136	5882
R0160	5994
R0161	5994
R0162	5994
R0164	5994
R0166(HEP)	5952
R0250	5994
R0251	5994
R0253	5994
R0254	5994
R0255	5994
R0256	5994
R0257	5994
R0600(HEP)	156
R0602(HEP)	156
R0604(HEP)	156
R0606	506
R0700(HEP)	112
R0801(HEP)	166
R0803(HEP)	167
R0804(HEP)	168
R0805(HEP)	169
R0851(HEP)	166
R0852(HEP)	166
R0853(HEP)	167
R0855(HEP)	168
R0856(HEP)	169
R07105	141A
R-1	116
R-1A	116
R1A(HV Rect)	502
R1B	116
R-1B	5802
R1K	116
R1N1102	722
R-1S188	109
R-1S333Y	5072A
R2	119
R-2-02	116
R-2A	5944
R-2B	5944
R2D	142A
R2E	145A
R-2SA222	160
R-2SB186	102A
R-2SB187	102A
R-2SB303	102A
R-2SB405	158
R-2SB474	226MP
R-2SB492	176
R2SB492	102
R-2SC535	107
R-2SC537	123A
R-2SC545	108
R-2SC668	108
R-2SC772	107
R-2SC858	107
R-2SD187	103A

To Be Replaced	ECG Replacement
R3	120
R-3	120
R3/2H	116
R-3A	5944
R4A	116
R-4A	5804
R4HZ	5990
R5	125
R-5	5808
R5B	125
R-5B	5802
R5C	125
R-5C	5802
R6	125
R6-0A	176
R6/2H	116
R-6A	5944
R-6B	5944
R6HZ	5994
R8	125
R8/2H	125
R9A	116
R10D1	116
R10DC	116
R12	101
R-12C	513
R14	101
R15	124
R16	102A
R-16	102A
R23-1003	102A
R-23-1003	102A
R23-1004	102A
R-23-1004	102A
R24-1001	102A
R-24-1001	102A
R24-1002	102A
R-24-1002	102A
R24-1003	102A
R24-1004	102A
R33	103A
R-33	101
R34	103A
R-34	101
R34-6016-58	123A
R35	102A
R36	176
R-36M	500A
R41	101
R43HZ	5990
R46	102
R-48M	536
R52	102A
R56	102A
R-56	158
R60-1001	126
R60-1002	160
R60-1003	160
R60-1004	102A
R60-1005	102A
R60-1006	102A
R60-1007	109
R61	103A
R62	103A
R-62	101
R63	103A
R-63	101
R-63HZ	5994
R64	102A
R-64	102A
R65	102A
R66	102A
R-66	102A
R66-8504	116
R67	102A
R-67	102A
R79	103A
R80	103A
R83	102A
R-83	102A
R87	102A
R98	102A
R100-1	102A
R100-8	102A
R100-9	102A
R101-2	102A
R101-3	102A
R101-4	102A
R102-41	121
R104-5	126
R104-6	126
R104-7	126
R104-8	126
R117	101
R118	107
R119	100
R-119	100
R120	102A
R-120	102A
R122C	116
R123	128
R123-2	128
R123-3	128
R123-4	128
R123-5	128
R125	101
R-125	101
R135	101
R-135	101
R135-1	130
R136	101
R-136	101
R137	101
R-137	101
R145B	169

To Be Replaced	ECG Replacement
R152	102A
R-152	102A
R154B	166
R-154B	116
R163	100
R-163	100
R164	102A
R-164	102A
R177	103A
R186	100
R-186	100
R202	101
R-202	101
R203	101
R-203	101
R204B	166
R210	156
R227	100
R-227	100
R242	102A
R-242	102A
R244	100
R-244	100
R245	102A
R-245	102A
R250	156
R250F	156
R255	102A
R258	100
R264-1	197
R265A	121
R289	102A
R290	102A
R291	102A
R-291	102A
R324	102A
R336	126
R337	126
R338	160
R339	160
R340	123A
R341	160
R350	156
R350F	156
R364	102A
R424	160
R-424	100
R424-1	160
R425	160
R-425	100
R428	102A
R488	100
R-488	100
R497	160
R506	100
R-506	100
R515	160
R515A	160
R516	121
R516A	160
R516(T.I.)	160
R530	102A
R-530	102A
R537	102A
R539	160
R-539	126
R558	160
R558(T.I.)	102A
R563	160
R563(T.I.)	102A
R564	160
R565	160
R579	160
R579(T.I.)	102A
R581	126
R582	123A
R592	101
R593	160
R-593	102A
R593A	160
R608	102A
R608A	102A
R-608A	102A
R612-1	152
R621-1	152
R623-1	196
R632-1	152
R632-2	152
R640-1	196
R684	126
R714	126
R715	126
R855-2	116
R868	102A
R1000	156
R1001(HEP)	5400
R1002(HEP)	5401
R1003(HEP)	5402
R1004(HEP)	5403
R1005(HEP)	5404
R1035	116
R1106	109
R1107	109
R1109	109
R1117-1	124
R1202(HEP)	5515
R1205(HEP)	5515
R1218(HEP)	5414
R1220	5442
R1221	5444
R1222	5446
R1223	5448
R1241	5529
R1242	5529
R1243	5529

To Be Replaced	ECG Replacement
R1243(Motorola)	5483
R1244	5529
R1245	5529
R1246	5529
R1247	5529
R1273	102A
R1274	102A
R1300	5529
R1301	5529
R1302	5529
R1303	5529
R1304(HEP)	5504
R1305	5981
R1306	5529
R1307	5529
R1329	116
R-1348	142A
R1471	5547
R1472(HEP)	5542
R1473	5547
R1475	5547
R1530	103A
R1531	103A
R1532	103A
R1533	101
R-1533	101
R1534	103A
R1537	103A
R1538	103A
R1539	160
R1540	102A
R1541	102A
R1542	102A
R1543	102A
R1544	102A
R1545	103A
R1546	102A
R1547	103A
R1548	102A
R1549	103A
R1550	160
R1553	103A
R1554	160
R1555	102A
R1667	109
R1711	5601
R1712	5602
R1713	5603
R1715	5605
R1721(HEP)	5622
R1722(HEP)	5623
R1723(HEP)	5624
R1725(HEP)	5626
R1750	5675
R1751	5675
R1752	5675
R1781	5685
R1782	5685
R1783	5685
R1785	5685
R1889	109
R2001	127
R-2001	127
R2002(HEP)	6407
R2003	127
R2005	5893
R2010	5895
R2015	5897
R2020	5897
R2021(HEP)	6404
R2025	5899
R2030	5899
R2035	5901
R2040	5901
R2045	5903
R2050	5903
R2060	5905
R2070	5909
R2080	5909
R2090	5911
R2096	175
R2105	5913
R2110	5915
R2115	5917
R2120	5917
R2125	5919
R2130	5909
R2135	5921
R2140	5921
R2145	5923
R2150	5923
R2159	116
R2160	5925
R2164	109
R2170	5929
R2180	5929
R2190	5933
R2252	116
R2270-60106	128
R2270-75116	181
R2270-75497	130
R2270-76963	129
R2270-77873D	128
R2270-78399	130
R2334	109
R2350	102A
R2351	102A
R2352	102A
R2353	102A
R2355	102A
R2356	103A
R2359	103A
R2360	103A
R2364	103A
R2365	103A

To Be Replaced	ECG Replacement
R2366	102A
R2367	102A
R2373	102A
R2374	103A
R2375	103A
R2432-1	710
R2434-1	706
R2442	116
R2444	124
R2445-1(RCA)	711
R2446	121
R2446-1	121
R2460-1	117
R2460-3	516
R-2460-3	516
R2460-4	117
R2460-9	127
R2460-9(RCA)	516
R2473	108
R2474-2	154
R2476	108
R2477	108
R2482-1	102A
R2494-1	127
R2500-1	127
R2500(HEP)	610
R2501(HEP)	611
R2503(HEP)	614
R2516-1	712
R2516-1(RCA)	712
R2559-1	728
R2560-1	729
R2675	102A
R2677	102A
R2683	160
R2684	160
R2685	160
R2686	160
R2687	160
R2688	160
R2689	102A
R2694	160
R2695	160
R2696	160
R2697	160
R2749	102A
R2749M	102A
R2964	127
R2982	130
R3012	525
R3057	113
R3110	5983
R3115	5987
R3120	5987
R3125	5989
R3130	5989
R3135	5991
R3140	5991
R3145	5993
R3150	5993
R3160	5995
R3170	5999
R3180	5999
R3190	6003
R3201(HEP)	522
R3203(HEP)	500A
R3205	5981
R3210	5983
R3215	5987
R3220	5987
R3225	5989
R3230	5989
R3235	5991
R3240	5991
R3245	5993
R3250	5993
R3260	5995
R3270	5999
R3273-P1	123A
R3273-P2	123A
R3275	102A
R3276	102A
R3277	160
R3278	160
R3279	160
R3280	5999
R3280(RCA)	102A
R3282	102A
R3283	123A
R3284	102A
R3285	116
R3286	102A
R3287	160
R3288	160
R3290	6003
R3293	103A
R3293(GE)	123A
R3299	102A
R3301	102A
R3309	160
R3314	113
R3405	6021
R3410	6023
R3410-P1	519
R3415	6027
R3420	6027
R3425	6031
R3430	6031
R3435	6035
R3440	6035
R3445	6039

To Be Replaced	ECG Replacement
R3450	6039
R3460	6041
R3470	6043
R3480	6043
R3490	6045
R3502	704
R3502-1	704
R3502-2	704
R3502(RCA)	704
R3503	124
R3508	128
R3512-1	121
R3514-1	127
R3515	104
R3515(RCA)	121
R3520-1	124
R3528-1	785
R3528-1(RCA)	785
R-3530-1	108
R3533	113
R-3552-1	128
R-3553-1	128
R-3555	128
R3555-3	128
R3573-1	103A
R3576-1	233
R3578-1	102A
R-3580-1	128
R3583-7	230
R3583-8	230
R3585-5	230
R3585-6	231
R3585-7	230
R3585-8	231
R3593	128
R3598-2	102A
R3605	6051
R3608	128
R3608-1	128
R3608-2	128
R3610	6051
R3611-1	152
R3613-3(RCA)	191
R3615	6055
R3619-3	5641
R3620	6055
R3625	6059
R3630	6059
R3635	6061
R3640	6061
R3645	6065
R3647	124
R3650	6065
R3651-1	222
R3660	6065
R3670	6069
R3676-1	233
R3677-1	780
R3677-1(RCA)	780
R3677-2	780
R3677-2(RCA)	780
R3677-3	780
R3677-3(RCA)	780
R3679	128
R3680	6069
R3681-1	152
R3690	6073
R4057	123A
R4192	124
R4193	124
R4194	124
R4195	124
R4196	124
R4295-1	756
R4295-1(RCA)	756
R4295-2	756
R4295-2(RCA)	762
R4348	102A
R4349	102A
R4369	130
R4409	113
R4437-1	787
R4437-1(RCA)	787
R4437-2	787
R4437-2(RCA)	787
R4438-1	788
R4438-1(RCA)	788
R4438-2	788
R4438-2(RCA)	788
R4439-1	789
R4439-1(RCA)	789
R4439-2	789
R4439-2(RCA)	789
R4666	113
R5048	128
R5050	103A
R5051	102A
R5052	102A
R5053	102A
R5054	103A
R5055	102A
R5056	103A
R5096	109
R5097	102A
R5098	102A
R5099	102A
R5100	102A
R5101	158
R5102	160
R5103	160
R5158-1	797
R5179	103A
R5180	103A
R5181	102A
R5182	158

To Be Replaced	ECG Replacement
R5522	109
R5523	102A
R5524	102A
R5525	102A
R5708	102A
R5862	110MP
R5970	116
R5971	116
R6048	116
R6109	110MP
R6110	116
R6171-11	515
R6171-12	515
R6171-19	515
R6171-20	515
R6422	116
R6553	102A
R6922	102A
R-7026	177
R-7027	177
R7028	109
R7029	109
R7030	138A
R7048	102A
R-7051	109
R-7092	177
R-7093	137A
R-7094	138A
R-7096	117
R-7097	5019A
R-7103	142A
R-7105	141A
R7124	102A
R7127	102A
R7162	116
R7163	123A
R7164	102A
R7165	123A
R7166	102A
R7167	104
R7248	116
R7249	123A
R7253	121
R7271	116
R7343	123A
R7359	123A
R7360	123A
R7361	123A
R7362	103A
R7363	102A
R7489	102A
R7490	102A
R7491	102A
R7582	123A
R7612	102A
R7613	128
R7615	156
R7620	104
R7682	116
R7743	109
R7885	160
R7886	160
R7887	123A
R7888	102A
R7889	102A
R7890	105
R7891	160
R7892	109
R7893	109
R7894	142A
R7953	123A
R7954	116
R7962	160
R8022	177
R8023	177
R8024	116
R8060	109
R8061	109
R8066	123A
R8067	123A
R8068	123A
R8069	123A
R8070	123A
R8115	123A
R8116	123A
R8117	123A
R8118	123A
R8119	123A
R8120	123A
R8121	102A
R8158	124
R8219	109
R8223	123A
R8224	123A
R8225	123A
R8240	160
R8241	160
R8242	160
R8243	123A
R8244	123A
R8257	109
R8259	123A
R8260	123A
R8261	123A
R8305	123A
R8310	102A
R8311	102A
R8312	123A
R8313	104
R8364	142A
R8470	116
R8471	118
R8472	119
R8473	116
R8474	113

To Be Replaced	ECG Replacement
R8475	109
R8477	120
R8528	123A
R8529	107
R8530	123A
R8543	123A
R8551	123A
R8552	123A
R8553	123A
R8554	123A
R8555	123A
R8556	123A
R8557	123A
R8559	160
R8560	120
R8620	123A
R8645	156
R8646	123A
R8647	123A
R8648	123A
R8649	128(2)
R8658	123A
R8659	121
R8685	160
R8686	160
R8687	102A
R8688	102A
R8692	160
R8693	160
R8694	160
R8695	102A
R8697	102A
R8703	160
R8704	160
R8705	160
R8706	102A
R8707	102A
R8721	117
R8881	160
R8882	160
R8883	102A
R8884	102A
R8885	102A
R8886	102A
R8887	109
R8889	123A
R8900	123A(2)
R8914	123A
R8915	128
R8916	123A
R8963	123A
R8964	123A
R8965	123A
R8966	123A
R8967	159
R8967A	159
R8968	123A
R8969	159
R8969A	159
R8970	109
R8971	102A
R8989	124
R9001(HEP)	178MP
R9002(HEP)	178MP
R9003(HEP)	178MP
R9004	123A
R9005	123A
R9006	123A
R9025	123A
R9071	123A
R9134(HEP)	109
R9135(HEP)	109
R9381	5079A
R9382	171
R9383	171
R9384	123A
R9385	123A
R9470	116
R9483	123A
R9531	160
R9532	160
R9533	158
R9534	158
R9590	109
R9597	116
R9600	229
R9601	160
R9602	160
R9603	158
R9604	158
R10254P936	9936
R10254P945	9945
R10254P945B	9945
R10254P946	9946
R10255P946B	9946
R10256P962	9962
R10256P962B	9962
R15003	128
R15003P1	128
R20100	5911
R21100	5933
R22707-8399	130
R24451	711
R25161	712
R31100	6003
R32100	6003
R34100	6045
R36100	6073
R62194	108
R105064	118
R105330	358
R106379	116
R-106379	116
R109328	113
R109474	113

To Be Replaced	ECG Replacement
R113321	116
R-113321	116
R113392	116
R-113392	116
R600428R	6355
R4100070	6050
R4100170	6050
R4100822	5998
R4100840	5998
R4100860	6042
R4101022	6002
R4101040	6002
R4101060	6044
R4101070	6072
R4101822	5999
R4108070	6068
R4110070	6051
R4110170	6051
R4110840	5999
R4110860	6043
R4111022	6003
R4111040	6003
R4111060	6045
R4111070	6073
R4118070	6069
R6000124	6354
R6000124R	6355
R6000128	6354
R6000128R	6355
R6000224	6354
R6000224R	6355
R6000228	6354
R6000228R	6355
R6000324	6354
R6000324R	6355
R6000328	6354
R6000328R	6355
R6000424	6354
R6000424R	6355
R6000428	6354
R6000524	6356
R6000524R	6357
R6000528	6356
R6000528R	6357
R6000624	6356
R6000624R	6357
R6000628	6356
R6000628R	6357
R6000724	6358
R6000724R	6359
R6000728	6358
R6000728R	6359
R6000824	6358
R6000824R	6359
R6000828	6358
R6000828R	6359
R6000924	6358
R6000924R	6359
R6000928	6358
R6000928R	6359
R6001024	6358
R6001024R	6359
R6001028	6358
R6001028R	6359
R227075497	130
R227077499	130
R227077873D	128
R227078533	223
R-S1264	116
R-S1347	116
R-S-1720	116
R-S1805	5804
RA1	506
RA-1	116
RA-1A	116
RA1B	116
RA-1B	125
RA-1C	125
RA-1D	506
RA-1E	506
RA-1F	525
RA1Y	116
RA1Z	116
RA-1Z	506
RA-1ZC	116
RA1ZC	116
RA-2	140A
RA2	125
RA2C	125
RA-2C	125
RA-2(Damper)	506
RA-2(RECT)	5070A
RA-2(Zener)	140A
RA132AA	156
RA132BA	116
RA132DA	156
RA132MA	156
RA132PA	156
RA132RA	156
RA132VA	156
RA-Z	506
RB050	5304
RB6-PS-801	923D
RB100	5304
RB200	5304
RB400	5304
RB600	5305
RB800	5306
RB1000	5307
RC080	125
RC-2	506
RC2	525
RC-2	525
RC-2V	525
RC5.1EB	5010A

To Be Replaced	ECG Replacement
RC709DC	909D
RC709DP	909D
RC709T	909
RC710DC	910D
RC710DP	910D
RC710T	910
RC711DC	911D
RC711DP	911D
RC711T	911
RC723D	923D
RC723DP	923D
RC723T	923
RC741DN	941M
RC741DP	941M
RC741T	941
RC747DB	947D
RC747DC	947D
RC747DP	947D
RC748ND	975
RC748T	1171
RC1458DN	778
RC1458ND	778
RC1700	130
RC-1700	130
RC2270	128
RC3301	992
RC3301DB	992
RC4739DB	725
RC7805	960
RC7806	962
RC7812	966
RC7815	968
RC7824	972
RCA1A01	128
RCA1A02	129
RCA1A03	282
RCA1A05	129
RCA1A06	128
RCA1A07	128
RCA1A08	129
RCA1A09	128
RCA1A15	128
RCA1A16	129
RCA1A17	128
RCA1A18	128
RCA1A19	129
RCA1B01	284
RCA1B04	283
RCA1B05	283
RCA1B06	280
RCA1B09	283
RCA1C05	196
RCA1C06	197
RCA1C10	196
RCA1C11	197
RCA1C14	196
RCA29	152
RCA29A	152
RCA29A/SDH	152
RCA29B	291
RCA29BSDH	291
RCA29C	291
RCA29CSDH	291
RCA29/SDH	152
RCA30	153
RCA30A	153
RCA30B	292
RCA30C	292
RCA106A	5454
RCA106B	5455
RCA106C	5456
RCA106D	5457
RCA106F	5453
RCA106Q	5452
RCA106Y	5452
RCA107A	5454
RCA107B	5455
RCA107C	5456
RCA107D	5457
RCA107F	5453
RCA107Q	5452
RCA107Y	5452
RCA120	261
RCA121	261
RCA125	262
RCA126	262
RCA1000	243
RCA1001	243
RCA3517	102A
RCA3858	102A
RCA8203	262
RCA8203A	264
RCA8203B	264
RCA8350	246
RCA8350A	246
RCA8350B	246
RCA34098	126
RCA34099	126
RCA34100	126
RCA34101	102A
RCA34106	102A
RCA35953	102A
RCA35954	102A
RCA40231	103A
RCA40245	161
RCA40246	161
RCA40250	152
RCA40395	102A
RCA40396N	103A
RCA40396P	102A
RCA44098	126
RCC7022	120
RCC-7022	116
RCC7225	116(4)
RCP111A	171

To Be Replaced	ECG Replacement
RCP111B	171
RCP111C	171
RCP111D	171
RCP113A	171
RCP113B	171
RCP113C	171
RCP113D	171
RCP115	171
RCP115A	171
RCP115B	171
RCP117	171
RCP117B	171
RCS242	130
RCS880	397
RCS881	397
RCS882	397
RD082	5072A
RD-082	5072A
RD082	5072A
RD2	142A
RD-2.2E	5072A
RD2.7EB	5063A
RD2.7FB	5063A
RD-3	116
RD3.0EB	5065A
RD3.3EB	5066A
RD3.3FB	5066A
RD3.6EB	134A
RD3.6FF	134A
RD3.9EB	5067A
RD3.9FB	5067A
RD4A	5007A
RD4AL	5006A
RD4AM	5007A
RD4AN	5008A
RD4R7EB	5009A
RD4.3EB	5068A
RD4.3EC	5069A
RD4.7EB	5069A
RD5-1E	135A
RD5-6C	136A
RD5-6E	136A
RD5-6EC	136A
RD-5A	135A
RD5AK	135A
RD5AL	5009A
RD5AM	5009A
RD5AN	5010A
RD5B	135A
RD5C	5177AK
RD5CL	5175AK
RD5CM	5176AK
RD5CN	5176AK
RD5D	5177AK
RD5DL	5175AK
RD5DM	5176AK
RD5DN	5176AK
RD5E	5011A
RD5E-C	5011A
RD-5.1E	5116A
RD5.1E	135A
RD5.1E-B	135A
RD5.1E-C	135A
RD-5.1EB	139A
RD5.1EC	135A
RD-5.1EC	135A
RD5.1EC	135A
RD5.1FB	5116A
RD5.6	136A
RD5.6E	136A
RD5.6E-B	136A
RD5.6EB	136A
RD5.6EC	136A
RD5.6EK	136A
RD5.6EP	5011A
RD5.6F	136A
RD5.6FA	136A
RD5.6FB	136A
RD35.68	135A
RD6	136A
RD-6A	136A
RD6A	136A
RD6AL	5011A
RD6AM	136A
RD6AN	5011A
RD6C	5179AK
RD6CL	5178AK
RD6CM	5178AK
RD6CN	5179AK
RD6D	5179AK
RD6DL	5178AK
RD6DM	5178AK
RD6DN	5179AK
RD-6L	137A
RD-6M	136A
RD6.2E	137A
RD6.2EB	137A
RD6.2F	137A
RD6.2FA	137A
RD6.2FB	137A
RD6.8A	5071A
RD6.8E	5071A
RD-6.8EB	5071A
RD6.8EB	5071A
RD6.8EC	138A
RD6.8F	5071A
RD-6.8F	5071A
RD6.8FA	5071A
RD6.8FB	5071A
RD7A	138A
RD-7A	138A
RD7AM	5014A
RD7AN	5014A
RD7C	5182AK

To Be Replaced	ECG Replacement
RD7CL	5180AK
RD7CM	5181AK
RD7CN	5182AK
RD7D	5182AK
RD7DL	5180AK
RD7DM	5181AK
RD7DN	5182AK
RD7R5EB	138A
RD7R5FB	138A
RD7.5E	138A
RD7.5EB	138A
RD-7.5EB	138A
RD7.5ED	5015A
RD7.5F	138A
RD7.5FA	138A
RD7.5FB	138A
RD8	5072A
RD8R2EC	5072A
RD8.2	5072A
RD8.2C	5072A
RD8.2E	5072A
RD-8.2E	5072A
RD8.2EA	5072A
RD8.2EB	5072A
RD-8.2EC	5072A
RD8.2EC	5072A
RD8.2ED	5072A
RD8.2EK	5072A
RD8.2F	5072A
RD8.2FA	5072A
RD8.2FB	5072A
RD8.2FC	5072A
RD-8.2HD	5072A
RD9	139A
RD9A	139A
RD-9A	139A
RD9A	139A
RD9A(10)	139A
RD-9A(L)	141A
RD9A-N	139A
RD9AL	5073A
RD9AM	5018A
RD9AN	5018A
RD9B	5073A
RD9C	5183AK
RD9CL	5183AK
RD9CM	5184AK
RD9CN	5185AK
RD9D	5183AK
RD9DL	5183AK
RD9DM	5184AK
RD9DN	5185AK
RD-9E	140A
RD9E	139A
RD-9L	139A
RD9.EB	139A
RD-9.1E	139A
RD9.1E	139A
RD9.1E-C	139A
RD9.1EA	139A
RD9.1EB	139A
RD-9.1EB	139A
RD-9.1EC	139A
RD9.1EC	139A
RD9.1ED	139A
RD9.1EK	139A
RD9.1F	139A
RD9.1FA	139A
RD9.1FB	139A
RD-9.1FB	139A
RD9.1FC	5018A
RD9.1FK-3	139A
RD9.1Z	139A
RD9.1Z(1)	139A
RD9.3	139A
RD10	140A
RD10E	140A
RD10EA	140A
RD10EB	140A
RD-10EB	140A
RD10EB-2	140A
RD10EK-7	140A
RD10F	140A
RD10FA	140A
RD10FB	140A
RD10.0E	140A
RD11A	140A
RD11AL	5019A
RD11AM	5019A
RD11AN	5020A
RD-11B	140A
RD11C	5186AK
RD11CL	5186AK
RD11CM	5186AK
RD11CN	5187AK
RD11D	5186AK
RD11DL	5186AK
RD11DM	5186AK
RD11DN	5187AK
RD11E	5074A
RD11EA	5074A
RD11EB	5074A
RD11EC	142A
RD11EM	5074A
RD11F	5074A
RD11FA	5074A
RD11FB	5074A
RD12	142A
RD12E	5021A
RD12EA	5021A
RD12EB	142A
RD-12EB	142A
RD12EC	142A
RD12F	142A
RD12FA	142A

To Be Replaced	ECG Replacement
RD12FB	142A
RD13	143A
RD13A	143A
RD-13A	143A
RD13A	143A
RD13A-N	143A
RD13AK	143A
RD-13AK	143A
RD-13AK-P	143A
RD13AKP	143A
RD-13AKP	143A
RD13AL	5021A
RD-13AL	5072A
RD13AM	5022A
RD-13AN	5022A
RD13AN	143A
RD13AN-P	143A
RD13B	143A
RD13B-Z	143A
RD13C	5128A
RD13CL	5188AK
RD13CM	5189AK
RD13CN	5189AK
RD13D	5128A
RD13DL	5188AK
RD13DM	5189AK
RD13DN	5189AK
RD13E	5022A
RD-13E	143A
RD13EA	5022A
RD13EB	143A
RD13F	143A
RD13FA	143A
RD13FB	143A
RD13K	142A
RD-13M	143A
RD-15E	145A
RD15E	145A
RD15EA	5024A
RD15EB	145A
RD15EC	145A
RD15F	145A
RD15FA	145A
RD15FB	145A
RD15S	145A
RD16A	5025A
RD16A-N	5075A
RD16AL	5023A
RD16AM	5024A
RD16AN	5026A
RD16C	5192AK
RD-16C	5076A
RD16C-Y	5075A
RD16CL	5190AK
RD16CM	5191AK
RD16CN	5193AK
RD16D	5192AK
RD16DL	5190AK
RD16DM	5191AK
RD16DN	5193AK
RD-16E	5076A
RD16E	5076A
RD16E-M	5075A
RD16E-N	5075A
RD16EB	5075A
RD16EC	5076A
RD16F	5075A
RD16FA	5075A
RD16FB	5075A
RD-16H	145A
RD16H	145A
RD-16HA	145A
RD-16-N	5076A
RD-18E	5078A
RD18EB	5077A
RD-18EC	5078A
RD18F	5077A
RD18FA	5077A
RD18FB	5077A
RD19A	5028A
RD-19A	5079A
RD19AL	5028A
RD19AM	5028A
RD-19AM	5079A
RD19C	5195AK
RD19CL	5194AK
RD19CM	5196AK
RD19D	5195AK
RD19DL	5194AK
RD19DM	5196AK
RD-20E	5079A
RD20E	5079A
RD20EB	5079A
RD20F	5079A
RD20FA	5079A
RD20FB	5079A
RD22	5080A
RD22E	5080A
RD22EB	5080A
RD22F	5080A
RD22FA	5080A
RD22FB	5080A
RD-24A	5081A
RD24A	5081A
RD24AL	5081A
RD24AM	5081A
RD24AN	5081A
RD24C	5198AK
RD24CL	5197AK
RD24CM	5197AK
RD24CN	5199AK
RD24D	5198AK
RD24DL	5197AK
RD24DM	5197AK
RD24DN	5199AK

To Be Replaced	ECG Replacement
RD24F	5081A
RD24FA	5081A
RD24FB	5081A
RD27EB	146A
RD27F	146A
RD27FA	146A
RD27FB	146A
RD29A	5034A
RD29AL	5033A
RD29AM	5034A
RD29AN	5035A
RD29C	5201AK
RD29CL	5200AK
RD29CM	5201AK
RD29CN	5202AK
RD29D	5201AK
RD29DL	5200AK
RD29DM	5201AK
RD29DN	5203AK
RD30EB	5084A
RD30F	5084A
RD30FA	5084A
RD30FB	5084A
RD33EB	147A
RD33F	147A
RD33FA	147A
RD33FB	147A
RD-35A	147A
RD35AE	5038A
RD35AL	5036A
RD35AM	5037A
RD35C	5204AK
RD35CL	5203AK
RD35CM	5204AK
RD35CN	5205AK
RD35D	5204AK
RD35DL	5203AK
RD35DM	5204AK
RD35DN	5205AK
RD36EB	5085A
RD36F	5085A
RD36FA	5085A
RD36FB	5085A
RD39EB	5086A
RD39F	5086A
RD39FA	5086A
RD39FB	5086A
RD56B	136A
RD-91	139A
RD91E	139A
RD-91E	139A
RD-96	139A
RD250	116
RD-1003	116
RD1343	177
RD3472	116
RD-3472	116
RD9037	116
RD26235-1	116
RD-26235-1	116
RD29799P	116
RD-29799P	116
RD31903P	116
RD-31903P	116
RE1	100
RE2	116
RE-2	116
RE2	101
RE-3	116
RE3(Diode)	116
RE3(Rect)	116
RE3(Transistor)	102
RE4	102A
RE5	103
RE6	103A
RE7	104
RE7MP	104MP
RE8	105
RE9	107
RE9.1E	139A
RE10	108
RE11	121
RE11MP	121
RE12	123
RE13	123A
RE14	124
RE15	126
RE16	127
RE17	128
RE18	129
RE19	130
RE20	131
RE20MP	131
RE21	196
RE22	197
RE23	154
RE24	157
RE25	158
RE26	159
RE27	160
RE28	161
RE29	162
RE30	163A
RE31	164
RE32	165
RE33	172A
RE34	175
RE35	176
RE36	179
RE37	181
RE39	183
RE40	184
RE41	185
RE42	186
RE43	187

To Be Replaced	ECG Replacement
RE45	132
RE46	133
RE47	109
RE48	112
RE49	116
RE50	117
RE51	125
RE52	177
RE53	106
RE54	156
RE57	323
RE58	323
RE59	324
RE60	287
RE61	281
RE62	234
RE63	290
RE64	199
RE66	194
RE67	199
RE68	218
RE69	160
RE70	128
RE73	171
RE74	180
RE75	188
RE76	189
RE77	191
RE78	194
RE79	195A
RE79A	195A
RE80	210
RE81	211
RE82	219
RE83	226
RE83MP	226
RE85	326
RE86	110
RE87	113
RE88	114
RE89	115
RE90	125
RE91	120
RE92	156
RE93P	173BP
RE94	519
RE95	5061A
RE96	5062A
RE97	5063A
RE98	5064A
RE99	5065A
RE100	5066A
RE101	134A
RE102	5067A
RE103	5068A
RE104	5069A
RE105	135A
RE107	136A
RE108	5070A
RE109	137A
RE110	5071A
RE111	138A
RE112	5072A
RE113	5073A
RE114	139A
RE115	140A
RE116	5074A
RE117	141A
RE118	142A
RE119	143A
RE120	144A
RE121	145A
RE122	5075A
RE123	5076A
RE124	5077A
RE125	5078A
RE126	5079A
RE127	5080A
RE128	5081A
RE129	5082A
RE130	147A
RE131	5086A
RE132	149A
RE133	5096A
RE134	5172A
RE135	5173A
RE136	5174A
RE137	5175A
RE138	5176A
RE140	5177A
RE141	5178A
RE142	5179A
RE143	5180A
RE144	5181A
RE145	5182A
RE146	5183A
RE147	5184A
RE148	5185A
RE149	5186A
RE150	5187A
RE152	5188A
RE153	5189A
RE154	5190A
RE155	5191A
RE156	5192A
RE157	5193A
RE158	5194A
RE159	5195A
RE160	5196A
RE161	5197A
RE162	5198A
RE163	5199A
RE164	5202A
RE165	5205A
RE166	5209A

To Be Replaced	ECG Replacement
RE167	118
RE168	5454
RE169	5482
RE170	5542
RE171	5455
RE172	5483
RE173	5543
RE174	5457
RE175	5485
RE176	5545
RE177	5487
RE178	5547
RE179	5640
RE180	5662
RE181	5682
RE182	5641
RE183	5663
RE184	5683
RE185	5642
RE186	5665
RE187	5685
RE188	5643
RE189	5667
RE190	6408
RE191	198
RE192	199
RE193	234
RE195	613
RE196	192
RE197	193
RE198	237
RE199	222
RE200	503
RE201	236
RE202	224
RE203	235
RE204	302
RE205	196
RE206	282
RE207	287
RE208	288
RE209	295
RE210	297
RE211	298
RE212	299
RE213	300
RE214	500A
RE215	523
RE216	502
RE217	504
RE218	5404
RE219	294
RE220	293
RE243	521
RE300-IC	703A
RE301-IC	709
RE302-IC	705A
RE303-IC	783
RE304-IC	749
RE305-IC	712
RE306-IC	790
RE307-IC	714
RE308-IC	715
RE309-IC	722
RE310-IC	747
RE311-IC	708
RE312-IC	739
RE313-IC	738
RE314-IC	742
RE315-IC	737
RE316-IC	736
RE317-IC	743
RE318-IC	721
RE319-IC	718
RE320-IC	720
RE321-IC	740A
RE322-IC	804
RE323-IC	790
RE324-IC	791
RE325-IC	1004
RE326-IC	1006
RE327-IC	1052
RE328-IC	1080
RE329-IC	1103
RE330-IC	1142
RE331-IC	748
RE332-IC	788
RE333-IC	797
RE334-IC	801
RE335-IC	1003
RE336-IC	1005
RE337-IC	1046
RE338-IC	1058
RE339-IC	1081A*
RE340-M	1087
RE340M-IC	1087
RE341-M	1082
RE342-M	1092
RE343-IC	1096
RE343-M	1100
RE360-IC	1233
RE504	117
RE1001	108
RE1002	108
RE2001	161
RE2002	161
RE3001	107
RE3002	107
RE4001	199
RE4002	199
RE4010	199
RE5001	161
RE5002	161
REJ70148	113
REJ70148A	113

To Be Replaced	ECG Replacement
REJ70643	116
REJ70931	116
REJ71253	177
REJ701148-1	113
REN500A	500A
REN521	521
REN523	523
REN712	712
REN714	714
REN723	723
REN736	736
REN738	738
REN788	788
REN791	791
REN801	801
REN977	977
REN1004	1004
REN1005	1005
REN1006	1006
REN1056	1056
REN1058	1058
REN1080	1080
REN1081A	1081A*
REN1082	1082
REN1128	1128
REN1130	1130
REN1133	1133
REN1134	1134
REN1135	1135
REN1155	1155
REN1167	1167
REN1192	1192
REN5400	5400
REN7400	7400
REN7474	7474
REN7493A	7493A
RER023	113
RER-023	178MP
RET20	116
RF03C06	503
RF1A	506
RF8.2E	5072A
RF-8.2E	5072A
RF200	161
RF1811	109
RF2123	345
RF2127	352
RF3160	116
RF-3160	116
RF3472	116
RF5464	113
RF5464-1P	113
RF5465	113
RF5465-1P	113
RF5794	114
RF-6235-1	116
RF26231-1	116
RF26234-1	116
RF26235-1	116
RF26235-2	116
RF26235-5	116
RF29799P	116
RF31903P	116
RF32101-8	116
RF-32101-8	116
RF32101-9	116
RF32101R	116
RF-32101R	116
RF32102R	119
RF32103-1	118
RF32103R	118
RF32412-3	116(3)
RF32426-7	178MP
RF32645	116
RF33426-7	113
RF33550-1	109
RF33976	116
RF34383	116
RF34661	177
RF60034	109
RFA70597	116
RFA70600	116
RFC61197	116
RFJ6134	116
RFJ30704	116
RFJ-30704	116
RFJ31218	116
RFJ-31218	116
RFJ31362	116
RFJ-31362	116
RFJ31363	116
RFJ-31363	116
RFJ33292	116
RFJ-33292	116
RFJ60286	116
RFJ60313	113
RFJ60366	116
RFJ-60366	116
RFJ60614	109
RFJ60869	116
RFJ70147	5804
RFJ70148	113
RFJ70149	506
RFJ70431	113
RFJ70432	116
RFJ70487	116
RFJ70643	115
RFJ70703	116
RFJ70931	116
RFJ70970	116
RFJ70971	506
RFJ70974	116
RFJ70976	506
RFJ70977	116
RFJ71122	116

To Be Replaced	ECG Replacement
RFJ71123	156
RFJ71480	139A
RFJ72360	116
RFJ72787	116
RFJ711122	116
RFJZ0432	116
RFL30596	116
RFL-30596	116
RFM33160	116
RFM-33160	116
RFP33118	116
RFP-33118	116
RFS61436	117
RFV60500	116
RG100B	116
RG100D	116
RG100G	116
RG100J	116
RG1004	116
RG1127	116
RGP-10D	116
RGP10J	552
RH-1	116
RH-1	506
RH-1V	125
RH-1X0001TAZZ	748
RH-1X0004CEZZ	749
RH-1X0017TAZZ	712
RH-1X0020CEZZ	1004
RH-1X0021CEZZ	1080
RH-1X0022CEZZ	1051
RH-1X0023CEZZ	1079
RH-1X0024CEZZ	1105
RH-1X0025CEZZ	1050
RH-1X0032CEZZ	1089*
RH-1X0038CEZZ	712
RH-1X0043CEZZ	712
RH-1X0047CEZZ	1189
RH-1X0048CEZZ	1190
RH-1X1020AFZZ	1115A
RH1X1030AFZZ	1237
RH-1X1038AFZZ	1208
RH120	123A
RH-AX0038CEZZ	142A
RH-DX0003SEZZ	116
RH-DX0003TAZZ	116
RH-DX0004TAZZ	506
RH-DX0008CEZZ	116
RH-DX0017CEZZ	506
RH-DX0025CEZZ	116
RH-DX0026AGZZ	116
RH-DX0028CEZZ	506
RH-DX0029CEZZ	506
RH-DX0033TAZZ	177
RH-DX0038CEZZ	116
RH-DX0039TAZZ	506
RH-DX0041CEZZ	116
RH-DX0042CEZZ	116
RH-DX0043TAZZ	116
RH-DX0045CEZZ	506
RH-DX0046CEZZ	177
RH-DX0048CEZZ	519
RH-DX0051CEZZ	506
RH-DX0054CEZZ	177
RH-DX0055TAZZ	116
RH-DX0056CEZZ	116
RH-DX0056TAZZ	506
RH-DX0059TAZZ	116
RH-DX0062CEZZ	506
RH-DX0063CEZZ	506
RH-DX0064CEZZ	116
RH-DX0065CEZZ	506
RH-DX0065CZZ	506
RH-DX0066TAZZ	116(4)
RH-DX0067TAZZ	116
RH-DX0068TAZZ	116
RH-DX0069TAZZ	116
RH-DX0072CEZZ	116
RH-DX0073CEZZ	506
RH-DX0073TAZZ	116(4)
RH-DX0077CEZZ	525
RH-DX0081CEZZ	506
RH-DX0081TAZZ	116
RH-DX0083CEZZ	177
RH-DX0085TAZZ	506
RH-DX0090CEZZ	506
RH-DX0091CEZZ	156
RH-DX0092CEZZ	506
RH-DX0096CEZZ	506
RH-DX0100CEZZ	506
RH-DX1005AFZZ	116
RH-DY0003SEZZ	116
RH-DZ0009YBEO	544
RH-EX0011CEZZ	143A
RH-EX0012CEZZ	5082A
RH-EX0013CEZZ	5078A
RH-EX0014TAZZ	141A
RH-EX0015CEZZ	141A
RH-EX0019CEZZ	5070A
RH-EX0019TAZZ	142A
RH-EX0021TAZZ	5020A
RH-EX0022CEZZ	5077A
RH-EX0024CEZZ	137A
RH-EX0024TAZZ	135A
RH-EX0027CEZZ	5078A
RH-EX0033CEZZ	147A
RH-EX0034CEZZ	5081A
RH-EX0037CEZZ	5079A
RH-EX0038CEZZ	142A
RH-EX0047CEZZ	142A
RH-EX0048CEZZ	137A
RH-EX0053CEZZ	5085A
RH-EX0054CEZZ	5097A
RH-EX0057CEZZ	148A
RH-EX0062CEZZ	506

To Be Replaced	ECG Replacement
RH-EX0065CEZZ	5076A
RH-EX013CEZZ	5078A
RH-EX022CEZZ	5078A
RH-IX0001PAZZ	1187
RH-IX0001TAZZ	748
RH-IX0004CE	749
RH-IX0004CEZZ	749
RH-IX0017TAZZ	712
RH-IX0020CE	1004
RH-IX0020CEZZ	1004
RH-IX0021CEZZ	1080
RH-IX0022CEZZ	1051
RH-IX0023CEZZ(IF)	1074
RH-IX0023CEZZ(Vert)	1079
RH-IX0024CEZZ	1105
RH-IX0025CEZZ	1050
RH-IX0032CEZZ	1089*
RH-IX0037CEZZ	147A
RH-IX0043CEZZ	712
RH-IX0047CE	1189
RH-IX0047CEZZ	1189
RH-IX0048CEZZ	1190
RH-IX103AFZZ	1237
RH-IX1020AFZZ	1115A
RH-IX1039AFZZ	1197
RH-IX1061AFZZ	1207
RH-TX1008AFZZ	123A
RH-VX0004TAZZ	601
RH-VX0009TAZZ	601
RHDX0033TAZZ	177
RHDX0043TAZZ	116
RHIX0043CE	712
RI4782	288
RI4010658	519
RIN1102	722
RJF60313	113
RKZ12003	519
RKZ120101	519
RL005	125
RL010	125
RL020	125
RL040	125
RL060	125
RL31	109
RL32	109
RL32G	109
RL34	109
RL34G	109
RL41	109
RL41G	109
RL42	109
RL52	109
RL-209	3007
RL-209-02	3007
RL-209-03	3007
RL-209-04	3007
RL232G	109
RL246	109
RL252	109
RL709T	909
RL711T	911
RLB-17	199
RLF1G	116
RLH111	7410
RM-1	506
RM-1V	116
RM1Z	116
RM-1Z	116
RM1ZM	116
RM2AV	125
RM2C	125
RM-25	5089A
RM25	5089A
RM26	116
RM-26	5092A
RM26(ZENER)	5089A
RM257	148A
RMP	116
RMVTC00921-3	114
RN515	5940
RN1015	5942
RN1120	5982
RN2015	5944
RN3015	5948
RN4015	5948
RN5015	5952
RN6015	5952
RP-1D	116
RP-9A	139A
RQ-409S	116(2)
RQ-444S	229
RR7504	123A
RR8068	123A
RR8070	108
RR8116	108
RR8118	108
RR8119	108
RR8914	123A
RR8989	108
RR12766	717
RRB24-06	116
RRET-0021CEZZ	1189
RRET-0025CEZZ	1189
RS-05	5800
RS5.6C	136A
RS10	116
RS-35	147A
RS-35/AWQ1-33	147A
RS-101	160
RS-102	158
RS-103	160
RS-104	101
RS-105	104
RS-106	105
RS-107	123A

To Be Replaced	ECG Replacement
RS-108	123A
RS-109	108
RS-110	159
RS128	123A
RS132	128
RS136	123A
RS220AF	116
RS230AF	116
RS276-008	703A
RS276-009	923
RS276-038	941
RS276-1722	955M
RS276-1801	7400
RS276-1802	7404
RS276-1803	7473
RS276-1804	7441
RS276-1805	7447
RS276-1806	7445
RS276-1807	7410
RS276-1808	7490
RS276-1809	7420
RS276-1811	7402
RS276-1812	7440
RS276-1813	7476
RS276-1814	74121
RS276-1830	309K
RS-279US	199
RS406	102A
RS-406	102A
RS593	160
RS684	160
RS-684	126
RS685	160
RS-685	126
RS686	160
RS-686	102A
RS687	160
RS-687	102A
RS-805US	199
RS-862S	1074
RS1049	123A
RS1059	123A
RS1177A	525
RS1192	102A
RS-1192	102A
RS1234	117
RS1264	116
RS-1264	116
RS1290	139A
RS1296	116(4)
RS1296(SEARS)	506
RS-1347	116
RS1348	142A
RS1428	177
RS1513	101
RS1524	103A
RS-1524	103A
RS1530	101
RS1531	101
RS1532	101
RS1533	103A
RS1534	101
RS1536	101
RS-1536	101
RS1537	101
RS-1537	101
RS1538	101
RS-1538	101
RS1539	160
RS-1539	100
RS1540	102A
RS-1540	102A
RS1541	102A
RS-1541	102A
RS1542	102A
RS-1542	102A
RS1543	102A
RS-1543	102A
RS1544	102A
RS-1544	102A
RS1545	102A
RS-1545	101
RS1546	102A
RS-1546	102A
RS1547	101
RS-1547	101
RS1548	102A
RS-1548	102A
RS1549	103A
RS-1550	100
RS1550	160
RS1553	101
RS-1553	101
RS1554	160
RS-1554	126
RS1555	102A
RS-1555	102A
RS1720	116
RS1726	108
RS1749	116
RS1805	116
RS1811	109
RS1823	117
RS1832	116
RS-2001	101
RS-2002	160
RS-2003	126
RS-2004	102
RS-2005	102
RS-2006	104
RS-2007	158
RS-2008	154
RS-2009	123A
RS-2011	161
RS-2013	123A

To Be Replaced	ECG Replacement
RS-2014	128
RS-2015	108
RS-2016	123A
RS-2017	184
RS-2018	210
RS-2019	182
RS-2020	184
RS-2021	159
RS-2022	159
RS-2023	159
RS-2024	159
RS-2025	185
RS-2026	211
RS-2027	183
RS-2028	132
RS-2029	6409
RS-2042	249
RS2042	249
RS2350	102A
RS-2350	102A
RS2351	102A
RS-2351	102A
RS2352	102A
RS-2352	102A
RS2353	102A
RS-2353	102A
RS2354	102A
RS-2354	102A
RS2355	102A
RS-2355	102A
RS2356	101
RS2359	101
RS-2359	101
RS2360	101
RS-2360	101
RS2364	101
RS-2364	101
RS2365	101
RS-2365	101
RS2366	101
RS-2366	101
RS2367	102A
RS-2367	102A
RS2373	102A
RS-2373	101
RS2374	102A
RS-2374	101
RS2375	101
RS-2375	101
RS2675	102A
RS-2675	102A
RS2677	102A
RS-2677	102A
RS2679	160
RS2680	160
RS2683	160
RS-2683	100
RS2684	160
RS-2684	100
RS2685	160
RS-2685	100
RS2686	160
RS-2686	100
RS2687	160
RS-2687	100
RS2688	160
RS-2688	100
RS2689	102A
RS-2689	102A
RS2690	100
RS-2690	100
RS2691	100
RS-2691	100
RS2692	100
RS-2692	100
RS2694	160
RS-2694	100
RS2695	160
RS-2695	100
RS2696	100
RS-2696	100
RS2697	102A
RS-2697	102A
RS2801	109
RS2867	102A
RS2914	123A
RS3211	102A
RS3275	102A
RS-3275	102A
RS3276	102
RS-3276	102A
RS3277	160
RS-3277	100
RS3278	160
RS-3278	100
RS3279	160
RS-3279	100
RS3280	102A
RS3281	100
RS3282	102A
RS-3282	102A
RS3283	102A
RS-3283	102A
RS3284	102A
RS-3284	102A
RS3285	102A
RS-3285	102A
RS3286	102A
RS-3286	102A
RS3287	100
RS3288	160
RS-3288	100
RS3289	102A
RS-3289	102A
RS3293	102A

@, * — See special notes on inside back cover.

To Be Replaced	ECG Replacement
RS3299	102A
RS-3299	102A
RS3301	102A
RS-3301	102A
RS3306	101
RS3308	102A
RS-3308	102A
RS3309	160
RS-3309	100
RS3310	102A
RS-3310	102A
RS3316	102A
RS-3316	102A
RS3316-1	102A
RS-3316-1	102A
RS3316-2	102A
RS-3316-2	102A
RS3318	102A
RS-3318	102A
RS3322	160
RS-3322	126
RS3323	160
RS-3323	126
RS3324	160
RS-3324	126
RS3358-1	121
RS3359-1	121
RS3570	116
RS-3570	116
RS3668	160
RS3717	102A
RS3726	102A
RS3727	116
RS-3727	116
RS3857	102A
RS3858	121
RS3858-1	121
RS-3858-1	121
RS3862	160
RS-3862	126
RS3863	160
RS-3863	126
RS3864	160
RS3866	102A
RS-3866	126
RS3867	158
RS-3867	100
RS3868	160
RS-3868	100
RS3880	102A
RS3892	100
RS-3892	160
RS3897	102A
RS3898	160
RS-3898	160
RS3900	160
RS-3900	160
RS3901	160
RS3902	160
RS-3902	160
RS3903	160
RS-3903	160
RS3904	102A
RS-3904	102A
RS3905	160
RS3906	160
RS3907	160
RS-3907	100
RS3911	160
RS-3911	160
RS3912	160
RS3913	102A
RS-3913	100
RS3914	100
RS3915	100
RS3925	102A
RS-3925	102A
RS3926	102A
RS3929	160
RS-3929	100
RS3931	103A
RS3959	121
RS3959-1	121
RS3986	160
RS3995	160
RS5008	102A
RS-5008	102A
RS5101	160
RS5102	102A
RS5103	102A
RS5104	100
RS-5104	100
RS5105	100
RS-5105	100
RS5106	160
RS-5106	100
RS5107	160
RS-5107	126
RS5108	160
RS-5108	126
RS5109	160
RS-5109	126
RS5201	160
RS-5201	126
RS5202	102A
RS5203	102A
RS5204	160
RS5205	160
RS-5205	126
RS5206	160
RS-5206	102A
RS5207	160
RS-5207	126
RS5208	160
RS-5208	160

To Be Replaced	ECG Replacement
RS5209	160
RS-5209	126
RS5243-2	102A
RS5301	160
RS-5301	126
RS5302	100
RS5303	100
RS5305	160
RS-5305	126
RS5306	160
RS-5306	126
RS5311	160
RS-5311	102A
RS5312	160
RS-5312	126
RS5313	160
RS-5313	126
RS5314	160
RS5401	102A
RS-5401	100
RS5402	100
RS5403	100
RS5406	102A
RS-5406	102A
RS5502	102A
RS-5502	102A
RS5503	102A
RS5504	100
RS-5504	100
RS5505	102A
RS-5505	102A
RS5506	102A
RS-5506	102A
RS5507	102A
RS5511	100
RS-5511	100
RS5530	102A
RS-5530	102A
RS5531	102A
RS-5531	102A
RS5532	102A
RS-5532	102A
RS5533	102A
RS-5533	102A
RS5534	102A
RS-5534	102A
RS5535	102A
RS-5535	102A
RS5536	102A
RS-5536	102A
RS5540	100
RS-5540	100
RS5541	102A
RS-5541	102A
RS5542	102A
RS-5542	102A
RS5543	102A
RS5544	102A
RS-5544	102A
RS5545	102A
RS5551	102A
RS-5551	102A
RS5552	102A
RS-5552	102A
RS5553	102A
RS-5553	102A
RS5554	102A
RS-5554	102A
RS5555	102A
RS-5555	102A
RS5556	102A
RS-5556	102A
RS5557	102A
RS-5557	102A
RS5558	102A
RS-5558	102A
RS5563	102A
RS5564	102A
RS5565	102A
RS5566	102A
RS5567	102A
RS5568	102A
RS5602	102A
RS-5602	102A
RS5603	102A
RS5605	102A
RS5607	102A
RS5608	102A
RS5610	102A
RS5612	121
RS5613	121
RS-5613	121
RS5614	121
RS5616	121
RS5704	102A
RS-5704	102A
RS5704-2	102A
RS5708	102A
RS-5708	102A
RS5708-2	102A
RS-5708-2	102A
RS5709	102A
RS-5709	102A
RS5711	102A
RS-5711	102A
RS5715	176
RS5715-1	176
RS5717	102A
RS-5717	102A
RS5717-1	102A
RS5717-3	102A
RS-5717-3	102A
RS5717-6	102A
RS-5717-6	102A
RS5720	102A

To Be Replaced	ECG Replacement
RS-5720	102A
RS5731	102A
RS-5731	102A
RS5732	102A
RS5733	102A
RS-5733	102A
RS5734	102A
RS-5734	102A
RS5735	102A
RS-5735	176
RS5736	102A
RS-5736	102A
RS5737	102A
RS-5737	102A
RS5738	102A
RS5740	102A
RS5740-1	102A
RS5742	102A
RS-5742	102A
RS5743	102A
RS-5743	102A
RS5743-1	102A
RS-5743-1	102A
RS5743-2	102A
RS-5743-2	102A
RS5743-3	102A
RS-5743-3	102A
RS5743.3	100
RS5744	102A
RS-5744	102A
RS5744-3	102A
RS-5744-3	102A
RS5745	102A
RS5746	102A
RS5747	102A
RS5748	102A
RS5749	102A
RS-5749	102A
RS5750	102A
RS5751	102A
RS5752	102A
RS-5752	126
RS5753	126
RS-5753	126
RS5753-2	126
RS5754	126
RS-5754	126
RS5755	126
RS-5755	126
RS5756	126
RS-5756	126
RS5757	126
RS-5757	126
RS5758	126
RS-5758	126
RS5759	126
RS-5759	126
RS5760	126
RS-5760	126
RS5761	126
RS-5761	126
RS5762	126
RS-5762	126
RS5765	102A
RS5766	102A
RS5767	102A
RS5768	102A
RS5788	176
RS5802	126
RS-5802	126
RS5818	160
RS-5818	126
RS5825	102
RS5835	121
RS-5835	121
RS5851	123A
RS-5851	123A
RS5852	102A
RS-5852	102A
RS5853	123A
RS-5853	123A
RS5854	102A
RS-5854	102A
RS5855	121MP
RS-5855	121
RS5856	123A
RS-5856	123A
RS5857	123A
RS-5857	123A
RS6344	116
RS-6344	116
RS6461	116
RS-6461	116
RS6471	116
RS-6471	116
RS6523	108
RS6705	116
RS6821	126
RS6822	126
RS6824	100
RS6840	102A
RS6843	102
RS6843A	102A
RS6846	102
RS6846A	102A
RS7101	108
RS7102	108
RS-7102	108
RS7103	123A
RS-7103	123A
RS7104	108
RS-7104	108
RS7105	123A
RS-7105	123A
RS7106	108

To Be Replaced	ECG Replacement
RS-7106	108
RS7107	108
RS-7107	108
RS7108	123A
RS-7108	108
RS7109	108
RS-7109	108
RS7110	108
RS-7110	108
RS7111	123A
RS7112	108
RS7113	108
RS-7113	108
RS-7114	108
RS7114	229
RS7115	108
RS-7115	108
RS7116	108
RS7117	108
RS7118	108
RS7119	108
RS7120	108
RS7121	123A
RS7122	108
RS7123	108
RS7124	108
RS7125	108
RS7126	108
RS7127	123A
RS7128	108
RS7129	123A
RS7132	123A
RS7133	123A
RS7135	108
RS7136	123A
RS7138	108
RS7139	108
RS7140	108
RS7141	108
RS7142	108
RS7143	107
RS7144	108
RS7145	108
RS7160	123A
RS7161	108
RS7162	108
RS7163	108
RS7164	108
RS7165	108
RS7166	108
RS7167	108
RS7168	108
RS7169	108
RS7170	108
RS7173	229
RS7174	108
RS7175	108
RS7176	108
RS7177	108
RS7201	108
RS7202	108
RS-7202	108
RS7209	108
RS7210	108
RS7211	108
RS7212	108
RS7214	108
RS7215	108
RS7216	108
RS7217	108
RS7218	108
RS7219	108
RS7220	108
RS7221	108
RS7222	107
RS7223	123A
RS7224	123A
RS7225	108
RS7226	123A
RS7227	108
RS7228	108
RS7229	108
RS7230	108
RS7231	108
RS7232	123A
RS7233	229
RS7234	123A
RS7235	123A
RS7236	123A
RS7237	108
RS7241	123A
RS7242	123A
RS7310	124
RS7311	124
RS7312	124
RS7313	124
RS7315	124
RS-7315	124
RS7316	124
RS-7316	124
RS7317	124
RS-7317	124
RS7318	124
RS-7318	124
RS7320	124
RS7321	124
RS7327	124
RS7328	124
RS7329	124
RS7330	124
RS7333	108
RS7334	108
RS7365	124
RS7366	124
RS7367	124

To Be Replaced	ECG Replacement
RS7368	124
RS7405	123A
RS7406	123A
RS7407	123A
RS7408	123A
RS7409	123A
RS-7409	123A
RS7410	123A
RS7411	123A
RS-7411	123A
RS7412	123A
RS-7412	123A
RS7413	123A
RS-7413	123A
RS7415	123A
RS7421	123A
RS7504	123A
RS-7504	123A
RS7510	123A
RS7511	108
RS-7511	123A
RS7512	108
RS-7512	108
RS7513	123A
RS7513-15	123A
RS7514	123A
RS7515	123A
RS7516	123A
RS7517	123A
RS7517-19	123A
RS7518	123A
RS7519	123A
RS7520	108
RS7521	123A
RS7522	108
RS7523	107
RS7524	108
RS7525	123A
RS7526	123A
RS7527	123A
RS7528	123A
RS7529	123A
RS7530	123A
RS7532	108
RS7533	108
RS7542	123A
RS7543	123A
RS7544	123A
RS7555	123A
RS7568	102A
RS7606	123A
RS-7606	123A
RS7607	123A
RS-7607	123A
RS7609	123A
RS-7609	123A
RS7610	123A
RS-7610	123A
RS7611	123A
RS-7611	123A
RS7612	123A
RS-7612	123A
RS7613	123A
RS-7613	123A
RS7614	123A
RS-7614	123A
RS7620	123A
RS7621	123A
RS7622	123A
RS-7622	123A
RS7623	123A
RS-7623	123A
RS7624	123A
RS7625	123A
RS7626	123A
RS7627	123A
RS7628	123A
RS7634	123A
RS7635	123A
RS7636	123A
RS7637	123A
RS7638	123A
RS7639	123A
RS7640	123A
RS7641	123A
RS7642	123A
RS7643	123A
RS7665	159
RS-7665A	159
RS7672	128
RS7678	128
RS7814	123A
RS7916	132
RS8100	129
RS8101	128
RS8102	129
RS8103	128
RS8104	129
RS8105	128
RS8106	129
RS8107	128
RS8108	129
RS8109	128
RS8110	129
RS8111	128
RS8112	129
RS8113	128
RS8406	158
RS8407	103A
RS8420	103A
RS8421	102A
RS8424	158
RS8430	116
RS8441	103A
RS8442	123A

To Be Replaced	ECG Replacement
RS8443	103A
RS8444	102A
RS8445	103A
RS8446	158
RS8503	123A
RS9510	107
RS9511	107
RS9512	107
RS15048	123A
RS57042	102A
RS-57042	102A
RS57062	102A
RS-57062	102A
RS57433	102A
RS86057332	123A
RSKK36	176
RSLNA0004CEZZ	120
RSLNB0001CEZZ	113
RSLND0003CEZZ	506
RT100	123A
RT-100	123A
RT112	107
RT114	123A
RT121	158
RT141	128
RT-141	128
RT154	128
RT-154	130
RT175	132
RT180	222
RT185	102A
RT-185	102A
RT188	128
RT-188	128
RT213	116
RT215	116
RT218	177
RT482	128
RT483	128
RT484	128
RT697M	123A
RT699M	128
RT929H	123A
RT-929H	123A
RT-929-H	123A
RT930H	108
RT-930H	123A
RT1008	109
RT1106	109
RT1108	109
RT1116	171
RT1184	109
RT1306	136A
RT1306(G.E.)	136A
RT1595	116
RT1667	110MP
RT1669	177
RT1686	506
RT1689	177
RT1840	116
RT1893	171
RT2016	123A
RT-2016	109
RT2061(G.E.)	177
RT2230	102A
RT2309	199
RT2329	102A
RT2330	102A
RT2331	102A
RT2332	123A
RT2334	109
RT2451	110
RT2452	109
RT2669	116(2)
RT-2669	116
RT2694	109
RT2709	102A
RT2914	123A
RT2915	108
RT3063	123A
RT3064	123A
RT3065	159
RT3065A	159
RT3069	108
RT3070	108
RT3071	159
RT3071A	159
RT3072	109
RT3095	108
RT3096	103A
RT3097	102A
RT3098	102A
RT3099	109
RT3225	108
RT3226	108
RT3227	108
RT3228	123A
RT3229	102A
RT3230	102A
RT3231	102A
RT3232	108
RT3233	109
RT3336	109
RT3361	126
RT3362	126
RT3363	102A
RT3364	102A
RT3365	102A
RT3443	116
RT3449	102A
RT3466	160
RT3467	102A
RT3468	102A
RT3469	109
RT3564	102A

To Be Replaced	ECG Replacement
RT3565	123A
RT3566	102A
RT3567	123A
RT3568	102A
RT3574	138A
RT3671	145A
RT3671A	145A
RT3858	116
RT-3858	116
RT3981	116
RT4050	116
RT4232	116
RT-4232	116
RT4293	109
RT4525	160
RT4624	102A
RT4625	158
RT-4625	102A
RT4644	109
RT4760	123A
RT4761	199
RT4762	131
RT4764	116
RT4880	110
RT5061	108
RT5063	126
RT5070	116
RT5151	128
RT5152	128
RT5200	108
RT5201	108
RT5202	123A
RT5203	128
RT5204	128
RT5205	108
RT5206	123A
RT5207	123A
RT5208	199
RT5212	110
RT5213	109
RT5214	109
RT5215	5071A
RT5216	117
RT5217	177
RT-5217	177
RT5230	129
RT5379	110MP
RT5401	128
RT5402	128
RT5403	128
RT5404	128
RT5435	199
RT5464	107
RT5465	107
RT5466	126
RT5467	126
RT5468	102A
RT5470	110
RT5471	5071A
RT5472	116
RT5520	126
RT5521	102A
RT5522	102A
RT5551	123A
RT5554	177
RT5637	102A
RT5738	110
RT5793	136A
RT5900	108
RT5901	123A
RT5902	108
RT5903	108
RT5904	108
RT5905	199
RT5906	128
RT5907	128
RT5908	109
RT5909	177
RT5910	601
RT5911	116
RT5912	110
RT5939	109
RT6105	5072A
RT6105(G.E.)	5072A
RT6119	109
RT6157	108
RT6158	108
RT6159	108
RT6160	108
RT6179	109
RT6180	109
RT6181	109
RT6182	109
RT6183	109
RT6184	109
RT6189	109
RT6201	229
RT6202	229
RT6203	108
RT6204	233
RT6205	102A
RT6322	116
RT6332	116
RT6600	108
RT6601	107
RT6602	107
RT6604	102A
RT6605	116
RT6619	109
RT6728	110
RT6729	116(2)
RT6731	109,110MP
RT6732	123A
RT6733	123A
RT6734	102A

To Be Replaced	ECG Replacement
RT6735(NPN)	130
RT6735(PNP)	102A
RT6735(Silicon)	159
RT6736	102A
RT6737	199
RT6787	229
RT6790	1003
RT6791	116
RT6921	123
RT6922	5010A
RT6923	5072A
RT6988	160
RT6989	123A
RT6990	102A
RT6991	108
RT7311	124
RT7320	108
RT7321	108
RT7322	123A
RT7323	108
RT7324	108
RT7325	123A
RT7326	123A
RT7327	123A
RT7330	109
RT7357	199
RT7399	1003
RT7400	103A
RT7401	102A
RT7402	166
RT7511	123A
RT7514	123A
RT7515	123A
RT7517	123A
RT7518	123A
RT7528	123A
RT7538	110
RT7539	137A
RT7557	123A
RT7558	158
RT7559	199
RT7634	116
RT7636	109
RT-7636	109
RT7638	123A
RT7689	109
RT7703	229
RT7704	107
RT7845	123A
RT7846	158
RT7848	5800
RT7849	116
RT7850	116
RT7932	158
RT7943	123A
RT7944	103A
RT7945	128
RT7946	177
RT8047	199
RT8193	123A
RT8195	123A
RT8197	123A
RT8198	123A
RT8199	117
RT8200	5022A
RT8201	123A
RT8231	116
RT8331	132
RT8332	123A
RT8333	229
RT8339	139A
RT8340	116
RT8442	102A
RT8527	229
RT8602	102A
RT8665	125
RT8666	199
RT8667	132
RT8668	107
RT8669	107
RT8670	290
RT8671	109
RT8839	117
RT8840	116
RT8841	116
RT8842	158
RT8863	199
RT8895	159
RT61012	109
RT-61012	190
RT61014	126
RT-61014	126
RT61015	102A
RT-61015	158
RT61016	102A
RT-61016	158
RT69221	123A
RTC0120	5404
RTC0125	5405
RTC0130	5405
RTC0201	5400
RTC0203	5400
RTC0206	5401
RTC0210	5402
RTC0215	5403
RTC0220	5404
RTC0225	5405
RTC0230	5405
RTC0301	5400
RTC0303	5400
RTC0306	5401
RTC0310	5402
RTC0315	5403
RTC0320	5404
RTC0325	5405

To Be Replaced	ECG Replacement
RTC0330	5405
RTC0401	5400
RTC0403	5400
RTC0406	5401
RTC0410	5402
RTC0415	5403
RTC0420	5404
RTC0425	5405
RTC0430	5405
RTJ0201	5400
RTJ0203	5400
RTJ0206	5401
RTJ0210	5402
RTJ0215	5403
RTJ0220	5404
RTJ0225	5405
RTJ0230	5405
RTL0605	5461
RTL0610	5462
RTL0620	5463
RTL0640	5465
RTL0805	5461
RTL0810	5462
RTL0820	5463
RTL0840	5465
RTN0102	5470
RTN0105	5470
RTN0110	5471
RTN0120	5472
RTN0130	5473
RTN0140	5474
RTN0150	5475
RTN0160	5476
RTN0202	5480
RTN0205	5481
RTN0210	5482
RTN0220	5483
RTN0230	5484
RTN0240	5485
RTN0250	5486
RTN0260	5487
RTN1001	804
RTN1102	722
RTS0202	5514
RTS0205	5514
RTS0210	5514
RTS0220	5514
RTS0230	5515
RTS0240	5515
RTS0250	5516
RTS0260	5516
RTS0502	5514
RTS0505	5514
RTS0510	5514
RTS0520	5514
RTS0530	5515
RTS0540	5515
RTS0550	5516
RTS0560	5516
RTS0702	5517
RTS0705	5517
RTS0710	5517
RTS0720	5517
RTS0730	5518
RTS0740	5518
RTS0750	5519
RTS0760	5519
RTU0102	5500
RTU0105	5501
RTU0110	5502
RTU0120	5504
RTU0130	5506
RTU0140	5507
RTU0150	5508
RTU0160	5529
RTU0202	5520
RTU0205	5521
RTU0210	5522
RTU0220	5524
RTU0230	5526
RTU0240	5527
RTU0250	5528
RTU0260	5529
RTU0710	5542
RTU0720	6543
RTU0730	5544
RTU0740	5545
RTU0760	5547
RU1	116
RU-1	116
RU2	116
RU-2	506
RU2	506
RU-2V	506
RU-IN	506
RUD2DP22/1B	116(4)
RV06	116
RV06/7825B	116
RV1SM5104	1255
RV6.2	137A
RV1017	177
RV1059	159
RV1068	229
RV1180	102A
RV1181	136A
RV1189	116
RV1226	177
RV1395	123A
RV1424	116
RV1424/EA1424	116
RV1467	108
RV1468	108
RV1469	108
RV1470	108
RV1471	123A

To Be Replaced	ECG Replacement
RV1472	129
RV1473	128
RV1474	123A
RV1475	102A
RV1476	5804
RV1478	116
RV1479	109
RV2068	293
RV2069	129
RV2070	199
RV2071	177
RV2072	116
RV2134	123A
RV2213	139A
RV2220	116
RV2248	199
RV2249	123A
RV2250	116
RV2260	159
RV-2289	116
RV2289	116
RV2327	116
RV2335	290
RV2351	159
RV2353	234
RV2354	199
RV2355	290
RV2356	187
RVD08C22/1A	116
RVD1K110	109
RVD1N34A	109
RVD1N4738	5072A
RVD1N4739	138A
RVD1N4740	140A
RVD1S50S	614
RVD1SS54	116
RVD2-1K110	109
RVD2DP	116
RVD2DP22/1C	166
RVD2DP221B	166
RVD2DP221P	116
RVD2P22/1B	116
RVD4B265J2	116
RVD8MB4	166
RVD8MBA	116(4)
RVD10D1	116
RVD10D1LF	116
RVD10DC1	116
RVD10DC1R	116
RVD10E1	116
RVD10E1LF	116
RVD12B-1	166
RVD101LF	177
RVD1150M	601
RVD14733	135A
RVDC08P1	116(2)
RVDC08P1R	113
RVDCD0033	5070A
RVDD124B	166
RVDD1245	166
RVDDS-410	116
RVDEQA0106S	5070A
RVDEQA0107S	138A
RVDKB162A	601
RVDKB162C5	116
RVDKB262	605
RVDKB265J2	177
RVDMZ-206	5070A
RVDMZ208	138A
RVDMZ209	139A
RVDR5R6EB	5070A
RVDR154B	166
RVDRD5A1E	5010A
RVDRD5R6EB	5070A
RVDRD7AN	5071A
RVDRD7R5E	158
RVDRD7R5 E	138A
RVDRD7R5EB	138A
RVDRD7R5FB	138A
RVDRD8R2EC	5072A
RVDRD9R1E	139A
RVDRD11AN	139A
RVDSD-1	116
RVDSD-1U	116
RVDSD-1Y	116
RVDSD-1Z	156
RVDSD113	614
RVDSG-5N	156
RVDSG-5P	156
RVDSR3AM2N	116
RVDVD1150L	601
RVDVD1150M	601
RVDVD1210L	605
RVDVD1210M	605
RVDVD1211L	605
RVDVD1212L	605
RVDVD1213	605
RVDVD1250M	177
RVDVD1251L	601
RVDVD1252L	605
RVDVD1253	604
RVILA3301	1006
RVIMC4080	1083
RVIUP78L05	977
RVIUPC20C2	1075A
RVIUPC22C	1078
RVIUPC566H3	1052
RVIUPD861	1254
RVIUPD861C	1254
RVS2SC645	108
RVTCS1381	123A
RVTCS1382	159
RVTCS1383	123A
RVTCS1384	108
RVTCS1473	199

To Be Replaced	ECG Replacement
RVTMK10-2	132
RVTMK10-E	132
RVTS22410	123A
RVTS22411	159
RX090	139A
RYDYD1150L	177
RYN12104	128
RYN121105	123A
RYN121105-3	123A
RYN121105-4	123A
RZ-3	156
RZ3.3	5066A
RZ3.6	134A
RZ3.9	5067A
RZ4.3	5068A
RZ4.7	5069A
RZ5.1	5010A
RZ5.6	136A
RZ6.2	137A
RZ6.8	5071A
RZ7.5	138A
RZ8.2	5072A
RZ9.1	139A
RZ10	140A
RZ12	142A
RZ13	143A
RZ14	5023A
RZ15	145A
RZ15A	145A
RZ-15AB	145A
RZ16	5025A
RZ18	5077A
RZ20	5029A
RZ22	5080A
RZZ2A	5030A
RZ25	5032A
RZ27	146A
RZ27A	146A
RZ27AC	146A
RZ30	5035A
RZ33A	5036A
RZ39A	5038A
RZ47A	5040A
RZ50	5041A
RZ56A	5042A
RZ68A	5045A
RZ82A	5047A
RZZ3.3	5066A
RZZ3.6	134A
RZZ3.9	5067A
RZZ4.3	5068A
RZZ4.7	5069A
RZZ5.1	5010A
RZZ5.6	136A
RZZ6.2	137A
RZZ6.8	5071A
RZZ7.5	138A
RZZ8.2	5072A
RZZ9.1	139A
RZZ10	140A
RZZ11	5074A
RZZ12	142A
RZZ13	143A
RZZ15	5023A
RZZ18	5027A
RZZ22	5030A
RZZ27	5033A
RZZ27-12	146A
RZZ156	145A
S	139A
S0001(HEP)	194
S0002	233
S0003(HEP)	192
S0004(HEP)	123A
S0005	287
S0005(HEP)	194
S0006(HEP)	234
S0008(HEP)	229
S004(HEP)	195A
S0010(HEP)	229
S0011(HEP)	123A
S0012(HEP)	129
S0013(HEP)	159
S0014(HEP)	123A
S0015	123A
S0016	108
S0020	108
S0021	108
S0022	123A
S0023	199
S0024	233
S0025	123A
S0026	159
S0027(HEP)	287
S0028(HEP)	288
S0029	288
S0030(HEP)	123A
S0031(HEP)	159
S0032(HEP)	159
S0033(HEP)	229
S0034(HEP)	123A
S001465	199
S001466	123A
S001683	128
S006793	199
S006927	199
S007220	128
S007764	199
S01	160
S01B01-02	116
S02	160
S03	160
S04	177
S04-1	177
S04A-1	177

To Be Replaced	ECG Replacement
S04B-1	177
S-05	116
S05	116
S-05-005	116
S-05-01	116
S-05/01	125
S010G	125
S011-0	141A
S025	102A
S028	101
S031A	123A
S037	123A
S-050	116
S065	158
S065A	102A
S074-005-0001	519
S074-007-0001	177
S082A	112
S088	102A
S0301JS2	5452
S0301JS3	5452
S0301LS3	5411
S0301RS3	5411
S0303LS3	5411
S0303RS2	5452
S0303RS3	5411
S0306G	5514
S0306H	5491
S0306L	5461
S0306R	5461
S0308G	5514
S0308H	5491
S0308L	5461
S0308R	5461
S0310G	5514
S0310H	5491
S0310L	5550
S0310R	5550
S0315G	5514
S0315H	5501
S0315L	5550
S0315R	5550
S0320G	5514
S0320H	5521
S0320L	5550
S0320R	5550
S0325G	5517
S0325H	5521
S0335G	5517
S0335H	5541
S0501	116
S-0501	116
S0501JS2	5453
S0501JS3	5453
S0501LS3	5412
S0501RS3	5412
S0503LS3	5412
S0503RS2	5453
S0503RS3	5412
S0506G	5514
S0506H	5491
S0506L	5461
S0506R	5461
S0508G	5514
S0508H	5491
S0508L	5461
S0508R	5461
S0510G	5514
S0510H	5491
S0510L	5550
S0510R	5550
S0515G	5514
S0515H	5501
S0515L	5550
S0515R	5550
S0520G	5514
S0520H	5521
S0520L	5550
S0520R	5550
S0525G	5517
S0525H	5521
S0535H	5541
S0702	139A
S0704	123A
S017446	159
S019843	159
S022010	123A
S022011	123A
S022012	159
S023735	159
S024428	123A
S024987	123A
S025232	123A
S025289	123A
S026094	234
S1-1	116
S1A	116
S1A06	116
S1A060	116
S1A3	137A
S1A60	116
S1AN6	5852
S1AN12	5872
S1AN15	5894
S1AN15R	5895
S1AN20	5914
S1AN20R	5915
S1AN31	5982
S1AN31R	5983
S1AN40	5982
S1AN40R	5983
S1AN55	6022
S1AN55R	6023
S1AR1	116
S1AR2	116

To Be Replaced	ECG Replacement
S1B	116
S1B01	116
S1B01-01	116
S1B01-02	116
S1B-01-02	116
S1B01-02	116
S1-B01-02	116
S1B01-04	506
S1B01-06	116
S1B01-06B	116
S1B02	116
S1B02-0	116(2)
S1B02-03C	156
S1B02-06CE	116
S1B02-06CRE	116
S1B02-C	116
S1B02-CR	116(2)
S1B02-CR1	178MP
S1B0101CR	116
S1B0102	116
S1B0201B	166
S1B0201CR	116
S1B-0306	125
S1BD1-02	116
S1BN15	5894
S1BN15R	5895
S1BN20	5914
S1BN20R	5915
S1BN31	5982
S1BN31R	5983
S1BN40	5982
S1BN40R	5983
S1BN55	6022
S1BN55R	6023
S1BR2	5852
S1BR5	5944
S1C	125
S1CN1	116
S1CR5	5944
S1D	125
S1D23-13	506
S1D23-15	506
S1D26	506
S1D30-13	506
S1D30-15	506
S1D50B851-A	177
S1D51C052-19	116
S1D51C169-1	116
S1D153	152
S1DR5	5944
S1ER5	5944
S1GR2	5801
S1M1	5800
S1M2	5800
S1P	506
S1R12B	142A
S1R13B	142A
S1R20	125
S1R60	116
S1R-80	116
S1R80	125
S1RB	166
S1RB10	166
S1RBA-10	116(4)
S1RBA(Bridge)	166
S1RC20	116
S1RC20R	116
S1RD10	156
S1-RECT-35	177
S1-RECT-102	116
S1-RECT-154	116
S1-RECT-155	116
S1-RECT-158	506
S1S20	109
S1SM-150-01	116
S1SM-150-02	116
S1SW-05-02	116
S1.5	116
S-1.5	116
S-1.5-0	116
S-1.5-0	116
S1.5-01	116
S-2	116
S2A06	116
S2A10	116
S2A20	5802
S2A30	5804
S2A40	5804
S2A50	5806
S2A60	5806
S2A80	5808
S2A100	5809
S2AN6	5874
S2AN12	5874
S2AO6	5800
S2AR1	116
S2AR2	116
S2C30	116
S2C40	116
S2C40A	116
S2CN1	5802
S2D153	196
S2E20	116
S2E60	116
S2E60-1	116
S2E100	125
S2GR2	5802
S2M1	5801
S2M2	5800
S2PB	166
S2V	125
S2VB	116(4)
S2VC	116(2)
S2VC10R	125
S3A05	5800

To Be Replaced	ECG Replacement
S3A06	116
S3A1	5801
S3A2	5802
S3A3	5804
S3A4	5804
S3A5	5806
S3A6	5806
S3A8	5808
S3A10	5809
S3AN6	5878
S3AN12	5878
S3AR1	116
S3CN1	5804
S3G4	125
S3GR2	5804
S3M1	5802
S3MX	116
S-3MX	116
S3V	116
S3V20	156
S3VC	116(2)
S3VCR	116
S4A06	116
S4A-1-A-3P	121
S4AN6	5878
S4AN12	5878
S4AR1	116
S4AR2	116
S4AR30	116
S-4C	506
S4CN1	5802
S4FN300	116
S4GR2	5802
S4M1	5804
S4VB10	5313
S5AN6	5882
S5AN12	5882
S5AR1	116
S5AR2	116
S5CN1	5804
S5GR2	5806
S5KV	540
S5M1	5804
S5S	116
S-5S	116
S5S	116(2)
S5SR	116
S-5SR	116
S5VB-10	5313
S6-3	166
S6-10	140A
S6-10A	140A
S6-10B	140A
S6-10C	140A
S6AN6	5882
S6AN12	5882
S6AR1	116
S6AR2	116
S6B-3-A-3P	121MP
S6BR2	156
S6GR2	5806
S6M1	5806
S7AN6	5886
S7AN12	5886
S7AR1	125
S7BR2	156
S8-01	5942
S8-06	156
S8-10	156
S8AN6	5886
S8AN12	5886
S8AR1	125
S8AR2	125
S8BR2	156
S8CN1	5808
S8GR2	5808
S8M1	5806
S8P-2-A-3P	102A
S9AN6	5890
S9AN12	5890
S9AR1	125
S9BR2	156
S9L-4-A-3P	102A
S10	116
S-10	116
S10A	116
S10AN6	5890
S10AN12	5890
S10AR1	125
S10AR2	125
S10B01-02	116
S10BR2	156
S10CN1	5808
S10GR2	5809
S10M1	5808
S10VB-10	5313
S10VB10	5313
S11	177
S-12	5802
S12-1-A-3P	123A
S-12A	5802
S12CN1	5808
S12M1	5809
S13	116
S13A	5804
S14	116
S14A	5804
S14A-1-3P	121
S-15	506
S15	116
S15A	116
S-15H	506
S15H	506
S16	116
S16A	116

To Be Replaced	ECG Replacement
S16B	116
S17	116
S-17	116
S17A	116
S-17A	116
S18	116
S18A	116
S18B	116
S19	116
S19A	116
S20	125
S20ND400	116
S20NH400	116
S21	116
S22	116
S22A	116
S23	116
S23A	116
S24	125
S26	116
S28	125
S30	116
S30-12	318
S31	116
S32(DIODE)	519
S32(RECT)	116
S33	116
S-34	506
S34	506
S35	116
S36	116
S37	5870
S38	5870
S39	5872
S-39T	121
S40	116
S40A	116
S-40T	121
S-40TB	121
S-41T	121
S-42T	121
S43	116
S-43T	121
S44	116
S46	116
S-46T	121
S47	116
S48	116
S-48T	121
S49	116
S-49T	121
S50	5886
S50-12	335
S50-28	317
S51	5886
S52	5874
S53	5878
S55	5882
S-55TB	126
S56	5882
S57	5886
S58	5886
S-58TB	121
S59	5890
S60(Axial)	116
S-60(Axial)	116
S60(Stud)	5890
S-60(Stud)	5890
S61	125
S62	125
S63	125
S65-1-A-3P	160
S65-2-A-3P	103A
S65-4-A-3P	101
S65A-1-3P	160
S65B-1-3P	126
S65C-1-3P	121
S66-1-A-3P	102A
S66-2-A-3P	102A
S66-3-A-3P	102A
S70-12	317
S-70T	126
S70T	160
S72	116
S73	116
S74-3-A-3P	100
S75	116
S77	116
S77A-1-3P	105
S77B-1-3P	121MP
S77C-1-3P	121
S79	116
S80-12	335
S-80T	126
S81	116
S82	116
S83	116
S84	116
S84A-1-3P	121
S85	116
S-85	184
S86	116
S-86	184
S-87TB	126
S87TB	160
S88B-1-3P	160
S88C-1-3P	100
S-88TB	126
S88TB	160
S91	116
S91-A	116
S91A	5800
S91B	5801

To Be Replaced	ECG Replacement
S91H	116
S92	116
S92-1-A-3P	105
S92-A	116
S92A	5800
S92H	116
S93	116
S93A	116
S93H	116
S93SE133	130
S93SE140	130MP
S93SE165	130
S94	116
S95	116
S100	125
S101	116
S102	116
S103	116
S104	116
S105	116
S105A	5800
S106	116
S106A	5454
S106A1	5454
S106B	5455
S106B1	5455
S106C	5456
S106C1	5456
S106D	5457
S106D1	5457
S106F	5453
S106F1	5453
S106Q	5452
S106Y	5452
S106Y1	5452
S107	116
S107A	5454
S107A1	5454
S107B	5455
S107B1	5455
S107C	5456
S107C1	5456
S107D	5457
S107D1	5457
S107F	5453
S107F1	5453
S107Q	5452
S107Y	5452
S107Y1	5452
S108	116
S110A	5809
S115	116
S122A	5462
S122B	5463
S122C	5465
S122D	5465
S122F	5461
S124AHB	280
S129	116
S130-138	161
S130-251	161
S133-1	123A
S169N	123A
S180	177
S191G	116
S200	116
S201	116
S202	116
S203	116
S204	116
S205	116
S206	116
S208	125
S210	125
S217	116
S218	116
S219	116
S220	116
S221	116
S222	116
S223	116
S224	116
S229	5802
S230	116
S232	116
S233	116
S234	116
S235	116
S236	5802
S238	116
S239	116
S240	116
S241	116
S243	116
S250	116
S251	116
S252	116
S253	116
S254	116
S255	116
S256	116
S257	125
S258	125
S260	125
S262	116
S-262	116
S305	130
S-305	130
S305A	130
S-305A	130
S305D	130
S-305-PD	130
S306A	175
S-310E	152
S-320F	129

To Be Replaced	ECG Replacement
S353	130
S354	175
S356	130
S-356	130
S-371	160
S400	5878
S409F	128
S410	5872
S411	5874
S413	5878
S415	5882
S417	5886
S420	5872
S421	5874
S423	5878
S425	5882
S427	5886
S428	116
S431	116
S-437	129
S-437F	129
S500	106
S-500	125
S-500B	116
S500B	5804
S-500C	116
S500C	5804
S501	106
S502	177
S502A	177
S502B	177
S504-0	129
S506	177
S506A	177
S506B	177
S509	177
S509A	177
S509B	177
S520	159
S-522	192
S600	5882
S608	159
S684	160
S685	102A
S686	102A
S687	102A
S715	186
S750	125
S750C	125
S800	5886
S801	186
S808	156
S855	120
S-873TB	160
S-874TB	160
S913	118
S926	118
S953	177
S1000	5848
S1001JS2	5454
S1001JS3	5454
S1001LS3	5413
S1001RS3	5413
S1003LS3	5413
S1003RS2	5454
S1003RS3	5413
S1006G	5514
S1006H	5491
S1006L	5462
S1006R	5462
S1008G	5514
S1008H	5491
S1008L	5462
S1008R	5462
S1009	108
S1010	5801
S1010G	5514
S1010H	5491
S1010L	5552
S1010R	5552
S1015G	5514
S1015H	5502
S1015L	5552
S1015R	5552
S1016	123A
S1019	108
S1020	5802
S1020G	5514
S1020H	5522
S1020L	5552
S1020R	5552
S1025G	5517
S1025H	5522
S1030	5803
S1035H	5542
S1037	108
S-1037	108
S1040	5804
S1041	107
S-1041	108
S1041-16GN	107
S1044	108
S1047	159
S1050	5805
S1058	108
S-1058	108
S1059	108
S-1059	108
S1060	5806
S-1060	108
S1061	123A
S-1061	123A
S1062	108
S-1062	108
S1065	123A

To Be Replaced	ECG Replacement
S-1065	123A
S1066	123A
S-1066	123A
S1068	123A
S-1068	123A
S1069	123A
S1070	5808
S1074	123A
S1074R	123A
S1076	108
S1078	108
S-1078	108
S1079	108
S-1079	108
S1080(Diode)	5808
S1080(Rectifier)	5808
S1080(Transistor)	123A
S1090	5809
S1122	107
S1126	107
S1128	123A
S-1128	123A
S1142	108
S1143	123A
S-1143	123A
S1153	108
S-1153	108
S1201F	125
S1202	157
S1210	5801
S1211N	133
S1212N	133
S1213N	133
S1214N	133
S1215N	133
S1216N	133
S1220	5802
S1221	123A
S-1221	123A
S1221A	123A
S-1221A	123A
S1221N	133
S1222N	133
S1223N	133
S1224N	133
S1225N	133
S1226	123A
S1226N	133
S1227	108
S-1227	108
S1230	5803
S1231N	133
S1232N	133
S1233N	133
S1234N	133
S1235N	133
S1236N	133
S1240	5804
S1241	123A
S1241N	132
S1242	123A
S1242N	132
S1243	123A
S1243N	116
S1245	123A
S-1245	123A
S1250	5805
S1260	5806
S1270	5808
S1272	123A
S1276	108
S-1276	108
S1280	5808
S1286	161
S-1286	108
S1290	5809
S1296	108
S-1296	108
S1298	171
S1307	123A
S1308	107
S1309	123A
S1313	108
S1316	108
S-1316	108
S1317	108
S-1317	108
S1318	108
S-1318	108
S1331	123A
S1331N	123A
S1331W	123A
S-1331W	123A
S1332	126
S1348	102A
S-1348	102A
S1349	102A
S-1349	102A
S1350	159
S1350A	159
S1360	108
S-1360	108
S1361	108
S-1361	108
S1362	108
S-1362	108
S1363	123A
S-1363	123A
S1364	123A
S-1364	123A
S1366	154
S1367	159
S-1367A	159
S1368	128
S1369	123A

To Be Replaced	ECG Replacement
S1373	123A
S1374	123A
S1384	110
S1403	123A
S-1403	123A
S1405	123A
S1407	154
S1408	108
S-1408	108
S1409	108
S-1409	108
S1419	123A
S1420	123A
S1428	177
S1429-3	123A
S1430	129
S1431	129
S1432	123A
S1443	123A
S1453	123A
S1475	123A
S1476	123A
S1487	123A
S1502	123A
S1510	123A
S-1512	123A
S1514	128
S1516	128
S1517	128
S1520	129
S1523	128
S1525	128
S1526	123A
S1527	123A
S1529	123A
S1530	123A
S-1533	123A
S-1556-2	121
S1556-2	121
S1559	123A
S-1559	123A
S1568	123A
S1570	123A
S1600	116
S1619	123A
S1620	123A
S1629	123A
S1636	108
S1639	102A
S-1639	102A
S1640	160
S-1640	160
S1642	128
S1644	128
S1671	128
S1672	158
S1674	108
S1674A	108
S1682	108
S1689	128
S1691	130
S1692	130
S1697	123A
S1698	129
S1761	123A
S1761A	123A
S1761B	123A
S1761C	123A
S1762	128
S1764	123A
S1765	123A
S1766	123A
S1768	123A
S1769	154
S1770	123A
S1772	123A
S1773	128
S1777	128
S1784	123A
S1785	123A
S1801-02	116
S1835	123A
S1863	129
S1864	128
S1865	130
S1871	123A
S1874	128
S1889	159
S1891	123A
S1891A	123A
S1891B	123A
S1897	107
S1905	130
S1905A	130
S1907	130
S1948-008	159
S1955	123A
S1983	129
S1990	234
S1993	123A
S2001JS2	5455
S2001JS3	5455
S2001LS3	5414
S2001RS3	5414
S2002	161
S2003-1	130
S2003LS3	5414
S2003RS2	5455
S2003RS3	5414
S2005	5892
S2006G	5514
S2006H	5492
S2006L	5463
S2006R	5463
S2006G	5514

To Be Replaced	ECG Replacement
S2008H	5492
S2008L	5463
S2008R	5463
S2010	5894
S2010G	5514
S2010H	5492
S2010L	5552
S2010R	5552
S2015	5896
S2015G	5514
S2015H	5504
S2015L	5552
S2015R	5552
S2020	5896
S2020G	5514
S2020H	5524
S2020L	5552
S2020R	5552
S2025	5898
S2025G	5517
S2025H	5524
S2030	5898
S2034	123A
S2035	5900
S2035G	5517
S2035H	5543
S2040	5900
S2041	153
S-2041-8661	9944
S2042	152
S2043	123A
S2044	123A
S2045	5902
S2050	5902
S2059	124
S2060	5904
S2060A	5454
S2060B	5455
S2060C	5456
S2060F	5461
S2060Q	5461
S2060Y	5461
S2061A	5454
S2061B	5455
S2061C	5456
S2061D	5457
S2061F	5461
S2061Q	5461
S2061Y	5461
S2062A	5454
S2062B	5455
S2062C	5457
S2062F	5453
S2062Q	5452
S2062Y	5452
S-2064-G	519
S2070	5908
S2080	5908
S2087G	177
S2090	5910
S2091	159
S2105	5912
S2110	5914
S2115	5916
S2117	129
S2118	128
S2120	5916
S2121	123A
S2122	123A
S2123	123A
S2124	123A
S2125	5918
S2128	159
S2129	159
S2130	5918
S2131	107
S2132	107
S2133	107
S2134	107
S2135	5920
S2140	5920
S2140(Rectifier)	5920
S2145	5922
S2150	5922
S2159	108
S2160	5924
S2170	5928
S2171	123A
S2172	123A
S2180	5928
S2190	5932
S-2200-1135	74H04
S2209	128
S2224	108
S2225	123A
S2241	130
S2274	129
S2321	175
S2368	129
S2369	128
S2370	129
S2371	128
S2392	130
S2397	123A
S2398C	129
S2400	128
S2400A	128
S2400B	128
S2401	128
S2401A	128
S2401B	128
S2401C	128
S2402	128
S2402A	128
S2402B	128

To Be Replaced	ECG Replacement
S2402C	128
S2403B	130
S2403C	130
S2427	128
S2486	175
S2487	128
S2525	159
S2526	128
S2527	175
S2530	283
S2544	236
S2581	123A
S2582	123A
S2590	123A
S2593	123A
S2610D	5507
S2610M	5529
S2617	108
S2635	123A
S2636	123A
S2645	159
S2645A	159
S2648	128
S2710B	5513
S2710D	5513
S2710M	5513
S2741	130
S2771	129
S2794	128
S2800A	5462
S2800B	5463
S2800C	5465
S2800D	5465
S2800F	5461
S2935	123A
S2944	123A
S2984	123A
S2985	123A
S2986	154
S2988	159
S2988A	159
S2989	123A
S2991	129
S2992	128
S2993	129
S2994	129
S2995	129
S2996	123A
S2997	123A
S2998	123A
S2999	123A
S3001	195A
S3002	154
S3004	159
S3004-1715	137A
S3004-1716	177
S3004-1718	137A
S3006(HEP)	320
S3008	311
S3008(MOT)	311
S3010(HEP)	282
S3011A	605
S3011(HEP)	282
S3012	129
S3013	311
S3013(MOT)	311
S3014(HEP)	311
S3016	601
S-3016	601
S-3016R	177
S3016R	601
S3019	108
S3020	108
S3021(HEP)	191
S3022(HEP)	191
S3023(HEP)	210
S3024(HEP)	210
S3025(HEP)	210
S3026(HEP)	188
S3027(HEP)	211
S3028(HEP)	211
S3029(HEP)	211
S3030G	109
S3030(HEP)	189
S3031(HEP)	189
S3032(HEP)	189
S3033	154
S3034	154
S3035	154
S3042(HEP)	128
S3043(HEP)	322
S3045(HEP)	235
S3049(HEP)	295
S3052(HEP)	325
S3072	601
S3072C	177
S3073	610
S3105	5980
S3110	5982
S3115	5986
S3120	5986
S3125	5988
S3130	5988
S3135	5990
S3140	5990
S3145	5992
S3150	5992
S3160	5994
S3170	5998
S3180	5998
S3190	6002
S3205	5980
S3210	5982
S3215	5986
S3220	5986

To Be Replaced	ECG Replacement
S3225	5988
S3230	5988
S3235	5990
S3240	5990
S3245	5992
S3250	5992
S3260	5994
S3270	5998
S3280	5998
S3290	6002
S3386	129
S3405	6020
S3410	6022
S3415	6026
S3420	6026
S3425	6030
S3430	6030
S3435	6034
S3440	6034
S3445	6038
S3450	6038
S3460	6040
S3470	6042
S3480	6042
S3490	6044
S3577G	109
S3603G	109
S3605	6050
S3610	6050
S3615	6054
S3620	6054
S3625	6058
S3630	6058
S3635	6060
S3639	159
S3640	6060
S3640A	159
S3645	6064
S3650	6064
S3655	159
S3655A	159
S3660	6064
S3670	6068
S3680	6068
S3690	6072
S3700B	230
S3700D	230
S3700M	230
S3702S	231
S3702SF	231
S3703SF	230
S3704A	231
S3704B	231
S3704D	231
S3704M	231
S3704S	231
S3705M	230
S3706E	231
S3771	130
S3776B	109
S3800S	308
S3800SF	310
S3838GA	109
S3885G	109
S4001	116
S4001JS2	5457
S4001JS3	5457
S4002	161
S4003RS2	5457
S4003RS3	5457
S4006G	5515
S4006H	5494
S4006L	5465
S4006R	5465
S4008G	5515
S4008H	5494
S4008L	5465
S4008R	5465
S4010G	5515
S4010H	5494
S4010L	5554
S4010R	5554
S4015G	5515
S4015H	5507
S4015L	5554
S4015R	5554
S4020G	5515
S4020H	5527
S4020R	5554
S4025G	5518
S4025H	5527
S4035G	5518
S4035H	5545
S4248	102A
S4249	159
S5000	173BP
S5001(HEP)	182
S5002(HEP)	183
S5003(HEP)	184
S5004(HEP)	182
S5005(HEP)	183
S5006(HEP)	185
S5007(HEP)	185
S5008(HEP)	183
S5009(HEP)	183
S5010(HEP)	183
S5011(HEP)	124
S5012(HEP)	175
S5013(HEP)	129
S5014(HEP)	128
S5015(HEP)	157
S5018(HEP)	218
S5019(HEP)	175
S5020(HEP)	162
S5021	161

To Be Replaced	ECG Replacement
S5022(HEP)	159
S5023(HEP)	129
S5024(HEP)	154
S5025(HEP)	154
S5026(HEP)	154
S5089-A	116
S5105	6354
S5105R	6355
S5110	6354
S5110R	6355
S5115	6354
S5115R	6355
S5120	6354
S5120R	6355
S5125	6354
S5125R	6355
S5135	6354
S5135R	6355
S5140	6354
S5140R	6355
S5145	6356
S5145R	6357
S5150	6356
S5150R	6357
S5160	6356
S5160R	6357
S5170	6358
S5170R	6359
S5180	6358
S5180R	6359
S5190	6358
S5190R	6359
S5228B	5067A
S5229B	5068A
S5230B	5069A
S5231B	5116A
S5232B	136A
S5233B	5070A
S5234B	137A
S5235B	5071A
S5236B	138A
S5237B	5072A
S5238B	5073A
S5239B	139A
S5240B	140A
S5241B	5074A
S5242B	142A
S5243B	143A
S5244B	144A
S5245B	145A
S5246B	5075A
S5247B	5076A
S5248B	5077A
S5249B	5078A
S5250B	5079A
S5251B	5080A
S5252B	5081A
S5253B	5082A
S5254B	146A
S5255B	5083A
S5256B	5084A
S5257B	147A
S5258B	5085A
S5259B	5086A
S5260B	5087A
S5261B	5088A
S5262B	5089A
S5263B	5090A
S5264B	5091A
S5265B	149A
S5266B	5092A
S5267B	5093A
S5268B	150A
S5269B	5094A
S5270B	5095A
S5271B	5096A
S5272B	151A
S5273B	5097A
S5274B	5098A
S5275B	5099A
S5276B	5100A
S5277	116
S5277B	5101A
S-5277B	116
S5278B	5102A
S5279B	5103A
S5280B	5104A
S5281B	5105A
S5295G	506
S5295J	506
S5305	6354
S5305R	6355
S5310	6354
S5310R	6355
S5315	6354
S5315R	6355
S5320	6354
S5320R	6355
S5325	6354
S5325R	6355
S5327E	108
S5328E	108
S-5328E	108
S5330	6354
S5330R	6355
S5335	6354
S5335R	6355
S5340	6354
S5340R	6355
S5345	6356
S5345R	6357
S5350	6356
S5350R	6357
S5360	6356
S5360R	6357

To Be Replaced	ECG Replacement
S5370	6358
S5370R	6359
S5380	6358
S5380R	6359
S5390	6358
S5390R	6359
S5472	157
S5670E	108
S-5670-E	108
S6005	116
S6006G	5516
S6006H	5496
S6008G	5516
S6008H	5496
S6010G	5516
S6010H	5496
S6010L	5556
S6010R	5556
S6015G	5516
S6015H	5529
S6015L	5556
S6015R	5556
S6020G	5516
S6020H	5529
S6020R	5556
S6025G	5519
S6025H	5529
S6035G	5519
S6035H	5547
S6080A	231
S6080B	231
S6089	230
S6200A	5514
S6200B	5514
S6200D	5515
S6200M	5516
S6413M	5547
S6431M	5547
S6801	123A
S6804	128
S7000(HEP)	181
S7001(HEP)	180
S7002(HEP)	130
S7003(HEP)	219
S7004(HEP)	130
S7054	541
S7502	5405
S7503	5405
S8010L	5558
S8010R	5558
S8015H	5531
S8015L	5558
S8015R	5558
S8020H	5531
S8020L	5558
S8020R	5558
S8025H	5531
S8660	184
S9001(HEP)	6402
S9002(HEP)	6409
S9100	172A
S9101	253
S9101(HEP)	253
S9101(IC)	705A
S9102	257
S9120(HEP)	232
S9121	254
S9122	258
S9140	243
S9140(HEP)	243
S9140(IC)	705A
S9141	244
S9141(HEP)	244
S9141(IC)	705A
S9631	123A
S10100	5809
S10110	506
S10120	506
S10149	116(4)
S10153	184
S12020-04	152
S12100	5809
S12110	506
S12120	506
S12130	506
S12140	506
S13551M	309K
S15649	123A
S15650	161
S15657	161
S15658	161
S15659	161
S15660	128
S17074	113
S17862	154
S17900	128
S18000	128
S18100	159
S18200	128
S19386	128
S20100	5910
S20445	195A
S-20446	195A
S20446	237
S21100	5932
S21271	109
S-21271	109
S21520	175
S21549	128
S21648	107
S22543	123A
S24226	159
S24591	123A
S24592	199
S24594	129

To Be Replaced	ECG Replacement
S24596	123A
S24597	129
S24598	128
S24612	129
S24612A	129
S24614	128
S24615	129
S24616	128
S25805	108
S27233	128
S27604	161
S29445	123A
S31100	6002
S32100	6002
S32669	108
S33291	124
S33886	129
S33886A	129
S34100	6044
S34540	123A
S35486	180
S35487	181
S36100	6072
S36999	123A
S40204	161
S40205	154
S40545	107
S51100	6358
S51100R	6359
S53100	6358
S53100R	6359
S67794	124
S67809	121
S88569	501A
S88570	500A
S88571	500A
S88576	112
S95101	160
S-95101	126
S95102	160
S-95102	126
S95103	160
S-95103	126
S95104	160
S95106	160
S95125	108
S-95125	108
S95125A	108
S-95125A	108
S95126	108
S-95126	108
S95126A	108
S-95126A	108
S95201	102A
S-95201	102A
S95202	123A
S-95202	103A
S95203	102A
S95204	102A
S-95204	102A
S95206	102A
S95207	102A
S95214	102A
S95218	102A
S95252	157
S95253	121
S-95253	121
S95253-1	121
S-95253-1	121
S99101	160
S99102	160
S99103	160
S99104	160
S99201	102A
S99203	102A
S99218	102A
S99252	157
S326690	108
S413796	102
S1948008	159
S1977634	130
S2041635	102A
S2042634	103A
S8660121-808	184
S-05	116
SA1M1	5801
SA2	116
SA-2	156
SA-2A	156
SA2B	116
SA-2B	156
SA-2C	156
SA2M1	5802
SA2Z	125
SA-2Z	156
SA3B	116
SA3M1	5804
SA5M1	5806
SA6M1	5806
SA7	101
SA-7	101
SA8-1-A-3P	160
SA8M1	5808
SA10M1	5809
SA15V	102A
SA29	158
SA33	102A
SA33BRN	102A
SA33RED	102A
SA50	159
SA50A	159
SA51	159
SA52	159
SA52A	159
SA52AC	159

To Be Replaced	ECG Replacement
SA52B	159
SA52BC	159
SA53	159
SA53A	159
SA54	159
SA55	159
SA55A	159
SA56	159
SA56A	159
SA70	159
SA70A	159
SA102	126
SA128	102A
SA128-1	102A
SA197	102A
SA197-1	102A
SA197-2	102A
SA197-3	102A
SA204	102A
SA205BLU	102A
SA205BRN	102A
SA205GRN	102A
SA205ORN	102A
SA205RED	102A
SA205VIO	102A
SA205WHT	102A
SA205YEL	102A
SA240	102A
SA310	159
SA310A	159
SA311	159
SA311A	159
SA312	159
SA312A	159
SA313	159
SA314	159
SA314A	159
SA315	159
SA315A	159
SA316	159
SA316A	159
SA318-2	158
SA318-3	158
SA354B	103
SA410	159
SA410A	159
SA411	159
SA411A	159
SA412	159
SA412A	159
SA413	159
SA413A	159
SA414	159
SA414A	159
SA415	159
SA415A	159
SA416	159
SA416A	159
SA495	106
SA495A	106
SA496	106
SA496A	106
SA496B	106
SA529	102A
SA534A	987
SA534F	987
SA537	106
SA538	106
SA539	106
SA540	106
SA565	102A
SA646	102A
SA681	158
SA723CN	923D
SA821	137A
SA821A	137A
SA823	137A
SA823A	137A
SA825	137A
SA825A	137A
SA827	137A
SA827A	137A
SA829	137A
SA829A	137A
SA853	102A
SA3993	543
SA3993A	543
SA-93792	177
SA-93794	139A
SA-607010M	4011B
SA-607012CK	4081B
SA-607012T	4017B
SAB1044	161
SAB3469	161
SAC40	106
SAC40A	106
SAC40B	106
SAC42	106
SAC42A	106
SAC42B	106
SAC44	106
SAC203	56006
SAE-1	280
SAE-2	281
SAJ210AX7	2040
SAJ72155	1076
SAJ72156	1091*
SAJ72157	1046
SAJ72158	1047
SAJ72159	1077
SAJ72160	1086*
SAJ72161	1089*
SAJ72162	1048
SATCHZ339	108
SB01	116

To Be Replaced	ECG Replacement
SB01-02	177
SB0319	152
SB0419	218
SB-1	506
SB1-01-04	116
SB1Z	5800
SB-1Z	116
SB-2	506
SB-2B	506
SB2C	506
SB-2C	506
SB2C-GL	506
SB-2(Centering)	507
SB-2CGL	506
SB-2CH	506
SB-2GL	506
SB-2T	506
SB-3	116
SB-3-02	116
SB-3F	156(4)
SB-3F01	116
SB-3N	116
SB5	130
SB6	130
SB7	130
SB100	126
SB-100	126
SB101	160
SB102	160
SB103	160
SB168	102A
SB169	102A
SB200	126
SB302	116
SB309A	166
SB-309A	116
SB309C	166
SB-309C	116
SB315	116
SB332	116
SB333	116
SB393	116
SB821	137A
SB821A	137A
SB823	137A
SB823A	137A
SB825	137A
SB825A	137A
SB827	137A
SB827A	137A
SB829	137A
SB829A	137A
SB-1000	125
SB5122	126
SBR05	166
SBR12	166
SBR22	167
SBR42	168
SBR62	169
SBR82	170
SBR102	170
SBR-260	116
SC05	116
SC05E	116
SC0515	5940
SC1	116
SC2	116
SC4	116
SC6	117
SC-6	109
SC-7	5457
SC-7(Philco)	5457
SC7(Philco)	5457
SC8	125
SC8A	125
SC10	125
SC10A	125
SC12	102A
SC-12	102A
SC12(diode)	177
SC-15	613
SC-16	116
SC-20	613
SC20	614
SC23-3	116
SC23-9	116
SC-29	113
SC35A	5673
SC35B	5673
SC35D	5675
SC35F	5673
SC40A	5663
SC40B	5673
SC40B-1	5675
SC40D	5675
SC40E	5676
SC40F	5661
SC43	100
SC44	100
SC45	102A
SC45A	5675
SC45B	5673
SC45B13	5673
SC45D	5675
SC45D13	5675
SC45E	5676
SC45E13	5676
SC45F	5675
SC46	100
SC50A	5675
SC50B	5673
SC50B13	5673
SC50D	5675
SC50D13	5675
SC50E	5676

To Be Replaced	ECG Replacement
SC50E13	5676
SC50F	5675
SC54	109
SC56	103A
SC-56	103A
SC60A	5682
SC60A13	5682
SC60B	5683
SC60B13	5683
SC60C	5684
SC60C13	5684
SC60D	5685
SC60D13	5685
SC60E	5685
SC60E13	5685
SC60F	5681
SC60F13	5681
SC63	102A
SC-63	102A
SC65	123A
SC-65	123A
SC66	102A
SC-66	102A
SC68	102A
SC-68	102A
SC69	102A
SC-69	102A
SC70	121
SC-70	121
SC71	160
SC-71	160
SC72	160
SC-72	160
SC73	102A
SC-73	102A
SC74	160
SC-74	160
SC78	160
SC-78	160
SC79	160
SC-79	160
SC80	160
SC-80	160
SC91	139A
SC110	116
SC-110	116
SC115	5942
SC116P1	725
SC141A	56004
SC141A1	56004
SC141A2	56004
SC141A3	56004
SC141A4	56004
SC141A5	56004
SC141A6	56004
SC141B	56004
SC141B1	56004
SC141B2	56004
SC141B3	56004
SC141B4	56004
SC141B5	56004
SC141B6	56004
SC141C	56006
SC141C1	56006
SC141C2	56006
SC141C3	56006
SC141C4	56006
SC141C5	56006
SC141C6	56006
SC141D	56006
SC141D1	56006
SC141D2	56006
SC141D3	56006
SC141D4	56006
SC141D5	56006
SC141D6	56006
SC141E	56008
SC141E1	56008
SC141E2	56008
SC141E3	56008
SC141E4	56008
SC141E5	56008
SC141E6	56008
SC141F	56004
SC141F1	56004
SC141F2	56004
SC141F3	56004
SC141F4	56004
SC141F5	56004
SC141F6	56004
SC146A	5632
SC146A1	5632
SC146A2	5632
SC146A3	5632
SC146A4	5632
SC146A5	5632
SC146A6	5632
SC146B	5633
SC146B1	5633
SC146B2	5633
SC146B3	5633
SC146B4	5633
SC146B5	5633
SC146B6	5633
SC146C	5634
SC146C1	5634
SC146C2	5634
SC146C3	5634
SC146C4	5634
SC146C5	5634
SC146D	5635
SC146D1	5635
SC146D2	5635
SC146D3	5635
SC146D4	5635

@, * — See special notes on inside back cover.

To Be Replaced	ECG Replacement
SC146D5	5635
SC146D6	5635
SC146E	5636
SC146E1	5636
SC146E3	5636
SC146E4	5636
SC146E5	5636
SC146E6	5636
SC146F	5631
SC146F1	5631
SC146F2	5631
SC146F3	5631
SC146F4	5631
SC146F5	5631
SC146F6	5631
SC149B	56004
SC149D	56006
SC149E	56008
SC149M	56008
SC151B	56004
SC151D	56006
SC151E	56008
SC151M	56008
SC215	5942
SC240B	5673
SC240B13	5673
SC240D	5675
SC240D13	5675
SC240E	5676
SC240E13	5676
SC245B	5673
SC245B13	5673
SC245D	5675
SC245D13	5677
SC245E	5676
SC245E13	5676
SC250B	5673
SC250B13	5673
SC250D	5675
SC250D13	5675
SC250E	5676
SC250E13	5676
SC265D2	5695
SC305	116
SC350	123A
SC365	129
SC400Y	124
SC441	198
SC5150P	755
SC609	237
SC727	124
SC-727	124
SC741T	941
SC777	124
SC785	123
SC786	128/411
SC821	137A
SC821A	137A
SC823	137A
SC823A	137A
SC825	137A
SC825A	137A
SC827	137A
SC827A	137A
SC829	137A
SC829A	137A
SC832	123A
SC-832	123A
SC842	123A
SC843	129
SC843 (T.I.)	154
SC1001	123A
SC1007	160
SC1010	123A
SC-1016	519
SC1042	295
SC1168G	123A
SC1168H	123A
SC1182	914
SC1227F	108
SC1227G	108
SC1229E	128
SC1229G	123A
SC1294H	129
SC1414	116
SC1431	116
SC1431(GE)	177
SC1611	464
SC1612	464
SC1613	464
SC1614	464
SC1631	116
SC1631(GE)	116
SC1940G	704
SC2914	725
SC2914P	725
SC4004	124
SC-4004	124
SC4010	123A
SC4044	123A
SC-4044	123A
SC4073	103A/410
SC4116	116
SC4131	128/411
SC-4131	124
SC4131-1	128/411
SC-4131-1	124
SC4133	184
SC4167	128/411
SC-4167	124
SC4244	128/411
SC-4244	123A
SC4274	131
SC4303	152
SC4303-1	152

To Be Replaced	ECG Replacement
SC4303-2	152
SC4308	152
SC5116L	725
SC5116P	725
SC5118P	720
SC5150P	735
SC5150R	735
SC5170	993
SC5172P	719
SC5175G	941
SC5177P	718
SC5182P	720
SC5199P	718
SC5204P	798
SC5221P	755
SC5245P	748
SC5279P	779-1*
SC5282P	817
SC5425P	748
SC5740PQ	722
SC5741P	720
SC5743P	722
SC5747	799
SC8705P	722
SC8707	782
SC8707P	782
SC8718	748
SC8744	748
SC9314P	718
SC9426P	722
SC9430P	747
SC9431P	749
SC9436P	712
SC9578P	814
SC9961P	9917
SC9963P	9924
SC9964P	9976
SC9965P	9989
SC17063L	725
SC20575	703A
SC42502P	991
SC42663P	991
SC74087P	831
SCA05	116
SCA1	116
SCA2	116
SCA3	116
SCA4	116
SCA5	116
SCA6	116
SCA8	125
SCA10	125
SCA45A	513
SCA-45A	513
SCA1103	116
SCBA05	5322
SCBA-1	5322
SCBA1	5322
SCBA-2	5322
SCBA2	5322
SCBA-4	5324
SCBA4	5324
SCBA-6	5326
SCBA6	5326
SCBR05F	125
SCBR1F	125
SCBR6	156
SCBR6F	125
SCBR10	156
SCD-1062013	9158
SCD T320	130
SCD T322	123A
SCD T326	159
SCD T330	152
SCD T334	153
SCDT323	123A
SCE1	116
SCE2	116
SCE4	116
SCE6	116
SCE8	125
SCE10	125
SCF40501	755
SCI44191005	128
SCI444103053	128
SCI444204037	129
SCI444291004	129
SCL-11Z	544
SCL-11Z2B	544
SCL-12	543
SCL4000AE	4000
SCL4001AE	4001B
SCL4002AE	4002B
SCL4006	4006B
SCL4008	4008B
SCL4011AE	4011B
SCL4012AE	4012B
SCL4013AE	4013B
SCL4015AE	4015B
SCL4017AE	4017B
SCL4018	4018B
SCL4019AE	4019B
SCL4020AE	4020B
SCL4022	4022B
SCL4023AE	4023B
SCL4024AE	4024B
SCL4025AE	4025B
SCL4027AE	4027B
SCL4028AE	4028B
SCL4029AE	4029B
SCL4030AE	4030B
SCL4034	4034B
SCL4035	4035B
SCL4040AE	4040B
SCL4044	4044B

To Be Replaced	ECG Replacement
SCL4046	980
SCL4053	4053B
SCL4060	4060B
SCL4063	4063B
SCL4066	4066B
SCL4071AE	4071B
SCL4072	4072B
SCL4073	4073B
SCL4075	4075B
SCL4076	4076B
SCL4081AE	4081B
SCL4093	4082B
SCL4099B	4099B
SCL4510	4510B
SCL4514	4515B
SCL4515	4515B
SCL4516	4516B
SCL4518AE	4518B
SCL4520AE	4520B
SCMW-12	545
SCMW-13	546
SCO5	116
SCO5E	116
SCP5E	116
SCR-01	5481
SCR-01-B	5481
SCR01C	5481
SCR-02	5483
SCR-02-C	5483
SCR02C	5843
SCR-03	5501
SCR-03-C	5521
SCR-04	5504
SCR-04-C	5524
SCR04C	5504
SCR15	5401
SCR55	5481
SCR102	5502
SCR102(Elcom)	5522
SCR104	5444
SCR104(Elcom)	5423
SCR108	5402
SCR108(Elcom)	5402
SCR118	5504
SCR118(Elcom)	5482
SCR122(Elcom)	5514
SCR200	5404
SCR202	5504
SCR202(Elcom)	5524
SCR204	5444
SCR207	5504
SCR207(Elcom)	5492
SCR208	5504
SCR208(Elcom)	5483
SCR218	5404
SCR218(Elcom)	5404
SCR222(Elcom)	5514
SCR255	5541
SCR402	5507
SCR402(Elcom)	5527
SCR404(Elcom)	5457
SCR408	5507
SCR408(Elcom)	5485
SCR422(Elcom)	5515
SCR502	5501
SCR502(Elcom)	5521
SCR505	5486
SCR505(Elcom)	5486
SCR508	5501
SCR508(Elcom)	5481
SCR520	5483
SCR538	5444
SCR604(Elcom)	5448
SCR605(Elcom)	5513
SCR608(Elcom)	5487
SCR613	5444
SCR635(Elcom)	5547
SCR805(Elcom)	231
SCR816(Elcom)	5531
SCR1079K-8	5466
SCR2520	5543
SCR5020	5402
SCT1	125
SCT2	125
SCT3	125
SCT4	125
SCT5	125
SD-0033	5071A
SD-02	116
SD05	116
SD07	116
SD020	110
SD040	116
SD1	116
SD1	116
SD-1	506
SD1-1	116
SD1-11	506
SD-1-30DA	506
SD1-211B	116
SD-1-211B	116
SD-1-211C	116
SD1-211C	116
SD1A	116
SD-1A	116
SD-1A4F	506
SD-1AHF	507
SD-1AUF	177
SD-1BHF	506
SD-1(BOOST)	506
SD1C	125
SD-1C	506
SD-1C-4F	116
SD-1C-UF	116
SD-1CUF	116

To Be Replaced	ECG Replacement
SD1CUF	116
SD1DM-4	116
SD-1HF	116
SD1HF	116
SD1L	116
SD-1L	116
SD-1LA	116
SD1LA	116
SD-1N60	109
SD-1N60S	109
SD-1S1555	177
SD-1UF	116
SD-1VHF	506
SD1X	116
SD1Y	116
SD-1Z	116
SD1Z	116
SD1ZHF	116
SD2	125
SD-2	116
SD2A	116
SD2B	116
SD2C	125
SD-2N5062	5402
SD4	116
SD4(DUAL)	113
SD5	116
SD-5	177
SD5(DUAL)	114
SD-5 (Philco)	177
SD6	116
SD-6	135A
SD-6AUF	125
SD6(dual)	5802
SD7	125
SD-7	5808
SD7	178MP
SD-7 (Philco)	178MP
SD8	125
SD-8 (Philco)	139A
SD-8(Rectifier)	5808
SD-8(Zener)	5072A
SD-11	5077A
SD-12	109
SD12	109
SD12B	109
SD12E	109
SD12M	109
SD12(Philco)	177
SD-13	116
SD13	116
SD-13(Philco)	109
SD14	109
SD-14	109
SD15	109
SD-15	139A
SD16	109
SD-16	109
SD-16A	116
SD-16D	116
SD18	116
SD-18	116
SD-19	166
SD21A	109
SD-22	506
SD23	116
SD-27	139A
SD27	139A
SD30-13	506
SD31	5080A
SD-31	5079A
SD-32	136A
SD32	5011A
SD-33	143A
SD33	142A
SD34	109
SD-34	177
SD39	614
SD42	5071A
SD-43	177
SD45	116
SD-46	109
SD46	109
SD-46	109
SD46	109
SD-46	109
SD-46-2	109
SD46-2	109
SD46(4)	110
SD46R	110
SD49	5071A
SD-49	5071A
SD-51	112
SD51	112
SD53	142A
SD-56	109
SD56	109
SD60	109
SD-60	109
SD-80	116
SD80	116
SD82	112
SD82A	112
SD-82A	112
SD82AG	112
SD-91	116
SD91	5800
SD-91A	116
SD91A	5802
SD-91S	116
SD91S	5802
SD-92	116
SD92	5802
SD-92A	116
SD92A	5802

To Be Replaced	ECG Replacement
SD-92S	116
SD92S	5802
SD-93	116
SD93	5804
SD-93A	116
SD93A	5804
SD93S	116
SD-94	116
SD94	5804
SD-94A	116
SD94A	5804
SD-94AB	116
SD94AB	116
SD94B	116
SD94S	116
SD-95	116
SD95	116
SD-95A	116
SD95A	116
SD96	116
SD96A	116
SD96S	116
SD98	125
SD98A	125
SD98S	125
SD100	177
SD-101	116
SD101	5804
SD102	116
SD103	116
SD104	116
SD105	139A
SD109	123A
SD-109	123A
SD110	177
SD-110	177
SD111	612
SD115	612
SD-150	109
SD165	177
SD-201	116
SD201	116
SD202	116
SD282A	112
SD345	152
SD-404	112
SD445	153
SD470	116
SD500	177
SD500C	116
SD600	177
SD600C	116
SD-630	177
SD630	177
SD632	139A
SD-632	139A
SD632(10)	139A
SD692	247
SD701-02	177
SD709C	909
SD800	125
SD910	125
SD910A	125
SD910S	125
SD950	116
SD974	177
SD1014	350
SD1016	355
SD1018	320
SD1023	186
SD1069	350
SD1074	318
SD1077	329
SD1080	346
SD1087	365
SD1088	366
SD1089	367
SD1089A	367
SD1101	116
SD1102	116
SD1103	116
SD1104	116
SD1124	352
SD1127	341
SD1131	361
SD1134	362
SD1135	363
SD1136	364
SD1144	362
SD1145	363
SD1146	364
SD1167	337
SD1168	338
SD1169	339
SD1200	311
SD1212-4	235
SD1214-4	235
SD1216	351
SD1218	350
SD1224	359
SD1229	351
SD1244	359
SD1244-6	359
SD1279	356
SD1281	353
SD1283	354
SD1288	334
SD1289	333
SD1290	339
SD1300	316
SD1301	316
SD1345	152
SD1416	352
SD1445	153
SD1479	354

To Be Replaced	ECG Replacement
SD1484	346
SD-5400-2	3036
SD-5400-3	3036
SD-ERB24-04D	506
SD-ERC24-04D	506
SD-ERC26-13	506
SD-W04	167
SD-Y	116
SDA345	152
SDA445	153
SDB345	152
SDB445	153
SDD4	113
SDD5	114
SDD6	115
SDD420	128
SDD421	123A
SDD821	123A
SDD1220	128
SDD3000	123A
SDD-C10	113
SDGPD48	610
SDGPE6	612
SDGPE24	611
SDH-2	109
SDI445	153
SDJ345	152
SDJ445	153
SDK345	152
SDK445	153
SDL345	152
SDL445	153
SDM345	152
SDM445	153
SDN345	152
SDN445	153
SDR25	116
SDS113	116
SDS-113	116
SDS240	161
SDS420	161
SDT06	601
SDT401	162
SDT-410	162
SDT-411	163A
SDT-413	163A
SDT413	162
SDT-423	163A
SDT424	163A
SDT-430	163A
SDT431	163A
SDT-445	153
SDT522	283
SDT527	283
SDT532	283
SDT537	283
SDT542	283
SDT547	283
SDT1051	283
SDT1055	283
SDT1056	283
SDT1060	283
SDT1061	283
SDT1611	163A
SDT1612	163A
SDT1613	163A
SDT1614	163A
SDT1615	163A
SDT1616	163A
SDT1617	163A
SDT1618	163A
SDT-3048	121
SDT3321	129
SDT3322	129
SDT3325	187
SDT3326	186
SDT3421	282
SDT3422	282
SDT3423	282
SDT3424	282
SDT3425	282
SDT3426	282
SDT3427	282
SDT3428	282
SDT3429	282
SDT3442	282
SDT3501	129
SDT3502	129
SDT3503	129
SDT3505	187
SDT3506	187
SDT3509	153
SDT3510	153
SDT3513	153
SDT3514	153
SDT3550	187
SDT3552	187
SDT3553	187
SDT3575	218
SDT3576	218
SDT3577	218
SDT3578	218
SDT3579	218
SDT3701	153
SDT3702	153
SDT3703	153
SDT3704	153
SDT3706	153
SDT3707	153
SDT3708	153
SDT3709	153
SDT3710	153
SDT3711	153
SDT3712	153
SDT3713	153

To Be Replaced	ECG Replacement
SDT3715	153
SDT3716	153
SDT3717	153
SDT3720	153
SDT3721	153
SDT3722	153
SDT3725	153
SDT3726	153
SDT3727	153
SDT3729	153
SDT3730	153
SDT3733	153
SDT3760	180
SDT3764	180
SDT3765	180
SDT3766	180
SDT3775	187
SDT3776	187
SDT3778	187
SDT3826	180
SDT3827	180
SDT3875	180
SDT3876	180
SDT3877	180
SDT4301	186
SDT4302	282
SDT4304	282
SDT4305	282
SDT4306	282
SDT4307	282
SDT4308	282
SDT4309	282
SDT4310	282
SDT4311	282
SDT4312	282
SDT4455	186
SDT4483	186
SDT4551	186
SDT4553	186
SDT4583	186
SDT4611	186
SDT4612	186
SDT4614	186
SDT4615	186
SDT5001	186
SDT5006	186
SDT5011	186
SDT5102	152
SDT5112	153
SDT5501	186
SDT5506	186
SDT5511	186
SDT5901	186
SDT5902	186
SDT5906	186
SDT5907	152
SDT6001	152
SDT6011	152
SDT6013	152
SDT6031	152
SDT6101	186
SDT6102	186
SDT6103	152
SDT6104	186
SDT6105	186
SDT6106	186
SDT6901	175
SDT6905	175
SDT7401	282
SDT7402	282
SDT7403	282
SDT7411	282
SDT7412	282
SDT7413	282
SDT7414	282
SDT7415	282
SDT7416	282
SDT7417	282
SDT7418	282
SDT7419	282
SDT7511	152
SDT7512	152
SDT7514	152
SDT7515	152
SDT9001	186
SDT9002	186
SDT9003	186
SDT9004	187
SDT9005	186
SDT9006	186
SDT9007	186
SDT9008	186
SDT9009	152
SDT9201	130
SDT9202	180
SDT9205	130
SDT9206	130
SDT9207	180
SDT9210	130
SDT9261	130
SDT9301	130
SDT9302	130
SDT9303	130
SDT9304	130
SDT9305	130
SDT9306	130
SDT9307	130
SDT9308	130
SDT9309	130
SDT9701	181
SDT9704	181
SDT9707	181
SDT9901	162
SDT9902	162
SDT9903	162

@, * — See special notes on inside backcover.

To Be Replaced	ECG Replacement
SDT9904	162
SE-0.5A	5804
SE-0.5B	116
SE-05	116
SE05	116
SE-05-01	116
SE-05-2	117
SE-05A	116
SE05A	5804
SE05B	116
SE-05C	156
SE05C	125
SE05D	116
SE05S	116
SE05SS	116
SE-05X	116
SE-0566	123A
SE0S-01	116
SE0	125
SE-1.5A	156
SE-2	116
SE-5	116
SE5-0127	199
SE5-0128	123A
SE5-0247-C	519
SE5-0249	161
SE5-0250	161
SE5-0253	123A
SE5-0274	123A
SE5-0366	194
SE5-0367	123A
SE5-0370	159
SE-5-0399	127
SE5-0399	127
SE5-0452	128
SE5-0456	519
SE5-0565	199
SE5-0567	123A
SE5-0569	199
SE5-0608	123A
SE5-0745	194
SE5-0798	159
SE-5-0819	102
SE5-0831	159
SE5-0848	123A
SE5-0854	123A
SE5-0855	123A
SE5-0887	123A
SE5-0888	123A
SE5-0909	234
SE5-0938	199
SE5-0938-54	123A
SE5-0938-55	199
SE5-0938-56	199
SE5-0938-57	199
SE5-0949	159
SE5-0958	128
SE5-0963	152
SE5-0964	153
SE5-0966	177
SE5-0996	133
SE5-1057	159
SE5-1223	159
SE6	116
SE6(DUAL)	115
SE15B	156
SE15C	156
SE15D	156
SE30B26A	116
SE46	116
SE50	229
SE500G	108
SE504	108
SE521	108
SE555V	955M
SE1001	229
SE-1001	229
SE1001-1	229
SE1001-2	229
SE1002	161
SE-1002	123A
SE1002-1	161
SE1002-2	161
SE1010	161
SE1012	192
SE1019	108
SE-1019	108
SE1044	108
SE-1044	108
SE1331	123A
SE-1331	123A
SE1419	108
SE-1419	108
SE1730	125
SE2001	161
SE-2001	123A
SE2002	161
SE2020	107
SE2397	107
SE2400	160
SE2401	123A
SE2402	123A
SE-3001	108
SE3001	161
SE3001R	108
SE3001Y	108
SE3002	108
SE-3002	108
SE3003	108
SE3005	161
SE-3005	108
SE3019	161
SE-3019	108
SE3030	162
SE3031	162

To Be Replaced	ECG Replacement
SE3032	280
SE3033	130
SE-3033	130
SE-3034	224
SE3034	224
SE3035	130
SE3036	130
SE3040	175
SE3041	175
SE-3646	123A
SE3819	133
SE-4001	123A
SE4001	229
SE-4002	123A
SE4002	123A
SE4010	123A
SE-4010	123A
SE4020	161
SE4021	161
SE4022	161
SE4172	123A
SE5001	161
SE-5001	108
SE5002	161
SE-5002	108
SE5003	161
SE-5003	108
SE5004	161
SE5006	108
SE-5006	123A
SE-5006-14	108
SE5010	108
SE5015	108
SE5020	108
SE-5020	108
SE5021	161
SE-5021	108
SE5022	161
SE5023	161
SE-5023	161
SE5024	161
SE5025	161
SE-5025	161
SE5029	108
SE5030	108
SE5030A	123A
SE5030B	123A
SE5031	108
SE5032	161
SE5035	108
SE5036	108
SE5040	108
SE5050	161
SE-5050	108
SE5051	161
SE5052	161
SE5055	319
SE5056	108
SE5151	123A
SE5315	222
SE5450	3028
SE-5450-1	3028
SE-5450-2	3028
SE-5450-3	3028
SE-5451-1	3028
SE-5451-2	3028
SE-5451-3	3028
SE-6001	123A
SE6001	128
SE-6002	123A
SE6006	128
SE6010	123A
SE6020	128
SE6020A	128
SE6021	128
SE6021A	128
SE6022	128
SE6023	128
SE7001	154
SE-7001	103A
SE7002	154
SE7005	128
SE7006	124
SE7010	154
SE7015	128
SE7016	154
SE7017	154
SE7020	124
SE7030	124
SE7050	154
SE7055	154
SE7056	154
SE8001	128
SE-8001	128
SE8002	128
SE-8010	128
SE8010	128
SE8012	128
SE8040	123A
SE8041	128
SE8042	278
SE8510	128
SE8520	128
SE8521	128
SE8540	129
SE8541	129
SE8542	129
SE9002	130
SE9020	162
SE9060	175
SE9061	175
SE9062	175
SE9063	175
SE9080	130
SE9500	152

To Be Replaced	ECG Replacement
SE9560	218
SE9561	218
SE9562	218
SE9563	218
SE9570	185
SE9571	185
SE9572	185
SE9573	185
SE40022	121
SE-40022	121
SE50399	127
SEC1078	192
SEC1079	192
SEC1477	192
SEC1479	192
SELEN-26	113
SELEN-30	502
SELEN-38	113
SELEN-40	505
SELEN-42	120
SELEN-44	166
SELEN-48	119
SELEN-52	503
SELEN-58	502
SELEN-70	116
SELEN-92	506
SELEN-701	116
SEN2A1	166
SEN2A2	167
SEN2A4	168
SEN2A6	169
SEN2A8	170
SEN2A10	170
SES632	130
SES881	130
SES3819	132
SF0R2B41	5402
SF0R2B41(GAK)	5402
SF0R2D41	5404
SF0R2D41(GAK)	5404
SF0R2G41	5405
SF0R2G41(GAK)	5405
SF.T124	158
SF.T130	158
SF.T131P	158
SF.T163	160
SF.T171	100
SF.T172	100
SF.T173	100
SF.T174	100
SF.T184	101
SF.T187	171
SF.T212	127
SF.T213	127
SF.T214	127
SF.T221	158
SF.T222	102
SF.T223	158
SF.T227	102
SF.T237	102A
SF.T238	127
SF.T239	127
SF.T240	127
SF.T250	127
SF.T251	102A
SF.T252	102A
SF.T253	102A
SF.T264	105
SF.T306	102A
SF.T316	160
SF.T317	160
SF.T318	102
SF.T319	160
SF.T320	160
SF.T321	158
SF.T322	158
SF.T337	102A
SF.T351	158
SF.T352	158
SF.T353	176
SF.T354	160
SF.T357	160
SF.T358	160
SF.T377	103A
SF.T440	192
SF.T443	192
SF.T443A	192
SF.T445	192
SF.T714	192
SF1	506
SF-1	525
SF1A11	5412
SF1A11A	5412
SF1B11	5413
SF1B11A	5413
SF1CN1	125
SF1D11	5414
SF1D11A	5414
SF1R3B41	5454
SF1R3D41	5455
SF1R3G41	5457
SF1RG41	5457
SF3B12	5482
SF3B14	5511
SF3CN1	125
SF3D12	5483
SF3D14	5511
SF3G12	5486
SF3G14	5512
SF3G41	5465
SF4	125
SF4CN1	125
SF5	125
SF5A11	5481
SF5B12	5482

To Be Replaced	ECG Replacement
SF5D12	5483
SF5F12	5484
SF5G12	5485
SF5J12	5487
SF5Z11	5480
SF6	125
SF10A11	5501
SF10B11	5502
SF10B12	5522
SF10C11	5503
SF10D11	5504
SF10D12	5524
SF10E11	5505
SF10F11	5506
SF10F12	5526
SF10G11	5507
SF10G12	5527
SF10H11	5508
SF10J11	5529
SF10J12	5529
SF10L11	5531
SF10L12	5531
SF10Z11	5500
SF16A11	5521
SF16B11	5522
SF16B12	5522
SF16C11	5523
SF16D11	5524
SF16D12	5524
SF16E11	5525
SF16F11	5526
SF16F12	5526
SF16G11	5527
SF16G12	5527
SF16H11	5528
SF16J11	5529
SF16J12	5529
SF16L11	5531
SF16L12	5531
SF16Z11	5520
SF703SF	230
SF1001	123A
SF1713	123A
SF1714	123A
SF1726	123A
SF1730	123A
SF8014	159
SFB1087	451
SFB6183	116
SFB8970	222
SFC0025	775
SFC1710CP	910D
SFC2046	912
SFC2209R	309K
SFC2301A	1171
SFC2309R	309K
SFC2458DC	778
SFC2709C	909
SFC2709E	909D
SFC2710C	910
SFC2711C	911
SFC2711E	911D
SFC2741C	941
SFC2741E	941D
SFC2748C	1171
SFC2748M	1171
SFC2805EC	960
SFC2805RC	309K
SFC2806EC	962
SFC2808EC	964
SFC2812EC	966
SFC2815EC	968
SFC2824EC	972
SFC3012	771
SFC4050	755
SFC4052	755
SFC6032	723
SFC6050	767
SFC6051	767
SFC8012	771
SFC8012A	771
SFC8021A	771
SFC8999	222
SFD-23	129
SFD43	177
SFD83	177
SFD107	109
SFD112	109
SFD2285	222
SFE145	133
SFE303	221
SFE303-424	222
SFE425	222
SFE303424	222
SFIR3B41	5454
SFIR3D41	5455
SFOR2B41	5402
SFOR2D41	5404
SFOR2G41	5405
SFOR2G41(GAK)	5405
SFORIA41	5402
SFR135	116
SFR151	116
SFR152	116
SFR153	116
SFR154	116
SFR155	116
SFR156	116
SFR164	116
SFR251	116
SFR252	116
SFR253	116
SFR254	116
SFR255	116
SFR256	116

To Be Replaced	ECG Replacement
SFR258	125
SFR264	116
SFR266	116
SFR268	125
SFT104	109
SFT108	109
SFT120	160
SFT121	158
SFT122	158
SFT123	158
SFT124	158
SFT125	158
SFT125P	158
SFT130	158
SFT131	158
SFT131P	158
SFT143	158
SFT144	158
SFT145	158
SFT146	158
SFT151	102A
SFT152	102A
SFT162	160
SFT163	160
SFT-163	160
SFT171	160
SFT172	160
SFT173	160
SFT174	160
SFT184	101
SFT-184	103A
SFT186	154
SFT187	154
SFT190	121
SFT191	121
SFT192	121
SFT212	121
SFT213	121
SFT214	121
SFT221	102
SFT221A	102A
SFT222	102
SFT222A	102A
SFT223	100
SFT226	100
SFT227	100
SFT228	100
SFT229	100
SFT232	102A
SFT237	100
SFT238	121
SFT239	121
SFT240	121
SFT241	158
SFT242	158
SFT243	158
SFT250	121
SFT251	100
SFT252	100
SFT253	100
SFT259	101
SFT260	101
SFT261	101
SFT264	105
SFT265	105
SFT-265	105
SFT266	105
SFT-266	105
SFT267	105
SFT-267	105
SFT268	160
SFT288	100
SFT298	101
SFT-298	101
SFT306	102A
SFT-306	102A
SFT307	126
SFT-307	100
SFT308	126
SFT315	160
SFT-315	126
SFT316	160
SFT-316	126
SFT317	126
SFT-317	126
SFT318	126
SFT319	126
SFT-319	100
SFT320	126
SFT-320	126
SFT321	102A
SFT322	102A
SFT-322	102A
SFT323	102A
SFT-323	102A
SFT325	158/410
SFT327	102A
SFT-327	102A
SFT337	102A
SFT-337	102A
SFT337B	102A
SFT337V	102A
SFT351	102A
SFT352	102A
SFT-352	102A
SFT353	102A
SFT-353	102A
SFT354	126
SFT357	126
SFT-357	126
SFT357P	126
SFT358	160
SFT-358	160
SFT367	158
SFT377	103A

To Be Replaced	ECG Replacement
SFT440	128/411
SFT443	128
SFT443A	128
SFT445	128
SFT523	158
SFT526	102A
SFT713	123A
SFT714	123A
SFZ708	136A
SFZ716	142A
SG-005	116
SG005	5804
SG-5N	156
SG-5P	156
SG105	116
SG-105	116
SG201AT	1171
SG201T	1171
SG-205	116
SG205	5802
SG224J	987
SG224N	987
SG-264A	276
SG301AM	975
SG301AT	1171
SG-305	116
SG305	5804
SG307M	976
SG307N	976
SG309K	309K
SG323	116
SG324N	987
SG340-05K	309K
SG505	116
SG555CM	955M
SG556CN	978
SG608	276
SG608AA	276
SG609	279
SG609-3	279
SG613	276
SG-613	276
SG613-1	276
SG613-2	276
SG613-3	276
SG709CN	909D
SG709CT	909
SG710CD	910D
SG710CN	910D
SG710CT	910
SG711CD	911D
SG711CN	911D
SG711CT	911
SG723CD	923D
SG723CN	923D
SG723CT	923
SG741CD	941D
SG741CM	941M
SG741CN	941D
SG741CT	941
SG747CD	947D
SG747CN	947D
SG747CT	947
SG-805	116
SG805	5808
SG-1198	116
SG1198	116
SG1496	973
SG1496T	973
SG2001N	2011
SG2002N	2012
SG2003N	2013
SG2004N	2014
SG2182	102A&103A
SG2183	102A&103A
SG3045J	912
SG3045N	912
SG3046J	912
SG3046N	912
SG3058	914
SG3059	914
SG3079	914
SG3081J	916
SG3081N	916
SG3082N	2023
SG3182	177
SG3183	177
SG3198	177
SG3243	987
SG3400	116
SG3432	177
SG3516	177
SG3583	177
SG5013	128
SG5028	177
SG5392	177
SG5400	177
SG7805CK	309K
SG9150	177
SG-9150	177
SGR100	116
SGS17139XRH	1113
SGS87231	161
SH1	116
SH-1	116
SH1A	116
SH-1A	116
SH1B	125
SH1C	125
SH-1DE	116
SH1S	5802
SH4D05	116
SH4D1	116
SH4D2	116
SH4D3	116

To Be Replaced	ECG Replacement
SH4D4	116
SH4D6	116
SH4D8	125
SH5B11	5662
SH5D11	5663
SH5F11	5664
SH5G11	5665
SH5H11	5666
SH5J11	5667
SH15	116
SH16B11	5682
SH16D11	5683
SH16F11	5684
SH16G11	5685
SH16H11	5686
SH16J11	5697
SH1064	123A
SH9821	289
SHA7520	193
SHA7521	193
SHA7522	193
SHA7523	193
SHA7524	193
SHA7526	193
SHA7527	193
SHA7528	193
SHA7530	159
SHA7531	159
SHA7532	159
SHA7533	159
SHA7534	159
SHA7536	159
SHA7537	159
SHA7538	159
SHA7597	193
SHA7598	193
SHA7599	193
SHAD-1	116
SHAD1	116
SI05	5800
SI05A	5800
SI1	5801
SI1A	5802
SI5	5806
SI8A	156
SI10	5809
SI10A	156
SI50E	116
SI91G	116
SI100E	116
SI-600	169
SI1000E	125
SI-MC1352P	749
SI-MC1358P	712
SI-MC1364P	783
SI-RECT-044	116
SI-RECT-2	116
SI-RECT-25	116
SI-RECT-27	116
SI-RECT-33	116
SI-RECT-34	116
SI-RECT-35	177
SI-RECT-36	506
SI-RECT-37	116
SI-RECT-39	116
SI-RECT-44	506
SI-RECT-48	116
SI-RECT-49	116
SI-RECT-53	116
SI-RECT-59	116
SI-RECT-69	116
SI-RECT-73	116
SI-RECT-74	116
SI-RECT-75	116
SI-RECT-77	116
SI-RECT-84	116
SI-RECT-92	116
SI-RECT-94	116
SI-RECT-98	174
SI-RECT-100	116
SI-RECT-102	116
SI-RECT-102A	125
SI-RECT-110	156(4)
SI-RECT-110/SB-3F	116
SI-RECT-112	156(4)
SI-RECT-112/SB-3	156
SI-RECT-114	506
SI-RECT-122	116
SI-RECT-124	506
SI-RECT-136	125
SI-RECT-140/TR-6	137A
SI-RECT-140/TR6S	5070A
SI-RECT-144	116
SI-RECT-152	177
SI-RECT-154	116
SI-RECT-155	116
SI-RECT-156	116
SI-RECT-162	506
SI-RECT-168	5010A
SI-RECT-170	506
SI-RECT-174	113
SI-RECT-178	115
SI-RECT-178B	115
SI-RECT-178BF	113
SI-RECT-180	506
SI-RECT-204	125
SI-RECT-206	506
SI-RECT-208	156
SI-RECT-218	116
SI-RECT-222	116
SI-RECT-224	506
SI-RECT-226	116
SI-RECT-228	142A
SI-RECT-230	142A
SIB0-1	116

To Be Replaced	ECG Replacement
SIB01	116
SIB01-02	116
SIB-01-02	116
SIB01-04	116
SIB01-06	116
SIB01-06B	116
SIB-01-022	116
SIB02-03CR	116
SIB02-CR	116
SIB02-CR1	178MP
SIB020-1B	166
SIB0102	116
SIB-0102	116
SIB0201CR	116
SIB-0306	125
SIB0306	125
SIB0L	116
SIB0L-02	116
SIB30-15	506
SIB50B794-1	166
SIB91-01	116
SIB101-01	116
SIB101-02	116
SIB-C1-02	177
SIB-0306	125
SIB01-02	116
SIB0306	125
SID01E	116
SID01K	125
SID01L	116
SID02E	116
SID02K	125
SID02L	116
SID2A-1	113
SID2A-3	113
SID3B-3	115
SID30-15	551
SID30-132	525
SID30-137	506
SID50B851	177
SID51C052-19	156
SID51C169	116(4)
SID50894	177
SiDA0.5K	5806
SiDA0.5N	5808
SiDA0.5P	5809
SIDA05K	156
SIDA05N	156
SIDA05P	156
SIG1/100	116
SiG1/100	5802
SIG1/200	116
SiG1/200	5802
SIG1/200	116
SIG1/400	116
SiG1/400	5804
SIG1/400	116
SIG1/600	116
SiG1/600	116
SIG1/600	116
SIG1/800	125
SiG1/800	5808
SIL200	116
SIL-200	116
SIL4018	4018B
SIL4022	4022B
SIL4035	4035B
SIL4043	4043B
SIL4044	4044B
SIL4046	980
SIL4053	4053B
SIL4060	4060B
SIL4072	4072B
SIL4073	4073B
SIL4075	4075B
SIL4076	4076
SIL4098	4098B
SIL4510	4510B
SIL4511	4511B
SIL4514	4514B
SIL4515	4515B
SIL4516	4516B
SIR60	116
SIR-80	116
SIR-RECT-44	116
SIRB-10	166
SIRBA	116(4)
SIRECT-2	116
SIRECT-36	116
SIRECT-48	116
SIRECT-59	116
SIRECT-92	116
SIRECT-102	116
SIS20	109
SISD-1	506
SISD-1HF	125
SISD-1X	116
SISD-K	116
SISM-150-01	116
SISW-05-02	116
SISW-0502	116
SiT4/50	5481
SiT4/100	5482
SiT4/200	5483
SiT4/300	5484
SiT4/400	5485
SiT20/50	5541
SiT20/100	5542
SiT20/200	5543
SiT20/300	5544
SiT20/400	5545
SJ051A	5940
SJ051E	116
SJ051F	116
SJ052A	5940

To Be Replaced	ECG Replacement
SJ052E	116
SJ052F	116
SJ053E	5940
SJ053EK	5870
SJ053F	5800
SJ053K	5940
SJ054E	5940
SJ054EK	5870
SJ054K	5940
SJ60F	116
SJ101A	5942
SJ101F	116
SJ102A	5942
SJ102F	116
SJ103E	5942
SJ103EK	5872
SJ103F	5801
SJ103K	5942
SJ104E	5942
SJ104EK	5872
SJ104K	5942
SJ130	124
SJ201A	5942
SJ201F	116
SJ202A	5942
SJ202F	116
SJ203E	5942
SJ203EK	5874
SJ203F	5802
SJ203K	5942
SJ204E	5942
SJ204EK	5874
SJ204K	5942
SJ285	185
SJ301F	116
SJ302F	116
SJ304EK	5878
SJ401F	116
SJ402F	116
SJ403F	5804
SJ404EK	5878
SJ501F	116
SJ570	123A
SJ-570	116
SJ601F	116
SJ603	5882
SJ603E	5882
SJ603EK	5882
SJ603F	5806
SJ603K	5882
SJ604	5882
SJ604E	5882
SJ604EK	5882
SJ604K	5882
SJ619	130
SJ619-1	130
SJ652	218
SJ803F	5808
SJ805	124
SJ806	124
SJ811	175
SJ820	130
SJ821	219
SJ822	218
SJ1000F	5809
SJ1003F	156
SJ1106	130
SJ1152	153
SJ1165	124
SJ1171	153
SJ1172	175
SJ1201	124
SJ1272	180
SJ1284	153
SJ1286	124
SJ1470	130
SJ1902	247
SJ1903	248
SJ1936	249
SJ1937	250
SJ2000	130
SJ2001	219
SJ2008	130
SJ2009	218
SJ2023	180
SJ2024	180
SJ2031	129
SJ2032	128
SJ2047	181
SJ2064	181
SJ2095	175
SJ2517	181
SJ2518	180
SJ2519	284
SJ2520	285
SJ2585	292
SJ3408	175
SJ3423	162
SJ3447	175
SJ3464	130
SJ3477	162
SJ3478	162
SJ3507	180
SJ3519	181
SJ3520	219
SJ3604	130
SJ3636	180
SJ3637	180
SJ3648	175
SJ3678	130
SJ3679	219
SJ3680	175
SJ5196	162
SJ5525	164
SJ5526	165

To Be Replaced	ECG Replacement
SJ7343K	249
SJ8165K	130
SJ8701	130
SJ9110	130
SJ10003EK	5890
SJE42	152
SJE100	184
SJE103	190
SJE106	184
SJE108	185
SJE111	185
SJE112	185
SJE113	184
SJE114	185
SJE133	184
SJE202	185
SJE203	184
SJE205	157
SJE210	185
SJE211	184
SJE218	157
SJE220	182
SJE221	185
SJE222	184
SJE227	185
SJE228	184
SJE229	184
SJE231	185
SJE232	157
SJE237	184
SJE241	185
SJE242	184
SJE243	185
SJE244	184
SJE245	185
SJE246	184
SJE248	184
SJE253	184
SJE254	184
SJE255	184
SJE256	185
SJE257	185
SJE261	184
SJE262	184
SJE264	180
SJE265	185
SJE267	185
SJE271	184
SJE272	184
SJE273	185
SJE274	184
SJE275	185
SJE276	185
SJE277	185
SJE278	184
SJE279	185
SJE280	184
SJE283	185
SJE284	184
SJE288	185
SJE289	184
SJE290	157
SJE305	184
SJE320	184
SJE340	184
SJE400	157
SJE401	184
SJE402	184
SJE403	185
SJE404	184
SJE405	184
SJE407	184
SJE408	185
SJE482	235
SJE513	152
SJE-513	152
SJE514	153
SJE515	152
SJE-515	152
SJE516	182
SJE517	183
SJE527	184
SJE583	184
SJE584	185
SJE633	185
SJE634	184
SJE-649	184
SJE667	184
SJE669	184
SJE721	184
SJE723	185
SJE724	184
SJE736	185
SJE737	184
SJE743	185
SJE764	180
SJE768	185
SJE769	184
SJE781	184
SJE783	152
SJE784	184
SJE785	184
SJE797	185
SJE799	185
SJE801	184
SJE802	157
SJE1032	190
SJE1518	185
SJE1519	184
SJE1520	184
SJE2003	182
SJE3754	157
SJE5018	182
SJE5019	182
SJE5020	182

To Be Replaced	ECG Replacement
SJE-5038	186
SJE5402	184
SJE-5402	186
SJE5439	241
SJE5441	241
SJE5442	242
SK01	125
SK04	125
SK08	125
SK-1B	116
SK1FM	116
SK1K-2	116
SK1R-4	116
Sk1R-7	116
SK-1W50	5089A
SK1W55	148A
SK-1W55	5090A
SK-1WS0	109
SK7	101
SK-7	101
SK19	132
SK74H00	74H00
SK74H04	74H04
SK74LS00	74LS00
SK74LS02	74LS02
SK74LS03	74LS03
SK74LS04	74LS04
SK74LS05	74LS05
SK74LS08	74LS08
SK74LS10	74LS10
SK74LS11	74LS11
SK74LS14	74LS14
SK74LS20	74LS20
SK74LS27	74LS27
SK74LS30	74LS30
SK74LS32	74LS32
SK74LS38	74LS38
SK74LS42	74LS42
SK74LS51	74LS51
SK74LS73	74LS73
SK74LS74	74LS74A
SK74LS75	74LS75
SK74LS83	74LS83A
SK74LS85	74LS85
SK74LS86	74LS86
SK74LS93	74LS93
SK74LS107	74LS107
SK74LS109	74LS109A
SK74LS123	74LS123
SK74LS136	74LS136
SK74LS138	74LS138
SK74LS151	74LS151
SK74LS153	74LS153
SK74LS157	74LS157
SK74LS161	74LS161A
SK74LS163	74LS163A
SK74LS164	74LS164
SK74LS174	74LS174
SK74LS175	74LS175
SK74LS191	74LS191
SK74LS195	74LS195A
SK74LS221	74LS221
SK74LS240	74LS240
SK74LS253	74LS253
SK74LS257	74LS257
SK74LS259	74LS259
SK74LS266	74LS266
SK74LS273	74LS273
SK74LS280	74LS280
SK74LS298	74LS298
SK74LS367	74LS367
SK74LS377	74LS377
SK74S00	74S00
SK74S04	74S04
SK-218	125
SK342	904
SK1320	108
SK1639	159
SK1639D	159
SK1640	159
SK1640A	123A
SK1641	123A
SK1700	716
SK1856	159
SK1856A	159
SK2604	159
SK2604A	159
SK3003	102A
SK3004	102A
SK3005	100
SK3006	160
SK3007	160
SK3008	126
SK3009	121
SK3010	103A
SK3011	101
SK3012	105
SK3013	121MP
SK3014	121
SK3015	121MP
SK3016	116
SK3017	117
SK3017A	116
SK3018	161
SK3019	108
SK3020	123A
SK3021	124
SK3022	704
SK3023	704
SK3024	128
SK3025	129
SK3026	175
SK3027	130
SK3028	175(2)

To Be Replaced	ECG Replacement
SK3029	130MP
SK3030	116
SK3031	116
SK3032	125
SK3033	125
SK3034	127
SK3035	127
SK3036	181
SK3037	181(2)
SK3038	123A
SK3039	108
SK3040	154
SK3041	152
SK3042	230
SK3043	515
SK3044	154
SK3045	225
SK3046	123A
SK3047	128
SK3048	195A
SK3049	224
SK3050	222
SK3051	156
SK3052	131
SK3054	196
SK3055	134A
SK3056	135A
SK3057	136A
SK3058	137A
SK3059	138A
SK3060	139A
SK3061	140A
SK3062	142A
SK3063	145A
SK3064	146A
SK3065	222
SK3066	118
SK3067	502
SK3068	503
SK3069	501A
SK3070	711
SK3071	727
SK3072	712
SK3073	728
SK3074	729
SK3075	714
SK3076	715
SK3077	790
SK3078	789
SK3079	162
SK3080	125
SK3081	156
SK3082	226
SK3083	197
SK3084	197
SK3085	197
SK3086	226MP
SK3087	109
SK3088	109
SK3089	112
SK3090	109
SK3091	109
SK3092	141A
SK3093	143A
SK3094	144A
SK3095	147A
SK3096	148A
SK3097	149A
SK3098	150A
SK3099	151A
SK3100	177
SK3101	706
SK3102	710
SK3103	228
SK3104	228
SK3105	166
SK3106	168
SK3107	170
SK3108	505
SK3109	119
SK3110	120
SK3111	165
SK3112	133
SK3113	516
SK3114	159
SK3115	165
SK3116	132
SK3117	108
SK3118	159
SK3119	113
SK3120	114
SK3121	115
SK3122	123A
SK3123	176
SK3124	123A
SK3125	525
SK3127	515
SK3128	515
SK3129	726
SK3130	506
SK3131	175
SK3132	233
SK3133	164
SK3134	705A
SK3135	708
SK3136	5072A
SK3137	192A
SK3138	193
SK3139	5074A
SK3140	786
SK3141	780
SK3142	5075A
SK3143	730
SK-3144	723
SK3144	723

To Be Replaced	ECG Replacement
SK3145	5077A
SK3146	787
SK3147	788
SK3148	146A
SK3149	791
SK3150	5084A
SK3151	5081A
SK3152	1024
SK3153	1027
SK3155	1025
SK3156	172A
SK3157	703A
SK3159	718
SK3160	720
SK-3160	801
SK3161	722
SK3162	725
SK3163	736
SK3164	923
SK3165	923D
SK3166	949
SK3167	738
SK3169	781
SK3170	731
SK3171	744
SK3172	743
SK3173	219
SK3174	116
SK3175	506
SK3180	263
SK3181	262
SK3182	243
SK3183	246
SK3184	1115
SK3186	1174
SK3188	241
SK3189	242
SK3190	184
SK3191	185
SK3192	186
SK3193	187
SK3194	286
SK3195	311
SK3198	131
SK3199	188
SK3200	189
SK3202	210
SK3203	211
SK3204	731
SK3210	1176
SK3211	797
SK3212	1175
SK3213	1177
SK3215	780
SK3216	798
SK3218	278
SK3221	264
SK3222	263
SK3223	1100
SK3224	1102
SK3225	1104
SK3226	1071
SK3227	1069
SK3228	1061
SK3229	1110
SK3230	1154
SK3231	1155
SK3232	191
SK3234	746
SK3235	739
SK3236	748
SK3237	795
SK3238	799
SK3239	236
SK3240	779-1*
SK3241	232
SK3242	816
SK3243	1160
SK3244	287
SK3245	199
SK3247	234
SK3249	1052
SK3250	315
SK3251	302
SK3252	306
SK3253	295
SK3254	785
SK3255	815
SK3260	284
SK3262	129
SK3263	123A
SK3264	123A
SK3265	128
SK3270	284
SK3276	745
SK3277	802
SK3278	803
SK3279	747
SK3280	750
SK3281	1103
SK3282	1153
SK3283	1101
SK3284	1080
SK3285	1105
SK3286	1131
SK3287	1132
SK3288	1003
SK3289	1158
SK3291	1090
SK3292	1148
SK3295	1072
SK3296	276
SK3297	280
SK3298	299
SK3299	237

To Be Replaced	ECG Replacement
SK3300	531
SK3301	532
SK3302	533
SK3303	522
SK3304	500A
SK3305	534
SK3306	523
SK3307	529
SK3308	530
SK3311	116
SK3312	116
SK3313	116
SK3314	515
SK3315	507
SK-3328	740A
SK3329	524
SK3330	5066A
SK3331	5067A
SK3332	5068A
SK3333	5069A
SK3334	5071A
SK3335	5079A
SK3336	5080A
SK3337	5085A
SK3338	5086A
SK3339	5087A
SK3340	5088A
SK3341	5089A
SK3342	5090A
SK3343	5092A
SK3345	5095A
SK3347	5097A
SK3348	5098A
SK3349	5099A
SK3350	5100A
SK3351	5101A
SK3352	5102A
SK3353	5103A
SK3354	5104A
SK3355	5105A
SK3358	1006
SK3359	281
SK3360	280MP
SK3361	1041
SK3362	1040
SK3363	1043
SK3365	1004
SK3366	1039
SK3367	1042
SK3368	1029
SK3369	1035
SK3370	1036
SK3371	1037
SK3376	1010
SK3377	5111A
SK3378	5112A
SK3379	5113A
SK3380	5114A
SK3381	5115A
SK3382	5116A
SK3383	5117A
SK3384	5118A
SK3385	5119A
SK3386	5120A
SK3387	5121A
SK3388	5122A
SK3389	5123A
SK3390	5124A
SK3391	5125A
SK3392	5126A
SK3393	5127A
SK3394	5128A
SK3395	5129A
SK3396	5130A
SK3397	5131A
SK3398	5132A
SK3399	5133A
SK3400	5134A
SK3401	5135A
SK3402	5136A
SK3403	5137A
SK3404	5138A
SK3405	5139A
SK3406	5140A
SK3407	5141A
SK3408	5142A
SK3409	5143A
SK3410	5144A
SK3411	5145A
SK3412	5146A
SK3413	5147A
SK3414	5148A
SK3415	5149A
SK3416	5150A
SK3417	5151A
SK3418	5152A
SK3419	5153A
SK3420	5154A
SK3421	5155A
SK3422	5156A
SK3423	5157A
SK3424	5158A
SK3425	5159A
SK3427	5161A
SK3428	5162A
SK3429	5163A
SK3430	5164A
SK3431	5165A
SK3432	5166A
SK3433	287
SK3434	288
SK3434A	123A
SK3435	1028
SK3436	1028
SK3440	291

@, * — See special notes on inside back cover.

To Be Replaced	ECG Replacement
SK3441	292
SK3442	310
SK3443	513
SK3444	123A
SK3446	1097
SK3449	297
SK3450	298
SK-3451	807
SK-3453	742
SK-3454	790
SK-3455	804
SK3457	1054
SK3458	1056
SK3459	1058
SK3460	1060
SK3461	1082
SK3462	977
SK3463	601
SK3464	300
SK3466	159
SK3467	283
SK3468	1185
SK3469	1195
SK3470	1049
SK3471	1046
SK3473	1140
SK3474	1160
SK3475	1050
SK3476	1085
SK3477	1087
SK3478	1130
SK3480	1178
SK3485	1142
SK3486	1184
SK3488	1128
SK3489	1134
SK3490	1133
SK3492	1011
SK3494	1055
SK3495	1074
SK3496	1073
SK3498	1078
SK3499	1009
SK3500	5882
SK3501	5994
SK3502	5513
SK3504	5529
SK3505	5547
SK3506	5642
SK3507	56006
SK3508	5675
SK3509	5695
SK3510	130
SK3511	181
SK3512	282
SK3513	129
SK3514	941
SK3515	5805
SK3516	5847
SK3517	5883
SK3518	5995
SK3519	5643
SK3520	5677
SK3521	5697
SK3522	5697
SK3523	6408
SK3524	784
SK3525	724
SK3526	947
SK3533	5635
SK3535	181
SK3538	286
SK3539	908
SK3540	903
SK3541	914
SK3542	904
SK3543	912
SK3544	917
SK3545	907
SK3546	905
SK3547	900
SK3548	906
SK3549	901
SK3550	916
SK3552	909D
SK3553	909
SK3554	917
SK3555	911
SK3556	911D
SK3558	5554
SK3562	175
SK3563	284
SK3564	955M
SK3570	5643
SK3572	5554
SK3573	5556
SK3574	5554
SK3575	5554
SK3576	5556
SK3579	5524
SK3580	5527
SK3581	5543
SK3582	5545
SK3583	5641
SK3584	5862
SK3585	5924
SK3590	909D
SK3591	960
SK3592	966
SK3593	968
SK3596	976
SK3597	5455
SK3598	5457
SK3599	5658
SK3600	5854

To Be Replaced	ECG Replacement
SK3601	5850
SK3602	5878
SK3603	5874
SK3604	5870
SK3605	5990
SK3606	5986
SK3607	5980
SK3608	6034
SK3609	6026
SK3610	6020
SK3613	5514
SK3614	5504
SK3615	5517
SK3627	5404
SK3628	6402
SK3701	1193
SK3703	1096
SK3705	1189
SK3708	1169
SK3730	160
SK3770	160
SK3803	159
SK3960	123A
SK-3960	123A
SK4000	4000
SK4001	4001B
SK4002	4002B
SK4007	4007B
SK4009	4049B
SK4011	4011B
SK4012	4012B
SK4013	4013B
SK4015	4015B
SK4016	4016B
SK4017	4017B
SK4019	4019B
SK4023	4023B
SK4024	4024B
SK4025	4025B
SK4027	4027B
SK4029	4029B
SK4030	4030B
SK4040	4040B
SK4042	4042B
SK4046	980
SK4049	4049B
SK4050	4050B
SK4051	4051B
SK4069	4069
SK4071	4071B
SK4081	4081B
SK4520	4520B
SK5184A	124
SK5797	159
SK5798	159
SK5801	123A
SK5915	123A
SK6345	159
SK6346	159
SK6347	159
SK6347A	159
SK7181	108
SK7400	7400
SK7401	7401
SK7402	7402
SK7404	7404
SK7405	7405
SK7406	7406
SK7407	7407
SK7410	7410
SK7414	7414
SK7416	7416
SK7420	7420
SK7427	7427
SK7430	7430
SK7432	7432
SK7437	7437
SK7438	7438
SK7440	7440
SK7442	7442
SK7445	7445
SK7447	7447
SK7451	7451
SK7454	7454
SK7473	7473
SK7474	7474
SK7475	7475
SK7476	7476
SK7485	7485
SK7486	7486
SK7490	7490
SK7493	7493A
SK7495	7495
SK7664	159
SK8215	123A
SK8251	123A
SK8261	154
SK-31024-3	108
SK40161	40161B
SK74107	74107
SK74121	74121
SK74123	74123
SK74150	74150
SK74151	74151
SK74153	74153
SK74161	74161
SK74164	74164
SK74192	74192
SK74193	74193
SK74195	74195
SK707380	5633
SK16510006-2	129
SK16510006-4	129
SKA1079	129
SKA1080	123A

To Be Replaced	ECG Replacement
SKA1117	123A
SKA1279	159
SKA1395	123A
SKA1416	107
SKA4074	108
SKA4075	108
SKA4076	108
SKA4129	159
SKA4141	123A
SKA4410	192
SKA4525	108
SKA4616	128
SKA4621	129
SKA4768	161
SKA9013	108
SKB8339	123A
SKN25/02	5917
SKN25/04	5921
SKN25/08	5929
SKN50/02	6027
SKN50/04	6035
SKN50/08	6043
SKN170/04	6354
SKN170/04R	6355
SKN170/08	6358
SKN170/08R	6359
SKN240/02	6355
SKN240/04	6355
SKN240/08	6359
SKR25/02	5916
SKR25/04	5920
SKR25/08	5928
SKR50/02	6026
SKR50/04	6034
SKR50/08	6042
SKR240/02	6354
SKR240/04	6354
SKR240/08	6358
SKS1/01	125
SKS1/04	125
SKS1/08	125
SKT16/02C	5543
SKT16/04C	5545
SKT16/06C	5547
SKU25/06UNF	5697
SKU30/04	5695
SKU30/05	5697
SKU30/06	5697
SKVT7504	815
SKWHG7006	159
SL-030	116
SL030/3490	116
SL030S	116
SL-030T	116
SL030T	116
SL051A	5940
SL01640	9914
SL02518	9900
SL02519	9914
SL02734	9914
SL02779	9914
SL02781	9923
SL03019	9914
SL03021	9923
SL03667	9913
SL03911	9949
SL03912	9961
SL03913	9963
SL03914	9932
SL03915	9944
SL03916	9937
SL03917	9951
SL04194	9910
SL04217	9900
SL04218	9914
SL04563	9930
SL04567	9936
SL04568	9932
SL04570	9951
SL04732	9914
SL07040	909
SL07055	909
SL07059	703A
SL07682	716
SL07684	910
SL08058	703A
SL08066	909
SL08797	941D
SL-2	116
SL2	116
SL-3	116
SL3	5878
SL-4	116
SL5	116
SL-5	5802
SL10	5890
SL50	5870
SL91	116
SL92	116
SL93	116
SL100	108
SL-100	108
SL-103	5872
SL103	116
SL200	106
SL201	106
SL300	123A
SL301C	128
SL301CE	128
SL400	5878
SL500	5882
SL600	5882
SL608	125
SL610	125
SL708	125

To Be Replaced	ECG Replacement
SL710	125
SL800	5886
SL800X	5886
SL-833	116
SL833	116
SL-833A	116
SL833A	116
SL1000	5890
SL1000X	5890
SL1626	74161
SL3045DG	912
SL3045DP	912
SL3046DG	912
SL3046DP	912
SL3081	916
SL3081DG	916
SL3081DP	916
SL3082	2023
SL3086DG	912
SL3086DP	912
SL3101	129
SL3111	129
SL3426	5160A
SL7059	703A
SL7283	703A
SL7308	703A
SL7531	703A
SL7593	703A
SL7790	703A
SL7990	123A
SL8020	703A
SL11877	9930
SL11878	9936
SL11879	9946
SL11880	9948
SL11881	9962
SL14959	74H10
SL14960	74H11
SL14971	7408
SL14972	7438
SL16121	9923
SL16122	9910
SL16201	9930
SL16203	9951
SL16204	9946
SL16206	9932
SL16208	9937
SL16209	9099
SL16210	9936
SL16211	9945
SL16212	9962
SL16215	9944
SL16216	9949
SL16218	9963
SL16516	9930
SL16517	9933
SL16518	9936
SL16519	9946
SL16520	9962
SL16521	9945
SL16522	9099
SL16584	9930
SL16585	9931
SL16586	9932
SL16587	9936
SL16588	9945
SL16589	9946
SL16590	9948
SL16591	9962
SL16793	7400
SL16794	7401
SL16795	7402
SL16796	7404
SL16797	7405
SL16798	7408
SL16799	7411
SL16800	7420
SL16801	7410
SL16802	7430
SL16803	7440
SL16804	7450
SL16805	7453
SL16806	7473
SL16807	7474
SL16808	7476
SL16809	7492
SL16810	7496
SL16811	9944
SL17242	7473
SL17284	9932
SL17289	9936
SL17869	7408
SL17887	7411
SL18386	7483
SL18387	74107
SL18699	9911
SL20575	703A
SL20721	705A
SL20755	790
SL20783	923
SL20927	909
SL20929	941
SL21017	715
SL21122	714
SL21384	915
SL21385	923D
SL21436	910
SL21441	707
SL21577	915
SL21584	949
SL21619	923
SL21654	712
SL21673	941
SL21823	910
SL21829	911

To Be Replaced	ECG Replacement
SL21864	722
SL21885	923
SL21895	703A
SL21923	909
SL22044	911
SL22108	725
SL22109	712
SL22110	714
SL22111	715
SL22112	790
SL22211	725
SL22273	912
SL22310	923D
SL22348	925
SL22623	912
SL22745	941M
SL22756	718
SL22757	722
SL22819	703A
SL22935	923D
SL23059	941M
SL23109	941
SL23111	941M
SL23145	722
SL23147	712
SL23252	941M
SL23256	912
SL23296	923
SL23297	911
SL23299	736
SL23324	909
SL23325	923D
SL23326	941D
SL23418	705A
SL23421	703A
SL23422	910
SL23423	911
SL23424	725
SL23425	949
SL23426	722
SL23482	909
SL23485	923
SL23486	941
SL23496	941M
SL23546	923
SL23560	705A
SL23648	723
SL23649	781
SL23829	912
SL23903	790
SL23904	714
SL23905	715
SL23985	725
SL24618	1114
SL24898	707
SL25420	955M
SL25529	309K
SL53424	9930
SL53425	9932
SL53426	9935
SL53427	9936
SL53428	9944
SL53429	9946
SL53431	7401
SL56908	9900
SL56909	9903
SL56910	9904
SL56911	9905
SL56912	9906
SL56913	9907
SL56914	9908
SL56915	9909
SL56916	9910
SL56920	9915
SL56924	9974
SL56925	9911
SL56926	9109
SL56927	9110
SL56928	9111
SL56929	9112
SL56930	9930
SL56931	9931
SL56932	9932
SL56933	9933
SL56934	9935
SL56935	9936
SL56936	9937
SL56937	9941
SL56938	9944
SL56939	9945
SL56940	9946
SL56941	9948
SL56942	9949
SL56944	9951
SL56945	9961
SL56946	9962
SL56947	9963
SL56948	9800
SL56949	9801
SL56950	9802
SL56951	9803
SL56952	9804
SL56962	9814
SL56963	9093
SL56964	9094
SL56965	9097
SL56966	9099
SL56967	9135
SL56968	9157
SL56969	9158
SL57258	9923
SL57301	7400
SL57302	7401
SL57303	7402
SL57304	7403

To Be Replaced	ECG Replacement
SL57305	7404
SL57306	7405
SL57307	7406
SL57308	7407
SL57311	7410
SL57312	7411
SL57313	7412
SL57314	7413
SL57315	7416
SL57316	7417
SL57317	7420
SL57318	7423
SL57319	7425
SL57320	7426
SL57321	7427
SL57322	7430
SL57323	7432
SL57324	7437
SL57325	7438
SL57326	7439
SL57327	7440
SL57328	7441
SL57329	7442
SL57330	7443
SL57331	7444
SL57332	7445
SL57333	7446
SL57334	7447
SL57336	7450
SL57337	7451
SL57338	7453
SL57339	7454
SL57340	7460
SL57341	7470
SL57342	7472
SL57344	7474
SL57345	7475
SL57346	7476
SL57347	7480
SL57348	7482
SL57349	7483
SL57350	7485
SL57351	7486
SL57352	7490
SL57353	7491
SL57354	7492
SL57356	7494
SL57358	7496
SL57359	74107
SL57360	74121
SL57361	74122
SL57364	74150
SL57365	74151
SL57366	74152
SL57367	74153
SL57368	74155
SL57369	74156
SL57370	74164
SL57371	74165
SL57372	74166
SL57373	74174
SL57374	74175
SL57375	74176
SL57376	74177
SL57377	74178
SL57378	74179
SL57379	74180
SL57380	74181
SL57381	74182
SL57382	74190
SL57383	74191
SL57384	74192
SL57385	74193
SL57386	74196
SL57387	74197
SL57388	74198
SL57389	74199
SL58003	74H00
SL58004	74H01
SL58005	74H04
SL58006	74H05
SL58007	74H08
SL58008	74H10
SL58009	74H11
SL58010	74H20
SL58011	74H21
SL58012	74H22
SL58013	74H30
SL58014	74H40
SL58015	74H50
SL58016	74H51
SL58017	74H52
SL58018	74H53
SL58019	74H54
SL58020	74H55
SL58021	74H60
SL58022	74H61
SL58023	74H62
SL58024	74H71
SL58025	74H72
SL58026	74H73
SL58027	74H74
SL58028	74H76
SL58029	74H78
SL58030	74H103
SL58031	74H106
SL58032	74H108
SL58033	74H183
SL58034	74S00
SL58035	74S03
SL58036	74S04
SL58037	74S05
SL58039	74S11
SL58040	74S15
SL58041	74S20

To Be Replaced	ECG Replacement
SL58042	74S22
SL58043	74S40
SL58044	74S64
SL58045	74S65
SL58046	74S74
SL58047	74S112
SL58048	74S113
SL58049	74S114
SL58050	74S133
SL58051	74S134
SL58052	74S140
SL58053	74S153
SL58054	74S157
SL58055	74S158
SL58056	74S175
SL58057	74S194
SL58058	74S258
SL58233	7414
SL58234	74123
SL58235	74154
SL58236	74160
SL58237	74161
SL58238	74162
SL58239	74163
SL58240	74195
SL58241	74S02
SL58242	74S08
SL58243	74S09
SL58244	74S30
SL58245	74S51
SL58246	74S86
SL58247	74S138
SL58248	74S151
SL58249	74S174
SL58250	74S181
SL58251	74S251
SL58901	4001B
SL58902	4002B
SL58903	4011B
SL58904	4012B
SL58905	4013B
SL58906	4014B
SL58907	4015B
SL58908	4016B
SL58909	4017B
SL58910	4019B
SL58911	4020B
SL58912	4021B
SL58913	4023B
SL58914	4024B
SL58915	4025B
SL58916	4027B
SL58917	4028B
SL58918	4029B
SL58919	4030B
SL58920	4040B
SL58921	4042B
SL58922	4049B
SL58923	4050B
SL58924	4051B
SL58925	4052B
SL58926	4068B
SL58927	4069
SL58928	4071B
SL58929	4077B
SL58930	4078B
SL58931	4081B
SL58932	4085B
SL58933	4086B
SL58934	4512B
SL58935	4518B
SL58936	4520B
SL58937	4522B
SL58938	4539B
SL58939	4555B
SL58940	4556B
SL58941	40085B
SL58942	40097B
SL58950	40175B
SL59417	74S10
SL580444	74S64
SLA01	125
SLA11AB	116
SLA11C	116
SLA12AB	116
SLA12C	116
SLA13AB	116
SLA13C	116
SLA14AB	116
SLA14C	116
SLA15AB	116
SLA15C	116
SLA16AB	116
SLA16C	116
SLA17AB	116
SLA17C	116
SLA18AB	125
SLA18C	125
SLA19AB	125
SLA19C	125
SLA21A	5800
SLA21B	5800
SLA21C	5800
SLA22A	5801
SLA22B	5801
SLA22C	5801
SLA23B	5802
SLA23C	5802
SLA24A	5804
SLA24B	5804
SLA24C	5804
SLA25A	5804
SLA25B	5804
SLA25C	5804
SLA26A	5806

To Be Replaced	ECG Replacement
SLA26B	5806
SLA26C	5806
SLA27A	5806
SLA27B	5806
SLA27C	5806
SLA28A	5808
SLA28B	5808
SLA28C	5808
SLA29A	5809
SLA29B	5809
SLA29C	5809
SLA440	116
SLA440B	116
SLA441	116
SLA441B	116
SLA442	116
SLA442B	116
SLA443	116
SLA443B	116
SLA444	116
SLA444B	116
SLA445	116
SLA-445	116
SLA445B	116
SLA536	116
SLA537	116
SLA538	116
SLA539	116
SLA540	116
SLA547	116
SLA560	125
SLA561	125
SLA599	116
SLA599A	116
SLA600	116
SLA600A	116
SLA601	116
SLA601A	116
SLA602	116
SLA602A	116
SLA603	116
SLA603A	116
SLA604	116
SLA604A	116
SLA605	116
SLA605A	116
SLA606	116
SLA606A	116
SLA1095	116
SLA1096	116
SLA1100	116
SLA1101	116
SLA1102	116
SLA1103	5804
SLA1104	116
SLA1105	116
SLA1487	116
SLA1488	116
SLA1489	116
SLA1490	116
SLA1491	116
SLA1492	116
SLA1692	116
SLA1693	116
SLA1694	116
SLA1695	116
SLA1696	116
SLA1697	116
SLA2610	116
SLA2611	116
SLA2612	116
SLA2613	116
SLA2614	116
SLA2615	116
SLA2616	125
SLA2617	125
SLA3193	116
SLA3194	116
SLA3195	116
SLA3196	125
SLA5197	5800
SLA5198	5801
SLA5199	5802
SLA5200	5804
SLA5201	5806
SLA5202	5808
SLA5203	5809
SLA01	125
SLEN-26	113
SM0843	102A
SM-1	116
SM-1-005	116
SM1-02	116
SM-1-04FR	116
SM-1-47	116
SM-1K	116
SM4	116
SM5	116
SM5B12	5662
SM5D12	5663
SM5G12	5667
SM10	116
SM-10	116
SM10B11	5662
SM10B12	5673
SM10D11	5663
SM10D12	5673
SM10G11	5667
SM10G12	5676
SM11	116
SM20	116
SM30	116
SM30D11	5693
SM30G11	5695
SM31	116

To Be Replaced	ECG Replacement
SM40	116
SM50	116
SM51	116
SM-51	788
SM60	116
SM63	7475
SM70	125
SM71	125
SM73(Diode)	125
SM73(I.C.)	7475
SM80	125
SM81	125
SM83	125
SM100	125
SM101	125
SM103	125
SM105	116
SM110	116
SM120	116
SM130	116
SM140	116
SM150	125
SM-150	125
SM-150-005	125
SM150-01	125
SM150-02	125
SM-150-02	125
SM-150-02 (Boost)	506
SM-150-02 (Centering)	507
SM150-6	125
SM-150-6(Focus)	506
SM150-11	125
SM-150A	125
SM150A	125
SM150B	125
SM-150B	125
SM150C	125
SM150D	125
SM150S	125
SM150SS	125
SM160	116
SM170	125
SM180	125
SM200	125
SM205	116
SM210	116
SM217	160
SM-217	100
SM220	116
SM230	116
SM240	116
SM250	116
SM260	116
SM270	125
SM280	125
SM300	125
SM483	116
SM486	116
SM487	116
SM488	116
SM505	116
SM510	116
SM512	116
SM513	116
SM514	116
SM515	116
SM516	116
SM517	125
SM518	125
SM520	125
SM576-1	123A
SM576-2	123A
SM645	116
SM646	116
SM705	116
SM710	116
SM716	123A
SM-716	123A
SM720	116
SM730	116
SM740	116
SM750	116
SM760	116
SM770	125
SM780	125
SM800	125
SM843	102A
SM862	126
SM1297	160
SM1507	159
SM1600	160
SM2491	160
SM2492	160
SM2700	123A
SM2701	123A
SM2716	128
SM2718	129
SM3014	160
SM3104	123A
SM3117A	123A
SM3505	123A
SM3978	128
SM3986	123A
SM3987	129
SM-4304-S	161
SM4508-B	123A
SM-4508-B	123A
SM4547	159
SM4574A	159
SM4719	159
SM-5104	1255
SM5104	1255
SM5104F	1255
SM-5104F	1255
SM5104G	1255

To Be Replaced	ECG Replacement
SM5109	1167
SM5379	123A
SM5564	123A
SM-5564	123A
SM5643	123A
SM-5643	123A
SM5796	108
SM5981	123A
SM6251	128
SM6727	154
SM6728	129
SM6773	123A
SM6814	198
SM7545	123A
SM7815	123A
SM-7815	123A
SM7836	123A
SM-7836	123A
SM7989	224
SM7991	128
SM-7991	195A
SM8112	123A
SM8113	123A
SM8341	102A
SM8978	123A
SM9008	123A
SM9135	123A
SM9253	123A
SM-A-595819-1	704
SM-A-595830-12	107
SM-A-618687-1	175
SM-A-726655	123A
SM-A-726658	159
SM-A-726664	123A
SM-B-523974	159
SM-B-574495	159
SM-B-610342	123A
SM-B-686767	123A
SM-C-583256	123A
SM-C-706156	519
SMB447610	102
SMB447610A	102
SMB454549	102
SMB454760	160
SMB-541191	177
SMB620782-1	176
SMB621960	102
SMB-706009D	128
SMC449077	129
SMC-583259	128
SMC-620774-1	128
SMC750123-1	941
SMR-8ZG	541
SMV1172	610
SN0303	116
SN1	116
SN-1	116
SN-1Z	116
SN60	101
SN74H00N	74H00
SN74H01N	74H01
SN74H04N	74H04
SN74H05N	74H05
SN74H10N	74H10
SN74H11N	74H11
SN74H20N	74H20
SN74H21N	74H21
SN74H22N	74H22
SN74H30N	74H30
SN74H40N	74H40
SN74H50N	74H50
SN74H51N	74H51
SN74H52N	74H52
SN74H53N	74H53
SN74H54N	74H54
SN74H55N	74H55
SN74H60N	74H60
SN74H61N	74H61
SN74H62N	74H62
SN74H71N	74H71
SN74H72N	74H72
SN74H73N	74H73
SN74H74N	74H74
SN74H76N	74H76
SN74H78N	74H78
SN74H87N	74H87
SN74H101N	74H101
SN74H102N	74H102
SN74H103N	74H103
SN74H106N	74H106
SN74H108N	74H108
SN74H183N	74H183
SN74L03	74LS03
SN74L03N	74LS03
SN74L73N	74LS73
SN74LS00	74LS00
SN74LS00N	74LS00
SN74LS02	74LS02
SN74LS02N	74LS02
SN74LS03	74LS03
SN74LS03N	74LS03
SN74LS04	74LS04
SN74LS04N	74LS04
SN74LS05	74LS05
SN74LS05N	74LS05
SN74LS08	74LS08
SN74LS08N	74LS08
SN74LS10	74LS10
SN74LS10N	74LS10
SN74LS11	74LS11
SN74LS11N	74LS11
SN74LS14	74LS14
SN74LS14N	74LS14
SN74LS20	74LS20
SN74LS20N	74LS20

To Be Replaced	ECG Replacement
SN74LS27	74LS27
SN74LS27N	74LS27
SN74LS30	74LS30
SN74LS30N	74LS30
SN74LS32	74LS32
SN74LS32N	74LS32
SN74LS38	74LS38
SN74LS38N	74LS38
SN74LS42	74LS42
SN74LS42N	74LS42
SN74LS49N	74LS49N
SN74LS51	74LS51
SN74LS51N	74LS51
SN74LS73	74LS73
SN74LS73N	74LS73
SN74LS74	74LS74A
SN74LS74A	74LS74A
SN74LS74AN	74LS74A
SN74LS74N	74LS74A
SN74LS75	74LS75
SN74LS75N	74LS75
SN74LS83	74LS83A
SN74LS83A	74LS83A
SN74LS83AN	74LS83A
SN74LS83N	74LS83A
SN74LS85	74LS85
SN74LS85N	74LS85
SN74LS86	74LS86
SN74LS86N	74LS86
SN74LS93	74LS93
SN74LS93N	74LS93
SN74LS107	74LS107
SN74LS107N	74LS107
SN74LS109	74LS109A
SN74LS109A	74LS109A
SN74LS109AN	74LS109A
SN74LS109N	74LS109A
SN74LS123	74LS123
SN74LS138	74LS138
SN74LS138N	74LS138
SN74LS151	74LS151
SN74LS151N	74LS151
SN74LS153	74LS153
SN74LS153N	74LS153
SN74LS157	74LS157
SN74LS157N	74LS157
SN74LS161	74LS161A
SN74LS161A	74LS161A
SN74LS161AN	74LS161A
SN74LS161N	74LS161A
SN74LS163	74LS163A
SN74LS163A	74LS163A
SN74LS163AN	74LS163A
SN74LS163N	74LS163A
SN74LS164	74LS164
SN74LS164N	74LS164
SN74LS174	74LS174
SN74LS174N	74LS174
SN74LS175	74LS175
SN74LS175N	74LS175
SN74LS191	74LS191
SN74LS191N	74LS191
SN74LS193	74LS193
SN74LS193N	74LS193
SN74LS195	74LS195A
SN74LS195A	74LS195A
SN74LS195AN	74LS195A
SN74LS195N	74LS195A
SN74LS221	74LS221
SN74LS221N	74LS221
SN74LS240	74LS240
SN74LS240N	74LS240
SN74LS241	74LS241
SN74LS241N	74LS241
SN74LS242	74LS242
SN74LS242N	74LS242
SN74LS243	74LS243
SN74LS243N	74LS243
SN74LS244	74LS244
SN74LS244N	74LS244
SN74LS248N	74LS248
SN74LS249N	74LS249
SN74LS253	74LS253
SN74LS253N	74LS253
SN74LS257	74LS257
SN74LS257N-	74LS257
SN74LS259	74LS259
SN74LS259N	74LS259
SN74LS266	74LS266
SN74LS266N	74LS266
SN74LS273	74LS273
SN74LS273N	74LS273
SN74LS280	74LS280
SN74LS280N	74LS280
SN74LS298	74LS298
SN74LS298N	74LS298
SN74LS367	74LS367
SN74LS367N	74LS367
SN74LS377	74LS377
SN74LS377N	74LS377
SN74S00N	74S00
SN74S03N	74S03
SN74S04N	74S04
SN74S05N	74S05
SN74S10N	74S10
SN74S11N	74S11
SN74S15N	74S15
SN74S20N	74S20
SN74S22N	74S22
SN74S30N	74S30
SN74S40N	74S40
SN74S51N	74S51
SN74S64N	74S64
SN74S65N	74S65
SN74S74N	74S74

To Be Replaced	ECG Replacement
SN74S86N	74S86
SN74S112N	74S112
SN74S113N	74S113
SN74S114N	74S114
SN74S124N	74S124
SN74S133N	74S133
SN74S134N	74S134
SN74S138J	74S138
SN74S138N	74S138
SN74S140N	74S140
SN74S151J	74S151
SN74S151N	74S151
SN74S153J	74S153
SN74S153N	74S153
SN74S157J	74S157
SN74S157N	74S157
SN74S158J	74S158
SN74S158N	74S158
SN74S174N	74S174
SN74S175J	74S175
SN74S175N	74S175
SN74S194J	74S194
SN74S194N	74S194
SN74S251J	74S251
SN74S251N	74S251
SN74S258J	74S258
SN74S258N	74S258
SN80	101
SN166	128
SN167	128
SN238S	749
SN-400-319-P1	159
SN962-2M	9962
SN4448	519
SN7221P	975
SN7400	7400
SN7400A	7400
SN7400N	7400
SN7401N	7401
SN7402	7402
SN7402N	7402
SN7403	7403
SN7403N	7403
SN7404A	7404
SN7404N	7404
SN7405	7405
SN7405A	7405
SN7405N	7405
SN7406N	7406
SN7407N	7407
SN7408N	7408
SN7409N	7409
SN7410N	7410
SN7412N	7412
SN7413N	7413
SN7414N	7414
SN7416N	7416
SN7417N	7417
SN7420N	7420
SN7422	7422
SN7422N	7422
SN7423N	7423
SN7425N	7425
SN7426	7426
SN7426N	7426
SN7427N	7427
SN7428	7428
SN7428N	7428
SN7430N	7430
SN7432N	7432
SN7433	7433
SN7433N	7433
SN7437N	7437
SN7438N	7438
SN7440N	7440
SN7442N	7442
SN7443N	7443
SN7444N	7444
SN7445N	7445
SN7446AN	7446
SN7447AN	7447
SN7448N	7448
SN7450N	7450
SN7451N	7451
SN7453N	7453
SN7454N	7454
SN7460N	7460
SN7470N	7470
SN7472N	7472
SN7473	7473
SN7473N	7473
SN7474	7474
SN7474N	7474
SN7475N	7475
SN7476N	7476
SN7480N	7480
SN7481	7481
SN7481A	7481
SN7481AN	7481
SN7482N	7482
SN7483AN	7483
SN7484AN	7484
SN7485N	7485
SN7486N	7486
SN7488AN	7488
SN7489N	7489
SN7490	7490
SN7490AN	7490
SN7490N	7490
SN7491AN	7491
SN7492AN	7492
SN7493	7493A
SN7493A	7493A
SN7493AN	7493A
SN7493N	7493A

To Be Replaced	ECG Replacement
SN7494N	7494
SN7495AN	7495
SN7496N	7496
SN7497N	7497
SN7545ZB	7545ZB
SN7610N-07	722
SN7611N	722
SN7642N	714
SN7666	712
SN7666N	712
SN15830J	9930
SN15830N	9930
SN15831J	9931
SN15831N	9931
SN15832J	9932
SN15832N	9932
SN15833J	9933
SN15833N	9933
SN15835J	9935
SN15835N	9935
SN15836J	9936
SN15836N	9936
SN15837J	9937
SN15837N	9937
SN15838J	9135
SN15838N	9135
SN15844J	9944
SN15844N	9944
SN15845J	9945
SN15845N	9945
SN15846J	9946
SN15846N	9946
SN15848J	9948
SN15848N	9948
SN15849J	9949
SN15849N	9949
SN15850J	9950
SN15850N	9950
SN15851J	9951
SN15851N	9951
SN15857J	9157
SN15857N	9157
SN15858J	9158
SN15858N	9158
SN15861J	9961
SN15861N	9961
SN15862J	9962
SN15862N	9962
SN15863J	9963
SN15863N	9963
SN52301	975
SN72301	975
SN72301AL	1171
SN72301AP	975
SN72307	976
SN72307P	976
SN72471P	941M
SN72555JG	955M
SN72555JP	955M
SN72555P	955M
SN72558	778
SN72558JG	778
SN72558P	778
SN72709J	909D
SN72709L	909
SN72709N	909D
SN72710J	910D
SN72710L	910
SN72710N	910D
SN72711J	911D
SN72711L	911
SN72711N	911D
SN72723J	923D
SN72723L	923
SN72723N	923D
SN72741J	941D
SN72741JG	941M
SN72741L	941
SN72741N	941D
SN72741P	941M
SN72747J	947D
SN72747JA	947D
SN72747L	947
SN72747N	947D
SN72748JG	975
SN72748L	1171
SN72748P	975
SN72905	961
SN72906	963
SN72912	967
SN72915	969
SN72924	972
SN74107N	74107
SN74109	74109
SN74109N	74109
SN74110	74110
SN74110N	74110
SN74111	74111
SN74111N	74111
SN74121N	74121
SN74122N	74122
SN74123N	74123
SN74125	74125
SN74125N	74125
SN74126	74126
SN74126N	74126
SN74128	74128
SN74128N	74128
SN74132	74132
SN74132N	74132
SN74141N	74141
SN74145	74145
SN74145N	74145
SN74150N	74150
SN74151	74151

To Be Replaced	ECG Replacement
SN74151AN	74151
SN74151N	74151
SN74152N	74152
SN74153N	74153
SN74154N	74154
SN74155N	74155
SN74156N	74156
SN74160N	74160
SN74161N	74161
SN74162N	74162
SN74163N	74163
SN74164N	74164
SN74165N	74165
SN74166N	74166
SN74170N	74170
SN74174N	74174
SN74175N	74175
SN74176N	74176
SN74177N	74177
SN74178N	74178
SN74179N	74179
SN74180N	74180
SN74181N	74181
SN74182N	74182
SN74190N	74190
SN74191N	74191
SN74192N	74192
SN74193N	74193
SN74196J	74196
SN74196N	74196
SN74197N	74197
SN74198N	74198
SN74199N	74199
SN75110N	722
SN75450AN	75450B
SN75450B	75450B
SN75450BN	75450B
SN75450N	75450B
SN75451AN	75451B
SN75451B	75451B
SN75451BN	75451B
SN75451N	75451B
SN75452AN	75452B
SN75452BN	75452B
SN75452N	75452B
SN75453AN	75453B
SN75453B	75453B
SN75453BN	75453B
SN75453N	75453B
SN75454AN	75454B
SN75454B	75454B
SN75454BN	75454B
SN75454N	75454B
SN75476N	2011
SN75477N	2012
SN75478N	2013
SN75491AN	75491B
SN75491B	75491B
SN75491BN	75491B
SN75491N	75491B
SN75492AN	75492B
SN75492B	75492B
SN75492BN	75492B
SN75492N	75492B
SN75493	75493
SN75493N	75493
SN75494	75494
SN75494N	75494
SN75497	75497
SN75497N	75497
SN75498	75498
SN75498N	75498
SN76001	1113
SN76001A	1113
SN76001AN	1113
SN76001N	1113
SN76007N	812
SN76021N	810
SN76021ND	810
SN76104	718
SN76104N	718
SN76105	720
SN76105N	720
SN76107N	722
SN76110	722
SN76110N	722
SN76111	719
SN76113N	722
SN76115	801
SN76115N	801
SN76116A	743
SN76116N	743
SN76130N	721
SN76131	725
SN76131N	719
SN76177	804
SN76177ND	804
SN76242	714
SN76242N	714
SN76242N-07	714
SN76243	715
SN76243N	715
SN76246	790
SN76246N	790
SN76266	728
SN76266N	728
SN76267	729
SN76267N	729
SN76298N	738
SN76530P	747
SN76547N	830
SN76564N	783
SN76565N	783
SN76591P	815
SN76600	746

To Be Replaced	ECG Replacement
SN76600N	746
SN76600P	746
SN76635N	744
SN76642	709
SN76642N	709
SN76642P	709
SN76643N	708
SN76650	749
SN76650N	749
SN76651N	748
SN76653N	708
SN76665	712
SN76665N	712
SN76666	712
SN76666N	712
SN-76666N	712
SN76666N	712
SN-76666N	712
SN76669N	737
SN76675N	723
SN76676L	781
SN76678P	736
SN76689	788
SN76689N	788
SN151800J	9800
SN151800N	9800
SN151801J	9801
SN151801N	9801
SN151802J	9802
SN151802N	9802
SN151803J	9803
SN151803N	9803
SN151804J	9804
SN151804N	9804
SN151805J	9805
SN151805N	9805
SN151806J	9806
SN151806N	9806
SN151807J	9807
SN151807N	9807
SN151808J	9808
SN151808N	9808
SN151809J	9809
SN151809N	9809
SN151810J	9810
SN151810N	9810
SN151811J	9811
SN151811N	9811
SN151812J	9812
SN151812N	9812
SN158093J	9093
SN158093N	9093
SN158094J	9094
SN158094N	9094
SN158097J	9097
SN158097N	9097
SN158099J	9099
SN158099N	9099
SN766008	746
SN766110	722
SNi5837J	9937
SNO303	116(2)
SNT204	159
SNT204A	159
SO1	160
SO-1	160
SO2	160
SO-2	160
SO3	160
SO-3	160
SO5	116
SO10G	125
SO25	102A
SO-25	102A
SO46	110
SO65	102A
SO65A	126
SO-65A	160
SO-65A	160
SO88	102A
SO-88	102A
SO501	116
SO-632	139A
SO19806	199
SO25094	199
SOA	125
SOD20AS	5944
SOD30AL	5800
SOD30AS	5940
SOD30BL	5800
SOD30BS	5940
SOD30CS	5940
SOD30DL	5800
SOD30DS	5940
SOD50AL	5800
SOD50AS	5940
SOD50BL	5800
SOD50BS	5940
SOD50CL	5800
SOD50DL	5800
SOD50DS	5940
SOD100AL	5802
SOD100AS	5944
SOD100BL	5802
SOD100BS	5944
SOD100CL	5802
SOD100CS	5944
SOD100DS	5802
SOD200AL	5802
SOD200BL	5802
SOD200BS	5944
SOD200CL	5802
SOD200CS	5944
SOD200D	116
SOD-200D	156

To Be Replaced	ECG Replacement
SOD200DL	5802
SOD200DS	5944
SONY 065	1300
SONY 065A	1300
SONY 075	1301
SONY 075B	1301
SONY 095	1308
SONY 095A	1308
SONY 095C	1308
SONY 161A	1309
SONY 162	1310
SONY 164A	1302
SONY 170	1303
SONY 172	1304
SONY 173	1305
SONY 177	1306
SONY 181	1307
SOS0121	129
SP-1	116
SP1	116
SP1K-1	116
SP1K-2	116
SP1K-4	116
SP1U-2	116
SP-1.5A	5800
SP26	104
SP39	127
SP-46	109
SP47	104
SP62	127
SP70	159
SP-70	198
SP82A	112
SP90	159
SP101	177
SP148-3	121
SP-148-3	121
SP176	104
SP230	104
SP334	121
SP404	121
SP404T	121
SP-404T	121
SP441	121
SP-441	121
SP441D	104
SP441G	121
SP441S	104
SP485	121
SP-485	121
SP485B	121
SP485BLK	121
SP485BLU	121
SP485BRN	121
SP485W	121
SP485WHT	121
SP486	104
SP-486	121
SP-486W	121
SP486W	121
SP486WHT	121
SP634	121
SP-634	121
SP649	121
SP-649	121
SP649-1	121
SP-649-1	121
SP-649-1	121
SP744	121
SP819R	121
SP834	121
SP-834	121
SP838	179
SP838-1	179
SP875	121
SP880	104
SP-880	121
SP880-1	121
SP-880-1	121
SP880-3	121
SP-880-3	121
SP891	104
SP-891	121
SP891B	121
SP-891B	121
SP891BLU	121
SP891G	121
SP891GRN	121
SP891R	121
SP891W	121
SP-891W	121
SP891WHT	121
SP1013A	121
SP1013B	104
SP1029	179
SP1081	213
SP1105	213
SP1108	104
SP-1108	121
SP1118	121
SP1137	104
SP1271	121
SP1323	104
SP1403	104
SP1481	121
SP1481-1	121
SP1481-2	121
SP1481-3	121
SP1481-4	121
SP1481-5	121
SP1482	121
SP1482-2	121
SP1482-3	121
SP1482-4	121
SP1482-5	121

To Be Replaced	ECG Replacement
SP-1482-5	121
SP1482-6	121
SP1482-7	121
SP1483	121
SP-1483	121
SP1483-1	121
SP1483-2	121
SP1483-3	121
SP-1484	121
SP1484-1	179
SP1484-2	179
SP1484-3	179
SP1484-4	179
SP1484-5	179
SP1550-3	121
SP1556	121
SP1556-1	121
SP1556-2	121
SP-1556-2	121
SP1556-3	121
SP1556-4	121
SP1563-2	121
SP1595BLK	121
SP1595BLU	121
SP1595GRN	121
SP1595RED	121
SP1596BLK	121
SP1596BLU	121
SP1596GRN	121
SP1596RED	121
SP1600	104
SP1603	121
SP-1603	121
SP1603-1	121
SP-1603-1	121
SP1603-2	121
SP-1603-2	121
SP1603-3	121
SP1619	104
SP1650	179
SP1651	104
SP1657	121
SP1742	127
SP1801	121
SP1817	179
SP1844	121
SP1927	104
SP1938	121
SP1950	121
SP1994	213
SP2045	121
SP2046	121
SP2048	121
SP2072	121
SP2076	121
SP2077	179
SP2094	121
SP2155	121
SP2158	103A
SP-2158	124
SP2188	103A
SP2234	104
SP2247	104
SP2341	121
SP2358	104
SP2361	121
SP2361BLU	121
SP2361BRN	121
SP2361GRN	121
SP2361ORN	121
SP2361RED	121
SP2361YEL	121
SP2395	121
SP2411	127
SP2426	105
SP2431	104
SP2431P	105
SP2493	121
SP2512	127
SP2541	121
SP2551	131
SP2610	179
SP2692	213
SP2702	213
SP2708	179
SP3096	330
SP3103	330
SP4168	108
SP4231	130
SP4436	161
SP8400	154
SP8401	154
SP8402	192
SP8416	152
SP8660	152
SP8918	184
SP12271	106
SPC40	123A
SPC42	123A
SPC50	123A
SPC51	123A
SPC52	123A
SPC401	283
SPC413	283
SPC430	283
SPC431	283
SPD-80059	181
SPD-80060	181
SPD-80061	181
SPD-80062	130
SPD-80123	128
SPF024	133
SPF215	222
SPF274	222
SPF512	222

To Be Replaced	ECG Replacement
SPF724	133
SPF792	133
SPF-792	312
SPIK1	116
SPIK2	116
SPN-01	116
SPS08	5491
SPS010	5491
SPS020	5521
SPS030	5541
SPS035	5541
SPS-0121	129
SPS0121	129
SPS-0122	128
SPS0122	128
SPS4	108
SPS12	159
SPS18	5491
SPS20	108
SPS22	159
SPS28	5492
SPS-29	129
SPS38(SCR)	5494
SPS38(Transistor)	108
SPS40	108
SPS-41	123A
SPS42	159
SPS42A	159
SPS43-1	107
SPS47	159
SPS48	5494
SPS49	128
SPS58	5496
SPS68	5496
SPS91	121
SPS110	5491
SPS120	5522
SPS130	5542
SPS135	5542
SPS210	5492
SPS220(SCR)	5524
SPS220(Transistor)	108
SPS230	5543
SPS235	5543
SPS310	5494
SPS320	5526
SPS330	5544
SPS335	5544
SPS401K	159
SPS410	5494
SPS420	5527
SPS428	108
SPS430	5545
SPS435	5545
SPS510	5496
SPS514	159
SPS514A	159
SPS520	5528
SPS530	5546
SPS535	5546
SPS610	5496
SPS620	5529
SPS630	5547
SPS635	5547
SPS636	128
SPS637	129
SPS720	5530
SPS817	123A
SPS817N	123A
SPS820	5531
SPS837	189
SPS856	107
SPS-856	107
SPS860	107
SPS-860	107
SPS868	123A
SPS871	126
SPS-952	123A
SPS-952-2	123A
SPS1045	123A
SPS1097	159
SPS1097A	159
SPS1107	188
SPS1351	108
SPS-1351	108
SPS1352	108
SPS-1352	108
SPS1353	108
SPS-1353	108
SPS1436	152
SPS1437	153
SPS-1473	108
SPS1473	108
SPS1473(Red)	107
SPS-1475	123A
SPS1475	123A
SPS1475(Ylw)	123A
SPS-1475YT	123A
SPS-1476	123A
SPS1523	159
SPS1523A	159
SPS-1539	159
SPS1539	159
SPS1539(White)	159
SPS1915-1	123AP
SPS1915-2	123AP
SPS2110	108
SPS2111	108
SPS-2111	108
SPS2224	108
SPS2225	123A
SPS2226	129
SPS2265	108
SPS2265-2	108
SPS2266	108

To Be Replaced	ECG Replacement
SPS2269	159
SPS2270	123A
SPS2271	199
SPS2272	159
SPS2274	159
SPS2279	159
SPS2320	108
SPS-2320	108
SPS2323	272
SPS2664	108
SPS3003	108
SPS3015	123A
SPS3329	159
SPS3370	108
SPS3724	159
SPS3724A	159
SPS3735	123A
SPS3751	123A
SPS3786	159
SPS3786A	159
SPS3787	107
SPS3900	123A
SPS3907	123A
SPS3908	123A
SPS3909	123A
SPS3912	128
SPS3914	128
SPS3915	123A
SPS3923	123A
SPS3924	159
SPS3924A	159
SPS3925	123A
SPS3926	123A
SPS3927	159
SPS3927A	159
SPS3929	108
SPS3930	123A
SPS3931	159
SPS3931A	159
SPS3936	123A
SPS3937	108
SPS3938	123A
SPS3940	123A
SPS3948	108
SPS3951	123A
SPS3952	108
SPS3957C	123A
SPS3967	123A
SPS3968	108
SPS3971	108
SPS3972	123A
SPS3973	123A
SPS3987	159
SPS3988	159
SPS3988A	159
SPS3990	159
SPS3990A	159
SPS3999	123A
SPS4002	108
SPS4003	123A
SPS4004	123A
SPS4005	108
SPS4006	123A
SPS4007	159
SPS4007A	159
SPS4008	108
SPS4009	123A
SPS4010	129
SPS4013	159
SPS4013A	159
SPS4014	159
SPS4014A	159
SPS4016	108
SPS4017	123A
SPS4018	159
SPS4018A	159
SPS4019	159
SPS4019A	159
SPS4020	123A
SPS4025	159
SPS4025A	159
SPS4026	159
SPS4026A	159
SPS4027	159
SPS4027A	159
SPS4028	159
SPS4028A	159
SPS4029	123A
SPS4030	108
SPS4031	159
SPS4031A	159
SPS4032	123A
SPS4034	123A
SPS4037	123A
SPS4038	128
SPS4039	123A
SPS4040	123A
SPS4041	123A
SPS4042	123A
SPS4043	108
SPS4044	123A
SPS4045	123A
SPS4049	123A
SPS4050	108
SPS4051	108
SPS4052	123A
SPS4053	123A
SPS4054	159
SPS4054A	159
SPS4055	123A
SPS4056	159
SPS4056A	159
SPS4059	123A
SPS4060	123A
SPS4061	123A

To Be Replaced	ECG Replacement
SPS4062	123A
SPS4063	123A
SPS4064	159
SPS4064A	159
SPS4066	123A
SPS4067	123A
SPS4068	108
SPS4069	123A
SPS4072	159
SPS4072A	159
SPS4073	159
SPS4073A	159
SPS4074	123A
SPS4075	123A
SPS-4075	123A
SPS4076	159
SPS-4076	129
SPS4076A	159
SPS4077	123A
SPS-4077	128
SPS4078	159
SPS-4078	129
SPS4078A	159
SPS4079	108
SPS4080	108
SPS4081	123A
SPS4082	159
SPS4082A	159
SPS4083	123A
SPS4084	123A
SPS4085	123A
SPS4086	159
SPS4086A	159
SPS4087	159
SPS4087A	159
SPS4088	123A
SPS4089	123A
SPS4090	159
SPS4090A	159
SPS4091	108
SPS4092	211
SPS4095	123A
SPS4099	189
SPS4143	107
SPS-4145	108
SPS4145	108
SPS4167	108
SPS4168	107
SPS4169	123A
SPS4199	123A
SPS4237	185
SPS4272	199
SPS4300	128
SPS4301	129
SPS4302	159
SPS4303	123A
SPS4309	128
SPS4310	129
SPS4311	128
SPS4312	129
SPS4313	123A
SPS4314	159
SPS4314A	159
SPS4343	161
SPS4345	123A
SPS4347	123A
SPS4348	159
SPS4348A	159
SPS4354	159
SPS4354A	159
SPS4355	159
SPS4356	123A
SPS4359	123A
SPS4360	123A
SPS4361	128
SPS4363	123A
SPS4365	159
SPS4365A	159
SPS4367	123A
SPS4368	123A
SPS4382	123A
SPS4399	108
SPS4423	108
SPS4446	123A
SPS4450	123A
SPS4451	123A
SPS4452	159
SPS4452A	159
SPS4453	123A
SPS4455	123A
SPS4456	123A
SPS4457	123A
SPS4458	159
SPS4458A	159
SPS4459	123A
SPS4460	159
SPS4460A	159
SPS4461	128
SPS4462	129
SPS4472	123A
SPS4473	159
SPS4473A	159
SPS4476	123A
SPS4477	129
SPS4478	123A
SPS4480	159
SPS4480A	159
SPS4489	159
SPS4489A	159
SPS4490	128
SPS4491	123A
SPS4492	129
SPS4493	123A
SPS4494	123A
SPS4495	128

To Be Replaced	ECG Replacement
SPS4497	129
SPS4610	108
SPS4813	159
SPS4814	199
SPS4815	159
SPS4920	123A
SPS4942	123A
SPS5000	123A
SPS5006	123A
SPS5006-1	123A
SPS5006-2	123A
SPS5007	159
SPS5007-1	159
SPS5007-1A	159
SPS5007-2	159
SPS5007-2A	159
SPS5007A	159
SPS5008	159
SPS5450	194
SPS5450S	194
SPS5451	292
SPS5457	123A
SPS5458	159
SPS5556	123AP
SPS5809	128
SPS6109	159
SPS6109A	159
SPS6111	123A
SPS6112	123A
SPS6113	123A
SPS6124	128
SPS6125	129
SPS6208	159
SPS6571	123A
SPS6709	123A
SPS6712	159
SPS6713	194
SPS6714	123A
SPS6723	154
SPS7378	123
SPS7497	188
SPS7652	123A
SPS7867	123AP
SPT06	5673
SPT08	5673
SPT010	5673
SPT015	5673
SPT025	5681
SPT030	5693
SPT040	5693
SPT16	5673
SPT18	5673
SPT26	5673
SPT28	5673
SPT36	5675
SPT38	5675
SPT46	5675
SPT48	5675
SPT56	5676
SPT58	5676
SPT66	5677
SPT68	5677
SPT110	5673
SPT115	5673
SPT125	5682
SPT130	5693
SPT140	5693
SPT210	5673
SPT215	5673
SPT225	5683
SPT230	5693
SPT240	5693
SPT310	5675
SPT315	5675
SPT325	5684
SPT330	5695
SPT340	5695
SPT410	5675
SPT415	5675
SPT425	5685
SPT430	5695
SPT440	5695
SPT510	5676
SPT515	5676
SPT525	5686
SPT530	5697
SPT540	5697
SPT610	5677
SPT615	5677
SPT625	5697
SPT630	5697
SPT640	5697
SPT3440	198
SPT3713	130
SPT5303	181
SQ7	101
SQ-7	103A
SQ46	109
SQ1220	610
SQ1220A	610
SQ1224	611
SQ1224A	611
SQ1226	612
SQ1226A	612
SQ1234A	613
SQ1238	614
SQ1238A	614
SQ1270	610
SQ1270A	610
SQ1274	611
SQ1274A	611
SQ1276	612
SQ1276A	612
SQ1284A	613
SQ1288	614

To Be Replaced	ECG Replacement
SQ1288A	614
SQ1720	610
SQ1724	611
SQ1724A	611
SQ1726	612
SQ1726A	612
SQ1734	613
SQ1738	614
SQ5461A	610
SQ5463A	611
SQ5464A	612
SQ5468A	613
SQ5470A	614
SQD-2170	123
SR-0004	113
SR0004	178MP
SR05K-2	116
SR-05K-2	116
SR1	102A
SR-1	116
SR1A-1	116
SR1A1	116
SR1A-1	116
SR1A-2	116
SR1A2	116
SR1A-2	116
SR1A-4	116
SR1A4	116
SR1A-4	116
SR1A-8	116
SR1A8	116
SR1A-8	116
SR1A-12	116
SR1A12	116
SR1A-12	117
SR1B	166
SR1D1M	116
SR1DM	116
SR1DM1	116
SR1DM-1	116
SR1DM-2	5800
SR1DM-4	116
SR1DM-4	116
SR1DMX	116
SR1E	116
SR1EM	116
SR1EM1	116
SR1EM-1	116
SR1EM2	116
SR1EM-2	116
SR1EM-4	156
SR1EM-X	116
SR1FM	116
SR1FM-1	116
SR1FM2	116
SR1FM-2	506
SR1FM4	116
SR1FM-4	116
SR1FM6	116
SR1FM8	116
SR1FM10	116
SR1FM12	116
SR1FM-12	125
SR1FM16	125
SR1FM20	125
SR1FMA	116
SR1HM-2	506
SR1HM-4	506
SR1HM-8	506
SR1HM-12	506
SR1HM-16	506
SR1K	116
SR-1K	116
SR1K	116
SR1K-0	116
SR1K08	116
SR1K-1	116
SR1K1	116
SR1K-1K	116
SR1K-2	116
SR1-K2	116
SR-1K2	116
SR1K2	116
SR-1K-2	116
SR1K-2	116
SR1K-2/494	116
SR-1K-2A	125
SR-1K-2B	125
SR-1K-2C	125
SR-1K-2D	125
SR1K-4	116
SR1K4	116
SR1K-8	116
SR1K8	116
SR1K/494	116
SR1K-Z	116
SR-1R-0	116
SR1T	116
SR1Z	116
SR-1Z	116
SR-2	125
SR2A-1	116
SR2A1	116
SR2A-2	116
SR2A2	116
SR2A-4	116
SR2A4	116
SR2A-8	125
SR2A8	116
SR2A-12	125
SR2A12	116
SR2B12	156
SR2B16	156
SR2B20	156
SR3	116

To Be Replaced	ECG Replacement
SR-3	116
SR3AM	125
SR3AM1	5800
SR3AM2	125
SR3AM-2	156
SR3AM-3	5801
SR3AM4	125
SR3AM6	5804
SR3AM8	5804
SR3AM-8	117
SR3AM10	5806
SR3BM-6	116
SR4	116
SR5	116
SR-5	116
SR-5K	116
SR6	113
SR10	114
SR10D1	5940
SR10D2	5942
SR10D4	5942
SR-13	178MP
SR13	113
SR13H	116
SR-13H	116
SR-14	116
SR14	114
SR-15	506
SR15	114
SR16	117
SR-16(Philco)	515
SR17	116
SR-17	116
SR-17(Philco)	515
SR-18	116
SR18	5808
SR20	113
SR-20	178MP
SR21	113
SR22	116
SR-22	116
SR23	116
SR-23	116
SR24	116
SR-24	116
SR25	506
SR27	116
SR-27	116
SR28	116
SR-28	116
SR29	113
SR30	116
SR-30	116
SR31	119
SR-31	119
SR32	118
SR-32	118
SR-34	177
SR-35	125
SR35	116
SR37	120
SR-37	120
SR40	116
SR50	116
SR60	116
SR76	116
SR100	116
SR-100	5802
SR101-1	116
SR-101-1	116
SR101-2	116
SR-101-2	116
SR-103D	519
SR105	116
SR112	116
SR-112	116
SR114	116
SR-114	5802
SR120	116
SR-120	116
SR-120-1	116
SR130-1	108
SR-130-1	116
SR131-1	116
SR-131-1	116
SR-132-1	116
SR132-1	5800
SR135-1	116
SR135-1	116
SR-136	116
SR136	5800
SR144	116
SR145	116
SR150	125
SR-150-01	116
SR-150-1	116
SR151	116
SR152	116
SR153	5940
SR154	156
SR200	116
SR200B	116
SR205	116
SR210	5802
SR220	5802
SR-390	116
SR390	116
SR390-2	117
SR401	116
SR-401	116
SR405	116
SR475	5800
SR499	156
SR-499	156
SR500	116

To Be Replaced	ECG Replacement
SR500B	116
SR507	5802
SR605	116
SR806-126	116
SR846-2	116
SR-846-2	116
SR846-3	116
SR851	116
SR851-121	116
SR889	116
SR-889	116
SR1024	116
SR1104	116
SR1156	506
SR1266	116
SR1378-1	116
SR1378-2	5804
SR1378-3	116
SR1422	5800
SR1493	116
SR1549	116
SR1598	5800
SR1643A	5800
SR1650	5808
SR1668	116
SR-1668	116
SR1692	116
SR1693	116
SR1694	116
SR1695	116
SR1731-1	116
SR1731-2	116
SR1731-3	116
SR1731-4	116
SR1731-5	116
SR1742	116
SR1762	5802
SR1766	116
SR-1849-1	116
SR1984	116
SR2121	116
SR2301	116
SR2301A	116
SR2462	552
SR2462(YELLOW)	552
SR2956	330
SR3010	116
SR3582	116
SR3943	116
SR6134	116
SR6324	116
SR6325	116
SR6385	116
SR6415	116
SR6560	116
SR6567	116
SR6617	116
SR6684	552
SR6689(GREEN)	552
SR6723	116
SR6724	116
SR9000	118
SR9001	119
SR-9001	125
SR9002	113
SR-9002	113
SR9003	116(3)
SR9005	116
SR-9005	120
SR-9007	125
SR50253-2	167
SR50411-1	116
SR50517	117
SR75844	123A
SR-IK-2	116
SRF278	316
SRF400	316
SRF2017	318
SRI-155740B	5547
SRIK-2	116
SRIK-4	116
SRK1	116
SRK-1	116
SRK1-4	116
SRK-2	116
SRLFM-1	116
SRM-8Z	541
SRM-8ZG	541
SRR13	113
SS0001	102A
SS0001A	102A
SS0001O	116
SS0002	102A
SS0002A	102A
SS0003	158
SS0003A	102A
SS0004	102A
SS0004A	102A
SS0005	102A
SS0005A	102A
SS0007	109
SS0008	109
SS0009	116
SS00010	116
SS-1	116
SS1-145128	123A
SS16	112
SS155	160
SS321	116
SS322	116
SS324	116
SS334	116
SS337	116
SS455	116
SS524	154

To Be Replaced	ECG Replacement
SS1123	191
SS1606	159
SS1606A	121
SS1906	159
SS1906A	159
SS1912	154
SS2308	123A
SS2409	213
SS2503	159
SS2503A	159
SS2504	123A
SS3534-4	132
SS3586	133
SS3672	133
SS3694	123A
SS3704	132
SS-3704	133
SS3735	133
SS3935	195A
SS4042	161
SS4312	278
SS6111	154
SS9327	190
SSA43	159
SSA43A	159
SSA43A-1	159
SSA46	159
SSA46A	159
SSA48	159
SSA48A	159
SSD974	116
SSi1120	5804
SSIB0140	156
SSIB0180	156
SSIB0640	156
SSIB0680	156
SSiC0810	5802
SSiC0820	5804
SSiC0840	156
SSiC0840	5806
SSiC0860	5809
SSIC0880	156
SSiC0880	5809
SSiC1110	5802
SSIC1140	156
SSiC1140	5806
SSIC1160	156
SSiC1160	5809
SSIC1180	156
SSiC1180	5809
SSiC1210	5802
SSiC1220	5804
SSIC1240	156
SSiC1240	5806
SSIC1260	156
SSiC1260	5809
SSIC1280	156
SSiC1280	5809
SSiC1660A	5809
SSIC1740	156
SSIC1780	156
SSIC1960A	156
SSiC1960A	5809
SSS201AJ	1171
SSS301AJ	1171
SSS301AP	975
SSS741CJ	941
SSS747CK	947
SSS747CP	947D
SSS747CY	947D
ST01	123A
ST02	123A
ST03	123A
ST04	123A
ST05	123A
ST06	123A
ST-021660	129
ST.082.112.005	123A
ST.082.114.015	123A
ST.082.114.016	199
ST.082.115.015	159
ST-2	6407
ST2	6408
ST2-10	5874
ST2-20	5874
ST2-30	5874
ST2-40	5874
ST2-2517	106
ST2B	116(4)
ST2(GE)	6407
ST-2N6558	191
ST-2SB568C	292
ST-2SC383W	199
ST-2SC1106	162
ST-2SC1514	198
ST-2SD478C	291
ST2T003	199
ST3-10	5990
ST3-20	5990
ST3-30	5990
ST3-40	5990
ST-4	6405
ST4-10	5990
ST4-20	5990
ST4-30	5990
ST4-40	5990
ST9	108
ST10	108
ST11	107
ST12	108
ST-12	116
ST13	108
ST14	108
ST-14	116
ST15	108

To Be Replaced	ECG Replacement
ST16	116
ST18	125
ST25A	123A
ST25B	123A
ST25C	123A
ST28A	102A
ST-28A	176
ST28B	102A
ST-28B	100
ST28C	102A
ST-28C	100
ST29	108
ST30	108
ST31	108
ST32	108
ST33	108
ST34	108
ST35	108
ST37C	102A
ST-37C	100
ST37D	102A
ST-37D	100
ST37E	102A
ST37O	176
ST39	5007A
ST40	108
ST-41	5005A
ST41	108
ST42	108
ST43	108
ST44	108
ST45	108
ST47	112
ST50	123A
ST51	123A
ST53	123A
ST54	123A
ST55	123A
ST56	123A
ST57	123A
ST58	123A
ST59	123A
ST60	108
ST61	108
ST62	108
ST63	123A
ST64	123A
ST70	108
ST71	108
ST72	108
ST80	108
ST82	108
ST101	181
ST-103	126
ST106	105
ST-106	105
ST107	105
ST-107	105
ST108	105
ST-108	105
ST109	105
ST-109	105
ST110	105
ST-110	105
ST111	105
ST-111	105
ST112	105
ST-112	105
ST122	102A
ST-122	102A
ST123	102A
ST-123	102A
ST/123/CR	519
ST-125	160
ST129-1	159
ST/146/CR	519
ST150	123A
ST151	123A
ST152	123A
ST153	123A
ST154	123A
ST155	123A
ST156	123A
ST157	123A
ST160	123A
ST161	123A
ST162	123A
ST163	123A
ST172	101
ST-172	101
ST175	123A
ST176	123A
ST177	123A
ST178	123A
ST180	123A
ST181	123A
ST182	123A
ST-201	128
ST213	128
ST-213	128
ST/217/Q	123A
ST235	121
ST-235	121
ST250	123A
ST251	123A
ST 254 Q	128
ST301	102A
ST-301	102A
ST302	102A
ST-302	102A
ST303	102A
ST304	102A
ST-304	102A
ST332	102A
ST-332	102A

To Be Replaced	ECG Replacement
ST370	102A
ST-370	100
ST382	102A
ST402	192
ST403	123A
ST415	108
ST501	123A
ST502	123A
ST503	123A
ST504	123A
ST903	108
ST904	108
ST904A	108
ST905	108
ST910	108
ST1026	108
ST1050	108
ST1051	108
ST1242	123A
ST-1242	123A
ST1243	123A
ST-1243	123A
ST1244	123A
ST-1244	123A
ST1287	288
ST1290	123A
ST-1290	123A
ST1336	108
ST1410	283
ST1411	283
ST1423	283
ST1424	283
ST1425	283
ST1430	283
ST1431	283
ST1504	192
ST1505	192
ST1506	123A
ST1607	123A
ST1694	108
ST2040P	116
ST-2040P	116
ST3030	108
ST3031	108
ST4150	128
ST4201	128
ST4202	128
ST4203	128
ST4204	128
ST4341	192
ST5060	123A
ST5061	192
ST5641	161
ST6110	159
ST6120	108
ST6510	107
ST6511	123A
ST6512	123A
ST6573	128
ST6574	128
ST7100	199
ST8014	159
ST8033	159
ST8033A	159
ST8034	159
ST8034A	159
ST8035	159
ST8035A	159
ST8036	159
ST8036A	159
ST8065	159
ST8065A	159
ST8190	159
ST8500	159
ST8500A	159
ST8509	159
ST8509A	159
ST22546-1	519
ST27020	153
ST29045	180
ST29046	180
ST29047	180
ST32012-0037	519
ST33026	199
ST61000	193
ST72039	129
ST72040	129
ST84027	198
ST84028	198
ST84029	198
ST984539-006	9948
ST-BU208	165
ST-LM2682	128
ST-MJE9742	157
ST-MPS9433	123A
ST-MPS9682J	159
ST-MPS9700D	123A
ST-MPS9700E	123A
ST-MPS9700F	123A
ST-MPS9750D	159
ST-MPS9750F	159
STA7604	327
STA8341	283
STA9364	162
STB01-02	177
STB4	5002A
STB576	177
STBOL-02	116
STC1035	130
STC-1035	130
STC1035A	130
STC-1035A	130
STC1036	130
STC-1036	130
STC1036A	130

To Be Replaced	ECG Replacement
STC-1036A	130
STC1080	130
STC1081	130
STC1082	130
STC1083	130
STC1084	130
STC-1085	130
STC1094	181
STC1300	152
STC1336	192
STC1800	186
STC1850	152
STC1860	152
STC1862	186
STC2220	181
STC2221	181
STC2224	181
STC2225	181
STC2228	181
STC2229	181
STC4252	130
STC4253	130
STC4254	130
STC4255	130
STC-4401	175
STC4401	175
STC5202	153
STC5203	153
STC5205	153
STC5206	153
STC5303	153
STC5610	129
STC5611	129
STC5612	129
STC5805	153
STC5806	153
STD9007	186
STE400	108
STH7251	197
STK-011	1024
STK013	1212
STK014	1252
STK-015	1027
STK-018	1139
STK-020	1025
STK-020B	1025
STK-020D	1025
STK-020E	1025
STK-020F	1025
STK-020K	1025
STK-020L	1025
STK022	1090
STK-025	1090
STK025	1090
STK-025G	1090
STK-032	1090
STK-036	1148
STK054	1028
STK-056	1028
STK-056A	1028
STK401	1151
STK-401	1151
STK413	1220
STK415	1220
STK433	1218
STK-433	1218
STK435	1218
STK437	1219
STK439	1219
STM73Q	159
STM101	500A
STPT260	3036
STR101(Elcom)	5640
STR103(Elcom)	5640
STR106	5663
STR106(Elcom)	5673
STR117	5682
STR117(Elcom)	5673
STR125	5682
STR130	5663
STR201(Elcom)	5641
STR202(Elcom)	5641
STR203(Elcom)	5641
STR206	5663
STR206(Elcom)	5673
STR208	5663
STR208(Elcom)	5663
STR217	5683
STR217(Elcom)	5673
STR225	5683
STR225(Elcom)	5673
STR230	5663
STR230(Elcom)	5673
STR403(Elcom)	5642
STR406	5665
STR406(Elcom)	5675
STR408	5665
STR408(Elcom)	5665
STR411(Elcom)	5616
STR417	5685
STR417(Elcom)	5675
STR418(Elcom)	5635
STR425	5685
STR425(Elcom)	5685
STR430	5665
STR430(Elcom)	5675
STS104	280
STS105	280
STS106	280
STS107	280
STS401	162
STS402	283
STS403	283
STS409	283
STS410	283

To Be Replaced	ECG Replacement
STS413	162
STS430	162
STS431	162
STT4451	186
STV-3H	605
STX0010	175
STX0011	129
STX0013	184
STX0014	130
STX0015	124
STX0016	175
STX0020	185
STX0026	184
STX0027	130
STX0028	154
STX0029	153
STX0030	153
STX0032	130
STX0033	126
STX0034	126
STX0036	160
STX0085	160
STX0087	160
STX0089	160
STX0090	160
STX0096	102A
STX0099	102A
STX0104	102A
STX0105	102A
STX0110	102A
STX0114	102A
STX0121	158
STX0123	102A
STX0224	158
STX0260	102A
STX0263	102A
STX0264	102A
STX0265	102A
STX0268	102A
STX0269	102A
STX3326	196
STX49007	941M
SU5	145A
SU-31	109
SU44	6409
SU110	6401
SU2076	133
SU2077	133
SU2080	133
SU2081	133
SUC650	137A
SUM6010	137A
SUM6011	137A
SUM6020	137A
SUM6021	137A
SV-01A	116
SV01A	116
SV-01B	116
SV-02	605
SV02A	116
SV-02(rectifier)	116
SV-03	605
SV03	606
SV-04	605
SV04	607
SV-05	116
SV-3	177
SV-3A	605
SV-3B	177
SV-3C	177
SV-4A	605
SV5KV	540
SV-7	138A
SV-8	177
SV-9	601
SV-9(Diode)	177
SV-9(Rectifier)	139A
SV-9(Zener)	139A
SV28	5063A
SV29	5065A
SV30	109
SV30(Zener)	5066A
SV-31	109
SV-31(DIODE)	109
SV31(Transistor)	158
SV31(Zener)	134A
SV32	5067A
SV33	5068A
SV34	5069A
SV36	136A
SV37	137A
SV38	5071A
SV39	138A
SV40	5072A
SV41	139A
SV42	140A
SV43	5074A
SV44	142A
SV45	143A
SV46	145A
SV47	5075A
SV48	5077A
SV49	5079A
SV50	5080A
SV51	5081A
SV52	146A
SV53	5084A
SV54	147A
SV121	135A
SV122	135A
SV123	136A
SV124	5070A
SV127	138A
SV133	140A

To Be Replaced	ECG Replacement
SV134	5074A
SV135	142A
SV136	143A
SV137	144A
SV138	145A
SV-138A	145A
SV139	5075A
SV141	5076A
SV142	5077A
SV143	5078A
SV144	5079A
SV168	5080A
SV169	5081A
SV172	5083A
SV910	5187AK
SV1017	142A
SV1019	144A
SV1020	145A
SV-1020A	145A
SV1238	116
SV1238E	116
SV-1238E	116
SV2052	5209AK
SV2058	5190AK
SV3144	5002A
SV4012	142A
SV4012A	142A
SV4014	144A
SV4014A	144A
SV4015	145A
SV4015A	145A
SV-4015A	145A
SV4018	5027A
SV4018A	5027A
SV4027	146A
SV4027-6	146A
SV4027A	146A
SV4027A-6	146A
SV4033	147A
SV4033A	147A
SV4055	148A
SV4055A	148A
SV4062	149A
SV4062A	149A
SV4082	150A
SV4082A	150A
SV11021	141A
SV12388	116
SV-12388	116
SV12388E	116
SV-KB262	605
SVC0053	614
SVC-101	610
SVC101	614
SVC-201	614
SVC201	614
SVC-201	614
SVC625	137A
SVC650	137A
SVC1125	141A
SVC1150	141A
SVD02Z8.2A	5072A
SVD02Z9.5A	139A
SVD0A79	109
SVD-1S1717	139A
SVD1S1717	139A
SVD1S1850	116
SVD-1S1850R	116(2)
SVD10D-1	116
SVD12B2B1P-M	166
SVD20A70	109
SVD20A79	109
SVDAS2HB10	156
SVDMA26	117
SVDMA26-1	109
SVDOA70	109
SVDOA90	109
SVDS1RB10	166
SVDS-1S1850	116(2)
SVDSC20	109
SVDVD1121	177
SVDVD1223	116
SVI-LA3300	1005
SVI-LD3120	1019
SVI-ST020F	1025
SVI-STK018	1139
SVI-STK020F	1025
SVM61	137A
SVM111	141A
SVM601	137A
SVM602	137A
SVM605	137A
SVM1105	141A
SVM6010	137A
SVM6011	137A
SVM6020	137A
SVM6021	137A
SVM11020	141A
SW0.5A	116
SW01	142A
SW05	116
SW-05	5800
SW-05-005	116
SW05-01	116
SW05-02	116
SW-05-02	116
SW05A	116
SW05B	116
SW05C	125
SW05D	125
SW05S	116
SW05SS	116
SW05V	116
SW-05V	116
SW1	156

To Be Replaced	ECG Replacement
SW-1	156
SW-1-01	156
SW-1-02	156
SW-1A	116
SW1C	125
SW1D	125
SW705-2M	9093
SW705-2P	9093
SW706-2M	9099
SW706-2P	9099
SW708-2M	9094
SW708-2P	9094
SW709-2M	9097
SW709-2P	9097
SW930-2M	9930
SW930-2P	9930
SW932-2M	9932
SW932-2P	9932
SW933-2M	9933
SW933-2P	9933
SW935-2M	9935
SW935-2P	9935
SW936-2M	9936
SW936-2P	9936
SW937-2M	9937
SW937-2P	9937
SW941-2M	9941
SW941-2P	9941
SW944-2M	9944
SW944-2P	9944
SW945-2M	9945
SW945-2P	9945
SW946-2M	9946
SW946-2P	9946
SW948-2M	9948
SW948-2P	9948
SW949-2M	9949
SW949-2P	9949
SW950-2M	9950
SW950-2P	9950
SW951-2M	9951
SW951-2P	9951
SW957-2M	9157
SW957-2P	9157
SW958-2M	9158
SW958-2P	9158
SW961-2M	9961
SW961-2P	9961
SW962-2P	9962
SW963-2M	9963
SW963-2P	9963
SW1808-2M	9808
SW1808-2P	9808
SW4066B	4066B
SW7481	7481
SW-10548	9937
SW-10549	9158
SWC	125
SWD	125
SX6.8	5120A
SX8.2	5122A
SX9.1	5124A
SX10	5125A
SX11	5126A
SX12	5127A
SX13	5128A
SX15	5130A
SX16	5131A
SX18	5133A
SX20	5135A
SX22	5136A
SX24	5137A
SX27	5139A
SX30	5141A
SX33	5142A
SX36	5143A
SX39	5144A
SX43	5145A
SX47	5146A
SX51	5147A
SX55	123A
SX56	5148A
SX-58Y	133
SX60M	154
SX61	129
SX61M	159
SX61MA	159
SX62	5150A
SX68	5151A
SX75	5152A
SX82	5153A
SX91	5155A
SX100	5156A
SX110	5157A
SX120	5158A
SX408	229
SX623	116
SX631	116
SX633	116
SX641	116
SX642	116
SX-642	116
SX643	116
SX644	116
SX645	116
SX751	5872
SX752	5874
SX753	5878
SX754	5878
SX780	177
SX-990	109
SX3001	108
SX3702	159
SX3702A	159
SX3709	123A

To Be Replaced	ECG Replacement
SX3711	123A
SX3819	132
SX3825	108
SX-3825	108
SX3826	229
SX3827	108
SY20	5196A
SY22	5197A
SY24	5198A
SY27	5200A
SY30	5202A
SY61583	176
SYC-201	614
SYL101	101
SYL-101	101
SYL102	101
SYL-102	101
SYL103	103
SYL-103	103A
SYL104	103
SYL-104	103A
SYL105	100
SYL-105	100
SYL106	100
SYL-106	100
SYL107	102
SYL-107	102A
SYL107A	102A
SYL108	102
SYL-108	102A
SYL108A	102A
SYL109	121
SYL128	110
SYL152	123
SYL-152	103A
SYL160	100
SYL-160	100
SYL792	101
SYL1182	123A
SYL-1182	123A
SYL1279	101
SYL1297	103
SYL-1297	101
SYL1310	101
SYL-1310	101
SYL1311	101
SYL-1311	101
SYL1312	101
SYL1313	101
SYL1326	101
SYL1327	101
SYL1329	103
SYL-1329	103A
SYL1380	101
SYL1396	103
SYL-1396	103A
SYL1408	101
SYL1430	102
SYL1454	101
SYL1468	103A
SYL1524	103
SYL-1524	103A
SYL1535	102
SYL1536	103
SYL1537	101
SYL1538	103
SYL1539	103
SYL1547	103
SYL1583	102
SYL-1583	102A
SYL1583A	102A
SYL1588	100
SYL1591	101
SYL1608	100
SYL-1608	100
SYL1617	101
SYL1655	102
SYL1655A	102A
SYL1665	102
SYL1665A	102A
SYL1668	102
SYL-1668	102A
SYL1668A	102A
SYL1690	100
SYL1697	100
SYL1717	100
SYL1750	101
SYL1941	101
SYL1987	101
SYL-1987	101
SYL2120	100
SYL2130	101
SYL-2130	101
SYL2131	101
SYL-2131	101
SYL2132	101
SYL-2132	101
SYL2134	103
SYL-2134	103A
SYL2135	103
SYL-2135	103A
SYL2136	103
SYL-2136	103A
SYL2189	160
SYL2245	101
SYL-2245	101
SYL2246	101
SYL-2246	101
SYL2247	100
SYL2248	102
SYL-2248	100
SYL2248A	102A
SYL2249	102
SYL-2249	100
SYL2249A	102A

To Be Replaced	ECG Replacement
SYL2250	100
SYL-2250	100
SYL2300	102
SYL-2300	108
SYL2300A	102A
SYL2650	103
SYL3460	123A
SYL3613	102
SYL3613A	102A
SYL4131	108
SYL-4131	108
SYL4275	159
SYL4280	128
SYL4315	103
SYL-4315	103A
SYL4339	101
SZ2.4	5061A
SZ2.7	5063A
SZ3.6	134A
SZ4.7	135A
SZ4.7B	5069A
SZ5	135A
SZ5.1	135A
SZ5.1B	5116A
SZ5.6	136A
SZ5.6B	136A
SZ6.2	137A
SZ6.2A	137A
SZ6.2B	137A
SZ6.8B	5071A
SZ-7	138A
SZ7	5014A
SZ7.5B	138A
SZ8.2B	5072A
SZ9	139A
SZ-9	139A
SZ9.1	139A
SZ9.1B	139A
SZ10	140A
SZ10B	140A
SZ10C	5125A
SZ11	5074A
SZ11B	5074A
SZ11C	5126A
SZ11.0	141A
SZ12	142A
SZ12B	142A
SZ12C	5127A
SZ12.0	142A
SZ13	143A
SZ13B	143A
SZ13C	5128A
SZ13.0	143A
SZ14	144A
SZ15	145A
SZ-15B	145A
SZ15B	145A
SZ15C	5130A
SZ15.0	145A
SZ16B	5075A
SZ16C	5131A
SZ18	5027A
SZ18B	5077A
SZ18C	5133A
SZ20	5029A
SZ20B	5079A
SZ20C	5135A
SZ22B	5080A
SZ22C	5136A
SZ24B	5081A
SZ24C	5137A
SZ27B	146A
SZ27C	5139A
SZ30B	5084A
SZ30C	5141A
SZ33B	147A
SZ33C	5142A
SZ36B	5085A
SZ56A	5117A
SZ62A	5119A
SZ68A	5120A
SZ75A	5121A
SZ82A	5122A
SZ91A	5124A
SZ119	5081A
SZ150	145A
SZ-150	145A
SZ200	135A
SZ200-5	135A
SZ-200-8	139A
SZ200-8.2	5072A
SZ-200-9V	139A
SZ-200-13	143A
SZ-200-15	145A
SZ-200-15A	145A
SZ671-B	142A
SZ671-G	142A
SZ671-O	5074A
SZ671-W	5074A
SZ961-B	145A
SZ961-R	144A
SZ961-V	143A
SZ961-Y	144A
SZ1200	148A
SZ11763	151A
SZ13447	5009A
SZ13448	5014A
SZ13450	5066A
SZ13451	136A
SZ13452	137A
SZ13453	139A
SZ13454	140A
SZ13455	146A
SZ13456	5103A
SZ14026	5077A

To Be Replaced	ECG Replacement
SZ-RD6.2EB	137A
SZ-RD11FB	5074A
SZ-RD12EB	142A
SZ-RD12FB	142A
SZ-UZ-12B	142A
SZ-YZ063	137A
SZA13	143A
SZA100	156
SZC9	139A
SZL9	140A
SZL10	5186A
SZT8	142A
SZT9	139A
SZT-9	139A
SZT9	139A
T0003	102A
T0004	102A
T0005	102A
T00014	102A
T-00014	102A
T0012	102A
T0014	102A
T0015	102A
T0031	102A
T0033	102A
T0038	102A
T0039	102A
T0040	102A
T0041	102A
T0051	102A
T01-013	123A
T01-014	123A
T01-022	128
T01-023	159
T01-030	152
T01-044	133
T01-047	199
T01-101	123A
T01-104	123A
T01-105	123A
T033Z3	100
T-065	116
T065	116
T-075	116
T075	116
T0-101	100
T0101	100
T0-102	100
T0102	100
T-0150	116
T0150	116
T0253	314
T0503	314
T01003	314
T02003	314
T03003	314
T04003	314
T-04689	128
T0A1748V	1171
T0A2709P	909D
T0A2709V	909
T0A2741E	941D
T0A2741V	941
T0A2748V	1171
T1-1A6	123A
T1-503	159
T1-503A	159
T1-741	132
T1-743	159
T1-743A	159
T1-744	159
T1-744A	159
T1-752	159
T1-752A	159
T1-906	159
T1A	704
T1A727	222
T1B	703A
T1C22	5663
T1C23	5665
T1C44	5400
T1C45	5401
T1C46	5402
T1C47	5404
T1C54	6407
T1C55	6406
T1C56	6407
T1C57	6406
T1C60	5400
T1C61	5401
T1C62	5402
T1C63	5403
T1C64	5404
T1C106A	5454
T1C106B	5455
T1C106C	5456
T1C106F	5453
T1C106Y	5452
T1C116A	5462
T1C116B	5463
T1C116C	5465
T1C116D	5465
T1C116F	5461
T1C205A	5650
T1C205B	5651
T1C205D	5652
T1C222B	5673
T1C222D	5675
T1C222E	5676
T1C226B	56004
T1C226D	56006
T1C232B	5673
T1C232D	5675
T1C232E	5676
T1C236B	56004

To Be Replaced	ECG Replacement
T1C236D	56006
T1C242B	5673
T1C242D	5675
T1C242E	5676
T1C252B	5683
T1C252D	5685
T1C252E	5686
T1C252M	5687
T1C262B	5683
T1C262D	5685
T1C262E	5686
T1C262M	5687
T1C272B	5693
T1C272D	5695
T1C272E	5697
T1C272M	5697
T1C2420	5677
T1E	722
T1F	748
T1G	109
T1H	710
T1J	718
T1J6G	116
T1K	798
T1L31	3028
T1L220	3020
T1L228-2	3019
T1L302	3050
T1L304	3051
T1L313P	3057
T1M	717
T1M-01	160
T1M-10	160
T1M-11	160
T1N	718
T1P3A	197
T1P4	196
T1P-14	152
T1P14	184
T1P24	152
T1P-24	196
T1P27	157
T1P29	152
T1P29A	152
T1P29B	198
T1P29C	198
T1P29X	152
T1P29XA	196
T1P30	153
T1P30A	153
T1P30B	189
T1P31	184
T1P-31	196
T1P31A	184
T1P-31A	196
T1P-31B	196
T1P31B	184
T1P32	153
T1P32A	153
T1P32B	197
T1P33	182
T1P33A	182
T1P34	183
T1P34A	183
T1P34B	183
T1P36A	183
T1P41	196
T1P41A	196
T1P41B	196
T1P42	197
T1P42A	197
T1P42B	197
T1P47	198
T1P48	198
T1P49	198
T1P120	261
T1P121	261
T1P125	262
T1P126	262
T1P140	270
T1P141	270
T1P142	270
T1P145	271
T1P146	271
T1P147	271
T1P503	175
T1P509	328
T1P510	328
T1P515	328
T1P516	328
T1P536	162
T1P537	283
T1P541	282
T1P561	283
T1P562	283
T1P563	283
T1P640	245
T1P641	245
T1P645	246
T1P646	246
T1P2955	219
T1P3055	130
T1R01	116
T1R02	116
T1R03	116
T1R04	116
T1R05	116
T1R06	116
T1R07	125
T1R08	125
T1R09	125
T1R10	125
T1S03	159
T1S-03	159
T1S03A	159

To Be Replaced	ECG Replacement
T1S04	159
T1S04A	159
T1S5A	159
T1S14	133
T1S18	229
T1S-18	229
T1S22	123A
T1S23	123A
T1S24	108
T1S34	132
T1S37	159
T1S37A	159
T1S38	159
T1S38A	159
T1S42	132
T1S44	123A
T1S45	123A
T1S46	123A
T1S47	123A
T1S48	123A
T1S49	123A
T1S50	159
T1S51	123A
T1S52	123A
T1S53	159
T1S53A	159
T1S54	159
T1S55	123A
T1S56	123A
T1S57	123A
T1S58	457
T1S59	132
T1S60	123A
T1S60A	128
T1S60B	128
T1S60C	128
T1S60D	128
T1S60E	128
T1S60M	128
T1S61	159
T1S61A	159
T1S61B	129
T1S61C	129
T1S61D	129
T1S61E	129
T1S61M	129
T1S62	108
T1S63	108
T1S64	108
T1S71	123A
T1S72	123A
T1S73	467
T1S78	133
T1S79	133
T1S82	186
T1S83	123A
T1S84	108
T1S85	108
T1S86	107
T1S87	107
T1S88	132
T1S-88	132
T1S90	123A
T1S90-2	123A
T1S91	159
T1S91A	159
T1S92	123A
T1S92-BLU	123A
T1S92-GRN	123A
T1S92-GRY	123A
T1S92M	128
T1S92-VIO	123A
T1S92-YEL	123A
T1S93	159
T1S93A	159
T1S93-BLU	159
T1S93-GRN	159
T1S93-GRY	159
T1S93M	129
T1S93-VIO	159
T1S93-YEL	159
T1S94	108
T1S96	123A
T1S97	107
T1S-97	199
T1S98	108
T1S98A	108
T1S99	107
T1S100	154
T1S101	154
T1S102	154
T1S103	154
T1S104	159
T1S105	108
T1S106	194
T1S107	128
T1S108	107
T1S109	195A
T1S110	195A
T1S111	195A
T1S112	159
T1S113	123A
T1S114	123A
T1S412	107
T1SZ8	108
T1T	755
T1V	917
T1W	771
T1X-M14	161
T1X-M15	161
T1X-M16	161
T1XM15	108
T1XM17	108
T1XS11	464
T1XS67	464

To Be Replaced	ECG Replacement
T1Y	917
T1Z	722
T2A	722
T2A(I.C.)	798
T2A(Motorola)	722
T2A(Transistor)	172A
T2C	722
T2D	723
T2E	753
T2F	718
T2G	723
T2G(Diode)	109
T2G(I.C.)	723
T2J	708
T2L	796
T2M	781
T2N	789
T2N1	789
T2N-1	789
T2R	778
T2T	788
T2T-1	788
T2T-2	788
T2V	736
T3/2	116
T3A	743
T3A-1	743
T3A-2	743
T3B	941M
T3G	109
T3N0.5P0B	5461
T3N0.6000	5470
T3N1P0B	5462
T3N2P0B	5463
T3N4P0B	5465
T3N50	5470
T3N50C0B	5470
T3N/50T	5470
T3N100	5471
T3N100C0B	5471
T3N/100T	5471
T3N200	5472
T3N200C0B	5472
T3N/200T	5472
T3N300	5473
T3N300C0B	5473
T3N/300T	5473
T3N400	5474
T3N400C0B	5474
T3N/400T	5474
T3N500	5475
T3N500C0B	5475
T3N/500T	5475
T3N600	5476
T3N600C0B	5476
T3N/600T	5476
T3N1000	5471
T3N2000	5472
T3N3000	5473
T3N4000	5474
T3N5000	5475
T3N6000	5476
T4.5/50(Blue)	5481
T4.5/50C0R	5481
T4.5/100(Brown)	5482
T4.5/100C0R	5482
T4.5/200C0R	5483
T4.5/200(Green)	5483
T4.5/300C0R	5484
T4.5/300(Yellow)	5484
T4.5/400C0R	5485
T4.5/400(White)	5485
T4F	1115
T6N100C0B	5502
T6N200C0B	5504
T6N300C0B	5506
T6N400C0B	5507
T6N500C0B	5508
T7	109
T8/2	116
T8G	109
T8L05A	977
T8N100C0B	5502
T8N200C0B	5504
T8N300C0B	5506
T8N400C0B	5507
T8N500C0B	5508
T9	109
T9G	109
T11	109
T12	109
T12-1	177
T12-2	177
T12A	177
T12B	177
T12C	177
T12G	109
T12N100C0B	5542
T12N200C0B	5543
T12N300C0B	5544
T12N400C0B	5545
T12N500C0B	5546
T12N600C0B	5547
T13	109
T-13	116
T13G	109
T-13G	116
T14	109
T-14	116
T14G	109
T-14G	116
T15N400C0A	5545
T15N400C0B	5545
T15N500C0A	5546
T15N500C0B	5546

To Be Replaced	ECG Replacement
T15N600C0A	5547
T15N600C0B	5547
T15.1N100C0B	5542
T15.1N200C0B	5543
T15.1N300C0B	5544
T15.1N400C0B	5545
T15.1N500C0B	5546
T15.1N600C0B	5547
T16	177
T16N400C0B	5545
T16N500C0B	5546
T16N600C0B	5547
T17	109
T17-A	138A
T17A	138A
T17N200C0B	5543
T17N400C0B	5545
T17N500C0B	5546
T17N600C0B	5547
T18	109
T20	109
T20G	109
T20N0.6C00	5542
T20N1C00	5542
T20N2C00	5543
T20N3C00	5544
T20N4C00	5545
T20N5C00	5546
T20N6C00	5547
T21	109
T21G	109
T22	109
T22G	109
T-22G	116
T23	109
T-23	102A
T-23-71	223
T23-93	196
T23-94	128
T23G	109
T24G	109
T26G	109
T-26G	116
T27G	109
T-33Z1	102A
T33Z1	102A
T-33Z3	102A
T33Z3	102A
T35A-5	123A
T39	102A
T-39	102A
T39	159
T40	106
T45	102A
T46	102A
T-46	100
T47	102A
T-47	100
T48	102A
T-48	100
T50	102A
T-50	116
T59	102A
T60	102A
T61	102A
T72	102A
T74	102A
T76	123A
T77	102A
T78	102A
T-78	100
T81	102A
T-81	102A
T82	102A
T83	102A
T84	102A
T87	102A
T95	102A
T-95	102A
T99	102A
T-99	160
T100	102A
T-100	116
T101	102A
T-101	121
T102A	102A
T108	102A
T108(IBM)	213
T109	102A
T-109	100
T112	159
T116	102A
T-116	100
T126	102A
T-126	102A
T127	102A
T-127	121
T129	102A
T-129	102A
T130	102A
T-130	102A
T-131	158
T131	158
T139	104
T140A0	5481
T140A1	5482
T140A2	5483
T140A3	5484
T140A4	5485
T142	121
T143	123A
T151	177
T152	177
T153	177

To Be Replaced	ECG Replacement
T154	177
T155	177
T156	116
T157	123A
T158	123A
T159	116
T160	102A
T163	160
T-163	160
T170	123A
T171	123A
T185	123A
T200	116
T-200	116
T201AV	1171
T-203	107
T222	162
T225	162
T-235	121
T235A013-2	123A
T237	123A
T246	129
T-246	159
T247	128
T-251	159
T253	160
T253(SEARS)	160
T255	123A
T-255	123A
T256	123A
T-256	123A
T257	124
T261	124
T271	175
T276	159
T277	123A
T278	160
T-278	160
T279	160
T-279	160
T280	160
T280(SEARS)	126
T281	160
T281(SEARS)	126
T282	160
T282(SEARS)	102A
T287	157
T291	123A
T-291	128
T300	116
T-300	116
T301AV	1171
T308	108
T309	234
T309K	309K
T327	123A
T327-2	123A
T328	123A
T334-2	129
T336-2	128
T339	123A
T-339	128
T340	159
T-340	129
T342	123A
T-342	184
T344	184
T-344	184
T345	185
T-345	185
T348	160
T-348	126
T367	160
T368	160
T370	179
T373	160
T374	160
T381	161
T381(SEARS)	161
T386	123A
T386(SEARS)	108
T396	185
T-396	185
T399	123A
T-399	123A
T400	116
T-400	116
T416-16(Sears)	123A
T417	123A
T422	188
T423	189
T449	160
T449(Sears)	126
T450	116
T-450	116
T452	128
T457-16	123A
T457-16(Sears)	123A
T458-16	123A
T459	129
T459(SEARS)	123A
T460	123A
T460(SEARS)	159
T461-16	123A
T461-16(SEARS)	123A
T462	123A
T462(SEARS)	123A
T464	222
T472	123A
T472(SEARS)	123A
T475	129
T475(SEARS)	159
T-481	154
T481(SEARS)	154
T-482	129

To Be Replaced	ECG Replacement
T482(SEARS)	159
T-483	108
T483(SEARS)	123A
T-484	108
T484(SEARS)	123A
T485(Sears)	123A
T-486	108
T486(SEARS)	123A
T500	116
T-500	116
T550	116
T-550	116
T576-1	161
T597-1	159
T600	116
T-600	116
T611-1	152
T611-1(RCA)	184
T612-1	152
T612-1(RCA)	184
T615A002	123A
T615A006-1	123A
T626(SEARS)	165
T650	116
T-650	116
T650(Transistor)	123A
T800	125
T800X	125
T811	160
T814	158
T815	158
T841	181
T842	181
T843	181
T844	181
T 900	159
T-1000	125
T1000	158
T-1000X	125
T1000X	125
T1001	102A
T1002	102A
T1002A	102A
T1003	102A
T1003-521	108
T1004	102A
T1005	102A
T1006	102A
T1007	102A
T1007(Zenith)	199
T1008	102A
T1008-834	123A
TJ009	102A
T1010	102A
T1011	160
T1012	160
T1013	102A
T1023	102A
T1028	160
T1032	160
T1033	160
T1034	160
T1036	102A
T1037	102A
T1038	160
T1040	104
T1041	104
T1042	102A
T1043	102A
T1046	102A
T1047	102A
T1056	102A
T1065	116
T1156	7400
T1157	7410
T1158	7420
T1166	160
T1167	121
T1168	121
T1202	102A
T1202(GE)	161
T1203	102A
T1208	132
T1224	160
T1225	160
T1232	160
T1233	160
T1250	160
T1251	100
T1275	129
T1276	129
T1289	100
T1291	100
T1298	160
T1299	160
T1300	102A
T1305	160
T1306	160
T1310	102A
T1312	100
T1314	160
T1322	100
T1326	100
T1327	102A
T1328	102A
T1334	102A
T1340A3H	128
T1340A3I	123A
T1340A3J	123A
T1340A3K	123A
T1340A31	123A
T1341A3K	199
T1342	102A
T1346	102A
T1352	102A

To Be Replaced	ECG Replacement
T1363	102A
T-1363	126
T1364	102A
T-1364	126
T1366	104
T1366A	104
T1367	104
T1367A	104
T1368	104
T1368A	104
T1369	104
T1369A	104
T1370	104
T1370A	104
T1387	160
T1388	160
T1389	160
T1390	160
T1391	160
T1400	160
T1401	160
T1402	160
T1403	160
T1408	229
T1413	123A
T1414	123A
T1415	123A
T1416	123A
T-1416	123A
T1417	123A
T1450	116
T1454	160
T1459	160
T1460	126
T-1460	126
T1461	160
T1474	100
T1486	152
T1487	152
T1495	123A
T1510	100
T1524	126
T1524BRN	126
T1524BRN/RED	126
T1546	102A
T1548	160
T1559	102A
T1573	102A
T1574	102A
T1577	102A
T1583	102A
T1593	102A
T1594	102A
T1595	102A
T1596	102A
T1597	102A
T1598	102A
T1599	102A
T1601	121
T1602	121
T1618	160
T1642B	123A
T1654	126
T1654BLU	126
T1657	160
T1679	123A
T1690	160
T1691	160
T1692	160
T1706	128
T1706A	128
T1706B	128
T1706C	128
T1710J	910D
T1710V	910
T1711J	911D
T1711V	911
T1723J	923D
T1723V	923
T1737	160
T1738	160
T1740	102A
T1746	123A
T1746A	123A
T1746B	123A
T1746C	123A
T1747V	947
T1748	123A
T1748A	123A
T1748B	123A
T1748C	123A
T1788	160
T1802	123A
T1802A	123A
T1802B	123A
T1804	123A
T1805	123A
T1808	129
T1808A	129
T1808B	129
T1808C	129
T1808D	129
T1808E	129
T1810	123A
T1810B	123A
T1811	128
T1811E	128
T1811G	128
T1814	160
T1831	160
T1877	100
T-1877	100
T1902	100
T1903	102A
T1904	102A

To Be Replaced	ECG Replacement
T1909	123A
T1961	102A
T2015	160
T2016	160
T2017	160
T2019	160
T2020	160
T2021	160
T2022	160
T2024	160
T2025	160
T2026	160
T2028	160
T-2028	160
T2029	160
T-2029	160
T2030	160
T-2030	160
T2038	100
T-2038	100
T2039	100
T-2039	100
T2040	100
T-2040	100
T2062	783
T2091	100
T-2091	100
T2122	100
T-2122	102
T2159	102A
T2172	100
T2173	100
T2191	160
T2256	100
T2257	100
T2258	100
T2259	100
T2260	100
T2261	100
T2300A	5650
T2300B	5651
T2300D	5652
T2300F	5650
T2301A	5650
T2301B	5651
T2301D	5652
T2302A	5650
T2302B	5651
T2302D	5652
T2303A	5640
T2303B	5640
T2303D	5642
T2303F	5640
T2303M	5643
T2322	126
T2323	126
T2324	126
T2357	106
T2364	160
T2379	160
T2384	160
T2439	102A
T-2439	100
T2440	102A
T-2440	100
T2441	102A
T-2441	100
T2446	123A
T2500B	56004
T2500D	56006
T2515	102A
T2517	102A
T2634	108
T2700B	5624
T2700D	5626
T2709J	909D
T2709V	909
T2710B	5624
T2710D	5626
T2741J	941D
T2741V	941
T2788	160
T2800B	56004
T2800C	56006
T2800D	56006
T2800E	56008
T2800M	56008
T2801B	5633
T2801C	5634
T2801D	5635
T2801DF	5636
T2801E	5636
T2802B	5633
T2802C	5634
T2802D	5635
T2802E	5636
T2850A	56004
T2850B	56004
T2850D	56006
T2878	160
T2896	160
T2945	160
T2946	160
T3005	102A
T3321	102A
T-3321	102A
T3322	102A
T-3322	102A
T3530	108
T3535	108
T3536	108
T3539	108
T3565	123A
T3568	107
T3568(RCA)	108

To Be Replaced	ECG Replacement
T3570	159
T3570A	159
T3601	123A
T3601(RCA)	107
T4110M	5677
T4111M	5677
T4121M	5677
T 4205 L1	128
T4590	110
T-4590	116
T4706D	5675
T6028	126
T-6028	126
T6029	126
T-6029	126
T6030	126
T-6030	126
T6031	126
T-6031	126
T6032	126
T-6032	126
T6058	160
T6411B	5693
T6411D	5695
T6411M	5697
T6420B	56022
T6565	123A
T7400B1	7400
T7400D1	7400
T7401B1	7401
T7401D1	7401
T7402B1	7402
T7402D1	7402
T7403B1	7403
T7403D1	7403
T7404B1	7404
T7404D1	7404
T7405B1	7405
T7405D1	7405
T7406B1	7406
T7406D1	7406
T7407B1	7407
T7407D1	7407
T7408B1	7408
T7408D1	7408
T7409B1	7409
T7409D1	7409
T7410B1	7410
T7410D1	7410
T7416B1	7416
T7416D1	7416
T7417B1	7417
T7417D1	7417
T7420B1	7420
T7420D1	7420
T7426B1	7426
T7426D1	7426
T7428B1	7428
T7428D1	7428
T7430B1	7430
T7430D1	7430
T7433B1	7433
T7433D1	7433
T7440B1	7440
T7440D1	7440
T7441AB1	7441
T7441AD1	7441
T7442B1	7442
T7442D1	7442
T7443B1	7443
T7443D1	7443
T7444B1	7444
T7444D1	7444
T7450B1	7450
T7450D1	7450
T7451B1	7451
T7451D1	7451
T7453B1	7453
T7453D1	7453
T7454B1	7454
T7454D1	7454
T7460B1	7460
T7460D1	7460
T7472B1	7472
T7472D1	7472
T7473B1	7473
T7473D1	7473
T7474B1	7474
T7474D1	7474
T7475B1	7475
T7475D1	7475
T7476B1	7476
T7476D1	7476
T7481B1	7481
T7481D1	7481
T7483B1	7483
T7483D1	7483
T7486B1	7486
T7486D1	7486
T7490B1	7490
T7490D1	7490
T7492B1	7492
T7492D1	7492
T7493B1	7493A
T7493D1	7493A
T9011A1C	123A
T9011A1G	123A
T9011AZ	123A
T9011CD	108
T9011EF	108
T9011G	108
T9011GEF	108
T9011GH	108
T9011H	108

To Be Replaced	ECG Replacement
T9011HEF	108
T9011I	108
T9011J	108
T9016F	108
T9016H	108
T9418	293
T9423	229
T9468	294
T9631	128
T9681	159
T10010	102A
T-10010	519
T10085	102A
T10144	116
T10175	116
T10185	116
T10195	166
T10453	116
T11618	102A
T13000	102A
T13015	128
T13029	121
T21237	109
T21238	109
T21271	109
T21312	116
T21313	109
T21333	116
T21334	139A
T21507	116
T21600	177
T21602	116
T21638	117
T21639	139A
T21649	116
T21679	116
T30155	117
T30155-001	116
T30155-1	116
T42692-001	116
T42692-1R	116
T50339A	102A
T50631	102A
T50818	126
T50931B	102
T50933B	158
T50944	100
T51573A	102
T52054	126
T52147	100
T52147Z	100
T52148Z	100
T-52148Z	100
T52149	100
T-52149	100
T52149Z	100
T-52149Z	100
T52150	102A
T-52150	102A
T52150Z	102A
T-52150Z	102A
T52151	102A
T-52151	102A
T52151Z	102A
T-52151Z	102A
T52159	102A
T59235A	123A
T59247	102A
T59249	102A
T59276	101
T59277	101
T74107B1	74107
T74107D1	74107
T74121B1	74121
T74121D1	74121
T74122B1	74122
T74122D1	74122
T74123B1	74123
T74123D1	74123
T74180B1	74180
T74180D1	74180
T74192B1	74192
T74192D1	74192
T74193B1	74193
T74193D1	74193
T89412	911
T152148	100
T-152148	100
T164213	128
T1003521	108
T1004671	123A
T1008834	123A
T400001006	5501
T400001008	5501
T400001606	5521
T400001608	5521
T400002206	5541
T400002208	5541
T400011006	5502
T400011008	5502
T400011606	5522
T400011608	5522
T400012206	5542
T400012208	5542
T400021006	5504
T400021008	5504
T400021606	5524
T400021608	5524
T400022206	5543
T400022208	5543
T400031006	5506
T400031008	5506
T400031606	5526
T400031608	5526
T400032206	5544

To Be Replaced	ECG Replacement
T400032208	5544
T400041006	5507
T400041008	5507
T400041606	5527
T400041608	5527
T400042206	5545
T400042208	5545
T400051006	5508
T400051008	5508
T400051606	5528
T400051608	5528
T400052206	5546
T400052208	5546
T400061006	5529
T400061008	5529
T400061606	5529
T400061608	5529
T400062206	5547
T400062208	5547
T400071006	5530
T400071008	5530
T400071606	5530
T400071608	5530
T400081006	5531
T400081008	5531
T400081606	5531
T400081608	5531
T-E0137	358
T-E0317	358
T-E01029D	116
T-E1011	116
T-E1014	109
T-E1024	116
T-E1024C	116
T-E1024D	116
T-E1029	507
T-E1031	109
T-E1042	166
T-E1050	116
T-E1061	113
T-E1061A	113
T-E1064	116
T-E1068	142A
T-E1077	142A
T-E1078	116
T-E1078A	116
T-E1080	116
T-E1086	113
T-E1086A	113
T-E1088	116(3)
T-E1089	116
T-E1090	116
T-E1095	118
T-E1097	116
T-E1098	177
T-E1102	116
T-E1102A	116
T-E1105	110
T-E1106	142A
T-E1107	119
T-E1108	507
T-E1118	177
T-E1119	177
T-E1121	177
T-E1124	116
T-E1133	116
T-E1138	116
T-E1140	142A
T-E1144	116
T-E1145	506
T-E1146	506
T-E1148	116
T-E1153	506
T-E1155	116
T-E1157	116
T-E1171	116
T-E1176	116
T-E1177	110
T-H2SC313	108
T-H2SC387	108
T-H2SC536	123A
T-H2SC693	123A
T-H2SC715	123A
T-Q5019	163A
T-Q5053	123A
T-Q5053C	123A
T-Q5055	108
T-Q5057	124
T-Q5071	161
T-Q5073	123A
T-Q5075	124
T-Q5077	159
T-Q5078	233
T-Q5079	107
T-Q5080	175
T-Q5081	128
T-Q5082	154
T-Q5083	164
T-Q5084	165
T-Q5086	161
T-Q5087	159
T-Q5093	199
T-Q5099	128
T-Q5104	124
T-Q5105	130
T-Q5106	107
T-Q7037	1004
T-Q7038	1004
T-R9S	139A
TA05	6408
TA-1†	105
TA-2	121
TA-3	105
TA-4	102A
TA-5	126

To Be Replaced	ECG Replacement
TA-6	123A
TA6	123A
TA-7	108
TA7	123A
TA50	116
TA100	116
TA115	174
TA117	704
TA200	116
TA205P	1155
TA300	116
TA400	116
TA500	116
TA600	116
TA800	125
TA1000	125
TA1062	116
TA1063	116
TA1064	116
TA1222	5511
TA1225	5512
TA1575	102A
TA-1575	102A
TA1575B	102A
TA-1575B	100
TA1614	121
TA-1614	121
TA1620A	103
TA-1620A	103A
TA1620B	103
TA-1620B	103A
TA1628	160
TA-1628	160
TA1650A	160
TA-1650A	126
TA1655B	102A
TA-1655B	100
TA1658	160
TA-1658	160
TA1659	160
TA-1659	160
TA1660	160
TA-1660	160
TA1662	160
TA-1662	160
TA1682	121
TA-1682	121
TA1682A	121
TA-1682A	121
TA1697	102A
TA-1697	102A
TA1704	100
TA-1704	100
TA1705	121
TA-1705	121
TA1706	102A
TA-1706	102A
TA1730	102A
TA-1730	102A
TA1731	160
TA-1731	160
TA1755	160
TA-1755	126
TA1756	160
TA-1756	126
TA1757	160
TA-1757	160
TA1759	101
TA-1759	101
TA1763	100
TA-1763	100
TA1763A	100
TA-1763A	100
TA1765	121
TA-1765	121
TA1766	121
TA-1766	121
TA1767	101
TA-1767	101
TA1771	101
TA-1771	101
TA1772	101
TA-1772	101
TA1773	121
TA-1773	121
TA1778	100
TA-1778	100
TA1782	100
TA-1782	100
TA1783	100
TA-1783	100
TA1794	121
TA-1794	121
TA1796	160
TA-1796	160
TA1797	160
TA-1797	160
TA1798	160
TA-1798	160
TA1828	160
TA-1828	160
TA1829	160
TA-1829	160
TA1830	160
TA-1830	126
TA1846	160
TA-1846	160
TA1847	160
TA-1847	160
TA1860	160
TA-1860	160
TA1861	160
TA-1861	160
TA1881	121
TA-1881	121

To Be Replaced	ECG Replacement
TA1890	121
TA-1890	121
TA1891	121
TA-1891	121
TA1928A	127
TA2083	127
TA2188	127
TA2301	121
TA2322	160
TA2401	108
TA2402	175
TA2402A	175
TA2442	5504
TA2444	5504
TA2503	108
TA2509	124
TA2509A	124
TA2554	161
TA2555	161
TA2577A	130
TA2644	222
TA2653	230
TA2654	230
TA2655	230
TA2672	121
TA2700	124
TA2710	278
TA2773	5513
TA2800	278
TA2819	191
TA2840	220
TA2888	5455
TA2889	5455
TA2892A	5640
TA2893A	5651
TA2894A	5652
TA2911	152
TA5158C	903
TA5180C	903
TA5274	711
TA5274(RCA)	711
TA5278D	908
TA5348D	908
TA5349D	908
TA5401D	908
TA5402D	908
TA5403D	908
TA5561D	913
TA5562D	913
TA5628	788
TA5649	714
TA5649(RCA)	714
TA5702	715
TA5702(RCA)	715
TA5814	712
TA5814(RCA)	712
TA5912	790
TA5912(RCA)	790
TA6155	744
TA6200	128
TA6220	708
TA6243	731
TA6243(RCA)	731
TA6319(RCA)	797
TA6404	798
TA6405	738
TA6472	984
TA6480	1175
TA6523	749
TA7006P	1149
TA7027M	726
TA7028M	1188
TA7029AP-B	1023
TA7031M	901
TA7037M	726
TA7038M	704
TA7045	724
TA7045M	724
TA-7045M	724
TA-7045-M	724
TA7046P	1108
TA7047M	904
TA7050M	711
TA7050P	1061
TA-7051P	710
TA7051P	710
TA7053M	707
TA7054P	1106
TA7055P	1205
TA7055P-E	1205
TA7055P-F	1205
TA7057M	905
TA7060	1104
TA7060P	1104
TA7060P-10	1104
TA7060PR	1104
TA7060PRW	1104
TA7060PW	1104
TA7061	1100
TA7061A	1100
TA7061AP	1100
TA-7061AP	1100
TA7061AP	1100
TA7061(AP)	1100
TA7061B	1100
TA7061P	1100
TA-7062P	1102
TA7062P	1102
TA-7062P	1102
TA7063	1103
TA7063P	1103
TA-7063P	1103
TA7063P	1103
TA7063P-B	1103
TA7063P-C	1103

To Be Replaced	ECG Replacement
TA7063P-D	1103
TA7063P-E	1103
TA7063P-O	1103
TA7063PB	1103
TA7063PC	1103
TA7063PD	1103
TA7064P	1235
TA7064P-JA	1235
TA7068	130
TA7069	130
TA7069P	1101
TA-7069P	1101
TA7070	1004
TA7070GL	1004
TA7070P	1004
TA7070PFA-1	1004
TA7070PGL	1004
TA7071GL	712
TA7071P	712
TA7072P	748
TA7073AP	748
TA7073P	748
TA7074GL	749
TA7074P	749
TA7074PGL	749
TA7075	1080
TA7075P	1080
TA7076P	1109
TA7076P(FA-1)	1109
TA7076P(FA-6)	1109
TA7076P(FA-7)	1109
TA7086M	309K
TA7092AP	1023
TA7092AP-B	1023
TA7092AP-C	1023
TA7092P	1107
TA7092P-A	1107
TA7092P-B	1107
TA7092P-C	1107
TA7092P-D	1107
TA7092P-H	1107
TA7102P	1105
TA7102P(FA-1)	1105
TA7102P(FA-2)	1105
TA7106P	1149
TA7117P	1022
TA7120	1087
TA7120B	1087
TA7120P	1087
TA-7120P	1087
TA7120P-C	1087
TA7120P-D	1087
TA7120P-E	1087
TA7122AP	1085
TA7122AP-C	1085
TA7122AP-D	1085
TA7122APC	1085
TA7122AR	1085
TA7122P-B	1085
TA7124P	1128
TA7124P/FA-2	1128
TA7127P	1200
TA7130P	1234
TA7130P-B	1234
TA7130PB	1234
TA7130PC	1234
TA7134(TRANSISTOR)	228
TA7137(TRANSISTOR)	152
TA7145P	1134
TA7146P	1133
TA7148P	1131
TA7149	221
TA7149P	1132
TA7150	221
TA7150P	1130
TA7151	221
TA7153P	1129
TA-7155	196
TA7155	196
TA7156	152
TA7157P	1206
TA7159P	1243
TA7167	1200
TA7167P	1200
TA7176AP	712
TA7176P	1236
TA7176PFA-1	712
TA7176PG	1236
TA7189	222
TA7192P	1196
TA7199	223
TA7200	223
TA7201	223
TA7202	223
TA7202P	1259
TA7203	1154
TA-7203P	1154
TA7203P	1154
TA7204	1153
TA-7204P	1153
TA7204P	1153
TA-7204P	1153
TA7205	1155
TA7205A	1155
TA7205AP	1155
TA7205P	1155
TA7209P	1222
TA7214P	1273
TA7222P	1192
TA7262	152
TA7262(RCA)	221
TA7274	222
TA7292	154
TA7293	154
TA7303(Transistor)	108

To Be Replaced	ECG Replacement
TA7310	1192
TA7310A	1192
TA7310P	1192
TA7310P-O	1192
TA7311	182
TA7312	182
TA7313	182
TA7314	182
TA7315	182
TA7316	182
TA7318	182
TA7319	108
TA7362	196
TA7363	152
TA7374	222
TA7399	222
TA7404	5463
TA7405	5465
TA7461	5697
TA7462	5697
TA7500	5640
TA7501	5641
TA7502	5642
TA7502M	909
TA7503	5643
TA7504M	941
TA7504P	941M
TA7506M	1171
TA7506P	975
TA7520	185
TA7554	152
TA7555	152
TA7556	153
TA7557	153
TA7579	5643
TA7580	5643
TA7581	5643
TA7582	5643
TA7584	5697
TA7669	222
TA7684	222
TA7739	228
TA7740	228
TA7741	187
TA7742	197
TA7743	197
TA7782	196
TA7783	196
TA7784	196
TA7802	116
TA7803	116
TA7804	116
TA7805	125
TA7806	125
TA7996	116
TA8158	230
TA8159	230
TA8160	515
TA8161	515
TA8162	515
TA8205P	1155
TA8210	197
TA8211	197
TA8212	197
TA8231	196
TA8232	196
TA8233	196
TA8242	222
TA70639	1052
TA78005M	309K
TA78005P	960
TA78012P	966
TA78015P	968
TA198030-4	123A
TA198035-1	128
TA198036-2	159
TA198785-2	519
TA8532787	519
TAA320	133
TAA380	704
TAA521	909
TAA521/709	909
TAA521A	909D
TAA521A/709C	909D
TAA522	909
TAA522/709	909
TAA611A12	1113
TAA611B12	1113
TAA611C11	1118
TAA621A11	1111
TAA621A12	1112
TAC047	123A
TAC-047	123A
TAG3-50R	5511
TAG3-100R	5511
TAG3-200R	5511
TAG3-300R	5512
TAG3-400R	5512
TAG3-500R	5513
TAG3-600R	5513
TAG7-50R	5491
TAG7-100R	5491
TAG7-200R	5492
TAG7-300R	5494
TAG7-400R	5494
TAG7-500R	5496
TAG7-600R	5496
TAG10-50R	5491
TAG10-100R	5491
TAG10-200R	5492
TAG10-300R	5494
TAG10-400R	5494
TAG10-500R	5496
TAG10-600R	5496
TAG20-50R	5541

† — Type numbers prefixed with TA may have an IDENTICAL TYPE number for BOTH an RCA transistor and a TOSHIBA IC. Refer to schematic for correct device.

To Be Replaced	ECG Replacement
TAG20-100R	5542
TAG20-200R	5543
TAG20-300R	5544
TAG20-400R	5545
TAG20-500R	5546
TAG20-600R	5547
TA05	6408
TB5	5800
TB100	5802
TB200	5802
TB221B	941M
TBA221	941
TBA221/741C	941
TBA221A	941D
TBA221A/741C	941D
TBA222	941
TBA222/741	941
TBA231	725
TBA281	923
TBA281/723	923
TBA281/723C	923
TBA331	912
TBA641B11	1114
TBA800	1116
TBA810ACB	1115
TBA810ACBS	1115
TBA810AD	1115
TBA810ADS	1115
TBA810AP	1115
TBA810APS	1115
TBA810AS	1115
TBA810CB	1115A
TBA810D	1115A
TBA810DS	1115
TBA810P	1115A
TBA-810S	1115
TBA810S	1115
TBA810S-H*	1115A
TBA820	1117
TBA820L	1117
TBB0747	947
TBB0747A	947D
TBB0748	1171
TBB0748B	975
TBB1458B	778
TBC0748	1171
TC0.09M21/3	114
TC0.09M22/1	166
TC0.09m22/1	5804
TC0.1P	506
TC-0.2	506
TC-0.2P11/1	506
TC0.2P11/2	116
TC0.2P11/12	507
TC02P12	116
TC02P112	116
TC0914	108
TC0918	108
TC-0918	108
TC0P11/2	116
TC-6(Elcom)	703A
TC27A5A	146A
TC27A5A-5	146A
TC33A5A	147A
TC50	5800
TC62A5B	149A
TC82A5B	150A
TC100	5802
TC106A1	5454
TC106A2	5454
TC106A3	5454
TC106A4	5454
TC106B1	5455
TC106B2	5455
TC106B3	5455
TC106B4	5455
TC106C1	5456
TC106C2	5456
TC106C3	5456
TC106C4	5456
TC106D1	5457
TC106D2	5457
TC106D3	5457
TC106D4	5457
TC106F1	5453
TC106F2	5453
TC106F3	5453
TC106F4	5453
TC106Q1	5452
TC106Q2	5452
TC106Q3	5452
TC106Q4	5452
TC106Y1	5452
TC106Y2	5452
TC106Y3	5452
TC106Y4	5452
TC110A5B	151A
TC136	116
TC-136	116
TC200	5802
TC2369A	108
TC2483	108
TC2484	108
TC3001	1192
TC4001P	4001B
TC4002P	4002B
TC4007	4007B
TC4007P	4007B
TC4008	4008B
TC4011	4011B
TC4011BP	4011B
TC4011P	4011B
TC4012P	4012B
TC4013	4013B
TC4013P	4013B

To Be Replaced	ECG Replacement
TC4014P	4014B
TC4015P	4015B
TC4016P	4016B
TC4017P	4017B
TC4018	4018B
TC4019P	4019B
TC4020P	4020B
TC4021P	4021B
TC4023P	4023B
TC4024P	4024B
TC4025P	4025B
TC4027	4027B
TC4027P	4027B
TC4028P	4028B
TC4029P	4029B
TC4030P	4030B
TC4034	4034B
TC4035	4035B
TC4040P	4040B
TC4042P	4042B
TC4043	4043B
TC4044	4044B
TC4049P	4049B
TC4050P	4050B
TC4051P	4051B
TC4052P	4052B
TC4053	4053B
TC4063	4063B
TC4066	4066B
TC4068P	4068B
TC4069P	4069
TC4071P	4071B
TC4072	4072B
TC4073	4073B
TC4075	4075B
TC4078P	4078B
TC4081BP	4081B
TC4081P	4081B
TC4085P	4085B
TC4086P	4086B
TC4099P	4099B
TC4510	4510B
TC4512P	4512B
TC4514	4514B
TC4515	4515B
TC4516	4516B
TC4518P	4518B
TC4520P	4520B
TC4527P	4527B
TC4539P	4539B
TC4555P	4555B
TC4556P	4556B
TC4583	40100B
TC5080P	1207
TC5081	1208
TC5081P	1208
TC5082D	1197
TC5082L	1197
TC5082P	1197
TC5082P-L	1197
TC5082PL	1197
TC9100C	1167
TC9100P	1167
TC311200600	109
TC3112006000	109
TC3112319300	116
TC3123036722	123A
TC3123036900	123A
TC3123037111	123A
TC3123037222	123A
TC3123037412	123A
TC3123041557	102A
TCH98	159
TCR3	5481
TCR8	5481
TCR13	5483
TCR18	5483
TCR23	5483
TCR28	5483
TCR38	5484
TCR48	5485
TCR50	5481
TCR51	5482
TCR52	5483
TCR53	5483
TCR54	5484
TCR55	5484
TCR56	5485
TCR70	5481
TCR71	5482
TCR72	5483
TCR74	5484
TCR75	5484
TCR505	5481
TCR510	5481
TCR730	5481
TCR731	5482
TCR732	5483
TCR733	5484
TCR734	5485
TCR742	5481
TCR743	5482
TCR744	5483
TCR745	5483
TCR746	5484
TCR747	5484
TCR748	5485
TCR1005	5483
TCR1010	5482
TCR1505	5483
TCR1510	5483
TCR2005	5483
TCR2010	5483
TCR2505	5484
TCR2510	5484

To Be Replaced	ECG Replacement
TCR3005	5484
TCR3010	5484
TCR3505	5485
TCR3510	5485
TCR4005	5485
TCR4010	5485
TD2.8F400H	308
TD2.8F400R	310
TD2.8F500H	308
TD2.8F500R	310
TD2.8F600H	308
TD2.8F600R	310
TD2.8F700H	308
TD2.8F700R	310
TD3F800H	310
TD3F800R	308
TD-13	551
TD13	551
TD-15	551
TD15	551
TD-15-BL	177
TD15(DIODE)	551
TD-15(DIODE)	551
TD-15H	551
TD20W	601
TD102	123A
TD201	123A
TD202	123A
TD400	159
TD401	159
TD402	159
TD500	159
TD501	159
TD502	159
TD550	159
TD1060	9930
TD1060P	9930
TD1061	9935
TD1061P	9935
TD1062	9932
TD1062P	9932
TD1063	9933
TD1063P	9933
TD1064	9944
TD1064P	9944
TD1065	9946
TD1065P	9946
TD1066	9962
TD1066P	9962
TD1067	9948
TD1067P	9948
TD1070	9945
TD1070P	9945
TD1072	9936
TD1072P	9936
TD1073	9093
TD1073P	9093
TD1074	9099
TD1074P	9099
TD1080	9961
TD1080P	9961
TD1085	9949
TD1085P	9949
TD1086	9963
TD1086P	9963
TD1401	7400
TD1401P	7400
TD1402	7410
TD1402P	7410
TD1403	7420
TD1403P	7420
TD1404	7430
TD1404P	7430
TD1405	7440
TD1405P	7440
TD1406	7450
TD1406P	7450
TD1407	7460
TD1407P	7460
TD1408	7472
TD1408P	7472
TD1409	7473
TD1409P	7473
TD1419	7451
TD1419P	7451
TD2001P	9661
TD2002P	9670
TD2003P	9668
TD2004P	9664
TD2005P	9663
TD2006P	9669
TD2008P	9660
TD2009P	9671
TD2010P	9672
TD2011P	9662
TD2012P	9678
TD2013P	9677
TD2015P	9667
TD2219	123A
TD2905	159
TD3400A	7400
TD3400AP	7400
TD3400P	7400
TD3401A	7401
TD3401AP	7401
TD3402A	7402
TD3402AP	7402
TD3403AP	7403
TD3404A	7404
TD3404AP	7404
TD3405A	7405
TD3405AP	7405
TD3406AP	7406

To Be Replaced	ECG Replacement
TD3407AP	7407
TD3408AP	7408
TD3409A	7409
TD3409AP	7409
TD3410A	7410
TD3410AP	7410
TD3410P	7410
TD3416AP	7416
TD3417AP	7417
TD3420A	7420
TD3420AP	7420
TD3420P	7420
TD3421AP	7421
TD3426AP	7426
TD3430A	7430
TD3430AP	7430
TD3430P	7430
TD3437AP	7437
TD3438AP	7438
TD3440A	7440
TD3440AP	7440
TD3440P	7440
TD3441A	7441
TD3441AP	7441
TD3442A	7442
TD3442AP	7442
TD3447A	7447
TD3447AP	7447
TD3450A	7450
TD3450AP	7450
TD3450P	7450
TD3451A	7451
TD3451AP	7451
TD3451P	7451
TD3460A	7460
TD3460AP	7460
TD3460P	7460
TD3472A	7472
TD3472AP	7472
TD3473A	7473
TD3473AP	7473
TD3474A	7474
TD3474AP	7474
TD3474P	7474
TD3475A	7475
TD3475AP	7475
TD3476AP	7476
TD3480A	7480
TD3480AP	7480
TD3482P	7482
TD3483P	7483
TD3486AP	7486
TD3490A	7490
TD3490AP	7490
TD3490BP	7490
TD3490P	7490
TD3491A	7491
TD3491AP	7491
TD3492A	7492
TD3492AP	7492
TD3492BP	7492
TD3492P	7492
TD3493A	7493A
TD3493AP	7493A
TD3493BP	7493A
TD3493P	7493A
TD3495A	7495
TD3495AP	7495
TD3503A	74164
TD3503AP	74164
TD3505	1209
TD34107AP	74107
TD34121A	74121
TD34121AP	74121
TD34192A	74192
TD34192AP	74192
TD34192BP	74192
TD34193BP	74193
TD81515	177
TD960016-1M	177
TDA0741D	941M
TDA1190Z	1231
TDA1200	788
TDA1330	747
TDA1330P	747
TDA1352	749
TDA1352P	749
TDA1405	960
TDA1412	966
TDA1415	968
TDA2002	1232
TDA3081B	916
TDA3081N	916
TDB0555B	955M
TDB0556A	978
TDB0723	923
TDB0723A	923D
TDB2905SP	961
TDB2912SP	967
TDB2915SP	969
TDB7805	309K
TDB7805T	960
TDB7806T	962
TDB7808T	964
TDB7812T	966
TDB7815T	968
TDB7824T	972
TDC2710P	910D
TDC2710V	910
TDC2711P	911D
TDC2711V	911
TE500	312
TE-500-E	132
TE697	123A
TE706	108

To Be Replaced	ECG Replacement
TE1010	116
TE1011	116
TE1014	109
TE1024	116
TE1024C	116
TE1024D	116
TE1029	116
TE1031	109
TE1042	116
TE1050	116
TE1061	113
TE1061A	113
TE1064	125
TE1068	142A
TE1077	142A
TE1078	116
TE1080	116
TE1086	113
TE1088	116
TE1089	116
TE1090	116
TE1095	118
TE1097	116
TE1098	109
TE1105	109
TE1108	116
TE1114	118
TE1420	123A
TE1990	128
TE2369	123A
TE2484	108
TE2711	199
TE2712	199
TE2713	172A
TE2714	172A
TE2715	108
TE2716	108
TE2921	199
TE2922	199
TE2923	199
TE2924	199
TE2925	199
TE2926	199
TE3390	199
TE3391	199
TE3391A	199
TE3392	199
TE3393	199
TE3394	199
TE3395	199
TE3396	199
TE3397	199
TE3398	199
TE3414	123A
TE3415	123A
TE3416	128
TE3417	192
TE3605	123A
TE3605A	123A
TE3607	123A
TE3702	193
TE3703	193
TE3704	123A
TE3705	123A
TE3707	108
TE3708	108
TE3709	108
TE3710	108
TE3711	108
TE3843	199
TE3844	199
TE3845	199
TE3854	199
TE3854A	199
TE3855	199
TE3855A	199
TE3859	199
TE3859A	192
TE3860	199
TE3900	199
TE3900A	199
TE3901	199
TE3903	123A
TE3904	123A
TE3905	159
TE3906	123A
TE4123	123A
TE4124	123A
TE4125	159
TE4126	159
TE4256	199
TE4424	123A
TE4425	192
TE4951	123A
TE4952	123A
TE4953	123A
TE4954	123A
TE5086	193
TE5087	193
TE5088	199
TE5089	199
TE5249	199
TE5309	199
TE5309A	123A
TE5310	199
TE5311	199
TE5311A	123A
TE5365	159
TE5366	159
TE5367	193
TE5368	123A
TE5369	123A
TE5370	123A
TE5371	123A
TE5376	123A

To Be Replaced	ECG Replacement
TE5377	123A
TE5378	159
TE5379	159
TE5447	159
TE5448	159
TE5449	123A
TE5450	123A
TE5451	123A
TF7	124
TF20	116
TF21	116
TF22	116
TF23	116
TF30	102A
TF-30	102A
TF34	177
TF44	177
TF44J	177
TF49	102A
TF65	102A
TF-65	102A
TF65/30	102A
TF65/M	102A
TF65M	158
TF65/S/30	102A
TF66	102A
TF-66	102A
TF66/30	102A
TF66/60	102A
TF70	101
TF71	101
TF72	101
TF75	102A
TF77	102A
TF78	104
TF-78	123A
TF78/30	104
TF78/30Z	121
TF78/60	121
TF80/30	121
TF-80/30	121
TF80/30Z	121
TF80/302	102A
TF101-A	128
TF101-B	128
TF101-D	128
TFR105	125
TFR110	125
TFR120	116
TFR-120	116
TFR140	125
TG2SA201	126
TG2SA201-0	126
TG2SA201-0-A	126
TG2SA201C	126
TG2SA201-N	126
TG2SA608	159
TG2SA608C	159
TG2SA608-D	159
TG2SA608-E	159
TG2SC65	154
TG2SC65Y	154
TG2SC536	199
TG2SC536C	199
TG2SC536-D-A	199
TG2SC536-D-B	199
TG2SC536E	199
TG2SC536-E	199
TG2SC536-E-A	199
TG2SC536-E-B	199
TG2SC536-F	199
TG2SC536F	199
TG2SC536-F-A	199
TG2SC927	161
TG2SC927A	107
TG2SC927C	107
TG2SC927-C-A	319
TG2SC927-D-A	319
TG2SC927-DD-A	161
TG2SC927-E-A	319
TG2SC1025	175
TG2SC1025D	175
TG2SC1046N-A	165
TG2SC1175	123A
TG2SC1175C	123A
TG2SC1175-C	123A
TG2SC1175-C-A	123A
TG2SC1175-D	123A
TG2SC1175-D-A	123A
TG2SC1175-E	123A
TG2SC1175-E-A	123A
TG2SC1293	233
TG2SC1293A	233
TG2SC1293-A	233
TG2SC1293-A-A	233
TG2SC1293-B	233
TG2SC1293B	233
TG2SC1293-B-A	233
TG2SC1293-C	233
TG2SC1293C	233
TG2SC1293-C-A	233
TG2SC1293-D	233
TG2SC1293D	233
TG2SC1293-D-A	233
TG2SC1295	165
TG2SC1295-0	165
TG2SC1295-0-A	165
TG2SC1755-C-A	198
TG2SC1756	198
TG2SC1756-C	198
TG2SC1756-C-A	198
TG2SC1756-C-B	198
TG2SC1756-D	198
TG2SC1756-D-A	198
TG2SC1756-D-B	198

To Be Replaced	ECG Replacement
TG2SC1756-D-C	198
TG2SC1756-D-R	198
TG2SC1756-E	198
TG2SC1756-E-A	198
TG2SC1756-E-B	198
TG2SC2057-C	319
TG2SC2057C	319
TG2SC2057-D	319
TG2SC2228	287
TG2SC12950	165
TG2SD24	124
TG2SD24Y	124
TG2SD386Y-D	375
TG2SD386Y-D-A	198
TG2SD386Y-E	375
TG2SD386Y-E-A	198
TG2SD575L	165
TG11	116
TG-11	116
TG11	176
TG12	116
TG-12	116
TG20A	116
TG21	116
TG-21	116
TG22	116
TG-22	116
TG-28	109
TG31	116
TG-31	116
TG32	116
TG-32	116
TG41	116
TG-41	116
TG42	116
TG-42	116
TG-48	109
TG48	158
TG51	116
TG-51	116
TG52	116
TG-52	116
TG61	116
TG-61	116
TG62	116
TG-62	116
TH1S557	116
TH-1S750	112
TH2SA733-Q	294
TH2SC536	123A
TH2SC693	123A
TH2SC715	123A
TH50	116
TH400	116
TH600	116
TH800	125
TH801	116
TH802	116
TH803	116
TH804	116
TH805	116
TH806	116
TH808	125
TH810	125
TH1000	125
TH7251	196
TH-H2SC313	161
THC12B	5127A
THSG105	116
THU60U	102A
TI-1A6	131
TI1A6	123A
TI-7A	131
TI24A	123A
TI24B	123A
TI25A	108
TI25B	108
TI40A0	5481
TI-40A1	5483
TI40A1	5482
TI-40A2	5483
TI40A2	5483
TI40A3	5484
TI40A4	5485
TI42	6407
TI42A	6408
TI43A	6408
TI-51	177
TI51	177
TI52	116
TI53	116
TI-53	116
TI54	116
TI54A	123A
TI54B	123A
TI54C	123A
TI54D	199
TI54E	123A
TI-55	116
TI55	116
TI56	116
TI-56	5800
TI57	116
TI58	116
TI59	116
TI60	116
TI-71	116
TI71	116
TI-92	199
TI-132	5483
TI-136	5483
TI136	5483
TI137	5484
TI138	5485
TI152	116

@, * — See special notes on inside back cover.

To Be Replaced	ECG Replacement
TI-266A	121
TI266A	121
TI-269	121
TI269	121
TI338	160
TI-338	160
TI363	160
TI-363	100
TI364	160
TI-364	100
TI365	160
TI-365A	166
TI366	121
TI-366	121
TI366A	121
TI-366A	121
TI367	121
TI-367	121
TI367A	121
TI-367A	121
TI368	121
TI-368	121
TI368A	121
TI-368A	121
TI369	121
TI-369	121
TI369A	121
TI-369A	121
TI370	104
TI-370	121
TI370A	104
TI-370A	121
TI387	160
TI-387	160
TI388	160
TI-388	160
TI389	160
TI390	160
TI391	160
TI393	160
TI395	160
TI396	160
TI397	160
TI398	160
TI399	160
TI400	160
TI-400	160
TI401	160
TI-401	160
TI402	160
TI403	160
TI-403	160
TI407	108
TI-407	161
TI408	108
TI-408	161
TI409	108
TI-409	161
TI410	108
TI-410	108
TI411	123A
TI-412	123A
TI-413	123A
TI-414	123A
TI415	123A
TI-415	199
TI416	123A
TI-416	199
TI417	123A
TI-417	108
TI418	123A
TI-418	199
TI419	123A
TI-419	199
TI420	123A
TI-420	108
TI-421	199
TI422	123A
TI-422	123A
TI-423	123A
TI424	123A
TI-424	128
TI-425	128
TI-428	159
TI-429	159
TI430	123A
TI-430	108
TI431	108
TI-431	108
TI432	123A
TI-432	123A
TI-433	123A
TI-474	108
TI-475	128
TI480	123A
TI-480	128
TI481	123A
TI482	123A
TI-482	128
TI483	123A
TI-483	128
TI484	123A
TI-484	128
TI485	123A
TI-485	192
TI486	152
TI487	152
TI-490	108
TI492	123A
TI-492	161
TI493	123A
TI-493	161
TI494	123A
TI-494	161
TI495	123A

To Be Replaced	ECG Replacement
TI-495	108
TI496	123A
TI-496	128
TI-503	159
TI503	159
TI-714	123A
TI714	123A
TI-714A	123A
TI-722	154
TI722	171
TI-741	132
TI741	132
TI-743	159
TI743	159
TI-744	159
TI744	159
TI-751	123A
TI751	123A
TI-752	159
TI752	159
TI802B	123A
TI803B	123A
TI-806G	123A
TI808E	129
TI810B	123A
TI811G	128
TI-890	159
TI-891	193
TI904	123A
TI-905	159
TI-906	159
TI-907	123A
TI907	123A
TI-908	123A
TI908	123A
TI3010	160
TI3011	160
TI3012	121
TI3015	128
TI3016	108
TI-3016	107
TI3027	121
TI3028	121
TI3029	121
TI-3030	179
TI-3031	179
TI64213	128
TI-UG1888	177
TI-UG-1888	177
TIA01	102A
TIA-01	102A
TIA02	160
TIA03	100
TIA04	102
TIA05	100
TIA05A	100
TIA06	123A
TIA042	5483
TIA35	176
TIA102	123A
TIA722	222
TIC22	5663
TIC23	5665
TIC44	5400
TIC45	5401
TIC46	5402
TIC47	5404
TIC54	6407
TIC55	6406
TIC56	6407
TIC57	6406
TIC60	5400
TIC61	5401
TIC62	5402
TIC63	5403
TIC64	5404
TIC106A	5454
TIC106B	5455
TIC106C	5456
TIC106F	5453
TIC106Y	5452
TIC116A	5462
TIC116B	5463
TIC116C	5465
TIC116D	5465
TIC116F	5461
TIC205A	5650
TIC205B	5651
TIC205D	5652
TIC222B	5673
TIC222D	5675
TIC222E	5676
TIC226B	56004
TIC226D	56006
TIC232B	5673
TIC232D	5675
TIC232E	5676
TIC236B	56004
TIC236D	56006
TIC242B	5673
TIC242D	5675
TIC242E	5676
TIC252B	5683
TIC252D	5685
TIC252E	5686
TIC252M	5687
TIC262B	5683
TIC262D	5685
TIC262E	5686
TIC262M	5687
TIC272B	5693
TIC272D	5695
TIC272E	5697
TIC272M	5697
TIC2420	5677

To Be Replaced	ECG Replacement
TIE	718
TIJ	718
TIL31	3028
TIL34	3028
TIL113	3041
TIL116	3043
TIL-209A	3007
TIL216B	3007
TIL220	3018
TIL224-1	3021
TIL234-1	3024
TIL241-1	3018
TIL302	3050
TIL304	3051
TIL312(LHD)	3061
TIL312(RHD)	3052
TIL314(LHD)	3063
TIL314(RHD)	3054
TIL316(LHD)	3062
TIL316(RHD)	3053
TIM-01	160
TIM-10	160
TIM-11	160
TIN	718
TIP3A	197
TIP4	196
TIP-14	152
TIP14	184
TIP24	152
TIP-24	196
TIP27	157
TIP29	291
TIP29A	291
TIP29B	291
TIP29C	291
TIP29XA	196
TIP30	292
TIP30A	292
TIP30B	292
TIP30C	292
TIP-31	196
TIP31	196
TIP-31A	196
TIP31A	196
TIP32	197
TIP32A	197
TIP32B	197
TIP33C	390
TIP34	183
TIP34A	183
TIP34B	183
TIP34C	391
TIP35C	392
TIP36C	393
TIP41	196
TIP41A	196
TIP41B	196
TIP42	197
TIP42A	197
TIP42B	197
TIP47	198
TIP48	198
TIP49	198
TIP54	394
TIP120	261
TIP121	261
TIP125	262
TIP126	262
TIP140	270
TIP141	270
TIP142	270
TIP145	271
TIP146	271
TIP147	271
TIP503	175
TIP535	162
TIP554	283
TIP555	283
TIP558	283
TIP559	283
TIP560	283
TIP640	245
TIP641	245
TIP645	246
TIP646	246
TIP2955	393
TIR01	116
TIR02	116
TIR03	116
TIR04	116
TIR05	116
TIR06	116
TIR07	125
TIR08	125
TIR09	125
TIR10	125
TIS03	159
TIS-03	159
TIS04	159
TIS14	133
TIS18	161
TIS22	123A
TIS23	123A
TIS24	108
TIS34	132
TIS37	159
TIS38	159
TIS42	132
TIS44	123A
TIS45	123A
TIS46	123A
TIS47	123A
TIS48	123A
TIS49	123A
TIS50	159

To Be Replaced	ECG Replacement
TIS51	123A
TIS52	123A
TIS53	159
TIS54	159
TIS55	123A
TIS56	123A
TIS57	123A
TIS58	132
TIS59	132
TIS60	123A
TIS60A	128
TIS60B	128
TIS60C	128
TIS60D	128
TIS60E	128
TIS60M	128
TIS61	159
TIS61A	129
TIS61B	129
TIS61C	129
TIS61D	129
TIS61E	129
TIS61M	129
TIS62	108
TIS63	108
TIS64	108
TIS71	123A
TIS72	123A
TIS78	133
TIS79	133
TIS82	186
TIS83	123A
TIS84	108
TIS85	108
TIS86	107
TIS87	107
TIS88	132
TIS-88	132
TIS90	123A
TIS90-2	123A
TIS91	159
TIS92	123A
TIS92-BLU	123A
TIS92-GRN	123A
TIS92-GRY	123A
TIS92M	128
TIS92-VIO	123A
TIS92-YEL	123A
TIS93	159
TIS93-BLU	159
TIS93-GRN	159
TIS93-GRY	159
TIS93M	129
TIS93-VIO	159
TIS93-YEL	159
TIS94	123A
TIS-94	199
TIS95	123A
TIS96	123A
TIS97	107
TIS-97	199
TIS98	107
TIS98A	108
TIS99	107
TIS100	154
TIS101	154
TIS102	154
TIS103	154
TIS104	159
TIS105	108
TIS106	194
TIS107	128
TIS108	107
TIS109	195A
TIS110	195A
TIS111	195A
TIS112	159
TIS113	123A
TIS114	123A
TIS412	107
TIU3304	912
TIV26	611
TIV27	611
TIV28	611
TIV306	610
TIX90	102A
TIX91	160
TIX92	160
TIX316	160
TIX440	5940
TIX441	5944
TIX442	5944
TIX712	123A
TIX804	159
TIX805	159
TIX876	108
TIX880	108
TIX888	195A
TIX890	159
TIX891	159
TIX895	100
TIX896	101
TIX1392	195A
TIX1393	195A
TIX3016	160
TIX3016A	160
TIX3032	160
TIX-M01	160
TIX-M02	160
TIX-M03	160
TIX-M04	160
TIX-M05	160
TIX-M06	160
TIX-M07	160
TIX-M08	160

To Be Replaced	ECG Replacement
TIX-M11	160
TIX-M14	161
TIX-M15	161
TIX-M16	161
TIX-M17	160
TIX-M101	160
TIX-M201	160
TIX-M202	160
TIX-M203	160
TIX-M204	160
TIX-M205	160
TIX-M206	160
TIX-M207	160
TIXA01	100
TIXA02	100
TIXA03	100
TIXA-03	100
TIXA04	100
TIXA-04	100
TIXA05	100
TIXA-05	100
TIXD747	134A
TIXD753	137A
TIXD758	140A
TIXM01	160
TIXM02	160
TIXM03	160
TIXM04	160
TIXM05	160
TIXM06	160
TIXM07	160
TIXM08	160
TIXM10	160
TIXM11	160
TIXM13	160
TIXM14	160
TIXM15	160
TIXM16	160
TIXM17	160
TIXM18	160
TIXM19	160
TIXM101	160
TIXM103	160
TIXM104	160
TIXM105	160
TIXM106	160
TIXM107	160
TIXM108	160
TIXM201	160
TIXM-201	160
TIXM202	160
TIXM203	160
TIXM-203	160
TIXM204	160
TIXM205	160
TIXM-205	160
TIXM206	160
TIXM-206	160
TIXM207	160
TIXS09	108
TIXS10	108
TIXS12	123A
TIXS13	123A
TIXS28	108
TIXS29	108
TIXS30	108
TIXS31	108
TJ5A	116
TJ-5A	116
TJ10A	116
TJ15A	116
TJ20A	116
TJ25A	116
TJ30A	116
TJ35A	116
TJ40A	116
TJ60A	116
TK5	116
TK10	116
TK-10	116
TK11	116
TK20	116
TK21	116
TK23C	102A
TK-23C	102A
TK30	116
TK-30	116
TK33C	101
TK-40	116
TK40	102
TK40A	102A
TK40C	102
TK-40C	102A
TK40CA	102A
TK-41	116
TK41	102
TK41A	102A
TK41C	160
TK-41C	102A
TK42	102
TK42A	102A
TK42C	160
TK-42C	102A
TK45C	102
TK-45C	102A
TK49C	102A
TK50	116
TK60	116
TK61	116
TK400	116
TK600	116
TK705M	113
TK-705M	113
TK800	125
TK1000	125

To Be Replaced	ECG Replacement
TK1228-001	160
TK1228-1001	126
TK1228-1002	102A
TK1228-1003	102A
TK1228-1004	102A
TK1228-1005	102A
TK1228-1006	102A
TK1228-1007	102A
TK1228-1008	123
TK1228-1009	123
TK1228-1010	123A
TK1228-1011	123A
TK1228-1012	123A
TK9201	181
TKF5	116
TKF10	116
TKF20	116
TKF40	116
TKF60	116
TKF80	125
TKF100	125
TL1	116
TL2	116
TL11	116
TL12	116
TL21	116
TL22	116
TL31	116
TL32	116
TL41	116
TL42	116
TL51	116
TL61	116
TL74H87N	74H87
TL74H183N	74H183
TL1709C	909
TL1741C	941
TL2741C	941M
TL3709C	909D
TL3741C	941D
TL4741C	941M
TL7400N	7400
TL7401N	7401
TL7402N	7402
TL7403N	7403
TL7404N	7404
TL7405N	7405
TL7406N	7406
TL7407N	7407
TL7408N	7408
TL7409N	7409
TL7410N	7410
TL7412N	7412
TL7413N	7413
TL7416N	7416
TL7420N	7420
TL7422	7422
TL7423N	7423
TL7425N	7425
TL7426N	7426
TL7428	7428
TL7430N	7430
TL7433	7433
TL7437N	7437
TL7438N	7438
TL7440N	7440
TL7442N	7442
TL7443N	7443
TL7444N	7444
TL7445N	7445
TL7446AN	7446
TL7447AN	7447
TL7448N	7448
TL7450N	7450
TL7451N	7451
TL7453N	7453
TL7454N	7454
TL7460N	7460
TL7470N	7470
TL7472N	7472
TL7473N	7473
TL7474N	7474
TL7475N	7475
TL7476N	7476
TL7480N	7480
TL7481	7481
TL7481N	7481
TL7482N	7482
TL7483N	7483
TL7484N	7484
TL7485N	7485
TL7486N	7486
TL7489N	7489
TL7490N	7490
TL7491N	7491
TL7492N	7492
TL7493N	7493A
TL7494N	7494
TL7495AN	7495
TL7496N	7496
TL7497N	7497
TL74107N	74107
TL74110	74110
TL74111	74111
TL74121N	74121
TL74122N	74122
TL74123N	74123
TL74125	74125
TL74126	74126
TL74128	74128
TL74132	74132
TL74141N	74141
TL74145N	74145
TL74150N	74150
TL74151N	74151

To Be Replaced	ECG Replacement
TL74153N	74153
TL74154N	74154
TL74155N	74155
TL74156N	74156
TL74162N	74162
TL74163N	74163
TL74164N	74164
TL74165N	74165
TL74166N	74166
TL74180N	74180
TL74181N	74181
TL74182N	74182
TL74190N	74190
TL74191N	74191
TL74192N	74192
TL74193N	74193
TL74196N	74196
TL74197N	74197
TL74198N	74198
TL74199N	74199
TLG103	3014
TLG105	3015
TLR104	3012
TLR105	3013
TLRG101	3016
TM1	5870
TM2	5940
TM3	5874
TM4	5874
TM5	5940
TM6	5874
TM7	5940
TM8	5940
TM9	5940
TM11	5872
TM12	5872
TM13	5944
TM14	5874
TM15	5874
TM16	5874
TM17	5944
TM18	5944
TM19	5944
TM21	5874
TM22	5874
TM-22	106
TM23	5944
TM24	5944
TM25	5944
TM26	5944
TM27	5944
TM28	5944
TM29	5944
TM31	5944
TM32	5874
TM33	116
TM-33	116
TM34	5874
TM35	5874
TM36	5874
TM37	5874
TM38	5874
TM39	5874
TM41	5878
TM42	5878
TM43	116
TM-43	116
TM44	5874
TM45	5874
TM46	5874
TM47	5874
TM48	5874
TM49	5874
TM51	5882
TM52	5882
TM55	5882
TM56	5882
TM61	156
TM62	116
TM63	116
TM65	116
TM66	116
TM84	156
TM85	156
TM86	125
TM100	100
TM101	101
TM102	102
TM102A	102A
TM103	103
TM103A	103A
TM104MP	104MP
TM104(RECT)	156
TM104(TRANSISTOR)	104
TM105(RECT)	156
TM105(TRANSISTOR)	105
TM106	106
TM107	107
TM108	108
TM121	121
TM121MP	121MP
TM123	123
TM123A	123A
TM124	124
TM126	126
TM127	127
TM128	128
TM129	129
TM130	130
TM130MP	130MP
TM131	131
TM131MP	131MP
TM152	152
TM153	153
TM154	154

To Be Replaced	ECG Replacement
TM155	155
TM157	157
TM158	158
TM159	159
TM160	160
TM161	161
TM162	162
TM163A	163A
TM164	164
TM165	165
TM171	171
TM175	175
TM176	176
TM179	179
TM180	180
TM181	181
TM182	182
TM183	183
TM184	184
TM185	185
TM186	186
TM186A	186A
TM187	187
TM187A	187A
TM188	188
TM189	189
TM190	190
TM191	191
TM192	192
TM193	193
TM194	194
TM195A	195A
TM196	196
TM197	197
TM198	198
TM199	199
TM210	210
TM211	211
TM213	213
TM218	218
TM219	219
TM223	223
TM224	224
TM225	225
TM226	226
TM226MP	226MP
TM228	228
TM229	229
TM233	233
TM234	234
TM235	235
TM236	236
TM237	237
TM238	238
TM241	241
TM242	242
TM277	277
TM278	278
TM280	280
TM280MP	280MP
TM281	281
TM282	282
TM283	283
TM284	284
TM284MP	284MP
TM285	285
TM286	286
TM287	287
TM288	288
TM289	289
TM289MP	289MP
TM290	290
TM291	291
TM292	292
TM293	293
TM293MP	293MP
TM294	294
TM295	295
TM297	297
TM297MP	297MP
TM298	298
TM299	299
TM300	300
TM300MP	300MP
TM302	302
TM306	306
TM307	307
TM311	311
TM313	313
TM315	315
TM316	316
TM317	317
TM318	318
TM319	319
TM320	320
TM321	321
TM322	322
TM323	323
TM324	324
TM325	325
TM327	327
TM328	328
TM329	329
TM507	5481
TM712	712
TM714	714
TM723	723
TM736	736
TM738	738
TM788	788
TM791	791
TM801	801
TM1003	1003
TM1004	1080
TM1005	1005

To Be Replaced	ECG Replacement
TM1006	1006
TM1007	5482
TM1056	1056
TM1058	1058
TM1080	1080
TM1082	1082
TM1131	1131
TM1132	1132
TM1133	1133
TM1155	1155
TM1160	1160
TM1167	1167
TM1178	1178
TM1183	1183
TM1217	1217
TM1614	159
TM1712	159
TM2007	5483
TM2613	123A
TM2614	159
TM2711	123A
TM2712	159
TM3007	5484
TM4007	5485
TM5007	5486
TM5400	5400
TM6007	5487
TM7400	7400
TM7405	7405
TM7474	7474
TM7493A	7493A
TM8005	222
TMD01	135A
TMD01A	135A
TMD02	136A
TMD02A	136A
TMD03	137A
TMD03A	137A
TMD04	5014A
TMD04A	5014A
TMD06	5016A
TMD06A	5016A
TMD07	139A
TMD07A	139A
TMD08	140A
TMD08A	140A
TMD10	142A
TMD10A	142A
TMD41	116
TMD42	116
TMD45	116
TMT696	108
TMT697	108
TMT839	108
TMT840	108
TMT841	108
TMT842	108
TMT843	108
TMT1543	123A
TMT-1543	123A
TMT2427	108
TMT-2427	108
TN061690	159
TN061703	159
TN2SA733-Q	294
TN2SA733Q	294
TN2SA733-Q-A	294
TN2SA733-Q-B	294
TN2SA733-R	294
TN2SA733R	294
TN2SA733-R-A	294
TN2SC945-Q	199
TN2SC945Q	199
TN2SC945-R	199
TN2SC945R	199
TN2SC1507	198
TN2SC1507K	198
TN2SC1507-K-A	198
TN2SC1507-L	198
TN2SC1507L	198
TN2SC1507-L-A	198
TN2SC1507-L-B	198
TN2SC1507-M	198
TN2SC1507M	198
TN2SC1507-M-A	198
TN2SC1520-1	198
TN2SC1520-K-1	198
TN2SC1520-K-1A	198
TN2SC1520-L-1	198
TN2SC1520-L-1A	198
TN2SC1520-L-3A	198
TN2SC1520-M-1	198
TN2SC1520-M-1A	198
TN2SC1520-M-3A	198
TN2SC1941	287
TN53	123A
TN55	123A
TN55C15	145A
TN56	123A
TN59	123A
TN60	123A
TN61	123A
TN62	123A
TN63	123A
TN64	123A
TN79	192
TN80	123A
TN81	192
TN237	123A
TN591	102A
TNC61688	172A
TNC61689	123A
TNC61690	159
TNC61702	123A
TNC61703	159

To Be Replaced	ECG Replacement
TNJ6I672	116
TNJ1034	199
TNJ1173	161
TNJ6172(2SC722)	107
TNJ60063	160
TNJ60064	160
TNJ60065	160
TNJ60066	108
TNJ-60066	108
TNJ60067	160
TNJ-60067	160
TNJ60068	160
TNJ-60068	160
TNJ60069	160
TNJ-60069	160
TNJ60069(2SC74)	107
TNJ60070	102A
TNJ-60070	102A
TNJ60071	160
TNJ-60071	160
TNJ60072	154
TNJ60073	160
TNJ-60073	160
TNJ60074	102A
TNJ-60074	102A
TNJ60075	127
TNJ-60075	127
TNJ60076	123A
TNJ-60076	123A
TNJ60077	160
TNJ-60077	160
TNJ60078	162
TNJ60079	102A
TNJ-60079	102A
TNJ60080	127
TNJ-60080	127
TNJ60279	160
TNJ-60279	160
TNJ60280	160
TNJ-60280	160
TNJ60281	160
TNJ-60281	160
TNJ60282	102A
TNJ-60282	102A
TNJ60283	102A
TNJ-60283	102A
TNJ60362	126
TNJ-60362	160
TNJ60363	126
TNJ-60363	160
TNJ60364	126
TNJ-60364	160
TNJ60365	102A
TNJ-60365	160
TNJ60447	107
TNJ60448	107
TNJ60449	107
TNJ60450	160
TNJ60451	175
TNJ60453	175
TNJ60454	121
TNJ60455	162
TNJ60456	160
TNJ60457	174
TNJ60604	107
TNJ60605	107
TNJ-60605	107
TNJ60606	107
TNJ-60606	123A
TNJ60607	107
TNJ-60607	123A
TNJ60608	100
TNJ-60608	160
TNJ60610	102A
TNJ-60610	100
TNJ60611	102A
TNJ-60611	100
TNJ60612	158
TNJ-60612	100
TNJ60728	102A
TNJ-60728	102A
TNJ61217	107
TNJ61218	107
TNJ61219	123A
TNJ61220	123A
TNJ61222	102A
TNJ61223	176
TNJ61282	102A
TNJ61671	101
TNJ61671(2SC688)	107
TNJ61671(2SD72)	103A
TNJ61672(2SK25)	132
TNJ61673	133
TNJ61673(2SB186)	102A
TNJ61673(2SK24)	133
TNJ61674	158
TNJ61679	107
TNJ61729	108
TNJ61730	107
TNJ61731	107
TNJ61734	103A
TNJ70450	186
TNJ70478	108
TNJ70478-1	108
TNJ70479	108
TNJ70479-1	123A
TNJ70480	108
TNJ70481	193
TNJ70482	128
TNJ70483	131
TNJ70484	108
TNJ70537	123A
TNJ70539	123A
TNJ70540	184
TNJ70541	131

To Be Replaced	ECG Replacement
TNJ70634	102
TNJ70635	102
TNJ70637	123A
TNJ70638	123A
TNJ70639	123A
TNJ70640	123A
TNJ70641	160
TNJ70688	158
TNJ70691	199
TNJ71034	199
TNJ71035	128
TNJ71036	123A
TNJ71037	159
TNJ71173	108
TNJ71234	128
TNJ71248	126
TNJ71252	192
TNJ71271	199
TNJ71277	199
TNJ71498	108
TNJ71629	107
TNJ71773	159
TNJ71774	159
TNJ71937	107
TNJ71963	107
TNJ71964	161
TNJ71965	199
TNJ72146	164
TNJ72147	124
TNJ72148	130
TNJ72149	165
TNJ72150	161
TNJ72151	161
TNJ72152	193
TNJ72153	124
TNJ72154	159
TNJ72275	161
TNJ72276	233
TNJ72277	107
TNJ72278	102A
TNJ72279	107
TNJ72280	123A
TNJ72281	123A
TNJ72282	154
TNJ72283	102A
TNJ72284	103A
TNJ72285	102A
TNJ72286	175
TNJ72287	102A
TNJ72288	128
TNJ72289	102A
TNJ72318	121
TNJ72319	163A
TNJ72320	162
TNJ72368	161
TNJ72701	161
TNJ72774	187
TNJ72775	186
TNJ72783	123A
TNJ72784	123A
TNT839	108
TNT-839	108
TNT840	108
TNT-840	108
TNT841	108
TNT-841	108
TNT842	123A
TNT843	108
TNT-843	123A
TO-003	160
TO-004	160
TO-005	102A
TO-012	121
TO-014	102A
TO-015	121
TO-033	123A
TO-038	123A
TO-039	123A
TO-040	123A
TO-041	102A
TO1-101	123A
TO1-104	123A
TO1-105	123A
TO-101	100
TO101	102A
TO-102	100
TO102	102A
TO-103	102A
TO103	102A
TO-104	102A
TO104	102A
TO253	314
TO503	314
TO1003	314
TO2003	314
TO3003	314
TO4003	314
TOA1748V	1171
TOA2709P	909D
TOA2709V	909
TOA2741E	941D
TOA2741V	941
TOA2748V	1171
TOB	703A
TP34	109
TP34A	109
TP101	116
TP201	116
TP300	5874
TP302	116
TP400	5874
TP402	116
TP3638	159
TP3638A	193
TP4000AJ	4000

To Be Replaced	ECG Replacement
TP4001AJ	4001B
TP4001AN	4001B
TP4002AJ	4002B
TP4002AN	4002B
TP4008	4008B
TP4011AJ	4011B
TP4011AN	4011B
TP4011BN	4011B
TP4012AJ	4012B
TP4012AN	4012B
TP4013AJ	4013B
TP4013AN	4013B
TP4017AJ	4017B
TP4017AN	4017B
TP4018	4018B
TP4019AJ	4019B
TP4019AN	4019B
TP4022	4022B
TP4023AJ	4023B
TP4023AN	4023B
TP4025AJ	4025B
TP4025AN	4025B
TP4027AJ	4027B
TP4027AN	4027B
TP4028AJ	4028B
TP4028AN	4028B
TP4029AJ	4029B
TP4029AN	4029B
TP4035	4035B
TP4044	4044B
TP4053	4053B
TP4067-409	116
TP4067-410	199
TP4067-411	199
TP4072	4072B
TP4073	4073B
TP4075	4075B
TP4123	123A
TP4124	123A
TP4125	159
TP4126	159
TP4257	159
TP4258	159
TP4274	101
TP4275	108
TP4511	4511B
TP4512	4512B
TPS604	3037
TPS605	3038
TPS6512	123A
TPS6513	123A
TPS6514	123A
TPS6515	123A
TPS6516	159
TPS6517	159
TPS6518	159
TPS6519	159
TPS6520	123A
TPS6521	123A
TPS6522	159
TPS6523	159
TQ1	108
TQ2	108
TQ3	108
TQ4	123A
TQ5	108
TQ6	108
TQ7	108
TQ8	108
TQ9	108
TQ53	193
TQ54	193
TQ55	193
TQ57	193
TQ58	193
TQ59	193
TQ59A	193
TQ60	193
TQ60A	193
TQ61	159
TQ61A	159
TQ62	159
TQ62A	159
TQ63	129
TQ-63	159
TQ63A	129
TQ64	129
TQ-64	159
TQ64A	129
TQ5020	100
TQ5020(Sanyo)	113
TQ5021	160
TQ5022	160
TQ5023	102A
TQ5025	102A
TQ5026	102A
TQ5028	127
TQ5030	179
TQ5031	101
TQ5032	101
TQ-5032	103A&158
TQ5034	160
TQ-5034	160
TQ5035	160
TQ5036	121
TQ5038	160
TQ5039	101
TQ5044	103A
TQ-5044	103A&158
TQ5049	108
TQ5050	103A
TQ-5050	103A&158
TQ5051	102A
TQ-5051	158
TQ5052	123A

To Be Replaced	ECG Replacement
TQ-5052	123A
TQ5053	123A
TQ-5053	123A
TQ5054	123A
TQ-5054	123A
TQ5055	128
TQ-5055	128
TQ5060	123A
TQ-5060	123A
TQ5061	102A
TQ-5061	158
TQ5062	103A
TQ-5062	103A&158
TQ5063	154
TQ-5063	171
TQ5064	121
TQ-5064	121
TQ7037	1004
TQ7038	1004
TQ-PD-3055	130
TQPD3053	128
TQSAO-222	102
TR0055	159
TR-01	121
TR-01B	108
TR-01B(Penncrest)	123A
TR-01C	121
TR01C	121
TR-01C(Penncrest)	123A
TR-01E	128
TR-01E(Penncrest)	128
TR-01(Penncrest)	128
TR-02	104
TR02	121
TR02C	121
TR-02E	116
TR-03	105
TR03	105
TR03C	105
TR-03(Penncrest)	175
TR-04	102A
TR04	102
TR04C	102A
TR-04C	129
TR-04C(Penncrest)	129
TR-05	100
TR05	102
TR05C	100
TR-06	100
TR06C	160
TR-06(Penncrest)	123A
TR-07	160
TR07	160
TR07C	100
TR-07(Penncrest)	128
TR-08	101
TR08	103
TR-08C	101
TR08C	101
TR-08(Penncrest)	129
TR-09	101
TR09	103
TR-09C	101
TR09C	101
TR-016	108
TR0259-6	219
TR01014	199
TR01026	108
TR01037	123A
TR01040	199
TR01042	161
TR-01045	182
TR01053-1	159
TR01054-7	128
TR0-1057-1	182
TR0-1057-3	182
TR01057-3	184
TR0-1057-4	182
TR0-1058-1	182
TR0-1058-5	182
TR01060-7	181
TR0-1064-5	247
TR0-1064-6	247
TR0-1064-7	247
TR0-1064-8	247
TR02012	126
TR02020-2	234
TR02051-1	159
TR02051-3	159
TR02051-5	159
TR02051-6	159
TR02053-5	189
TR02053-7	189
TR02054-7	129
TR0-2057-1	183
TR0-2057-3	183
TR02057-3	185
TR0-2057-4	183
TR0-2058-1	183
TR0-2058-5	183
TR-02058-5	183
TR02060-7	180
TR02062-1	159
TR02062-6	159
TR02063-1	126
TR02063-8	159
TR0-2064-5	248
TR0-2064-6	248
TR0-2064-7	248
TR0-2064-8	248
TR06011	132
TR06014	132
TR08004	222
TR09004	718
TR09005	703A

To Be Replaced	ECG Replacement
TR0-9005	703A
TR09005	703A
TR09006	703A
TR0-9006	703A
TR09006	703A
TR09007	750
TR0-9007	750
TR09007	750
TR09008	760
TR09009	760
TR09010	746
TR0-9010	746
TR09010	746
TR09011	720
TR0-9011	720
TR09011	720
TR09012	703A
TR09017	722
TR0-9017	722
TR09017	722
TR09018	788
TR0-9018	788
TR09018	788
TR09019	801
TR0-9022	1090
TR09022	1090
TR09024	1090
TR09027	801
TR09029	708
TR09032	799
TR09033	802
TR09034	803
TR010602-1	108
TR-0105805	182
TR0573486	233
TR0573491	123A
TR0573507	229
TR0575002	109
TR0575005	110
TR1N4002	116
TR-1R26	160
TR1R26	160
TR-1R31	108
TR-1R33	123A
TR-1R35	108
TR2A	116
TR2N2614C	102A
TR-2N2641C	102A
TR-2R26	160
TR2R26	160
TR-2R31	108
TR-2R33	108
TR-2R35	108
TR2S1570LH	123A
TR2SA763	234
TR-2SC367	123A
TR-2SC371	108
TR2SC371	108
TR-2SC372	108
TR2SC372	108
TR-2SC373	123A
TR2SC373	123A
TR-2SC384	108
TR2SC384	108
TR-2SC482	128
TR2SC482	128
TR2SC535	229
TR2SC536E	199
TR2SC671	195A
TR-2SC735	123A
TR2SC735	123A
TR2SC930D	229
TR2SC1342	229
TR2SC1570LH	123A
TR2SC3677	123A
TR2SD330E	152
TR2SK55	312
TR-2SK55	312
TR-3R26	160
TR3R26	160
TR-3R31	108
TR-3R33	108
TR-3R35	108
TR-3R38	123A
TR-4R26	160
TR4R26	160
TR-4R31	128
TR-4R33	123A
TR-4R35	108
TR-4R38	159
TR4S	5008A
TR-5	121
TR-5R26	102A
TR5R26	102
TR-5R31	128
TR-5R33	123A
TR-5R35	123A
TR-5R38	123A
TR5S	5010A
TR-6R26	102A
TR6R26	102
TR-6R33	123A
TR-6R35	159
TR-6R35A	159
TR6S	5070A
TR-7GS	138A
TR-7R31	128
TR-7R35	123A
TR7SA	5014A
TR-7SA	138A
TR7SB	5071A
TR-8R35	123A
TR-9GS	139A
TR9S	139A
TR-9S	139A

To Be Replaced	ECG Replacement
TR9SA	5016A
TR-9SA	139A
TR9SB	5018A
TR9SB	139A
TR-9SB	139A
TR-10	101
TR10	101
TR-10C	101
TR10C	101
TR-11	126
TR11	100
TR-11C	160
TR11C	160
TR-12	160
TR12	160
TR-12C	160
TR12C	160
TR12S	5022A
TR12SA	5021A
TR12SB	5022A
TR12SC	5023A
TR13	160
TR-13	128
TR-13C	160
TR13C	160
TR-14	102A
TR14	102A
TR-14C	102A
TR14C	102A
TR-15	102A
TR15	102A
TR-15C	102A
TR15C	102A
TR-16	104
TR16	127
TR-16C	104
TR16C	121
TR16X2	104MP
TR-17	160
TR17	160
TR-17A	160
TR-17C	160
TR-18	160
TR18	160
TR-18C	160
TR18C	160
TR-19	159
TR19	159
TR-19	152
TR-19A	159
TR 19A	199
TR-20	159
TR20	159
TR-20A	159
TR-21	123A
TR21	123A
TR-21-6	123A
TR-21C	123A
TR21C	108
TR-22	123A
TR22	129
TR22A	129
TR-22C	123A
TR22C	108
TR-23	124
TR23	128
TR23A	129
TR-23C	124
TR23C	124
TR-24	108
TR24	108
TR-24(Philco)	123A
TR-25	128
TR25	128
TR-26	130
TR26	130
TR26-1	175
TR26C	130
TR-28	129
TR28	159
TR-28	152
TR29	219
TR-29	219
TR-30	159
TR30	159
TR-30A	159
TR31	159
TR-31B	128
TR32	194
TR33	199
TR34	127
TR35	179
TR36	181
TR37	218
TR38	108
TR43	102A
TR-43B	121
TR44	102A
TR45	102A
TR48	109
TR50	131
TR51	160
TR52	160
TR53	100
TR54	102A
TR55	100
TR56	104
TR57	105
TR62	160
TR-65	195A
TR67	165
TR68	162
TR71	102A
TR72	102A

To Be Replaced	ECG Replacement
TR-75	142A
TR-77	116
TR81	102A
TR-95	139A
TR-95(B)	139A
TR100	5982
TR103	5990
TR105(Sprague)	199
TR106(Sprague)	234
TR112	108
TR125B	145A
TR150	5896
TR151	5944
TR152	5986
TR153	5990
TR-157(Olson)	158
TR-158(Olson)	158
TR-159(Olson)	101
TR-160(Olson)	101
TR-161(Olson)	160
TR-162(Olson)	123A
TR-163(Olson)	108
TR-164(Olson)	128
TR-165(Olson)	129
TR-166(Olson)	160
TR167	101
TR-167(Olson)	159
TR-168(Olson)	126
TR-169(Olson)	102A
TR-170(Olson)	158
TR-171	161
TR-172(Olson)	104
TR-174(Olson)	105
TR-175(Olson)	124
TR-176(Olson)	181
TR-178(Olson)	121
TR-180(Olson)	175
TR182	101
TR-182(Olson)	185
TR183	101
TR-183(Olson)	127
TR184	101
TR-184(Olson)	131
TR-185(Olson)	150A
TR-186(Olson)	162
TR-187(Olson)	163A
TR-188(Olson)	175
TR193	101
TR194	101
TR200	5986
TR203	5990
TR211	101
TR212	101
TR213	101
TR214	101
TR216	101
TR251	5990
TR252	5988
TR253	5990
TR262-2	124
TR266-2	124
TR271TR26	130
TR300	5990
TR301	154
TR302	123A
TR303	5990
TR320	102
TR-320	102A
TR320A	102
TR-320A	102A
TR320AN	102A
TR321	102
TR-321	102A
TR-321A	102A
TR321(HFGH1)	100
TR323	102
TR323A	102
TR-323A	102A
TR323AN	102A
TR331	160
TR332	102
TR333	121
TR334	105
TR335	101
TR336	101
TR337	101
TR338	103
TR351	5990
TR352	5990
TR353	5990
TR383	158
TR383(HGFH-2)	102
TR400	5990
TR401	5990
TR402	5990
TR403	5990
TR482	100
TR482A	100
TR-482A	102A
TR501	5952
TR502	5992
TR508	102
TR508A	102
TR-508A	102A
TR508AN	102A
TR515T	5541
TR601	123A
TR602	5994
TR650	102
TR650A	102A
TR653	102
TR653A	102A
TR721	102
TR721A	102A
TR722	102

To Be Replaced	ECG Replacement
TR722A	102A
TR760	126
TR761	126
TR762	126
TR763	102
TR763A	102A
TR1000	129
TR-1000-2	159
TR-1000-3	128
TR-1000-7	130
TR1000A	159
TR1001	128
TR1002	129
TR1003	128
TR1004	129
TR1005	128
TR1007(Transistor)	130
TR1009	162
TR1009A	181
TR1011	123A
TR1012	129
TR1015T	5542
TR1025	223
TR1030	159
TR-1030-1	159
TR1030-1	159
TR-1030-2	159
TR1030-2	159
TR1030A	159
TR1031	123A
TR1031-1	194
TR1031-2	194
TR1032	159
TR1032-1	159
TR-1032-2	159
TR1032A	159
TR1033	123A
TR-1033-1	123A
TR1033-1	190
TR-1033-2	123A
TR1033-3	190
TR1033-4	190
TR1033-5	190
TR1033-6	190
TR1034	159
TR1034A	159
TR1036	179
TR-1036-1	183
TR-1036-2	183
TR1036-2	183
TR1036-3	183
TR-1036-3	187
TR-1037-1	182
TR1037-1	183
TR-1037-2	182
TR1037-2	182
TR1037-3	182
TR-1037-3	186
TR1038	179
TR1038-4	219
TR1038-5	281
TR1038-6	183
TR1039-4	130
TR-1039-4	130
TR1039-5	280
TR1039-6	130
TR1077	130
TR1120	5870
TR1121	5872
TR1122	5874
TR1123	5878
TR1124	5878
TR1125	5882
TR1126	5882
TR1128	5886
TR1130	5890
TR-1347	123A
TR1490	130
TR1491	130
TR1492	130
TR1493	130
TR1512-80	108
TR1591	175
TR1593	175
TR1605LP	124
TR-1993	199
TR1993-2	123A
TR2015T	5543
TR2083-42	177
TR2880	116
TR-2880	116
TR3015T	5544
TR4010	199
TR4010-2	123A
TR4015T	5545
TR4083-2327311	1039
TR4083-2327312	1039
TR4104-2327411	1041
TR4104-2327421	720
TR5528	132
TR6010	5529
TR7010	5530
TR8001	160
TR-8001	160
TR8002	160
TR-8002	160
TR8003	160
TR-8003	160
TR8004	108
TR-8004	123A
TR-8004-4	108
TR8004-4	123A
TR-8004-5	108
TR8005	124
TR-8005	124

To Be Replaced	ECG Replacement
TR8006	121
TR-8006	121
TR8007	102
TR-8007	159
TR8007A	159
TR-8007(Fisher)	159
TR-8010	107
TR8010(SCR)	5531
TR8010(Transistor)	123A
TR8014	123A
TR-8014	123A
TR8018	181
TR-8018	181
TR-8019	153
TR8019	153
TR-8020	129
TR8020	159
TR-8021	128
TR8021	123A
TR8022	190
TR-8022	190
TR8023	190
TR-8023	128
TR8024	190
TR-8024	128
TR-8025	123A
TR8025	123A
TR-8026	159
TR8026A	159
TR-8027	132
TR-8028	108
TR8028	123A
TR-8029	108
TR8029	123A
TR-8030	108
TR8030	123A
TR-8031	108
TR8031	123A
TR-8032	108
TR8034	123A
TR-8034	199
TR8035	123A
TR-8035	123A
TR8036	128
TR-8036	128
TR8037	129
TR-8037	159
TR-8038	108
TR8039	123A
TR-8039	123A
TR8040	123A
TR-8040	199
TR8042	108
TR-8042	123A
TR8043	123A
TR-8043	107
TR8055	159
TR9100	123A
TR-9100-18	123A
TR12001-4	109
TR14001-1	5081A
TR-14001-2	5130A
TR-14001-4	5135A
TR14002-6	142A
TR-14002-10	147A
TR14002-12	145A
TR14002-13	5079A
TR35144	121
TR35144A	121
TR35524	121
TR36643	128
TR38117	102A
TR39453	221
TR40603	221
TR310011	102A
TR310012	102A
TR310015	100
TR310017	102A
TR310018	102A
TR310019	160
TR310025	160
TR310026	102A
TR310065	160
TR310068	160
TR310069	160
TR310075	102A
TR310107	102A
TR310123	160
TR310124	160
TR310125	102A
TR310136	102A
TR310139	160
TR310147	160
TR310149	102A
TR310150	160
TR310153	102A
TR310155	160
TR310156	160
TR310157	160
TR310158	160
TR310159	102A
TR310160	103A
TR310161	100
TR310164	102A
TR310193	160
TR310224	160
TR310225	102
TR310227	102A
TR310230	108
TR310231	123A
TR310232	160
TR310235	102A
TR310236	103A
TR310243	123A
TR310244	108

To Be Replaced	ECG Replacement
TR310245	123A
TR310249	108
TR310250	108
TR310251	102A
TR310252	102A
TR310255	102A
TR320007	110
TR320008	109
TR320020	116
TR320022	116
TR320039	109
TR320041	109
TR320048	109
TR330027	116
TR330028	140A
TR2320063	289
TR2327031	125
TR2327041	116
TR2327203	152
TR2327293	289
TR2327312	1039
TR2327333	289
TR2327363	199
TR2327393	185
TR2327411	1041
TR2327422	720
TR2327431	222
TR2327443	199
TR2327444	199
TR2327574	223
TR2327603	184
TR2327607	184
TR2327723	153
TR2327733	138A
TR2327743	129
TR2327841	219
TR2327852	175
TR2337011	177
TR2337063	5080A
TR2337101	142A
TR2337103	144A
TR2337123	137A
TR2367161	1124
TR2367171	801
TR5320326	229
TR228735045311	108
TR228735046011	107
TR228735048617	108
TR228735048618	108
TR228735120325	132
TR228736002003	109
TR228736002004	110
TR228736003026	140A
TR228779905696	1003
TR-BC147B	123A
TR-BC149C	199
TR-BRC149C	123A
TR-C44	100
TR-C44A	100
TR-C45	102A
TR-C45A	100
TR-C70	102A
TR-C71	102A
TR-C72	102A
TR-C72(Diode)	178MP
TR-FET-1	132
TR-RR38	123A
TR-TR38	123A
TR-U1650E	132
TR-U1835E	132
TRA-2	126
TRA-4	123A
TRA4	123A
TRA-4A	123A
TRA4A	123A
TRA-4B	123A
TRA4B	123A
TRA-7R	121
TRA7R	121
TRA-7RM	121
TRA-8R	121
TRA8R	121
TRA-9R	123A
TRA9R	123A
TRA-10R	126
TRA10R	160
TRA11D(SCR)	5502
TRA-11R	126
TRA11R	160
TRA11(SCR)	5514
TRA12D(SCR)	5504
TRA-12R	126
TRA12R	160
TRA12(SCR)	5514
TRA14D(SCR)	5507
TRA14(SCR)	5515
TRA-22	126
TRA-22A	126
TRA22A	160
TRA-22B	126
TRA22B	160
TRA-23	126
TRA23	160
TRA-23A	126
TRA23A	160
TRA-23B	126
TRA23B	160
TRA-24	126
TRA-24A	126
TRA-24B	126
TRA24C	160
TRA32	102A
TRA-32	102A
TRA33	102A
TRA-33	102A

To Be Replaced	ECG Replacement
TRA34	123A
TRA-34	123A
TRA36	123A
TRA-36	123A
TRA71	5514
TRA71D	5491
TRA72	5514
TRA72D	5492
TRA74	5515
TRA74D	5494
TRA105D(SCR)	5501
TRA105(SCR)	5514
TRA705	5514
TRA705D	5491
TRAPLC711	123A
TRAPLC871	123A
TRAPLC871A	123A
TRAPLC1013	186
TRBC147B	123A
TRC44	100
TRC44A	100
TRC45	100
TRC45A	100
TRC70	102
TRC71	102
TRC72	102
TRC-P4	113
TRDS442	177
TRHA1151	1237
TRLA1230	788
TRO31	176
TRO1054-7	128
TRO-9004	718
TRO-9005	703A
TRO-9006	703A
TRO-9011	720
TRR6	137A
TRS100	154
TRS100HC	282
TRS101	154
TRS120	154
TRS125HC	282
TRS140	154
TRS140HP	171
TRS140MP	198
TRS160	154
TRS160HP	171
TRS160MP	198
TRS180	154
TRS180HP	171
TRS180MP	198
TRS200	154
TRS200HP	171
TRS200MP	198
TRS225	154
TRS225HP	171
TRS225MP	198
TRS250	154
TRS250HP	171
TRS250MP	198
TRS275	154
TRS275HP	171
TRS275MP	198
TRS301	154
TRS301HF	171
TRS301LC	198
TRS301MP	198
TRS325MP	198
TRS1005	124
TRS1005LP	124
TRS1204	198
TRS1205	124
TRS1205LP	124
TRS1404	198
TRS1405	124
TRS1405LP	124
TRS1604	198
TRS1605	124
TRS1804	198
TRS1805	124
TRS1805LP	124
TRS2004	198
TRS2005	124
TRS2005LP	124
TRS2006	198
TRS2254	198
TRS2255	124
TRS2255LP	124
TRS2504	198
TRS2505	124
TRS2505LP	124
TRS2754	198
TRS2755	124
TRS2755LP	124
TRS2804S	198
TRS2805S	198
TRS3006	198
TRS3011	154
TRS3012	154
TRS3014	171
TRS3015	198
TRS3015LP	124
TRS3016LC	124
TRS3204S	198
TRS3205S	198
TRS3254	198
TRS3255	198
TRS3742	198
TRS4016LC	124
TRS4926	198
TRS4927	198
TRS5016LC	124
TRS6016LC	124
TRSR3AM	125
TRWZ130	5022A

To Be Replaced	ECG Replacement
TS05	116
TS1	116
TS-1	102A
TS2	116
TS-2	102A
TS2A	116
TS-2A	116
TS3	125
TS-3	102A
TS4	5804
TS6	116
TS8	125
TS-13	102A
TS13	102
TS-14	102A
TS14	102
TS-15	102A
TS15	102
TS67BB	176
TS97-1	159
TS-162	102A
TS162	158
TS-163	102A
TS163	158
TS-164	102
TS164	158
TS-165	102A
TS165	158
TS-166	102A
TS166	158
TS166	158
TS-173	121
TS173	121
TS-176	121
TS176	121
TS-337	142A
TS-601	100
TS-602	100
TS-603	102A
TS603	158
TS-604	102A
TS604	158
TS-609	105
TS609	105
TS-610	104
TS610	121
TS-612	104
TS612	121
TS-613	104
TS613	121
TS-614	104
TS614	121
TS-615	160
TS-616	102A
TS616	158
TS-617	102A
TS617	158
TS-618	102A
TS618	158
TS619	158
TS-620	160
TS-621	160
TS-627	102A
TS627	158
TS-627A	160
TS-627B	160
TS-629	102A
TS629	158
TS-630	160
TS630	160
TS669A	100
TS669B	100
TS669C	160
TS669D	100
TS669E	100
TS669F	100
TS-672A	160
TS-672B	160
TS672B	160
TS-673A	160
TS673A	160
TS-673B	160
TS673B	160
TS-739	102A
TS739	158
TS-739B	102A
TS739B	158
TS-740	102A
TS740	158
TS-765	102A
TS765	158
TS-1007	102A
TS1007	158
TS-1193-736	130
TS-1266	102A
TS1266	158
TS1541	176
TS-1657	121
TS1657	121
TS-1727	102A
TS1727	158
TS-1728	102A
TS1728	158
TS1792	102A
TS2218	192
TS2219	192
TS2221	123A
TS2222	123A
TS2904	159
TS2905	159
TS2906	159
TS2907	159
TS9013	108
TS-21756640	159
TSB245	116

To Be Replaced	ECG Replacement
TSB-245	116
TSB-1000	116
TSC136	177
TSC159	116
TSC499	123A
TSC-499	199
TSC614	108
TSC695	123A
TSC722	128
TSC-722	128
TSC767	199
TSS-616-1	358
TST705899A	123A
TSTD-15	506
TSW20C	5400
TSW21C	5401
TSW22C	5402
TSW23C	5404
TSW30C	5400
TSW60C	5401
TSW100C	5402
TSW200C	5404
TSW5060	5400
TSW5061	5401
TSW5062	5402
TSW5063	5403
TSW5064	5404
TSW5065	5405
TSW5066	5405
TT2SA495-0	159
TT2SA495-0-A	159
TT2SA495-0-A	159
TT2SA495-Y	159
TT2SA495-Y-A	159
TT2SC983-0	287
TT2SC983-0-A	198
TT2SC983-0-A	171
TT2SC983-R	287
TT2SC983-R-A	198
TT2SC983-Y	287
TT2SC983-Y-A	198
TT66X26	116
TT204	108
TT-204	108
TT204A	108
TT-204A	108
TT204AB	108
TT-204AB	108
TT204B	108
TT-204B	108
TT204C	108
TT-204C	108
TT1083	121
TT-1083	121
TT1097	123A
TT-1097	123A
TU257	4029B
TUS34	132
TUS-185D	116
TUSS1R20	5079A
TV2SB126	127
TV2SB126F	121
TV2SB126V	127
TV2SB448	127
TV2SC208	123A
TV2SC1505	198
TV2SC1507	198
TV4	116
TV-6	123A
TV6.5	118
TV-7	108
TV8	125
TV13-11K60	502
TV13-12K60	503
TV15	161
TV-15	108
TV15A	161
TV15B	161
TV-15B	108
TV15C	161
TV16	108
TV17	123A
TV17A	108
TV18	108
TV-18	123A
TV19	194
TV-19	154
TV20	161
TV-20	233
TV20-10K80	505
TV20-S	505
TV-21	123A
TV21	192
TV-22	108
TV22	191
TV-23	123A
TV23	128
TV-25	191
TV-26	128
TV26	192
TV-27	103A
TV27	103
TV-28	128
TV28	192
TV-29	129
TV29	129
TV-32	108
TV32	108
TV33	161
TV-33	319
TV34	506
TV-34	319
TV35	161
TV-35	319
TV-36	161

To Be Replaced	ECG Replacement
TV-37	161
TV37	123A
TV-38	161
TV38	123A
TV-39	161
TV39	123A
TV-40	123A
TV-41	128
TV41	128
TV42	128
TV-43	128
TV-44	159
TV44	159
TV-45	128
TV45	128
TV-46	123A
TV46	123A
TV47	158
TV-47A	159
TV48	123A
TV-48	229
TV49	191
TV-49	154
TV50	161
TV-50	319
TV-51	123A
TV51	128
TV-52	123A
TV52	128
TV-53	123A
TV53	128
TV54	161
TV-54	233
TV55	108
TV-55	233
TV-56	123A
TV56	123A
TV57	107
TV-57	159
TV57A	123A
TV58	107
TV-58	123A
TV58A	123A
TV-59	128
TV59	128
TV59A	123A
TV-60	123A
TV60	107
TV60A	123A
TV-61	102
TV61	158
TV-61A	102A
TV62	172A
TV-65	123A
TV65	123A
TV-66	123A
TV-67	128
TV-68	123A
TV-70	154
TV70	154
TV-70B	128
TV71	123A
TV72	159
TV-73	186
TV73	210
TV-74	187
TV-75	186
TV75	210
TV-77	233
TV80	132
TV81	233
TV-82	186
TV-83	132
TV-84	123A
TV-85	171
TV-87	159
TV92	123A
TV-92	123A
TV-93	159
TV106	127
TV108	163A
TV109	175
TV111	127
TV-112	196
TV112	196
TV113	124
TV114	127
TV-114	127
TV115	108
TV-115	152
TV116	197
TV-116	153
TV117	196
TV-117	152
TV118	163A
TV-118	165
TV-119	165
TV-120	157
TV121	162
TV-121	164
TV122	124
TV-124	165
TV124	165
TV-125	165
TV-215	513
TV215(I.R.)	513
TV695	118
TV1000	108
TV2403	108
TV2404	108
TV2419	116
TV2428	102A
TV2429	102A
TV2434	102A

To Be Replaced	ECG Replacement
TV2455	160
TV2479	160
TV2496	116
TV-2496	116
TV4152	100
TV6080	128
TV24102	108
TV24103	112
TV24103A	112
TV24103B	112
TV24103C	112
TV24103D	112
TV24104	116
TV-24104	116
TV24115	102A
TV24122	110
TV24125	116
TV-24125	116
TV24136	116
TV24137	160
TV24142	127
TV24143	103A
TV24148	108
TV24152	100
TV24154	102A
TV24155	116
TV24156	102A
TV24158	160
TV24159	112
TV24160	161
TV24161	161
TV24162	127
TV24163	127
TV24164	154
TV24166	160
TV24167	506
TV24169	506
TV24172	160
TV24182	112
TV24189	102A
TV24190	113
TV24191	116
TV24193	116
TV24194	102A
TV24200	116
TV24203	108
TV24204	108
TV24209	161
TV24210	107
TV24211	175
TV24214	159
TV24214A	159
TV24215	123A
TV24216	123A
TV24217	506
TV24218	516
TV24219	506
TV24221	125
TV24222	116
TV24224	116
TV24225	156
TV24226	113
TV24229	160
TV24230	160
TV24232	116
TV24234	116
TV24237	120
TV24239	160
TV24266	116
TV-24266	116
TV24272	138A
TV24273	110MP
TV24278	116(2)
TV24281	123A
TV24282	116
TV24283	116
TV24285	166
TV24292	116
TV24298	115
TV24313	108
TV24337	121
TV24341	127
TV24351	160
TV24363	159
TV24363A	159
TV24370	102A
TV24372	123A
TV24380	107
TV24382	107
TV24383	107
TV24385	107
TV24387	108
TV24399	161
TV24435	154
TV24436	161
TV24437	161
TV24438	107
TV24453	123A
TV24454	123A
TV24458	123A
TV24468	127
TV24487	175
TV24495	159
TV24495A	159
TV24499	154
TV24540	503
TV24554	177
TV24568	127
TV24571	161
TV24573	108
TV24574	108
TV24576	123A
TV24582	116
TV24586	116
TV24589	108

To Be Replaced	ECG Replacement
TV24599	102A
TV24617	506
TV24648	506
TV24649	174
TV24650	503
TV24651	5800
TV24655	123A
TV24678	121
TV24681	174
TV24684	108
TV24803	116
TV24806	107
TV24941	116
TV24942	125
TV24945	102A
TV24979	116
TV24981	5071A
TV24983	103A
TV24984	102A
TV24985	115
TV24987	113
TV34232	116
TV241013	110(6)
TV241072	1004
TV241073	116
TV241074	116
TV241077	123A
TV241078	123A
TVBB10	506
TVC-3	116
TVC-6	120
TVC6	120
TVC-MK3800	1136
TVCM-1	705A
TVCM-2	790
TVCM-3	707
TVCM-4	708
TVCM-5	709
TVCM-6	718
TVCM-7	720
TVCM-8	714
TVCM-9	715
TVCM-10	722
TVCM-11	712
TVCM-12	719
TVCM-13	721
TVCM-14	734
TVCM-15	731
TVCM-16	723
TVCM-17	735
TVCM-18	737
TVCM-19	744
TVCM-20	736
TVCM-21	739
TVCM-22	790
TVCM-23	732
TVCM-25	804
TVCM-26	804
TVCM-27	738
TVCM-28	742
TVCM-29	743
TVCM-33	729
TVCM-34	791
TVCM-35	740A
TVCM-39	788
TVCM-65	804
TVCM-81	1155
TVCM-500	7400
TVCM-S	709
TVDS1M	116
TVH-526	114
TVH538	113
TVM-026	536
TVM7K705M	113
TVM35	116
TVM56	116
TVM-108	501A
TVM108	501A
TVM153	522
TVM511	116(3)
TVM-511	116
TVM-526	113
TVM526	114
TVM529	166
TVM-530	178MP
TVM531	503
TVM533	504
TVM535	506
TVM537	506
TVM-537	119
TVM538	113
TVM540	505
TVM546	507
TVM550	116
TVM553	502
TVM554	113
TVM554A	178MP
TVM563	116
TVM567	502
TVM569	503
TVM570	505
TVM-778	500A
TVM778	500A
TVM-EH2C	116
TVM-EH2C11	116
TVM/HS15/16	502
TVM-K112C	113
TVM-K-112C	178MP
TVM-L00.09M1115	119
TVM-M204B	116
TVM-PH9D22/1	116
TVM-PH9D522/11	116(4)
TVM-PT6D22/1	166
TVM-PT6d22/1	116
TVM-TC0.2P	114

To Be Replaced	ECG Replacement
TVM-TC0.2P11/2	116
TVM-TC0.2P1	507
TVM-TK705M	113
TVM-TK-705M	113
TVMHS151b	116
TVMK112C	113
TVML00.09m1115	116
TVMM204B	116
TVMPH9DZ2/1	116
TVMTC00921-3	114
TVS0A01-11S	5074A
TVS-0A70	109
TVS0A70	109
TVS0A71	116
TVS-0A81	109
TVS-0A90	109
TVS0A90	109
TVS-0A91	109
TVS0A91	109
TVS-0A95	109
TVS-0V-02	506
TVS-1N82G	112
TVS1N741A	142A
TVS1N741H	142A
TVS1N4002	116
TVS1N4741A	141A
TVS1P80	125
TVS-1S18	108
TVS-1S750	112
TVS1S750	112
TVS1S954	177
TVS-1S1211	177
TVS1S1850	116
TVS-1S1850	116
TVS-1S1893	5800
TVS-1S1906	116
TVS1S1906	116
TVS-1S1922	5800
TVS1S1950	116(2)
TVS1S2076	177
TVS-2B-2C	506
TVS-2CS645A	123A
TVS-2S288A	107
TVS2S1664	274
TVS-2SA71B	102A
TVS-2SA103	160
TVS-2SA171	100
TVS-2SA385	102A
TVS-2SA385A	102A
TVS-2SA385L	102A
TVS2SA543	192
TVS2SA546	129
TVS-2SA564	159
TVS2SA564	159
TVS-2SA564A	159
TVS2SA564A	159
TVS2SA564C	159
TVS2SA564-O	159
TVS-2SA564P	159
TVS2SA564P	159
TVS2SA564PY	159
TVS2SA564Q	159
TVS2SA607	159
TVS2SA609	159
TVS2SA768	153
TVS-2SB126	121
TVS2SB126	121
TVS-2SB126F	121
TVS-2SB126V	127
TVS-2SB171	102A
TVS2SB171	158
TVS2SB171A	102A
TVS-2SB171A	158
TVS2SB171B	102A
TVS-2SB172	102A
TVS-2SB172A	100
TVS-2SB172F	102A
TVS-2SB176	102A
TVS-2SB234	102A
TVS-2SB324	158
TVS2SB324	102A
TVS-2SB448	127
TVS2SB449	121
TVS-2SB449F	121
TVS2SB546	292
TVS-2SC58	154
TVS-2SC58A	154
TVS-2SC185A	108
TVS-2SC208	108
TVS-2SC287A	108
TVS2SC288A	108
TVS-2SC313	161
TVS-2SC429A	107
TVS-2SC446	108
TVS-2SC466	161
TVS2SC466	108
TVS-2SC469A	107
TVS-2SC526	154
TVS-2SC538	123A
TVS2SC538	108
TVS-2SC538A	123A
TVS2SC538A	123A
TVS-2SC562	161
TVS2SC562	161
TVS-2SC563	161
TVS2SC563	161
TVS-2SC563A	161
TVS2SC564	159
TVS-2SC564	159
TVS2SC564-O	159
TVS2SC564O	159
TVS2SC564R	159
TVS-2SC582	128
TVS-2SC582A	128
TVS-2SC605	108

To Be Replaced	ECG Replacement
TVS-2SC606	108
TVS-2SC644	107
TVS2SC644	123A
TVS-2SC645	107
TVS2SC645	108
TVS-2SC645A	107
TVS2SC645A	108
TVS-2SC645B	107
TVS2SC645B	123A
TVS-2SC645C	107
TVS2SC645C	108
TVS-2SC646	181
TVS2SC647	130
TVS2SC647A	101
TVS2SC647B	165
TVS2SC647C	165
TVS2SC647D	165
TVS2SC647E	165
TVS2SC647-O	165
TVS2SC647-P	165
TVS2SC647Q	165
TVS2SC647R	165
TVS-2SC683	161
TVS2SC683	108
TVS-2SC683V	161
TVS-2SC684	161
TVS2SC684	123A
TVS-2SC687	162
TVS2SC696	128
TVS-2SC762	161
TVS2SC762	108
TVS-2SC828	123A
TVS2SC828	123A
TVS-2SC828A	123A
TVS2SC828A	123A
TVS2SC828P	123A
TVS-2SC828Q	123A
TVS2SC828Q	108
TVS2SC828R	123A
TVS2SC829B	107
TVS-2SC840	175
TVS2SC840	124
TVS-2SC840A	175
TVS2SC840A	124
TVS2SC840C	175
TVS-2SC901	163A
TVS2SC901	162
TVS2SC920-0Q	108
TVS-2SC948	161
TVS2SC968	123
TVS2SC1255	128
TVS2SC1255HF	128
TVS2SC1256	129
TVS2SC1256HG	129
TVS2SC1505	198
TVS2SC1505I	198
TVS2SC1507	198
TVS2SC1507K	198
TVS2SC1507L	198
TVS2SC1520	198
TVS2SC1520I	198
TVS2SC1629A	238
TVS2SC1664	274
TVS2SC1664R	274
TVS2SC1826	196
TVS2SC1828	175
TVS2SC5640	159
TVS2SD201M	130
TVS2SD226	175
TVS-2SD226A	175
TVS2SD226A	175
TVS2SD226B	175
TVS2SD226C	175
TVS2SD226D	175
TVS2SD226O	175
TVS2SD226-O	175
TVS2SD226P	175
TVS2SD401	291
TVS2SD968	128
TVS5B-2-H5W	506
TVS5-B-HW5	506
TVS5N76642N	709
TVS10D	116
TVS10D1	506
TVS10D1(Pwr. Rect.)	116
TVS10D2	506
TVS10D8	125
TVS-10D8	125
TVS10DC4	116
TVS10DC4R	116
TVS25A103	160
TVS25B172	102
TVS25B448	127
TVS25C208	123A
TVS25C562	123A
TVS25C645	123A
TVS-82G	112
TVS-182G	112
TVS-185D	116
TVS550	116
TVS-828A	123A
TVS828A	123A
TVS-1303	159
TVS1850	116
TVS25126F	121
TVS-A910	507
TVS-AN225	1062
TVS-AN227	1063
TVS-AN241	712
TVS-AN241D	712
TVS-CS1255H	123A
TVS-CS1255HF	123A
TVS-CS1256HG	192
TVS-CS1303	159
TVS-CS1303A	159

To Be Replaced	ECG Replacement
TVS-DG-1N-R	116
TVS-DG1NR	506
TVS-DS-1K	116
TVS-DS1K	116
TVS-DS1M	116
TVS-DS-1M	116
TVS-DS2K	116
TVS-ET1P	116
TVS-FR1MD	116
TVS-FR1P	506
TVS-FR-1P	116
TVS-FR-1P(FR1P)	116
TVS-FR1PC	116
TVS-FR1-PC	116
TVS-FR2M	116
TVS-FR2P	506
TVS-FR2PC	156
TVS-FR-2PC	116
TVS-FR10	125
TVS-FT1N	506
TVS-FT-1N	125
TVS-FT1P	506
TVS-FT-1P	116
TVS-FT1PC	506
TVS-FT10	125
TVS-FU1N	116
TVS-H-339W	505
TVS-H-399W	505
TVS-HF-SD-1C	506
TVS-HF-SD1Z	506
TVS-HF-SD1ZC	119
TVS-HF-SD-12	116
TVS-HFSD1Z	116
TVS-HS25/16	503
TVS-K112C	113
TVS-KC2CP12/1	116
TVS-KC2DP12/2	116
TVS-KC2dp12/2	116
TVS-KC2-LP	116
TVS-KC20P12/1	116
TVS-MPC23C	1046
TVS-0A70	109
TVS-0A81	177
TVS-0A90	109
TVS-0A91	109
TVS-0A95	177
TVS-0V-02	116
TVS-PC02P11/2	116
TVS-PCD2P11/2	116
TVS-RD5A	135A
TVS-RD7A	138A
TVS-RD11A	5074A
TVS-RD13A	142A
TVS-RD13D	142A
TVS-RD13M	142A
TVS-RD13P	142A
TVS-RD29AN	147A
TVS-RD(M)(P)D	142A
TVS-S1B02-03C	116
TVS-S1B02-03CR	116
TVS-S8-2C	125
TVS-S82	112
TVS-SB-2C	506
TVS-SB-20	125
TVS-SD1A	116
TVS-SD-1B	125
TVS-SD1B	125
TVS-SD-1B(Boost)	506
TVS-SD82	112
TVS-SD82A	112
TVS-SF-1	506
TVS-SN76665N	712
TVS-TC009M11/10	116
TVS-TC009M21/3	114
TVS-TIS18	108
TVS-UFSD-1	116
TVS-UPC23C	1046
TVS-ZB1-11	141A
TVS-ZB1-15	145A
TVSA031.07RE	5071A
TVSAFS01	506
TVSAFSD1	506
TVSAN155	147A
TVSAN220	711
TVSAN225	739
TVSAN241	712
TVSAN241D	712
TVSAW01-11	5074A
TVSB01-02	5074A
TVSB01-2	177
TVSB0102	116
TVSB24-06	506
TVSB24-06C	506
TVSB24-06D	506
TVSBAX-13	177
TVSBAX13	177
TVSBAZ13	507
TVSBB2	506
TVSBB2A	506
TVSBB10	506
TVSBBE	116
TVSC0410	125
TVSC1255H	128
TVSCA3126	797
TVSCA3137	1176
TVSCS1255HF	192
TVSCS1256HG	193
TVSD1K	116
TVSD52K	116
TVSDG1NR	116
TVSDS1M	156
TVSDS-2K	125
TVSDS2K	156
TVSDS2M	116
TVSEA06	116(4)

To Be Replaced	ECG Replacement
TVSEQA01-05T	136A
TVSEQA01-06S	5075A
TVSEQA01-125	142A
TVSEQB01-12	142A
TVSEQB01-15	145A
TVSER824-06	506
TVSERB24-06	506
TVSERB24-06A	506
TVSERB24-06B	506
TVSERB24-06C	506
TVSERB2406C	506
TVSERC04-10	125
TVSESA06	116
TVSFG2PC	506
TVSFR1P	116
TVSFR1PC	116
TVSFR2-005	506
TVSFR2-02	506
TVSFR2-02C	506
TVSFR2-02G	506
TVSFR2-04	506
TVSFR2-06	116
TVSFR2-10	506
TVSFT1M	506
TVSFT-1P	506
TVSFT1P	116
TVSFT1P	116
TVSFU1N	116
TVSGP2-354	177
TVSHA-1	506
TVSHA-1/HF-1	506
TVSHF-1	506
TVSHF1	506
TVSHF-1/HF-1	506
TVSHFD1Z	506
TVSHFSD1	506
TVSHFSD-1A	116
TVSHFSD-1C	506
TVSHFSD-1/HF-1	506
TVSHFSD-1Z	506
TVSHFSD1Z	506
TVSHFSD12C	116
TVSHS7/1	118
TVSIS1850	116
TVSJA1200	123A
TVSJL41A	116
TVSK112C	113
TVSM1-02	116
TVSM51247	1173
TVSM51247P	1173
TVSM53210P	7410
TVSMA26	177
TVSMPC-23C	1046
TVSMPC595C	1186
TVSMPC596C	1187
TVSMPC596C2	1187
TVSMR1C	125
TVSMR-1M	125
TVSOA71	116
TVSPC23C	1046
TVSPC1380C	1196
TVSPCD2P11/2	116
TVSQ01-06SB	5070A
TVSQ01-07RE	5071A
TVSQA01-06SB	5070A
TVSQA01-07R	145A
TVSQA01-07RE	5071A
TVSQA01-11SE	5074A
TVSQA01-12S	142A
TVSQA01-14RD	144A
TVSQA01-15RB	145A
TVSQA01-25A	5080A
TVSQA01-25R	5080A
TVSQA01-25RA	5081A
TVSQA01-115E	5074A
TVSQA01-SE	5074A
TVSQB01-11ZB	5074A
TVSQB01-15ZB	145A
TVSQB01-18	5077A
TVSRA1A	177
TVSRA1Z	506
TVSRA-1Z	506
TVSRA1ZC	506
TVSRA26(RECT)	116
TVSRA26(ZENER)	140A
TVSRC2	525
TVSRD4AM	134A
TVSRD4R7EB	5009A
TVSRD5A	135A
TVSRD5AK	135A
TVSRD5.1EC	135A
TVSRD6A	134A
TVSRD9AL	139A
TVSRD11	140A
TVSRD11A	140A
TVSRD13AL	143A
TVSRD27EB	146A
TVSRH1	506
TVSRM1Z	116
TVSRM25	5089A
TVSRM26	116
TVSRM26V	5089A
TVSRMP	116
TVSRMP5020	116
TVSRU2	125
TVSS1D30-15	506
TVSS1P20	116
TVSS1R8D	116
TVSS1R20	116
TVSS1R80	116
TVSS3-2	116
TVSS3G4	125
TVSS4C	116
TVSS15	506

To Be Replaced	ECG Replacement
TVSS34	506
TVSS-34	506
TVSS34RECT	116
TVSSA2B	116
TVSSA-2B	125
TVSSA-2H	117
TVSSA2H	156
TVSSA71B	102
TVSSB-2	506
TVSSB2-C	506
TVSSB2C	506
TVSSB-2T	117
TVSSD1A	116
TVSSD-1Y	116
TVSSD82A	112
TVSSF-1	125
TVSSID30-15	125
TVSSJE5472-1	157
TVSSM1-02	116
TVSSN7666N	712
TVSSN76642N	709
TVSSN76665	712
TVSSN76666N	712
TVSSUF2	116
TVSSV02	116
TVSSV03	601
TVSSV04	177(4)
TVSTD15M	551
TVSUF2	506
TVSUFSD-1	506
TVSUFSD1	506
TVSUFSD1F	116
TVSUPC23C	1046
TVSUPC574J	147A
TVSUPC595C	1186
TVSUPC596C2	1187
TVSUPC1380C	1196
TVSVPC23C	1046
TVSVPC1380C	1196
TVSW04	166
TVSW04M	166
TVSWF2	116
TVSWZ270	146A
TVSYZ080	5072A
TVSYZ-080	5072A
TVSZB1-6	5070A
TVSZB1-11	5074A
TVSZB1-15	5075A
TVSZB1-23	5081A
TVSZB1-27	146A
TVSZB1-29	146A
TW3	116
TW5	116
TW6N100CZ	5673
TW6N200CZ	5673
TW6N300CZ	5675
TW6N400CZ	5675
TW6N500CZ	5676
TW6N600CZ	5677
TW8N100CZ	5682
TW8N200CZ	5683
TW8N300CZ	5684
TW8N400CZ	5685
TW8N500CZ	5686
TW8N600CZ	5697
TW10	116
TW10N100CZ	5682
TW10N200CZ	5683
TW10N300CZ	5684
TW10N400CZ	5685
TW10N500CZ	5686
TW10N600CZ	5697
TW12N400CX	5695
TW12N600CX	5697
TW20	116
TW30	116
TW38	156
TW40	116
TW50	116
TW60	116
TW80	125
TW100	125
TW135	106
TWV	116
TX1N645	116
TX1N647	116
TX1N3190	116
TX1N3191	116
TX27A	146A
TX50	318
TX75	318
TX100	317
TX100-1	123A
TX-100-1	123A
TX100-2	123A
TX-100-2	123A
TX100-3	123A
TX-100-3	124
TX100-4	128
TX-100-4	128
TX100-5	124
TX101-8	124
TX-101-8	124
TX101-9	128
TX101-11	124
TX101-11	124
TX-101-11	124
TX101-12	123A
TX-101-12	123A
TX102-1	123A
TX102-2	123A
TX102-4	124
TX-102-4	124
TX103-1	104
TX104-3	158

To Be Replaced	ECG Replacement
TX-104-3	158
TX105-4	128
TX106-1	102A
TX-106-1	158
TX107-1	123A
TX-107-1	123A
TX107-3	123A
TX-107-3	107
TX107-4	123A
TX-107-4	123A
TX107-5	123A
TX-107-5	123A
TX107-6	123A
TX-107-6	123A
TX107-10	123A
TX-107-10	123A
TX107-12	123A
TX-107-12	107
TX107-13	124
TX-107-13	124
TX107-16	123A
TX-107-16	123A
TX108-1	123A
TX-108-1	123A
TX111-1	124
TX-111-1	124
TX112-1	123A
TX-112-1	123A
TX-119-1	123A
TX120	107
TX121	159
TX122	159
TX-122-1	159
TX122-1	159
TX122-1A	159
TX-123	172A
TX123-1	172A
TX-124	128
TX124	128
TX124-1	123A
TX-125	129
TX125	159
TX125-1	129
TX-126-1	103A
TX-128-1	123A
TX128-1	128
TX-134-1	159
TX134-1	129
TX-134-1A	159
TX135	128
TX-135	128
TX136	129
TX-136	129
TX138	128
TX-138	123A
TX139	129
TX-139	129
TX140	128
TX-140	128
TX-141	123A
TX141	107
TX-145	5452
TX-183S	162
TX-1005	175
TX1005	124
TXL-80	318
TXL-100	317
TY-107-4	123A
TY-107-12	123A
TZ5.6	136A
TZ6	121
TZ7	121
TZ8	121
TZ-8	121
TZ8	121
TZ8.2	139A
TZ9.1	139A
TZ9.1A	139A
TZ9.1B	139A
TZ9.1C	139A
TZ10	102A
TZ12	142A
TZ12A	142A
TZ12B	142A
TZ12C	142A
TZ15	145A
TZ15A	145A
TZ-15A	145A
TZ-15AB	145A
TZ15B	145A
TZ-15BC	145A
TZ15C	145A
TZ-15C	145A
TZ27	146A
TZ27A	146A
TZ27-A	146A
TZ27AA	146A
TZ27B	146A
TZ27BA	146A
TZ27C	146A
TZ27CJ	146A
TZ33	147A
TZ33A	147A
TZ33B	147A
TZ33C	147A
TZ62	149A
TZ62A	149A
TZ62B	149A
TZ62C	149A
TZ81	199
TZ82	150A
TZ82A	150A
TZ82B	5153A
TZ82C	150A
TZ110	151A

To Be Replaced	ECG Replacement
TZ110A	151A
TZ110B	151A
TZ110C	151A
TZ115i	199
TZ140B	5160A
TZ543	159
TZ551	159
TZ552	193
TZ553	193
TZ554	193
TZ581	211
TZ582	211
TZ1151	199
TZ1152	199
TZ1153	177
TZ1180	123A
TZ1182	123A
TZC6.8B	5120A
TZC7.5B	5121A
TZC8.2B	5122A
TZC9.1B	5124A
TZC10B	5125A
TZC11B	5126A
TZC13B	5128A
TZC14B	5129A
TZC15B	5130A
TZC17B	5132A
TZC18B	5133A
TZC19B	5134A
TZC20B	5135A
TZC22B	5136A
TZC24B	5137A
TZC25B	5138A
TZC27B	5139A
TZC30B	5141A
TZC33B	5142A
TZC36B	5143A
TZC39B	5144A
TZC43D	5145A
TZC47B	5146A
TZC51B	5147A
TZC56B	5148A
TZC62B	5150A
TZC68B	5151A
TZC75B	5152A
TZC91B	5155A
TZC100B	5156A
TZC110B	5157A
TZC120B	5158A
TZC130B	5159A
TZC150B	5161A
TZC160B	5162A
TZC200B	5166A
TZPD3.3	5066A
U	116
U01	188
U04	190
U05B	156
U05-B	156
U05B	156
U05C	156
U05E	156
U05G	156
U06	506
U06C	506
U06E	116
U0513	156
U1S102	116
U2N34	102
U2N34A	102A
U2N96	102
U2N96A	102A
U2N474A	123
U2S93	126
U2SB267	102A
U2T85	103A
U5A7064354	780
U5B770939X	909
U5B771039X	910
U5B771639X	716
U5B990029	9900
U5B990329	9903
U5B990329X	9903
U5B990429	9904
U5B990429X	9904
U5B990529	9903
U5B990529X	9905
U5B990629	9906
U5B990629X	9906
U5B990729	9907
U5B990729X	9907
U5B990829	9908
U5B990829X	9908
U5B990929	9909
U5B990929X	9909
U5B991029	9910
U5B991029X	9910
U5B991129	9911
U5B991129X	9911
U5B991229	9912
U5B991229X	9912
U5B991329	9913
U5B991329X	9913
U5B991429	9914
U5B991429X	9914
U5B992129	9921
U5B992159X	9921
U5B992329	9923
U5B992359X	9923
U5B997429	9974
U5B997429X	9974
U5B7709393	909
U5B7710393	910
U5B7716393	716
U5B7716394	716

To Be Replaced	ECG Replacement
U5B7725391	925
U5B7725393	925
U5B7740393	940
U5B7741393	941
U5B7749394	949
U5D770331X	703A
U5D770339X	703A
U5D990021	9900
U5D990029X	9900
U5D7703312	703A
U5D7703393	703A
U5D7703394	703A
U5E7064394	780
U5E7746394	707
U5F771139X	911
U5F991529	9915
U5F991529X	9915
U5F992629	9926
U5F992659X	9926
U5F992729	9927
U5F992759X	9927
U5F7711393	911
U5F7715393	915
U5F7723393	923
U5F7723393	923
U5F7746394	707
U5F7747393	947
U5M7749394	949
U5R7723393	923
U5T7725393	925
U5Z7703394	703A
U6A180659X	9806
U6A740059X	7400
U6A909359X	9093
U6A909459X	9094
U6A909759X	9097
U6A909959X	9099
U6A910959X	9109
U6A911059X	9110
U6A911159X	9111
U6A911259X	9112
U6A913559X	9135
U6A913759X	9137
U6A915759X	9157
U6A915859X	9158
U6A939059X	7490
U6A993059X	9930
U6A993159X	9931
U6A993259X	9932
U6A993359X	9933
U6A993559X	9935
U6A993659X	9936
U6A993759X	9937
U6A994159X	9941
U6A994459X	9944
U6A994559X	9945
U6A994659X	9946
U6A994859X	9948
U6A994959X	9949
U6A995059X	9950
U6A995159X	9951
U6A996159X	9961
U6A996259X	9962
U6A996359X	9963
U6A7045312	912
U6A7046312	912
U6A7075354	723
U6A7136354	737
U6A7410759X	74107
U6A7709393	909D
U6A7710393	910D
U6A7711393	911D
U6A7720354	744
U6A7720395	744
U6A7723393	923D
U6A7729394	720
U6A7730393	725
U6A7732394	718
U6A7739312	725
U6A7739393	725
U6A7739394	725
U6A7741393	941D
U6A7742393	979
U6A7746393	790
U6A7746394	790
U6A7767394	722
U6A7780394	714
U6A7781394	715
U6AA7780394	714
U6AH00059X	74H00
U6AH00159X	74H01
U6AH00459X	74H04
U6AH00559X	74H05
U6AH00859X	74H08
U6AH01059X	74H10
U6AH01159X	74H11
U6AH02059X	74H20
U6AH02159X	74H21
U6AH03059X	74H30
U6AH04059X	74H40
U6AH05059X	74H50
U6AH05159X	74H51
U6AH05259X	74H52
U6AH05359X	74H53
U6AH05459X	74H54
U6AH05559X	74H55
U6AH06059X	74H60
U6AH06159X	74H61
U6AH06259X	74H62
U6AH07159X	74H71
U6AH07259X	74H72
U6AH07359X	74H73
U6AH07459X	74H74
U6AH10159X	74H101
U6AH10259X	74H102

To Be Replaced	ECG Replacement
U6AH10359X	74H103
U6AH10859X	74H108
U6AH18359X	74H183
U6AN00059X	7400
U6AN00159X	7401
U6AN00259X	7402
U6AN00359X	7403
U6AN00459X	7404
U6AN00559X	7405
U6AN00659X	7406
U6AN00759X	7407
U6AN00859X	7408
U6AN00959X	7409
U6AN01059X	7410
U6AN01159X	7411
U6AN01259X	7412
U6AN01359X	7413
U6AN01459X	7414
U6AN01659X	7416
U6AN01759X	7417
U6AN02059X	7420
U6AN02159X	7421
U6AN02559X	7425
U6AN02659X	7426
U6AN02759X	7427
U6AN03059X	7430
U6AN03259X	7432
U6AN03759X	7437
U6AN03859X	7438
U6AN03959X	7439
U6AN04059X	7440
U6AN05059X	7450
U6AN05159X	7451
U6AN05359X	7453
U6AN05459X	7454
U6AN06059X	7460
U6AN07059X	7470
U6AN07259X	7472
U6AN07359X	7473
U6AN07459X	7474
U6AN08059X	7480
U6AN08259X	7482
U6AN09059X	7490
U6AN09159X	7491
U6AN09359X	7493A
U6AN09559X	7495
U6AN10759X	74107
U6AN12259X	74122
U6AN13259X	74132
U6AN17659X	74176
U6AN17759X	74177
U6AN18059X	74180
U6AN19659X	74196
U6AN19759X	74197
U6AN993259X	9932
U6AN993359X	9933
U6AS00059X	74S00
U6AS00359X	74S03
U6AS00459X	74S04
U6AS00559X	74S05
U6AS01059X	74S10
U6AS01159X	74S11
U6AS01559X	74S15
U6AS02059X	74S20
U6AS02259	74S22
U6AS04059X	74S40
U6AS06459X	74S64
U6AS06559X	74S65
U6AS07459X	74S74
U6AS11359X	74S113
U6AS11459X	74S114
U6AS14059X	74S140
U6B7066354	728
U6B7414159X	74141
U6B7780394	714
U6BA01559X	7441
U6BA04259X	74182
U6BH02259X	74H22
U6BH07659X	74H76
U6BH10659X	74H106
U6BN02359X	7423
U6BN04259X	7442
U6BN04359X	7443
U6BN04459X	7444
U6BN07559X	7475
U6BN07659X	7476
U6BN08359X	7483
U6BN08559X	7485
U6BN09459X	7494
U6BN15359X	74153
U6BN15559X	74155
U6BN15659X	74156
U6BN17559X	74175
U6BS11259X	74S112
U6BS13359X	74S133
U6BS13459X	74S134
U6BS15359X	74S153
U6BS15759X	74S157
U6BS15859X	74S158
U6BS17559X	74S175
U6BS19459X	74S194
U6E7729394	720
U6E7739393	725
U6NA01159X	74154
U6NA04159X	74181
U6NN15059X	74150
U6NN19859X	74198
U6NN19959X	74199
U7AH08759X	74H87
U7AN15259X	74152
U7AN16459X	74164
U7AN17859X	74178
U7B9366659X	74193
U7B7758354	743
U7BA04559X	7445

To Be Replaced	ECG Replacement
U7BN04859X	7448
U7BN09659X	7496
U7BN046591	7446
U7BN12359X	74123
U7BN14159X	74141
U7BN14559X	74145
U7BN15159X	74151
U7BN16559X	74165
U7BN16659X	74166
U7BN17059X	74170
U7BN17459X	74174
U7BN17959X	74179
U7BN19059X	74190
U7BN19159X	74191
U7BN19259X	74192
U7BN19359X	74193
U7F7065354	712
U7F7065394	712
U7F7729394	720
U7F7732394	718
U7F7746394	790
U7F7767394	722
U7F7780394	714
U7F7781394	715
U7F7463394	790
U7F7803394	714
U8A99238X	9923
U8A990028	9900
U8A991428	9914
U8A992328	9923
U8B770339X	703A
U8B7703394	703A
U8B7737394	705A
U8F7737394	705A
U8F7746394	705A
U9A9N0459X	7404
U9A9N0759X	7407
U9A9N8659X	7486
U9A74259X	979
U9A180059X	9800
U9A180159X	9801
U9A180259X	9802
U9A180359X	9803
U9A180459X	9804
U9A180559X	9805
U9A180659X	9806
U9A180759X	9807
U9A180859X	9808
U9A180959X	9809
U9A181059X	9810
U9A181159X	9811
U9A181259X	9812
U9A181359X	9813
U9A181459X	9814
U9A741059X	7410
U9A749359X	7493A
U9A900159X	74105
U9A909359X	9093
U9A909459X	9094
U9A909759X	9097
U9A909959X	9099
U9A913559X	9135
U9A913759X	9137
U9A915759X	9157
U9A915859X	9158
U9A938259X	7482
U9A993059X	9930
U9A993159X	9931
U9A993259X	9932
U9A993359X	9933
U9A993559X	9935
U9A993659X	9936
U9A993759X	9937
U9A994159X	9941
U9A994459X	9944
U9A994559X	9945
U9A994659X	9946
U9A994859X	9948
U9A994959X	9949
U9A995059X	9950
U9A995159X	9951
U9A996159X	9961
U9A996259X	9962
U9A996359X	9963
U9A7064354	783
U9A7075394	723
U9A7136354	737
U9A7410759X	74107
U9A7709393	909D
U9A7711393	911D
U9A7720354	744
U9A7720395	744
U9A7723393	923D
U9A7729394	720
U9A7741393	941D
U9A7746394	790
U9A7767394	722
U9A7781394	715
U9AC00159X	4001B
U9AC00259X	4002B
U9AC01159X	4011B
U9AC01259X	4012B
U9AC01359X	4013B
U9AC02359X	4023B
U9AC02559X	4025B
U9AC02759X	4027B
U9AC03059X	4030B
U9AC04959X	4049B
U9AC05059X	4050B
U9AH00059X	74H00
U9AH00159X	74H01
U9AH00459X	74H04
U9AH00559X	74H05
U9AH00859X	74H08
U9AH01059X	74H10

To Be Replaced	ECG Replacement
U9AH01159X	74H11
U9AH02059X	74H20
U9AH02159X	74H21
U9AH02259X	74H22
U9AH03059X	74H30
U9AH04059X	74H40
U9AH05059X	74H50
U9AH05159X	74H51
U9AH05259X	74H52
U9AH05359X	74H53
U9AH05459X	74H54
U9AH05559X	74H55
U9AH06059X	74H60
U9AH06159X	74H61
U9AH06259X	74H62
U9AH07159X	74H71
U9AH07259X	74H72
U9AH07359X	74H73
U9AH07459X	74H74
U9AH07659X	74H76
U9AH08759X	74H87
U9AH10159X	74H101
U9AH10259X	74H102
U9AH10359X	74H103
U9AH10859X	74H108
U9AH18359X	74H183
U9AN00059X	7400
U9AN00159X	7401
U9AN00259X	7402
U9AN00359X	7403
U9AN00459X	7404
U9AN00559X	7405
U9AN00659X	7406
U9AN00759X	7407
U9AN00859X	7408
U9AN00959X	7409
U9AN01059X	7410
U9AN01159X	7411
U9AN01259X	7412
U9AN01359X	7413
U9AN01459X	7414
U9AN01659X	7416
U9AN01759X	7417
U9AN02059X	7420
U9AN02159X	7421
U9AN02559X	7425
U9AN02659X	7426
U9AN02759X	7427
U9AN03059X	7430
U9AN03259X	7432
U9AN03759X	7437
U9AN03859X	7438
U9AN03959X	7439
U9AN04059X	7440
U9AN05059X	7450
U9AN05159X	7451
U9AN05359X	7453
U9AN05459X	7454
U9AN06059X	7460
U9AN07059X	7470
U9AN07259X	7472
U9AN07359X	7473
U9AN07459X	7474
U9AN08059X	7480
U9AN08259X	7482
U9AN08659X	7486
U9AN09059X	7490
U9AN09159X	7491
U9AN09359X	7493A
U9AN09559X	7495
U9AN10759X	74107
U9AN12259X	74122
U9AN13259X	74132
U9AN15259X	74152
U9AN16459X	74164
U9AN17659X	74176
U9AN17759X	74177
U9AN17859X	74178
U9AN18059X	74180
U9AN19659X	74196
U9AN19759X	74197
U9AN993259X	9932
U9AN993359X	9933
U9AS00059X	74S00
U9AS00359X	74S03
U9AS00459X	74S04
U9AS00559X	74S05
U9AS01059X	74S10
U9AS01159X	74S11
U9AS01559X	74S15
U9AS02059X	74S20
U9AS02259X	74S22
U9AS04059X	74S40
U9AS06459X	74S64
U9AS06559X	74S65
U9AS07459X	74S74
U9AS11359X	74S113
U9AS11459X	74S114
U9AS14059X	74S140
U9B744259X	7442
U9B7780394	714
U9B7787354	797
U9BA01559X	7441
U9BA04259X	74182
U9BA04559X	7445
U9BC01959X	4019B
U9BC02859X	4028B
U9BC51259X	4512B
U9BH10659X	74H106
U9BN02359X	7423
U9BN04259X	7442
U9BN04359X	7443
U9BN04459X	7444
U9BN04859X	7448
U9BN07559X	7475
U9BN07659X	7476
U9BN08359X	7483
U9BN08559X	7485
U9BN09459X	7494
U9BN09659X	7496
U9BN046591	7446
U9BN12359X	74123
U9BN14159X	74141
U9BN14559X	74145
U9BN15159X	74151
U9BN15359X	74153
U9BN15559X	74155
U9BN15659X	74156
U9BN16559X	74165
U9BN16659X	74166
U9BN17059X	74170
U9BN17459X	74174
U9BN17559X	74175
U9BN17959X	74179
U9BN19059X	74190
U9BN19159X	74191
U9BN19259X	74192
U9BN19359X	74193
U9BS11259X	74S112
U9BS13359X	74S133
U9BS13459X	74S134
U9BS15359X	74S153
U9BS15759X	74S157
U9BS15859X	74S158
U9BS17459X	74S154
U9BS17559X	74S175
U9BS19459X	74S194
U9BS31659X	74S16
U9C7065354	712
U9D7067354	729
U9D7758354	743
U9J7706354	1114
U9NA01159X	74154
U9NA04159X	74181
U9NN15059X	74150
U9NN19859X	74198
U9NN19959X	74199
U9T7101392	975
U9T7741392	976
U9T7753354	736
U9T7753395	734
U10	191
U51	189
U119	125
U120	125
U149	460
U168	460
U197	133
U201	466
U212	116
U212-25	116
U213	116
U214	116
U222	466
U235	133
U308	452
U309	452
U311	452
U312	452
U361	125
U460A	107
U460B	107
U525	504
U535	229
U535/7825B(Transistor)	229
U535/7825B(Zener)	5070A
U535A	229
U535B	229
U535B/7825B	229
U535C	107
U535M	107
U574	147A
U633	116
U-633	116
U737	705A
U1177	133
U1178	133
U1180	456
U1181	133
U1277	133
U1278	133
U1279	133
U1280	133
U1281	459
U1282	459
U1283	459
U1284	133
U1285	133
U1286	133
U1322	133
U1323	133
U1324	133
U1325	133
U1420	133
U1421	133
U1422	133
U1585E	123A
U1585F	123A
U1585G	123A
U1585H	123A
U1650E	132
U1714	133
U1715	133
U1835E	132
U1837E	312
U1897E	467
U1916	133
U1994E	312
U2047E	132
U2400-03	116
U-2400-03	116
U2848-1	123A
U3012	133
U-45054-1	941
U2091858-11	121
U13033801	116
UA67	722
UA78L	981
UA78L05	977
UA78L05AC	977
UA78L05ACLP	977
UA78L05AWC	977
UA78L05C	977
UA78L05CLP	977
UA78L05S	977
UA78L05WC	977
UA78L06ACLP	988
UA78L06AS	988
UA78L06CLP	988
UA78L06S	988
UA78L08	981
UA78L08AC	981
UA78L08ACLP	981
UA78L08AWC	981
UA78L08C	981
UA78L08CLP	981
UA78L08S	981
UA78L08WC	981
UA78L062WV	988
UA78L6.2AHC	988
UA78L-8.2AWC	981
UA78L62AHC	988
UA78L62AWC	988
UA78L82	981
UA78L82AWC	981
UA78LAWC	981
UA78M05UC	960
UA78M06CKC	962
UA78M06UC	962
UA78M08CKC	964
UA78M08CKD	964
UA78M08UC	964
UA78M12CKC	966
UA78M12CKD	966
UA78M12UC	966
UA78M15CKC	968
UA78M15CKD	968
UA78M15UC	968
UA78M24CKD	972
UA78M24UC	972
UA79M05AUC	961
UA79M06AUC	963
UA79M06CKC	963
UA79M12AUC	967
UA79M12CKC	967
UA79M12CKD	967
UA79M15AUC	969
UA79M15CKC	969
UA79M15CKD	969
UA79M24AUC	971
UA79M24CKC	971
UA79M24CKD	971
uA201AH	1171
uA201H	1171
UA209KM	309K
UA224DM	987
uA301AH	1171
uA301AHC	1171
uA301AT	975
uA301ATC	975
uA307T	976
uA307TC	976
UA309KC	309K
UA324DC	987
UA324PC	987
UA339ADC	834
UA555	955M
uA555TC	955M
uA556PC	978
UA703	703A
UA703C	703A
UA703E	703A
uA703HC	703A
UA705	804
UA706	1114
UA706APC	1114
UA706BPC	1114
uA709A	909D
UA709C(D.I.P.)	909D
UA709C(Metal Can)	909
UA709CA	909D
UA709CJ	909D
UA709CL	909
UA709CN	909D
UA709CT	909
uA709DC	909D
uA709HC	909
UA709HM	909
uA709PC	909D
uA709T	909
uA710A	910D
UA710C(D.I.P.)	910D
UA710C(Metal Can)	910
UA710CA	910D
UA710CJ	910D
UA710CL	910
UA710CN	910D
UA710CT	910
uA710DC	910D
uA710HC	910
uA710PC	910D
uA710T	910
uA711A	911
UA711C(D.I.P.)	911D
UA711C(Metal Can)	911
UA711CA	911D
UA711CJ	911D
UA711CK	911
UA711CL	911
UA711CN	911D
UA711CT	911
uA711DC	911D
uA711HC	911
uA711K	911
uA711PC	911D
UA715(Metal Can)	915
UA716	716
UA720	744
uA720Dc	744
uA720Pc	744
UA723C(D.I.P.)	923D
UA723C(Metal Can)	923
UA723CA	923D
UA723CJ	923D
UA723CL	923
UA723DC	923D
UA723HC	923
UA723PC	923D
UA725(Metal Can)	925
UA729	720
UA732	718
uA732PC	718
UA737E	705A
UA739	725
UA739C	725
UA740CT	940
UA740(Metal Can)	940
UA741	941M
UA741C(D.I.P.)	941D
UA741C(Metal Can)	941
UA741C(Minidip)	941M
UA741CA	941D
UA741CJ	941D
UA741CN	941D
UA741CP	941M
UA741CT	941
UA741CV	941M
UA742	979
UA742PC	979
UA746	707
UA746C	790
UA746(D.I.P.)	790
UA746E	705A
UA746(Metal Can)	707
UA746PC	790
UA747CA	947D
UA747CF	947D
UA747CJ	947D
uA747CK	947
UA747CL	947
UA747CN	947D
UA747DC	947D
uA747K	947
UA747(Metal Can)	947
UA747PC	947D
UA748HC	1171
UA748TC	975
UA748V	975
UA749C(Metal Can)	949
uA753	736
UA753	736
UA753C	734
UA758	743
UA758BA	743
uA758PC	743
UA764PC	790
UA-767	722
UA767	722
UA767P	722
UA767PC	722
UA780	714
UA780C	714
UA780DC	714
uA780PC	714
UA781	715
UA781C	715
UA781DC	715
uA781PC	715
UA787	797
uA787PC	797
UA796DC	973D
uA796HC	973
UA796PC	973D
UA915	5130A
uA1312PC	799
UA1312PC	799
UA1314PC	802
UA1315PC	803
UA1391TC	815
UA1458CTC	788
uA1458TC	778
UA1748G	1171
UA2002	1232
UA2136DC	737
UA2136P	737
UA2136PC	737
UA2901PC	834
UA2902	987
UA3018AHM	904
UA3018H	904
UA3019HC	905
UA3026HC	906
UA3039HC	907
UA3045DC	912
UA3045PC	912
UA3046DC	912
UA3046PC	912
uA3054DC	917
UA3054DC	917
UA3064	780
uA3064HC	780
uA3064PC	783
UA3065	712
uA3065PC	712
UA3066	728
uA3066PC	728
UA3067	729
UA3075	723
uA3075PC	723
UA3086DC	912
UA3086PC	912
uA3089E	788
UA3401PC	992
UA7300	2002
UA7805C	960
UA7805CDA	309K
UA7805KC	309K
UA7805UC	960
UA7806CKC	962
UA7808C	964
UA7808CKC	964
UA7808CU	964
UA7808UC	964
UA7812C	966
UA7812CKC	966
UA7812UC	966
UA7815C	968
UA7815CKC	968
UA7815CU	968
UA7815UC	968
UA7824C	972
UA7824UC	972
UA7905C	961
UA7905UC	961
UA7906CKC	963
UA7906U	963
UA7906UC	963
UA7912CKC	967
UA7912U	967
UA7912UC	967
UA7915CKC	969
UA7915U	969
UA7915UC	969
UA7924CKC	971
UA7924U	971
UA7924UC	971
UAC767PC	722
UBB770339X	703A
UBB7703393X	703A
UBFY11	108
UC20	133
UC100	133
UC105	133
UC110	133
UC115	133
UC120	133
UC125	133
UC150	452
UC150W	452
UC155	132
UC201	132
UC210	132
UC220	133
UC240	456
UC547C	123A
UC588	132
UC701	133
UC703	456
UC704	456
UC705	133
UC707	466
UC714	133
UC734	132
UC734E	132
UC750	133
UC751	133
UC752	133
UC753	133
UC756	133
UC767PC	772
UC805	460
UC1100	159
UC1100A	159
UC2136	133
UC2138	133
UC2139	133
UC2147	133
UC2148	133
UC2149	133
UC2766	463
UC4741C	941
UD5B	156
UDN-6118A	2021
UDN-6128A	2022
UDN-G118A	2021
UDN-G128A	2022
UDZ707	5121A
UDZ708	5122A
UDZ709	5124A
UDZ710	5125A
UDZ712	5127A
UDZ715	5130A
UDZ718	5133A
UDZ720	5135A
UDZ724	5137A
UDZ727	5139A
UDZ730	5141A
UDZ733	5142A
UDZ736	5143A
UDZ760	5149A
UDZ5707	5121A
UDZ5708	5122A
UDZ5709	5124A
UDZ5710	5125A
UDZ5712	5127A
UDZ5715	5130A
UDZ5718	5133A
UDZ5720	5135A
UDZ5724	5137A
UDZ8707	138A
UDZ8708	5072A
UDZ8709	139A
UDZ8710	140A
UDZ8712	142A
UDZ8715	145A
UDZ8718	5077A
UDZ8720	5079A
UDZ8724	5081A
UDZ8727	146A
UF01	116
UF-01	506
UF-1	506
UF-1A	506
UF-1B	506
UF-1C	506
UF-2	506
UF2	506
UF3	125
UF-3	525
UF-SD1	109
UF-SD-1A	506
UFSD1	506
UFSD-1	116
UFSD-1A	116
UFSD1A	506
UFSD-1A(Sony)	506
UFSD-1B	125
UFSD-1C	506
UFSD-1C(Sears)	506
UFSD-18	125
UG1888	177
UGH7812	966
UGJ7109393	309K
UHD151885-1	116
UHIC001	1201
UHIC-001	1201
UHIC003	1202
UHIC-003	1202
UHIC004	1203
UHIC-004	1203
UHIC-004E	1203
UHIC005	1204
UHIC-005	1204
UHIC005A	1204
UHIC-006	1247
UHIC006	1247
UHIC007	1262
UHIC-007	1262
UHIC007	1262
uL914	9914
uL923	9923
ULN-2001A	2011
ULN-2002A	2012
ULN-2003A	2013
ULN-2004A	2014
ULN-2005A	2015
ULN-2011A	2011
ULN-2012A	2012
ULN-2013A	2013
ULN-2014A	2014
ULN-2015A	2015
ULN-2046A	912
ULN-2081	916
ULN2081A	916
ULN-2081A	916
ULN-2082A	2023
ULN-2086A	912
ULN2110A	801
ULN2111	708
ULN2111A	708
ULN2111n	708
ULn2113	709
ULN2113A	709
ULN2113N	709
ULN2114	790
ULN2114A	790
ULN2114K	707
ULN2114N	790
ULN2114W	705A
ULN2120A	718
ULN2120N	718
ULN2121A	719
ULN2121N	719
ULN2122A	720
ULN2122N	720
ULN2124	714
ULN2124A	714
ULN2124N	714
ULN-2125A	731
ULN2125A	731
ULN2125N	731
ULN2126A	721
ULN2126N	721
ULN2127	715
ULN2127A	715
ULN2127N	715
ULN2128	722
ULN2128A	722
ULN2128N	722
ULN2129A	723
ULN2129N	723
ULN2131M	734
ULN2134A	806
ULN2135E	735
ULN-2136A	708
ULN2136A	737
ULN2136N	737
ULN2137A	744
ULN2137N	744
ULN2165	712
ULN-2165A	712
ULN2165A	712
ULN2165N	712
ULN2208M	805
ULN2209M	736
ULN2210A	801
ULN2210N	801
ULN2211B	742
ULN2211P	742
ULN2212A	807
ULN2212B	807
ULN2212P	807
ULN2224	1062
ULN2224A	1062
ULN2224N	1062
ULN2225B	742
ULN2225P	742
ULN2226A	739
ULN2226N	739
ULN2228A	790
ULN2228N	790
ULN2231A	983
ULN2244	743
ULN2244A	743
ULN2244N	743
ULN2261A	818
ULN2262A	797
ULN2262N	797
ULN2264A	783
ULN2264N	783
ULN2266A	728
ULN2266N	728
ULN2267A	729
ULN2268A	982
ULN2269A	791
ULN2269N	791
ULN2274B	732
ULN2274P	804
ULN2275P	804
ULN2275Q	804
ULN2276P	804
ULN2276Q	804
ULN2277P	804
ULN2277Q	804
ULN2278B	804
ULN2278P	804
ULN2278Q	804
ULN2280A	740A
ULN2280B	740A
ULN2280N	740A
ULN2289A	788
ULN2289N	788
ULN-2291M	815
ULN2298A	738
ULN2298N	738
ULN2741D	941
ULN2747A	947D
ULN-2801A	2016
ULN-2802A	2017
ULN-2803A	2018
ULN-2804A	2019
ULN-2805A	2020
ULN-2811A	2016
ULN-2812A	2017
ULN-2813A	2018
ULN-2814A	2019
ULN-2815A	2020
ULN3127N	744
ULN3262A	797
ULN3701Z	1232
ULS-2045A	912
ULS-2045H	912
ULT3730	127
ULT3731	127
ULX2228A	790
ULX2228N	790
ULX2244A	743
ULX2267A	729
ULX2277	804
ULX2298N	738
UMT3202	124
UO5B	156
UO5-B	156
UO5B	156
UO5C	156
UO-5E	156
UO5E	156
UO6C	506
UO513	156
UP32C	1050
UP12217	186
UP12218	186
UP14046	186
UP14047	186
UPA41C*	159(2)
UPB2S00D	74S00
UPB2S10D	74S10
UPB2S20D	74S20
UPB2S112D	74S112
UPB74H00C	74H00
UPB74H01C	74H01
UPB74H04C	74H04
UPB74H10C	74H10
UPB74H20C	74H20
UPB74H30C	74H30
UPB74H40C	74H40
UPB74H51C	74H51
UPB74LS00	74LS00
UPB74LS02	74LS02
UPB74LS03	74LS03
UPB74LS04	74LS04
UPB74LS05	74LS05
UPB74LS08	74LS08
UPB74LS10	74LS10

To Be Replaced	ECG Replacement
UPB74LS11	74LS11
UPB74LS20	74LS20
UPB74LS27	74LS27
UPB74LS30	74LS30
UPB74LS32	74LS32
UPB74LS38	74LS38
UPB74LS42	74LS42
UPB74LS51	74LS51
UPB74LS74	74LS74A
UPB74LS86	74LS86
UPB74LS109	74LS109A
UPB74LS138	74LS138
UPB74LS151	74LS151
UPB74LS153	74LS153
UPB74LS157	74LS157
UPB74LS161	74LS161A
UPB74LS164	74LS164
UPB74LS175	74LS175
UPB74LS193	74LS193
UPB74LS195	74LS195A
UPB74LS253	74LS253
UPB74LS257	74LS257
UPB74LS367	74LS367
UPB120D	9669
UPB121D	9668
UPB123D	9661
UPB124D	9678
UPB125D	9662
uPB201C	7400
UPB201D	7400
uPB202C	7410
UPB202D	7410
uPB203C	7420
UPB203D	7420
uPB204C	7430
UPB204D	7430
uPB205C	7440
UPB205D	7440
uPB206C	7450
UPB206D	7450
uPB207C	7451
UPB207D	7451
UPB208D	7453
UPB209D	7454
uPB210C	7460
UPB210D	7460
uPB211C	7472
UPB211D	7470
UPB212C	7473
UPB212D	7472
uPB213C	7474
UPB214C	7474
UPB214D	7474
uPB215C	7401
UPB215D	7401
UPB216C	74H11
UPB216D	74H11
uPB217C	7475
UPB217D	7475
uPB218C	7441
UPB218D	7441
uPB219C	7490
UPB219D	7490
uPB222C	7492
UPB222D	7492
uPB223C	7493A
UPB223D	7493A
UPB224C	7476
UPB224D	7476
UPB225C	7473
UPB225D	7473
UPB226C	7495
UPB226D	7495
UPB227D	7442
UPB230D	7483
UPB232C	7402
UPB232D	7402
UPB233C	74H21
UPB233D	74H21
UPB234C	7408
UPB234D	7408
UPB235D	7404
UPB236D	7405
UPB237D	7437
UPB238D	7438
UPB2047D	7447
UPB2080D	7480
UPB2084D	7484
UPB2085D	7485
UPB2086D	7486
UPB2091D	7491
UPB2150D	74150
UPB2151D	74151
UPB2154D	74154
UPB2161D	74161
UPB2170D	74170
UPB2180D	74180
UPB2181D	74181
UPB2182D	74182
UPB2192D	74192
UPB2193D	74193
UPB2195D	74195
UPB2198D	74198
UPB7400C	7400
UPB7402C	7402
UPB7404C	7404
UPB7405C	7405
UPB7410C	7410
UPB7413C	7413
UPB7420C	7420
UPB7430C	7430
UPB7437C	7437
UPB7438C	7438
UPB7440C	7440
UPB7442C	7442

To Be Replaced	ECG Replacement
UPB7445C	7445
UPB7447C	7447
UPB7450C	7450
UPB7451C	7451
UPB7453C	7453
UPB7454C	7454
UPB7460C	7460
UPB7473C	7473
UPB7474C	7474
UPB7476C	7476
UPB7480C	7480
UPB7485C	7485
UPB7486C	7486
UPB7491C	7491
UPB74107C	74107
UPB74123C	74123
UPB74141D	74141
UPB74150C	74150
UPB74151C	74151
UPB74153C	74153
UPB74154C	74154
UPB74155C	74155
UPB74156C	74156
UPB74161C	74161
UPB74164C	74164
UPB74170D	74170
UPB74175C	74175
UPB74180C	74180
UPB74181D	74181
UPB74182C	74182
UPB74192C	74192
UPB74193C	74193
UPB74195C	74195
UPB74198C	74198
UPB74198D	74198
UPC-16	1045
UPC16A	1045
UPC17C	1047
UPC17C/D368	1047
UPC20C	1075A
UPC20C1	1075A
UPC20C2	1075A
UPC22C	1078
uPc23c	1046
UPC23C	1046
UPC23c	1046
UPC27C	1124
UPC27CI	1124
uPc29-2	1089*
UPC29C	1089*
UPC-29C2	1089
UPC29C-2	1089*
UPC-29C2	1089*
uPc29c3	1089*
UPC29C3	1089*
UPC29CZ	1089
uPc30c	1049
UPC31A	1048
uPc31c	1048
UPC31C	1048
UPC31C1	1048
UPC32C	1050
UPC41C	1093
uPc46c	1077
uPc47c	1076
UPC48C	1091*
uPc48c-1	1091*
UPC48C1	1091*
UPC48C-1	1091*
UPC49C	1086
uPc50c	1084
UPC55	909
UPC71	910
UPC71A	910
UPC78L05	977
UPC-78L-05AN	977
UPC78L08	981
UPC81C	1075A
UPC143-05	960
UPC143C08	964
UPC151A	941
UPC151C	941M
UPC154	925
UPC154A	925
UPC157A	1171
UPC206	1075A
UPC251A	947
UPC251C	778
UPC255A	909
UPC301AN	975
UPC324C	987
UPC451C	987
UPC544C	1006
UPC-554	1142
UPC-554	720
UPC554	1142
UPC554C	1142
UPC-554C	1142
UPC555	703A
UPC-555A	703A
UPC555A	703A
UPC-555A	703A
UPC555AB	703A
UPC555C	703A
UPC-555C	703A
uPc555H	1092
UPC558	1051
uPc558c	1051
UPC558C	1051
UPC561	1079
uPc561c	1079
UPC561C	1079
uPc562c	1050
UPC562C1	1050
UPC563H	1081A*

To Be Replaced	ECG Replacement
UPC563H1D369	1081A*
UPC563H2	1081A*
uPC563H2	1081A*
UPC-563H2	1081A*
UPC563H2	1081A*
uPc564c	1088
UPC564C	1088
uPc566H	1052
uPC566H	1052
UPC566H	1052
UPC-566H	1052
UPC566H	1052
UPC566H2	1052
UPC566H3	1052
UPC566H-B	1052
UPC566H-L	1052
UPC566H-M	1052
UPC566H-N	1052
UPC570C	1086A
uPc571c	1078
UPC571C	1078
UPC573C	1184
UPC574J	147A
UPC575	1140
UPC575C*	1141
UPC575C2	1140
UPC576H	1185
UPC577A	1082
uPC577H	1082
UPC-577H	1082
UPC577H	1082
UPC577N	1082
UPC580	1196
UPC580C	1196
UPC592A2	1195
UPC592H2	1195
UPC595C	1186
UPC595C2	1187
UPC596	1187
UPC596C	1187
UPC596C2	1187
UPC767PC	722
UPC858C	1198
UPC861C	1254
UPC942H2	1195
UPC1001H	1127
UPC1001H2	1127
UPC1001-H2	1127
UPC1008C	1172
UPC1020H	1160
UPC1025H	1081A*
UPC1026C	1226
UPC1031H	1245
UPC1032H	1170
UPC1155	1194
UPC1155H	1194
UPC1156	1194
UPC1156H	1194
UPC1156H2	1194
UPC1353C	1246
UPC1380C	1196
UPC1458C	778
UPC2002	1232
UPC14305	977
UPC14305H	960
UPC14308	964
UPC14308H	964
UPC14312	966
UPC14312H	966
UPC14315	968
UPC14315H	968
UPD681C	1254
UPD857C	1199
UPD858	1198
UPD858C	1198
UPD861	1254
UPD861C	1254
UPD861CE	1254
UPD861E	1254
UPD4001	4001B
UPD4001C	4001B
UPD4002	4002B
UPD4002C	4002B
UPD4006	4006B
UPD4011	4011B
UPD4011C	4011B
UPD4012	4012B
UPD4012C	4012B
UPD4013	4013B
UPD4013C	4013B
UPD4014	4014B
UPD4014C	4014B
UPD4015	4015B
UPD4015C	4015B
UPD4017	4017B
UPD4017C	4017B
UPD4019	4019B
UPD4019B	4019B
UPD4019BC	4019B
UPD4019C	4019B
UPD4020	4020B
UPD4020C	4020B
UPD4021	4021B
UPD4021C	4021B
UPD4023	4023B
UPD4023C	4023B
UPD4024	4024B
UPD4024B	4024B
UPD4024BC	4024B
UPD4024C	4024B
UPD4025	4025B
UPD4025C	4025B
UPD4027	4027B
UPD4027C	4027B
UPD4028	4028B

To Be Replaced	ECG Replacement
UPD4028C	4028B
UPD4029	4029B
UPD4029C	4029B
UPD4030	4030B
UPD4030C	4030B
UPD4035	4035B
UPD4040	4040B
UPD4040C	4040B
UPD4042	4042B
UPD4042C	4042B
UPD4043	4043B
UPD4044	4044B
UPD4049	4049B
UPD4049C	4049B
UPD4050	4050B
UPD4050C	4050B
UPD4051	4051B
UPD4051B	4051B
UPD4051BC	4051B
UPD4051C	4051B
UPD4052	4052B
UPD4052BC	4052B
UPD4052C	4052B
UPD4053	4053B
UPD4053B	4053B
UPD4053BC	4053B
UPD4063	4063B
UPD4066	4066B
UPD4068	4068B
UPD4068B	4068B
UPD4068BC	4068B
UPD4068C	4068B
UPD4069	4069
UPD4069C	4069
UPD4071	4071B
UPD4071C	4071B
UPD4073	4073B
UPD4075	4075B
UPD4078	4078B
UPD4078B	4078B
UPD4078BC	4078B
UPD4078C	4078B
UPD4081	4081B
UPD4081C	4081B
UPD4093	4082B
UPD4099	4099B
UPD4099B	4099B
UPD4099BC	4099B
UPD4099C	4099B
UPD4510	4510B
UPD4511	4511B
UPD4512	4512B
UPD4512C	4512B
UPD4514	4514B
UPD4515	4515B
UPD4516	4516B
UPD4518	4518B
UPD4518C	4518B
UPD4520	4520B
UPD4520C	4520B
UPD4522	4522B
UPD4522B	4522B
UPD4522BC	4522B
UPD4522C	4522B
UPD4539	4539B
UPD4539C	4539B
UPD4555	4555B
UPD4555C	4555B
UPD4556	4556B
UPD4556C	4556B
UPD5880	1198
UPD40528	4052B
UPI706	108
UPI706A	108
UPI1303	158
UPI1305	158
UPI1307	158
UPI1309	158
UPI1345	158
UPI1347	100
UPI1353	102
UPI2222	123A
UPI4046-46	123A
UPI4047-46	123
UPT214	282
UPT215	282
UPT410	284
UPT411	283
UPT413	283
UPT423	283
UPT430	283
UPT431	283
UPT531	327
UPT611	282
UPT612	282
UPT613	282
UPT614	282
UPT615	282
UPT731	385
UPT732	385
UPT733	385
UPT734	385
UPT735	385
UPT833	385
UPT834	385
UPT835	385
UPT931	327
UPT1131	328
UPT1132	328
UPT1133	328
UPT1134	328
UPT1135	328
UR105	116
UR110	116
UR115	116

To Be Replaced	ECG Replacement
UR120	116
UR123AA	5870
UR123BA	5872
UR123CA	5874
UR123DA	5874
UR123EA	5878
UR123FA	5878
UR123HA	5878
UR123KA	5878
UR123MA	5882
UR123PA	5886
UR123RA	5886
UR123VA	5890
UR125	116
UR205	5800
UR210	5801
UR215	5802
UR220	5802
UR225	5804
US10/1	502
US15/1	502
US15-1	503
US15/1B	502
US15/1b	502
US15/1S	502
US15/3	505
US15/16	503
US20/1A	502
US20-1B	505
US20/1b	502
US20/1B	502
US20/1BS	503
US20/16	504
US25/1	504
US25/1AS	503
US25-1AS	503
US25/1CS	504
US74H00A	74H00
US74H00J	74H00
US74H01A	74H01
US74H01J	74H01
US74H04A	74H04
US74H04J	74H04
US74H05A	74H05
US74H05J	74H05
US74H08A	74H08
US74H08J	74H08
US74H10A	74H10
US74H10J	74H10
US74H11A	74H11
US74H11J	74H11
US74H20A	74H20
US74H20J	74H20
US74H21A	74H21
US74H21J	74H21
US74H22A	74H22
US74H22J	74H22
US74H30A	74H30
US74H30J	74H30
US74H40A	74H40
US74H40J	74H40
US74H50A	74H50
US74H50J	74H50
US74H51A	74H51
US74H51J	74H51
US74H52A	74H52
US74H52J	74H52
US74H53A	74H53
US74H53J	74H53
US74H54A	74H54
US74H54J	74H54
US74H55A	74H55
US74H55J	74H55
US74H60A	74H60
US74H60J	74H60
US74H61A	74H61
US74H61J	74H61
US74H62A	74H62
US74H62J	74H62
US74H71A	74H71
US74H71J	74H71
US74H72A	74H72
US74H72J	74H72
US74H73A	74H73
US74H73J	74H73
US74H74A	74H74
US74H74J	74H74
US74H76A	74H76
US74H78A	74H78
US74H78J	74H78
US123EA	5878
US123GA	5878
US123PA	5886
US123RA	5886
US123VA	5890
US1511b	502
US1555	177
US7400A	7400
US7400J	7400
US7401A	7401
US7401J	7401
US7402A	7402
US7402J	7402
US7403A	7403
US7403J	7403
US7404A	7404
US7404J	7404
US7405A	7405
US7405J	7405
US7408A	7408
US7408J	7408
US7409A	7409
US7409J	7409
US7410A	7410
US7410J	7410

To Be Replaced	ECG Replacement
US7411A	7411
US7411J	7411
US7420A	7420
US7420J	7420
US7426A	7426
US7427A	7427
US7430A	7430
US7430J	7430
US7432A	7432
US7432J	7432
US7438A	7438
US7438J	7438
US7440A	7440
US7440J	7440
US7441A	7441
US7442A	7442
US7443A	7443
US7444A	7444
US7445A	7445
US7446A	7446
US7447A	7447
US7448A	7448
US7450A	7450
US7450J	7450
US7451A	7451
US7451J	7451
US7453A	7453
US7453J	7453
US7454A	7454
US7454J	7454
US7460A	7460
US7460J	7460
US7470A	7470
US7470J	7470
US7472A	7472
US7472J	7472
US7473A	7473
US7473J	7473
US7474A	7474
US7474J	7474
US7475A	7475
US7475J	7475
US7476A	7476
US7480A	7480
US7482A	7482
US7483A	7483
US7486A	7486
US7486J	7486
US7490A	7490
US7490J	7490
US7492A	7492
US7492J	7492
US7493A	7493A
US7493J	7493A
US74107A	74107
US74121A	74121
US74121J	74121
US74145A	74145
US74153A	74153
US74154A	74154
US74180A	74180
US74180J	74180
USD7703394	703A
USFD-1	116
USFD-1A	116
USR1171	5074A
USR1172	5074A
USR1173	5074A
USR1174	5074A
UT11	116
UT12	5802
UT13	5802
UT14	116
UT15	116
UT16	116
UT-16	116
UT17	116
UT18	116
UT21	116
UT22	116
UT23	116
UT24	116
UT25	116
UT26	116
UT27	116
UT111	116
UT-112	116
UT112	116
UT113	116
UT114	116
UT115	116
UT116	116
UT117	116
UT118	125
UT120	125
UT123AA	5940
UT211	5803
UT212	5803
UT213	5804
UT214	5805
UT215	5806
UT221	116
UT222	116
UT223	116
UT224	116
UT225	116
UT226	116
UT227	116
UT228	116
UT229	116
UT231	116
UT232	116
UT233	116
UT234	5802
UT-234	116

To Be Replaced	ECG Replacement
UT235	5804
UT236	5801
UT237	5805
UT238	5806
UT-238	116
UT242	5802
UT244	5804
UT245	5805
UT247	5806
UT249	5801
UT251	5801
UT252	5802
UT254	5804
UT255	5805
UT257	5806
UT258	5808
UT261	5801
UT262	5802
UT264	5804
UT265	5805
UT267	5806
UT268	5808
UT345	125
UT347	5809
UT361	5808
UT362	5808
UT363	5809
UT364	5809
UT2005	5800
UT2010	5801
UT2020	5802
UT2040	5804
UT2060	5806
UT2080	156
UT3005	5800
UT3010	5801
UT3020	5802
UT3040	5804
UT3060	5806
UT3080	5808
UTRA-7RM	121
UZ3.3	5066A
UZ3.6	134A
UZ5.1	135A
UZ5.1B	135A
UZ6.2	137A
UZ6.2B	137A
UZ-6.8B	5071A
UZ7.5	138A
UZ8.2B	5072A
UZ9.1	139A
UZ-9.1B	139A
UZ9.1B	139A
UZ9.1E	139A
UZ9.1F	139A
UZ-9.1F	139A
UZ-12B	142A
UZ13B	142A
UZ15	145A
UZ-15C	145A
UZ91F	139A
UZ110	5156A
UZ111	5157A
UZ112	5158A
UZ113	5159A
UZ114	5160A
UZ115	5161A
UZ116	5162A
UZ117	5163A
UZ118	5164A
UZ119	5165A
UZ120	5166A
UZ210	5156A
UZ211	5157A
UZ212	5158A
UZ213	5159A
UZ214	5160A
UZ215	5161A
UZ216	5162A
UZ217	5163A
UZ218	5164A
UZ219	5165A
UZ220	5166A
UZ310	5156A
UZ311	5157A
UZ312	5158A
UZ313	5159A
UZ314	5160A
UZ315	5161A
UZ316	5162A
UZ317	5163A
UZ318	5164A
UZ319	5165A
UZ320	5166A
UZ706	5120A
UZ707	5121A
UZ708	5122A
UZ709	5124A
UZ710	5125A
UZ712	5127A
UZ713	5128A
UZ714	5129A
UZ715	5130A
UZ716	5131A
UZ718	5133A
UZ720	5135A
UZ722	5136A
UZ724	5137A
UZ727	5139A
UZ730	5141A
UZ733	5142A
UZ736	5143A
UZ740	5144A
UZ750	5147A
UZ756	5148A

@, * — See special notes on inside back cover.

To Be Replaced	ECG Replacement
UZ760	5149A
UZ775	5152A
UZ780	5153A
UZ790	5155A
UZ806	5120A
UZ807	5121A
UZ808	5122A
UZ809	5124A
UZ810	5125A
UZ812	5127A
UZ813	5128A
UZ814	5129A
UZ815	5130A
UZ816	5131A
UZ818	5133A
UZ820	5135A
UZ822	5136A
UZ824	5137A
UZ827	5139A
UZ830	5141A
UZ833	5142A
UZ836	5143A
UZ840	5144A
UZ850	5147A
UZ856	5148A
UZ860	5149A
UZ875	5152A
UZ880	5153A
UZ890	5155A
UZ906	5120A
UZ907	5121A
UZ908	5122A
UZ909	5124A
UZ910	5125A
UZ912	5127A
UZ913	5128A
UZ914	5129A
UZ915	5130A
UZ916	5131A
UZ918	5133A
UZ920	5135A
UZ922	5136A
UZ924	5137A
UZ927	5139A
UZ930	5141A
UZ933	5142A
UZ936	5143A
UZ940	5144A
UZ950	5147A
UZ956	5148A
UZ960	5149A
UZ975	5152A
UZ980	5153A
UZ990	5155A
UZ3355B	5133A
UZ4110	5156A
UZ4111	5157A
UZ4112	5158A
UZ4113	5159A
UZ4115	5161A
UZ4116	5162A
UZ4706	5120A
UZ4707	5121A
UZ4708	5122A
UZ4709	5124A
UZ4710	5125A
UZ4712	5127A
UZ4713	5128A
UZ4715	5130A
UZ4716	5131A
UZ4718	5133A
UZ4720	5135A
UZ4722	5136A
UZ4724	5137A
UZ4727	5139A
UZ4730	5141A
UZ4733	5142A
UZ4736	5143A
UZ4739	5144A
UZ4743	5145A
UZ4747	5146A
UZ4751	5147A
UZ4756	5148A
UZ4762	5150A
UZ4768	5151A
UZ4775	5152A
UZ4782	5153A
UZ4791	5155A
UZ4808	5122A
UZ4812	5127A
UZ5110	5156A
UZ5111	5157A
UZ5112	5158A
UZ5113	5159A
UZ5114	5160A
UZ5115	5161A
UZ5116	5162A
UZ5117	5163A
UZ5118	5164A
UZ5119	5165A
UZ5120	5166A
UZ5210	5156A
UZ5211	5157A
UZ5212	5158A
UZ5213	5159A
UZ5214	5160A
UZ5215	5161A
UZ5216	5162A
UZ5217	5163A
UZ5218	5164A
UZ5219	5165A
UZ5220	5166A
UZ5310	5156A
UZ5311	5157A
UZ5312	5158A

To Be Replaced	ECG Replacement
UZ5313	5159A
UZ5314	5160A
UZ5315	5161A
UZ5316	5162A
UZ5317	5163A
UZ5318	5164A
UZ5319	5165A
UZ5320	5166A
UZ5706	5120A
UZ5707	5121A
UZ5708	5122A
UZ5709	5124A
UZ5710	5125A
UZ5712	5127A
UZ5713	5128A
UZ5714	5129A
UZ5715	5130A
UZ5716	5131A
UZ5718	5133A
UZ5720	5135A
UZ5722	5136A
UZ5724	5137A
UZ5727	5139A
UZ5730	5141A
UZ5733	5142A
UZ5736	5143A
UZ5740	5144A
UZ5750	5147A
UZ5756	5148A
UZ5760	5149A
UZ5775	5152A
UZ5780	5153A
UZ5790	5155A
UZ5806	5120A
UZ5807	5121A
UZ5808	5122A
UZ5809	5124A
UZ5810	5125A
UZ5812	5127A
UZ5813	5128A
UZ5814	5129A
UZ5815	5130A
UZ5816	5131A
UZ5818	5133A
UZ5820	5135A
UZ5822	5136A
UZ5824	5137A
UZ5827	5139A
UZ5830	5141A
UZ5833	5142A
UZ5836	5143A
UZ5840	5144A
UZ5850	5147A
UZ5856	5148A
UZ5860	5149A
UZ5875	5152A
UZ5880	5153A
UZ5890	5155A
UZ5906	5120A
UZ5907	5121A
UZ5908	5122A
UZ5909	5124A
UZ5910	5125A
UZ5912	5127A
UZ5913	5128A
UZ5914	5129A
UZ5915	5130A
UZ5916	5131A
UZ5918	5133A
UZ5920	5135A
UZ5922	5136A
UZ5924	5137A
UZ5927	5139A
UZ5930	5141A
UZ5933	5142A
UZ5936	5143A
UZ5940	5144A
UZ5950	5147A
UZ5956	5148A
UZ5960	5149A
UZ5975	5152A
UZ5980	5153A
UZ5990	5155A
UZ8110	5096A
UZ8111	151A
UZ8112	5097A
UZ8113	5098A
UZ8114	5099A
UZ8115	5100A
UZ8116	5101A
UZ8117	5102A
UZ8118	5103A
UZ8119	5104A
UZ8120	5105A
UZ8210	5096A
UZ8211	151A
UZ8212	5097A
UZ8213	5098A
UZ8214	5099A
UZ8215	5100A
UZ8216	5101A
UZ8217	5102A
UZ8218	5103A
UZ8219	5104A
UZ8220	5105A
UZ8706	5071A
UZ8707	138A
UZ8708	5072A
UZ8709	139A
UZ8710	140A
UZ8712	142A
UZ8713	143A
UZ8714	144A
UZ8715	145A
UZ8716	5075A

To Be Replaced	ECG Replacement
UZ8718	5077A
UZ8720	5079A
UZ8722	5080A
UZ8724	5081A
UZ8727	146A
UZ8730	5084A
UZ8733	147A
UZ8736	5085A
UZ8740	5086A
UZ8750	5089A
UZ8756	5090A
UZ8760	5091A
UZ8775	5093A
UZ8780	150A
UZ8790	5095A
UZ8806	5071A
UZ8807	138A
UZ8808	5072A
UZ8809	139A
UZ8810	140A
UZ8812	142A
UZ8813	143A
UZ8814	139A
UZ8815	145A
UZ8816	5075A
UZ8818	5077A
UZ8820	5079A
UZ8822	5080A
UZ8824	5081A
UZ8827	146A
UZ8830	5084A
UZ8833	147A
UZ8836	5085A
UZ8840	5086A
UZ8850	5089A
UZ8856	5090A
UZ8860	5091A
UZ8875	5093A
UZ8880	150A
UZ8890	5095A
UZ9350	5157A
V01G	125
V03	125
V0-3C	125
V03-C	125
V03C	125
V03E	125
V03-E	125
V03E(Hitachi)	506
V03E(Midland)	506
V03G	116
V03O	125
V05B	156
V0-6	116
V06	116
V06A	116
V0-6A	125
V-06B	116
V0-6B	116
V06B	116
V06BX4	116
V-06C	116
V06-C	116
V06C	116
V0-6C-401	116
V06C(BOOST)	506
V06C(Damper)	506
V06C(Hitachi)	506
V06C(Lafayette)	138A
V06C(Power Rectifier)	116
V06CS	116
V06E	116
V06-E	116
V06G	125
V06-G	125
V09	506
V09A	506
V09B	506
V09C	506
V09-E	506
V09E	506
V09-E(CENT.)	507
V09G	506
V0C236-001	221
V0C236-00i	221
V-1	173BP
V5B7710393	910
V6/2R	126
V6/2RC	102A
V6/2RJ	102A
V6/4R	126
V6/4RC	102A
V6/4RJ	102A
V6/8R	126
V6/8RJ	102A
V6C	116
V6/RC	102A
V10	611
V10/1S	126
V10/1SJ	126
V10/2S	100
V10/2SJ	100
V10/15A	102
V10/15A18	102A
V10/30A	102
V10/30A18	102A
V10/50A	102
V10/50A18	102A
V10A	611
V11J	125
V11L	125
V11N	525
V12	612
V12A	612
V13/11	100

To Be Replaced	ECG Replacement
V15/10DP	121
V15/20DP	121
V15/20R	126
V15/30DP	121
V15C200/80-Vf	116
V17L	116
V30/10DP	121
V30/20DP	121
V30/30DP	104
V33	614
V33A	614
V33EG	614
V33G	614
V50A260-36	109
V51	102A
V58	160
V60/10DP	121
V60/10P	121
V60/20DP	121
V60/20P	121
V60/30DP	121
V60/30P	121
V66	116
V74	109
V75	160
V78	117
V115	109
V117	109
V118	107
V119	123A
V120	160
V120PH	108
V120RH	128
V126	145A
V129	107
V135	109
V139	128
V140	138A
V143	107
V144	124
V145	121
V146	128
V148	117
V150LA10A	524
V150LA20A	524
V150LAX572	524
V151(Benco)	9914
V152	159
V152A	121
V154	128
V159	133
V160	142A
V162	159
V162A	121
V166	128
V167	134A
V169	123A
V171	117
V172	128
V174	138A
V175	146A
V176	184
V177	128
V178	703A
V180	129
V181(Benco)	9989
V182	725
V183	132
V184	703A
V188	135A
V191	156
V205	160
V-210C	109
V210C	116
V220	108
V221	108
V222	108
V270-D1	116
V-270D1	116
V297	123A
V405	108
V409	152
V410	159
V440A	129
V413	6408
V413K	6408
V413L	6407
V413M	6407
V413N	6408
V415	108
VC841A	610
VC2011	5126A
VD1N34A///-1	109
VD6	116
VD10E1LF	116
VD11	109
VD12	109
VD13	109
VD-121C	116
VD1120	601
VD1121	601
VD1122	601
VD-1122	601
VD1122	601
VD-1122	601
VD-1123	177
VD1123	601
VD1124	601
VD-1124	601
VD1127	177
VD1129	601
VD1150L	601
VD1150M	601
VD1210	605
VD1210L	605

To Be Replaced	ECG Replacement
V9446-4	116
V10158	116
V10916-3	109
V-10916-3	109
V11189-1	116
V15920	116
V50260-10	177
V50260-16	109
V50260-36	177
V587710393	910
VA127	614
VA128	614
VA132	611
VA135	611
VA157	611
VA160	614
VA5139	610
VA5139A	610
VAMV-1	116
VAR	177
VAR-1R2	177
VB11	102A
VB-11	116
VB15	525
VB100	116
VB300	116
VB400	116
VB-400	116
VB500	116
VB600	116
VB-600	116
VB600A	116
VBH600	116
VC6E	116
VC10	611
VC10A	611
VC12	612
VC12A	612
VC33	614
VC33A	614
VC80	541
VC210	611
VC210A	611
VC212	612
VC212A	612
VC233	614
VC233A	614
VC309	611
VC309A	611
VC321	613
VC321A	613
VC332	614
VC332A	614
VC408	610
VC408A	610
VC409	611
VC409A	611
VC410	611
VC410A	611
VC421	613
VC421A	613
VC422	613
VC422A	613
VC432	614
VC432A	614
VC433	614
VC433A	614
VC610	611
VC610A	611
VC611	611
VC611A	611
VC612	612
VC612A	612
VC613	612
VC613A	612
VC622	613
VC622A	613
VC623	613
VC623A	613
VC633	614
VC633A	614
VC634	614
VC634A	614
VC822	611
VC822A	611
VC823	612
VC823A	612
VC827	614
VC827A	614
VC841	610
VHERD27ED//-1	146A
VHEWZ-100-1F	140A
VHEWZ-100//1F	140A
VHEWZ-1001E	5096A
VHEWZ-1001F	177
VHEWZ-1001F(10 volts)	140A
VHEWZ-1001F(100 volts)	5096A
VHEWZ-10001F	5096A
VHEXZ-090-1	139A
VHEXZ090-1	139A
VHEXZ-090//-1	5018A
VHF1S2076-1	177
VHS2SF656//1E	5402
VHS2SF1422/1E	230
VHS326	177
VHSS6089///1E	230
VHSSFORIA411E	5402
VHV1S1209-1	177
VJ148	5312
VJ248	5313
VJ448	5314
VJ648	5315
VJ848	5316
VL/8RJ	100
VL18RJ	126

To Be Replaced	ECG Replacement
VD1211	605
VD1212	605
VD1213	605
VD1220	605
VD1221	605
VD-1222	116
VD1222	605
VD1223	605
VD1251L	605
VD1252L	605
VD-S-7-013626-001	519
VE18	5304
VE27	5304
VE28	5304
VE47	5304
VE48	5304
VE67	5305
VE68	5305
VE88	5306
VE79092	9949
VE79093	9944
VE79141	9937
VF-1043	614
VF-SD1A	506
VFA2745C	116
VFA-2745C	116
VFG2745B	104
VFG-274513	104
VFL-2744K	126
VFL2744K	160
VFP-2746C	104
VFP2746C	121
VFP-6537C	121
VFP6537C	121
VFQ2745F	102A
VFQ-2745F	100
VFS5K	126
VFS-2745	102A
VFS2745	158
VFS-2745J	102A
VFS2745J	158
VFSD-1A	119
VFT-2745H	102A
VFU-2746B	121
VFU2746B	121
VFU65326B	121
VFW2745D	160
VFW-27450	126
VFY-2745E	100
VG310	611
VG310A	611
VG322	613
VG322A	613
VG333	614
VG333A	614
VH10	611
VH12	612
VH33	614
VH148	5312
VH247	5313
VH248	5313
VH447	5314
VH448	5314
VH647	5315
VH648	5315
VH848	5316
VH910	611
VH912	612
VH933	614
VH7084	614
VHCBB109G-1	610
VHCBB1096//-1	614
VHD1N34A///-1	109
VHD1N60-1	109
VHD1N60////-1	109
VHD1S953///1F	177
VHD1S1553//-1	177
VHD1S1555//1A	177
VHD1S1555-R-1	177
VHD1S1834//-1	506
VHD1S1885-1	116
VHD1S1885//-1	116
VHD1S2076-1	177
VHD1S2076//-1	177
VHD1S2230//1E	116
VHD1S2473//-1	519
VHD10E1-1	116
VHD10E1////-1	116
VHEHZ6B3///1A	136A
VHERD6R8EE/-1	5071A
VHERD27ED//-1	146A
VHEWZ-100-1F	140A
VHEWZ-100//1F	140A
VHEWZ-1001E	5096A
VHEWZ-1001F	177
VHEWZ-1001F(10 volts)	140A
VHEWZ-1001F(100 volts)	5096A
VHEWZ-10001F	5096A
VHEXZ-090-1	139A
VHEXZ090-1	139A
VHEXZ-090//-1	5018A
VHF1S2076-1	177
VHS2SF656//1E	5402
VHS2SF1422/1E	230
VHS326	177
VHSS6089///1E	230
VHSSFORIA411E	5402
VHV1S1209-1	177
VJ148	5312
VJ248	5313
VJ448	5314
VJ648	5315
VJ848	5316
VL/8RJ	100
VL18RJ	126

To Be Replaced	ECG Replacement
VM-0.09M	113
VM204	610
VM204A	610
VM205	610
VM205A	610
VM210	610
VM210A	610
VM211	610
VM211A	610
VM216	610
VM216A	610
VM217	610
VM217A	610
VM222	610
VM222A	610
VM223	610
VM223A	610
VM228	610
VM228A	610
VM229	610
VM229A	610
VM234	610
VM234A	610
VM235	610
VM235A	610
VM304	611
VM304A	611
VM305	611
VM305A	611
VM310	611
VM310A	611
VM311	611
VM311A	611
VM316	611
VM316A	611
VM317	611
VM317A	611
VM328	611
VM328A	611
VM329	611
VM329A	611
VM334	611
VM334A	611
VM335	611
VM335A	611
VM504	613
VM504A	613
VM505	613
VM505A	613
VM510	613
VM510A	613
VM511	613
VM511A	613
VM516	613
VM516A	613
VM517	613
VM517A	613
VM522	613
VM522A	613
VM523	613
VM523A	613
VM528	613
VM528A	613
VM529	613
VM529A	613
VM534	613
VM534A	613
VM535	613
VM535A	613
VM604	614
VM604A	614
VM605	614
VM605A	614
VM610	614
VM610A	614
VM611	614
VM611A	614
VM616	614
VM616A	614
VM617	614
VM617A	614
VM622	614
VM622A	614
VM623	614
VM623A	614
VM628	614
VM628A	614
VM629	614
VM629A	614
VM634	614
VM634A	614
VM635	614
VM635A	614
VM20233	124
VM-20233	124
VM30203	121
VM-30203	121
VM30209	123A
VM-30209	123A
VM30233	124
VM30234	124
VM-30234	124
VM30241	123A
VM-30241	123A
VM30242	123A
VM-30242	123A
VM30244	102A
VM-30244	102A
VM30245	124
VM-30245	124
VM45332	123A
VM60280	123A&159
VM-PH9D522/1	116
VM-PH11D522/1	116
VM-TC02P11/2	116

To Be Replaced	ECG Replacement
VMPH11D522-1	116
VMT-01	532
VMT-02	531
VMT-03	500A
VMT-03-01	500A
VMT-03-02	500A
VMT-04	521
VMT-05	522
VMT-05-01	522
VMT-05-02	522
VMT-05-03	522
VMT-06	537
VMT-07	533
VMT-08	523
VMT-09	529
VMT-09-01	529
VMT-10	536
VMT-11	534
VMT-12	538
VMT-13	539
VMT-14	539
VMT-15	530
VO1G	115
VO1G(Emerson)	115
VO-3C	125
VO3C	125
VO-3C	125
VO3G	125
VO-5E	116
VO-6A	116
VO6B	116
VO-6C	116
VO6-C	116
VO6C	116
VO6E	116
VO6G	125
VO-9C	506
VO9E	506
VOG	116
VR5.6	136A
VR5.6A	136A
VR5.6B	136A
VR6.2B	137A
VR6.8B	5071A
VR7.5B	138A
VR8.2B	5072A
VR9B	139A
VR9.1	139A
VR9.1A	139A
VR9.1B	139A
VR10	140A
VR10A	140A
VR10B	140A
VR10E	5186A
VR10F	5125A
VR11	141A
VR11A	141A
VR11B	5074A
VR11F	5126A
VR12	142A
VR12A	142A
VR12B	142A
VR12E	5188A
VR12F	5127A
VR13	143A
VR13A	143A
VR13B	143A
VR13F	5128A
VR14	144A
VR-14	145A
VR14A	144A
VR14B	144A
VR15	145A
VR15A	145A
VR15B	145A
VR15E	5191A
VR15F	5130A
VR16B	5075A
VR16F	5131A
VR18B	5077A
VR18E	5194A
VR18F	5133A
VR20B	5079A
VR20F	5135A
VR22B	5080A
VR22E	5197A
VR22F	5136A
VR24B	5081A
VR24F	5137A
VR27	146A
VR27A	146A
VR27B	146A
VR27E	5200A
VR27F	5139A
VR28B	5083A
VR30B	5084A
VR30F	5141A
VR33	147A
VR33A	147A
VR33B	147A
VR36B	5085A
VR39B	5086A
VR43B	5087A
VR47B	5088A
VR51B	5089A
VR56	148A
VR56A	148A
VR56B	5090A
VR62	149A
VR62A	149A
VR62B	149A
VR68B	5092A
VR75B	5093A
VR82	150A

To Be Replaced	ECG Replacement
VR82A	150A
VR82B	150A
VR91B	5095A
VR100B	5096A
VR110	151A
VR110A	151A
VR110B	151A
VR120B	5097A
VR130B	5098A
VR150B	5100A
VR160B	5101A
VR180B	5103A
VR200B	5105A
VRD1S1555-R-1	177
VS-0A70	109
VS-1	116
VS1	116
VS2B561-C/-1	159
VS-2SA71	160
VS-2SA71B	160
VS2SA71B	160
VS-2SA71BS	160
VS2SA71BS	160
VS-2SA103	160
VS2SA103	160
VS2SA128V	127
VS-2SA358	126
VS-2SA378	126
VS2SA378	160
VS-2SA379	126
VS2SA379	160
VS-2SA385	126
VS2SA385	102
VS-2SA385L	160
VS2SA448	127
VS2SA495-0/-1	159
VS2SA495-0/1E	159
VS2SA495-Y/1E	159
VS2SA562-0/1E	290
VS2SA562-Y/1E	290
VS2SA673-B/1E	290
VS2SA673-C/1A	290
VS2SA673-C/1E	290
VS2SA738C-1	185
VS2SA738-C/-1	185
VS2SA740///1E	292
VS2SA844-D/-1	129
VS2SA844-D/-2	129
VS-2SB126	121
VS2SB126	121
VS-2SB126F	127
VS2SB126F	121
VS-2SB126V	127
VS2SB126V	121
VS-2SB128V	127
VS-2SB171	102A
VS2SB171	102
VS-2SB172	102A
VS2SB172	102
VS-2SB172FN	102A
VS-2SB176	102A
VS2SB176	102
VS-2SB178	102A
VS2SB178	102
VS-2SB178A	102A
VS2SB178A	102
VS-2SB324	102A
VS2SB324	123A
VS-2SB448	127
VS2SB561-C/-1	298
VS2SB568///-1	292
VS-2SC58	154
VS-2SC58A	154
VS-2SC58B	154
VS-2SC58C	154
VS-2SC206	108
VS2SC206	123A
VS-2SC208	108
VS2SC208	123A
VS2SC227-V/-1	123A
VS2SC268LB1E	198
VS-2SC288A	108
VS2SC288A	123A
VS-2SC324H	123A
VS2SC324H	123A
VS2SC371-R-1	199
VS2SC372-0/1E	123A
VS2SC372-Y/1E	123A
VS2SC373-//1E	199
VS2SC373G-1	199
VS2SC373-G/-1	199
VS2SC373-G-1	199
VS2SC374-B-1	199
VS2SC383-W/1E	199
VS-2SC385L	160
VS2SC385L	160
VS2SC388A-/1A	233
VS2SC394-0-1	229
VS2SC394-1-1	229
VS2SC394-Y-1	229
VS2SC394Y-1	229
VS2SC394-Y/-1	229
VS-2SC446	161
VS2SC454-B/1E	289
VS2SC454-C/1A	289
VS2SC454-C/1E	289
VS2SC454-C/3A	289
VS-2SC458	123A
VS2SC458	123A
VS-2SC-458	123A
VS2SC458-C/1E	289
VS2SC460B	107
VS2SC460B-1	233
VS2SC460-B/-1	233
VS2SC460-B-1	233

To Be Replaced	ECG Replacement
VS2SC481-1	195A
VS2SC495-5/-1	295
VS2SC495T-1	295
VS2SC495-T/-1	295
VS2SC495-T-1	295
VS-2SC538	123A
VS-2SC563	108
VS-2SC645	108
VS-2SC645A	108
VS2SC645A	123A
VS2SC681A-Y2E	163A
VS-2SC683	161
VS-2SC684	108
VS2SC684	107
VS2SC717///-1	161
VS2SC732-V1F	199
VS2SC733B-1	199
VS2SC733-B/-1	199
VS2SC733-B-1	199
VS2SC735-Y-1	289
VS2SC735Y-1	289
VS-2SC762	108
VS2SC784R-1	229
VS2SC784-R/1E	229
VS2SC784-R1F	229
VS2SC784R1F	229
VS2SC900U-1	199
VS2SC900-U/-1	199
VS2SC900-U-1	199
VS2SC945AK-1	199
VS2SC945AK/-1	199
VS2SC945AP-1	199
VS2SC945AP/-1	199
VS2SC945LK-1	199
VS2SC945LK/-1	199
VS2SC945LP-1	199
VS2SC945LP/-1	199
VS2SC983-0/2E	198
VS2SC1166-0-1	297
VS2SC1166-1-1	297
VS2SC1166-0-1	297
VS2SC1166-Y-1	297
VS2SC1166Y-1	297
VS2SC1172-/1E	238
VS2SC1173-/1E	238
VS2SC1173-Y-3	152
VS2SC1174-/1E	238
VS2SC1213AC1A	289
VS2SC1213-C/1A	289
VS2SC1237-1	236
VS2SC1237-1F	236
VS2SC1237-/1F	235
VS2SC1237-IF	236
VS2SC1335D/1	199
VS2SC1335D/-1	199
VS2SC1447-/1E	198
VS2SC1447LB1E	198
VS2SC1514/-1	198
VS2SC1514//-1	198
VS2SC1514BK-1E	198
VS2SC1514BK1E	198
VS2SC1569K/1E	198
VS2SC1664//-1	274
VS2SC1674L/-1	229
VS2SC1675K/-1	229
VS2SC1675L/-1	229
VS2SC1675M-1	229
VS2SC1675M/-1	229
VS2SC1681G/1E	199
VS2SC1723-1	198
VS2SC1723//-1	198
VS2SC1723S/-1	198
VS2SC1741-1	129
VS2SC1741//-1	129
VS2SC1815Y/-1	123AP
VS2SC1815Y-1	123AP
VS2SC1829-/1E	162
VS2SC1855//-1	108
VS2SC1890A/1E	375
VS2SC1890A/2E	375
VS2SC1890AD-1	375
VS2SC1890D-1	123A
VS2SC1894//1E	238
VS2SC1909-1	235
VS2SC1921//1E	191
VS2SC1942//1E	165
VS2SC1957-1	295
VS2SC1975M-1	229
VS2SC2068LB1E	198
VS2SC2073//1E	375
VS2SC2073/3E	375
VS2SC2073//3E	375
VS2SC2073LB2E	375
VS2SC3068LB1E	198
VS2SC11660-1	297
VS2SD227V-1	123A
VS2SD227-V-1	123A
VS2SD227-V/-1	123A
VS2SD467-C/-1	297
VS2SD467-C/-I	297
VS2SD470SYL2E	291
VS2SD471S-1	129
VS2SD471-S-1	293
VS2SD476-C/-I	196
VS2SD478SYL2E	291
VS2SD478-YL2E	291
VS2SD478YL2E	291
VS2SD604-//1E	162
VS2SD666-C/-1	194
VS2SD2271-1	123A
VS2SK49F-1	132
VS2SK49-F//-1	312
VS2SK49-F-1	312
VS2SK61-Y-1	312
VS2SK61-Y//-1	312

To Be Replaced	ECG Replacement
VS9-0001-911	116
VS9-0002-911	116
VS9-0003-911	125
VS9-0003-913	199
VS9-0004-911	125
VS9-0004-923	234
VS9-0005-911	116
VS9-0005-913	123A
VS9-0006-911	116
VS9-0006-913	123A
VS9-0007-911	116
VS9-0008-911	177
VS9-0008-923	234
VS9-0014-911	177
VS-102	116
VS120	116
VS148	5312
VS202	116
VS247	5313
VS248	5313
VS447	5314
VS448	5314
VS500	5952
VS600	5952
VS647	5315
VS648	5315
VS848	5316
VS2073//3E	196
VS-CS1255H	128
VS-CS1255HF	128
VS-CS1256HG	129
VS-DG1NR	116
VS-FR1	116
VS-FR-1	116
VS-FR1P	116
VS-FR-1P	116
VS-FT-1N	116
VS-PH9D522/1	116
VS-SD-1B	506
VS-SD-1Z	116
VS-SD-82A	112
VS-TC0-2P11/2	116
VS-TC02P11/2	116
VSCS1255H	128
VSCS1256HG	159
VSF2745	100
VSFR1	116
VSFR1P	116
VSFT1N	116
VSG-20024	116
VSPH9D522/1	116
VSSD1B	116
VSSD1Z	116
VSTC02P11/2	116
VVC201	610
VVC201A	610
VVC203	611
VVC203A	611
VVC205	612
VVC205A	612
VVC213	614
VVC213A	614
VVC409	614
VVC409A	614
VVC410	614
VVC410A	614
VVC412	611
VVC412A	611
VVC413	613
VVC413A	613
VVC415	613
VVC415A	613
VVC700	610
VVC700A	610
VVC701	610
VVC701A	610
VVC702	610
VVC702A	610
VVC704	610
VVC704A	610
VVC705	611
VVC705A	611
VVC706	611
VVC706A	611
VVC710	613
VVC710A	613
VVC712	614
VVC712A	614
VVC713	614
VVC713A	614
VVC726	610
VVC726A	610
VVC729	611
VVC729A	611
VVC730	611
VVC730A	611
VVC731	612
VVC731A	612
VVC732	612
VVC732A	612
VVC741	613
VVC741A	613
VVC742	613
VVC742A	613
VVC743	613
VVC743A	613
VVC747	614
VVC747A	614
VVC748	614
VVC748A	614
VVC749	614
VVC749A	614
VVC789	610
VVC789A	610
VVC790	610

To Be Replaced	ECG Replacement
VVC790A	610
VVC791	610
VVC791A	610
VVC792	610
VVC792A	610
VVC795	611
VVC795A	611
VVC796	611
VVC796A	611
VVC797	611
VVC797A	611
VVC798	611
VVC798A	611
VVC799	611
VVC799A	611
VVC810	612
VVC810A	612
VVC811	612
VVC811A	612
VVC822	614
VVC822A	614
VVC823	614
VVC823A	614
VVC824	614
VVC824A	614
VVC825	614
VVC825A	614
VVC847	610
VVC847A	610
VVC848	610
VVC848A	610
VVC849	610
VVC849A	610
VVC850	611
VVC850A	611
VVC851	611
VVC851A	611
VVC852	611
VVC852A	611
VVC862	613
VVC862A	613
VVC863	613
VVC863A	613
VVC864	613
VVC864A	613
VVC869	614
VVC869A	614
VVC870	614
VVC870A	614
VVC871	614
VVC871A	614
VVC910	611
VVC910A	611
VVC911	611
VVC911A	611
VVC924	613
VVC924A	613
VVC925	613
VVC925A	613
VVC932	614
VVC932A	614
VVC933	614
VVC933A	614
VVC934	614
VVC934A	614
VVC1003	610
VVC1003A	610
VVC1004	611
VVC1004A	611
VVC1005	612
VVC1005A	612
VVC1009	613
VVC1009A	613
VVC1011	614
VVC1011A	614
VVC1620	610
VVC1620A	610
VVC1624	611
VVC1624A	611
VVC1626	612
VVC1626A	612
VVC1634	613
VVC1634A	613
VVC1638	614
VVC1638A	614
VX3375	186
VX3733	152
VZ-050	135A
VZ-052	5010A
VZ-054	5011A
VZ-056	5011A
VZ-058	5012A
VZ-061	5012A
VZ-063	5013A
VZ-065	5014A
VZ-067	5014A
VZ-069	5014A
VZ-071	5015A
VZ-073	5015A
VZ-075	5015A
VZ-077	5015A
VZ-079	5016A
VZ-081	5016A
VZ-083	5016A
VZ-085	5017A
VZ-088	5017A
VZ-090	5018A
VZ-092	5018A
VZ-094	5018A
VZ-096	5019A
VZ-098	5019A
VZ33F	5111A
VZ36F	5112A
VZ39F	5113A
VZ43F	5114A

To Be Replaced	ECG Replacement
VZ47F	5115A
VZ51F	5116A
VZ56F	5117A
VZ62F	5119A
VZ68F	5120A
VZ75F	5121A
VZ82F	5122A
VZ91F	5124A
VZ-100	5019A
VZ100F	5125A
VZ-105	5020A
VZ-110	5020A
VZ110F	5126A
VZ-115	141A
VZ-120	5021A
VZ120F	5127A
VZ-125	5022A
VZ-130	5022A
VZ130F	5128A
VZ-135	5023A
VZ-140	5023A
VZ-145	5024A
VZ-150	5024A
VZ150F	5130A
VZ-157	5025A
VZ160F	5131A
VZ-162	5025A
VZ-167	5026A
VZ-172	5026A
VZ-177	5027A
VZ180F	5133A
VZ-182	5027A
VZ-187	5028A
VZ-192	5028A
VZ-197	5029A
VZ200F	5135A
VZ220F	5136A
VZ240F	5137A
VZ270F	5139A
VZ300F	5141A
VZ330F	5142A
W-005	166
W005M	5304
W02M	5304
W03A	116
W03B	116
W03C	116
W04	167
W04M	5304
W06	116
W06A	116
W06B	116
W06C	116
W06M	5305
W08M	5306
W010M	5307
W0-61	137A
w0-61	137A
W1	100
W1A	133
W1E	220
W1P	132
W1R	177
W1R(Diode)	177
W1R(SCR)	5404
W1U	222
W1U-1	222
W1W	5444
W2	101
W3	102A
W3D	5633
W4	103A
W5	104
W6	105
W7	106
W8	108
W9	121
W9MP	121MP
W10	123
W10M	5307
W11	124
W12	160
W13	127
W14	128
W15	129
W16	130
W16MP	130MP
W17	131
W17MP	131MP
W18	152
W19	153
W20	123A
W21	159
W22	160
W23	161
W24	123A
W25	158
W26	157
W27	155
W28	154
W29	107
W55	148A
W111	5304
W2058	5402
W4002	116
WA-26	177
WA6279	289
WC120	116
WC14020	116
WC-14020	116
WC14027	116
WC-14027	116
WC19862	103A
WC19862A	158
WC19863	102A

To Be Replaced	ECG Replacement
WC19864	102A
WC19865	116
WD001	116
WD002	116
WD003	116
WD004	116
WD005	116
WD006	116
WD007	116
WD008	116
WD009	116
WD010	116
WD011	116
WD012	116
WD013	116
WD014	116
WD015	116
WD1	109
WD2	112
WD3	110MP
WD4	177
WD6A5	116
WD10	113
WD11	114
WD12	115
WD20	118
WD21	119
WD22	120
WD90	139A
WE081	5072A
WE4110	752
WED8748-2	909
WEP7400	7400
WEP7474	7474
WF1	133
WF2	132
WG0A-90	177
WG-10AS	177
WG91	139A
WG103	177
WG-599	177
WG599	177
WG713	177
WG-713	177
WG713	177
WG714	177
WG851	519
WG1010	177
WG1010A	177
WG-1010-A	177
WG-1010A	177
WG-1010AS	177
WG1010B	177
WG-1012	177
WG1012	177
WG1014A	177
WG1021	177
WIE	220
WK-5457	105
WK5457(FET)	457
WK-5457(FET)	457
WK5458	105
WK5458(FET)	457
WK-5458(FET)	457
WK5459	105
WL-125	143A
WL-125A	143A
WL-125B	143A
WL-125C	143A
WL-125D	143A
WL-130	143A
WL-130A	143A
WL-130B	143A
WL-130C	143A
WL-130D	143A
WL-140	144A
WL-140A	144A
WL-140B	144A
WL-140C	144A
WL-140D	144A
WL-150	145A
WL-150A	145A
WL-150B	145A
WL-150C	145A
WL-150D	145A
WL-157	5075A
WL-157A	5075A
WL-157B	5075A
WL-157C	5075A
WL-157D	5075A
WL-162	5075A
WL-162A	5075A
WL-162B	5075A
WL-162C	5075A
WL-162D	5075A
WL-167	5075A
WL-167A	5075A
WL-167B	5075A
WL-167C	5075A
WL-167D	5075A
WL-172	5077A
WL-172A	5077A
WL-172B	5077A
WL-172C	5077A
WL-172D	5077A
WL-177	5077A
WL-177A	5077A
WL-177B	5077A
WL-177C	5077A
WL-177D	5077A
WL-182	5077A
WL-182A	5077A

To Be Replaced	ECG Replacement
WL-182B	5077A
WL-182C	5077A
WL-182D	5077A
WL-230	5081A
WL-230A	5081A
WL-230B	5081A
WL-230C	5081A
WL-230D	5081A
WL-240	5081A
WL-240A	5081A
WL-240B	5081A
WL-240C	5081A
WL-240D	5081A
WL-250	5081A
WL-250A	5081A
WL-250B	5081A
WL-250C	5081A
WL-250D	5081A
WL-260	146A
WL-260A	146A
WL-260B	146A
WL-260C	146A
WL-260D	146A
WL-270	146A
WL-270A	146A
WL-270B	146A
WL-270C	146A
WL-270D	146A
WL-290	5084A
WL-290A	5084A
WL-290B	5084A
WL-290C	5084A
WL-290D	5084A
WL-300	5084A
WL-300A	5084A
WL-300B	5084A
WL-300C	5084A
WL-300D	5084A
WL-330	147A
WL-330A	147A
WL-330B	147A
WL-330C	147A
WL-330D	147A
WL-340	147A
WL-340A	147A
WL-340B	147A
WL-340C	147A
WL-340D	147A
WM-050	135A
WM-050A	135A
WM-050B	135A
WM-050C	135A
WM-050D	135A
WM-052	135A
WM-052A	135A
WM-052B	135A
WM-052C	135A
WM-052D	135A
WM-054	136A
WM-054A	136A
WM-054B	136A
WM-054C	136A
WM-054D	136A
WM-056	136A
WM-056A	136A
WM-056B	136A
WM-056C	136A
WM-056D	136A
WM-058	136A
WM-058A	136A
WM-058B	136A
WM-058C	136A
WM-058D	136A
WM-061	137A
WM-061A	137A
WM-061B	137A
WM-061C	137A
WM-061D	137A
WM-063	137A
WM-063A	137A
WM-063B	137A
WM-063C	137A
WM-063D	137A
WM-065	137A
WM-065A	137A
WM-065B	137A
WM-065C	137A
WM-065D	137A
WM-071	138A
WM-071A	138A
WM-071B	138A
WM-071C	138A
WM-071D	138A
WM-073	138A
WM-073A	138A
WM-073B	138A
WM-073C	138A
WM-073D	138A
WM-075	138A
WM-075A	138A
WM-075B	138A
WM-075C	138A
WM-075D	138A
WM-077	138A
WM-077A	138A
WM-077B	138A
WM-077C	138A
WM-077D	138A
WM-079	5072A
WM-079A	5072A
WM-079B	5072A
WM-079C	5072A
WM-079D	5072A
WM-081	5072A
WM-081A	5072A

To Be Replaced	ECG Replacement
WM-081B	5072A
WM-081C	5072A
WM-081D	5072A
WM-083	5072A
WM-083A	5072A
WM-083B	5072A
WM-083C	5072A
WM-083D	5072A
WM-085	5072A
WM-085A	5072A
WM-085B	5072A
WM-085C	5072A
WM-085D	5072A
WM-088	139A
WM-088A	139A
WM-088B	139A
WM-088C	139A
WM-088D	139A
WM-090	139A
WM-090A	139A
WM-090B	139A
WM-090C	139A
WM-090D	139A
WM-092	139A
WM-092A	139A
WM-092B	139A
WM-092C	139A
WM-092D	139A
WM-094A	139A
WM-094B	139A
WM-094C	139A
WM-094D	139A
WM-098	140A
WM-098A	140A
WM-098B	140A
WM-098C	140A
WM-098D	140A
WM-100	140A
WM-100A	140A
WM-100B	140A
WM-100C	140A
WM-100D	140A
WM-110	5074A
WM-110A	5074A
WM-110B	5074A
WM-110C	5074A
WM-110D	5074A
WM-115	141A
WM-115A	141A
WM-115B	141A
WM-115C	141A
WM-115D	141A
WM-120	142A
WM-120A	142A
WM-120B	142A
WM-120C	142A
WM-120D	142A
WM-125	143A
WM-125A	143A
WM-125B	143A
WM-125C	143A
WM-125D	143A
WM-130	143A
WM-130A	143A
WM-130B	143A
WM-130C	143A
WM-130D	143A
WM-140	144A
WM-140A	144A
WM-140B	144A
WM-140C	144A
WM-140D	144A
WM-150	145A
WM-150A	145A
WM-150B	145A
WM-150C	145A
WM-150D	145A
WM-157	5075A
WM-157A	5075A
WM-157B	5075A
WM-157C	5075A
WM-157D	5075A
WM-162	5075A
WM-162A	5075A
WM-162B	5075A
WM-162C	5075A
WM-162D	5075A
WM-167	5075A
WM-167A	5075A
WM-167B	5075A
WM-167C	5075A
WM-167D	5075A
WM-172	5077A
WM-172A	5077A
WM-172B	5077A
WM-172C	5077A
WM-172D	5077A
WM-177	5077A
WM-177A	5077A
WM-177B	5077A
WM-177C	5077A
WM-177D	5077A
WM-182	5077A
WM-182A	5077A
WM-182B	5077A
WM-182C	5077A
WM-182D	5077A
WM-230	5081A
WM-230A	5081A
WM-230B	5081A
WM-230C	5081A
WM-230D	5081A
WM-240	5081A
WM-240A	5081A
WM-240B	5081A

To Be Replaced	ECG Replacement
WM-240C	5081A
WM-240D	5081A
WM-250	5081A
WM-250A	5081A
WM-250B	5081A
WM-250C	5081A
WM-250D	5081A
WM-260	146A
WM-260A	146A
WM-260B	146A
WM-260C	146A
WM-260D	146A
WM-270	146A
WM-270A	146A
WM-270B	146A
WM-270C	146A
WM-270D	146A
WM-290	5084A
WM-290A	5084A
WM-290B	5084A
WM-290C	5084A
WM-290D	5084A
WM-300	5084A
WM-300A	5084A
WM-300B	5084A
WM-300C	5084A
WM-300D	5084A
WM-330	147A
WM-330A	147A
WM-330B	147A
WM-330C	147A
WM-330D	147A
WM-340	147A
WM-340A	147A
WM-340B	147A
WM-340C	147A
WM-340D	147A
WN-050	135A
WN-050A	135A
WN-050B	135A
WN-050C	135A
WN-050D	135A
WN-052	135A
WN-052A	135A
WN-052B	135A
WN-052C	135A
WN-052D	135A
WN-054	136A
WN-054A	136A
WN-054B	136A
WN-054C	136A
WN-054D	136A
WN-056	136A
WN-056A	136A
WN-056B	136A
WN-056C	136A
WN-056D	136A
WN-058	136A
WN-058A	136A
WN-058B	136A
WN-058C	136A
WN-058D	136A
WN-061	137A
WN-061A	137A
WN-061B	137A
WN-061C	137A
WN-061D	137A
WN-063	137A
WN-063A	137A
WN-063B	137A
WN-063C	137A
WN-063D	137A
WN-065	137A
WN-065A	137A
WN-065B	137A
WN-065C	137A
WN-065D	137A
WN-071	138A
WN-071A	138A
WN-071B	138A
WN-071C	138A
WN-071D	138A
WN-073	138A
WN-073A	138A
WN-073B	138A
WN-073C	138A
WN-073D	138A
WN-075	138A
WN-075A	138A
WN-075B	138A
WN-075C	138A
WN-075D	138A
WN-077	138A
WN-077A	138A
WN-077B	138A
WN-077C	138A
WN-077D	138A
WN-079	5072A
WN-079A	5072A
WN-079B	5072A
WN-079C	5072A
WN-079D	5072A
WN-081	5072A
WN-081A	5072A
WN-081B	5072A
WN-081C	5072A
WN-081D	5072A
WN-083	5072A
WN-083A	5072A
WN-083B	5072A
WN-083C	5072A
WN-083D	5072A
WN-085	5072A
WN-085A	5072A
WN-085B	5072A

To Be Replaced	ECG Replacement
WN-085C	5072A
WN-085D	5072A
WN-088	139A
WN-088A	139A
WN-088B	139A
WN-088C	139A
WN-088D	139A
WN-090	139A
WN-090A	139A
WN-090B	139A
WN-090C	139A
WN-090D	139A
WN-092	139A
WN-092A	139A
WN-092B	139A
WN-092C	139A
WN-092D	139A
WN-094	139A
WN-094A	139A
WN-094B	139A
WN-094C	139A
WN-094D	139A
WN-098	140A
WN-098A	140A
WN-098B	140A
WN-098C	140A
WN-098D	140A
WN-100	140A
WN-100A	140A
WN-100B	140A
WN-100C	140A
WN-100D	140A
WN-110	5074A
WN-110A	5074A
WN-110B	5074A
WN-110C	5074A
WN-110D	5074A
WN-115	141A
WN-115A	141A
WN-115B	141A
WN-115C	141A
WN-115D	141A
WN-120	142A
WN-120A	142A
WN-120B	142A
WN-120C	142A
WN-120D	142A
WN-125	143A
WN-125A	143A
WN-125B	143A
WN-125C	143A
WN-125D	143A
WN-130	143A
WN-130A	143A
WN-130B	143A
WN-130C	143A
WN-130D	143A
WN-140	144A
WN-140A	144A
WN-140B	144A
WN-140C	144A
WN-140D	144A
WN-150	145A
WN-150A	145A
WN-150B	145A
WN-150C	145A
WN-150D	145A
WN-157	5075A
WN-157A	5075A
WN-157B	5075A
WN-157C	5075A
WN-157D	5075A
WN-162	5075A
WN-162A	5075A
WN-162B	5075A
WN-162C	5075A
WN-162D	5075A
WN-167	5075A
WN-167A	5075A
WN-167B	5075A
WN-167C	5075A
WN-167D	5075A
WN-177	5077A
WN-177A	5077A
WN-177B	5077A
WN-177C	5077A
WN-177D	5077A
WN-182	5077A
WN-182A	5077A
WN-182B	5077A
WN-182C	5077A
WN-182D	5077A
WN-230	5081A
WN-230A	5081A
WN-230B	5081A
WN-230C	5081A
WN-230D	5081A
WN-240	5081A
WN-240A	5081A
WN-240B	5081A
WN-240C	5081A
WN-240D	5081A
WN-250	5081A
WN-250A	5081A
WN-250B	5081A
WN-250C	5081A
WN-250D	5081A
WN-260	146A
WN-260A	146A
WN-260B	146A
WN-260C	146A
WN-260D	146A
WN-270	146A
WN-270A	146A
WN-270B	146A

To Be Replaced	ECG Replacement
WN-270C	146A
WN-270D	146A
WN-290	5084A
WN-290A	5084A
WN-290B	5084A
WN-290C	5084A
WN-290D	5084A
WN-300	5084A
WN-300A	5084A
WN-300B	5084A
WN-300C	5084A
WN-300D	5084A
WN-330	147A
WN-330A	147A
WN-330B	147A
WN-330C	147A
WN-330D	147A
WN-340	147A
WN-340A	147A
WN-340B	147A
WN-340C	147A
WN-340D	147A
WO-050	135A
WO-050A	135A
WO-050B	135A
WO-050C	135A
WO-050D	135A
WO-052	135A
WO-052A	135A
WO-052B	135A
WO-052C	135A
WO-052D	135A
WO-054	136A
WO-054A	136A
WO-054B	136A
WO-054C	136A
WO-054D	136A
WO-056	136A
WO-056A	136A
WO-056B	136A
WO-056C	136A
WO-056D	136A
WO-058	136A
WO-058A	136A
WO-058B	136A
WO-058C	136A
WO-058D	136A
WO-061	137A
WO-061A	137A
WO-061B	137A
WO-061C	137A
WO-061D	137A
WO-063	137A
WO-063A	137A
WO-063B	137A
WO-063C	137A
WO-063D	137A
WO-065	137A
WO-065A	137A
WO-065B	137A
WO-065C	137A
WO-065D	137A
WO-071	138A
WO-071A	138A
WO-071B	138A
WO-071C	138A
WO-071D	138A
WO-073	138A
WO-073A	138A
WO-073B	138A
WO-073C	138A
WO-073D	138A
WO-075	138A
WO-075A	138A
WO-075B	138A
WO-075C	138A
WO-075D	138A
WO-077	138A
WO-077A	138A
WO-077B	138A
WO-077C	138A
WO-077D	138A
WO-079	5072A
WO-079A	5072A
WO-079B	5072A
WO-079C	5072A
WO-079D	5072A
WO-081	5072A
WO-081A	5072A
WO-081B	5072A
WO-081C	5072A
WO-081D	5072A
WO-083	5072A
WO-083A	5072A
WO-083B	5072A
WO-083C	5072A
WO-083D	5072A
WO-085	5072A
WO-085A	5072A
WO-085B	5072A
WO-085C	5072A
WO-085D	5072A
WO-088	139A
WO-088A	139A
WO-088B	139A
WO-088C	139A
WO-088D	139A
WO-090	139A
WO-090A	139A
WO-090B	139A
WO-090C	139A
WO-090D	139A
WO-092	139A
WO-092A	139A
WO-092B	139A

To Be Replaced	ECG Replacement
WO-092C	139A
WO-092D	139A
WO-094	139A
WO-094A	139A
WO-094B	139A
WO-094C	139A
WO-094D	139A
WO-098	140A
WO-098A	140A
WO-098B	140A
WO-098C	140A
WO-098D	140A
WO3B	116
WO-6A	116
WO6A	125
WO6B	116
WO-61	137A
WO-100A	140A
WO-100B	140A
WO-100C	140A
WO-100D	140A
WO-110	5074A
WO-110A	5074A
WO-110B	5074A
WO110C	5074A
WO-110D	5074A
WO-115	141A
WO-115A	141A
WO-115B	141A
WO-115C	141A
WO115D	141A
WO-120	142A
WO-120A	142A
WO-120B	142A
WO-120C	142A
WO-120D	142A
WO-125	143A
WO-125A	143A
WO-125B	143A
WO-125C	143A
WO-125D	143A
WO130	143A
WO-130A	143A
WO-130B	143A
WO-130C	143A
WO-130D	143A
WO-140	144A
WO-140A	144A
WO-140B	144A
WO-140C	144A
WO-140D	144A
WO-150	145A
WO-150A	145A
WO-150B	145A
WO-150C	145A
WO-150D	145A
WO-157	5075A
WO-157A	5075A
WO-157B	5075A
WO-157C	5075A
WO-157D	5075A
WO-162	5075A
WO-162A	5075A
WO-162B	5075A
WO-162C	5075A
WO-162D	5075A
WO-167	5075A
WO-167A	5075A
WO-167B	5075A
WO-167C	5075A
WO-167D	5075A
WO-172	5077A
WO-172A	5077A
WO-172B	5077A
WO-172C	5077A
WO-172D	5077A
WO-177	5077A
WO-177A	5077A
WO-177B	5077A
WO-177C	5077A
WO-177D	5077A
WO-182	5077A
WO-182A	5077A
WO-182B	5077A
WO-182C	5077A
WO-182D	5077A
WO-230	5081A
WO-230A	5081A
WO-230B	5081A
WO-230C	5081A
WO-230D	5081A
WO-240	5081A
WO-240A	5081A
WO-240B	5081A
WO-240C	5081A
WO-240D	5081A
WO-250	5081A
WO-250A	5081A
WO-250B	5081A
WO-250C	5081A
WO-250D	5081A
WO-260	146A
WO-260A	146A
WO-260B	146A
WO-260C	146A
WO-260D	146A
WO-270	146A
WO-270A	146A
WO-270B	146A
WO-270C	146A
WO-270D	146A
WO-290	5084A
WO-290A	5084A
WO-290B	5084A
WO-290C	5084A

To Be Replaced	ECG Replacement
WO-290D	5084A
WO-300	5084A
WO-300A	5084A
WO-300B	5084A
WO-300C	5084A
WO-300D	5084A
WO-330	147A
WO-330A	147A
WO-330B	147A
WO-330C	147A
WO-330D	147A
WO-340	147A
WO-340A	147A
WO-340B	147A
WO-340C	147A
WO-340D	147A
WP-050	135A
WP-050A	135A
WP-050B	135A
WP-050C	135A
WP-050D	135A
WP-052	135A
WP-052A	135A
WP-052B	135A
WP-052C	135A
WP-052D	135A
WP-054	136A
WP-054A	136A
WP-054B	136A
WP-054C	136A
WP-054D	136A
WP-056	136A
WP-056A	136A
WP-056B	136A
WP-056C	136A
WP-056D	136A
WP-058	136A
WP-058A	136A
WP-058B	136A
WP-058C	136A
WP-058D	136A
WP-061	137A
WP-061A	137A
WP-061B	137A
WP-061C	137A
WP-061D	137A
WP-063	137A
WP-063A	137A
WP-063B	137A
WP-063C	137A
WP-063D	137A
WP-065	137A
WP-065A	137A
WP-065B	137A
WP-065C	137A
WP-065D	137A
WP-071	138A
WP-071A	138A
WP-071B	138A
WP-071C	138A
WP-071D	138A
WP-073	138A
WP-073A	138A
WP-073B	138A
WP-073C	138A
WP-073D	138A
WP-075	138A
WP-075A	138A
WP-075B	138A
WP-075C	138A
WP-075D	138A
WP-077	138A
WP-077A	138A
WP-077B	138A
WP-077C	138A
WP-077D	138A
WP-079	5072A
WP-079A	5072A
WP-079B	5072A
WP-079C	5072A
WP-079D	5072A
WP-081	5072A
WP-081A	5072A
WP-081B	5072A
WP-081C	5072A
WP-081D	5072A
WP-083	5072A
WP-083A	5072A
WP-083B	5072A
WP-083C	5072A
WP-083D	5072A
WP-085	5072A
WP-085A	5072A
WP-085B	5072A
WP-085C	5072A
WP-085D	5072A
WP-088	139A
WP-088A	139A
WP-088B	139A
WP-088C	139A
WP-088D	139A
WP-090	139A
WP-090A	139A
WP-090B	139A
WP-090C	139A
WP-090D	139A
WP-092	139A
WP-092A	139A
WP-092B	139A
WP-092C	139A
WP-092D	139A
WP-094	139A
WP-094A	139A
WP-094B	139A
WP-094C	139A

To Be Replaced	ECG Replacement
WP-094D	139A
WP-098	140A
WP-098A	140A
WP-098B	140A
WP-098C	140A
WP-098D	140A
WP-100	140A
WP-100A	140A
WP-100B	140A
WP-100C	140A
WP-100D	140A
WP-110	5074A
WP-110A	5074A
WP-110B	5074A
WP-110C	5074A
WP-110D	5074A
WP-115	141A
WP-115A	141A
WP-115B	141A
WP-115C	141A
WP-115D	141A
WP-120	142A
WP-120A	142A
WP-120B	142A
WP-120C	142A
WP-120D	142A
WP-125	143A
WP-125A	143A
WP-125B	143A
WP-125C	143A
WP-125D	143A
WP-130	143A
WP-130A	143A
WP-130B	143A
WP-130C	143A
WP-130D	143A
WP-140	144A
WP-140A	144A
WP-140B	144A
WP-140C	144A
WP-140D	144A
WP-150	145A
WP-150A	145A
WP-150B	145A
WP-150C	145A
WP-150D	145A
WP-157	5075A
WP-157A	5075A
WP-157B	5075A
WP-157C	5075A
WP-157D	5075A
WP-162	5075A
WP-162A	5075A
WP-162B	5075A
WP-162C	5075A
WP-162D	5075A
WP-167	5075A
WP-167A	5075A
WP-167B	5075A
WP-167C	5075A
WP-167D	5075A
WP-172	5077A
WP-172A	5077A
WP-172B	5077A
WP-172C	5077A
WP-172D	5077A
WP-177	5077A
WP-177A	5077A
WP-177B	5077A
WP-177C	5077A
WP-177D	5077A
WP-182	5077A
WP-182A	5077A
WP-182B	5077A
WP-182C	5077A
WP-182D	5077A
WP-230	5081A
WP-230A	5081A
WP-230B	5081A
WP-230C	5081A
WP-230D	5081A
WP-240	5081A
WP-240A	5081A
WP-240B	5081A
WP-240C	5081A
WP-240D	5081A
WP-250	5081A
WP-250A	5081A
WP-250B	5081A
WP-250C	5081A
WP-250D	5081A
WP-260	146A
WP-260A	146A
WP-260B	146A
WP-260C	146A
WP-260D	146A
WP-270	146A
WP-270A	146A
WP-270B	146A
WP-270C	146A
WP-270D	146A
WP-290	5084A
WP-290A	5084A
WP-290B	5084A
WP-290C	5084A
WP-290D	5084A
WP-300	5084A
WP-300A	5084A
WP-300B	5084A
WP-300C	5084A
WP-300D	5084A
WP-330	147A
WP-330A	147A
WP-330B	147A
WP-330C	147A

To Be Replaced	ECG Replacement
WP-330D	147A
WP-340	147A
WP-340A	147A
WP-340B	147A
WP-340C	147A
WP-340D	147A
WQ-050	135A
WQ-050A	135A
WQ-050B	135A
WQ-050C	135A
WQ-050D	135A
WQ-052	135A
WQ-052A	135A
WQ-052B	135A
WQ-052C	135A
WQ-052D	135A
WQ-054	136A
WQ-054A	136A
WQ-054B	136A
WQ-054C	136A
WQ-054D	136A
WQ-056	136A
WQ-056A	136A
WQ-056B	136A
WQ-056C	136A
WQ-056D	136A
WQ-058	136A
WQ-058A	136A
WQ-058B	136A
WQ-058C	136A
WQ-058D	136A
WQ-061	137A
WQ-061A	137A
WQ-061B	137A
WQ-061C	137A
WQ-061D	137A
WQ-063	137A
WQ-063A	137A
WQ-063B	137A
WQ-063C	137A
WQ-063D	137A
WQ-065	137A
WQ-065A	137A
WQ-065B	137A
WQ-065C	137A
WQ-065D	137A
WQ-071	138A
WQ-071A	138A
WQ-071B	138A
WQ-071C	138A
WQ-071D	138A
WQ-073	138A
WQ-073A	138A
WQ-073B	138A
WQ-073C	138A
WQ-073D	138A
WQ-075	138A
WQ-075A	138A
WQ-075B	138A
WQ-075C	138A
WQ-075D	138A
WQ-077	138A
WQ-077A	138A
WQ-077B	138A
WQ-077C	138A
WQ-077D	138A
WQ-079	5072A
WQ-079A	5072A
WQ-079B	5072A
WQ-079C	5072A
WQ-079D	5072A
WQ-081	5072A
WQ-081A	5072A
WQ-081B	5072A
WQ-081C	5072A
WQ-081D	5072A
WQ-083	5072A
WQ-083A	5072A
WQ-083B	5072A
WQ-083C	5072A
WQ-083D	5072A
WQ-085	5072A
WQ-085A	5072A
WQ-085B	5072A
WQ-085C	5072A
WQ-085D	5072A
WQ-088	139A
WQ-088A	139A
WQ-088B	139A
WQ-088C	139A
WQ-088D	139A
WQ-090	139A
WQ-090A	139A
WQ-090B	139A
WQ-090C	139A
WQ-090D	139A
WQ-092	139A
WQ-092A	139A
WQ-092B	139A
WQ-092C	139A
WQ-092D	139A
WQ-094	139A
WQ-094A	139A
WQ-094B	139A
WQ-094C	139A
WQ-094D	139A
WQ-098	140A
WQ-098A	140A
WQ-098B	140A
WQ-098C	140A
WQ-098D	140A
WQ-100	140A
WQ-100A	140A
WQ-100B	140A
WQ-100C	140A

To Be Replaced	ECG Replacement
WQ-100D	140A
WQ-110	5074A
WQ-110A	5074A
WQ-110B	5074A
WQ-110C	5074A
WQ-110D	5074A
WQ-115	141A
WQ-115A	141A
WQ-115B	141A
WQ-115C	141A
WQ-115D	141A
WQ-120	142A
WQ-120A	142A
WQ-120B	142A
WQ-120C	142A
WQ-120D	142A
WQ-125	143A
WQ-125A	143A
WQ-125B	143A
WQ-125C	143A
WQ-125D	143A
WQ-130	143A
WQ-130A	143A
WQ-130B	143A
WQ-130C	143A
WQ-130D	143A
WQ-140	144A
WQ-140A	144A
WQ-140B	144A
WQ-140C	144A
WQ-140D	144A
WQ-150	145A
WQ-150A	145A
WQ-150B	145A
WQ-150C	145A
WQ-150D	145A
WQ-157	5075A
WQ-157A	5075A
WQ-157B	5075A
WQ-157C	5075A
WQ-157D	5075A
WQ-162	5075A
WQ-162A	5075A
WQ-162B	5075A
WQ-162C	5075A
WQ-162D	5075A
WQ-167	5075A
WQ-167A	5075A
WQ-167B	5075A
WQ-167C	5075A
WQ-167D	5075A
WQ-172	5077A
WQ-172A	5077A
WQ-172B	5077A
WQ-172C	5077A
WQ-172D	5077A
WQ-177	5077A
WQ-177A	5077A
WQ-177B	5077A
WQ-177C	5077A
WQ-177D	5077A
WQ-182	5077A
WQ-182A	5077A
WQ-182B	5077A
WQ-182C	5077A
WQ-182D	5077A
WQ-230	5081A
WQ-230A	5081A
WQ-230B	5081A
WQ-230C	5081A
WQ-230D	5081A
WQ-240	5081A
WQ-240A	5081A
WQ-240B	5081A
WQ-240C	5081A
WQ-240D	5081A
WQ-250	5081A
WQ-250A	5081A
WQ-250B	5081A
WQ-250C	5081A
WQ-250D	5081A
WQ-260	146A
WQ-260A	146A
WQ-260B	146A
WQ-260C	146A
WQ-260D	146A
WQ-270	146A
WQ-270A	146A
WQ-270B	146A
WQ-270C	146A
WQ-270D	146A
WQ-290	5084A
WQ-290A	5084A
WQ-290B	5084A
WQ-290C	5084A
WQ-290D	5084A
WQ-300	5084A
WQ-300A	5084A
WQ-300B	5084A
WQ-300C	5084A
WQ-300D	5084A
WQ-330	147A
WQ-330A	147A
WQ-330B	147A
WQ-330C	147A
WQ-330D	147A
WQ-340	147A
WQ-340A	147A
WQ-340B	147A
WQ-340C	147A
WQ-340D	147A
WR006	116
WR-006	5800
WR011	166
WR013	116(2)

To Be Replaced	ECG Replacement
WR-013	116
WR030	166
WR-030	5800
WR040	166
WR-040	5800
WR-050	135A
WR-050A	135A
WR-050B	135A
WR-050C	135A
WR-050D	135A
WR-052	135A
WR-052A	135A
WR-052B	135A
WR-052C	135A
WR-052D	135A
WR-054	136A
WR-054A	136A
WR-054B	136A
WR-054C	136A
WR-054D	136A
WR-056	136A
WR-056A	136A
WR-056B	136A
WR-056C	136A
WR-056D	136A
WR-058	136A
WR-058A	136A
WR-058B	136A
WR-058C	136A
WR-058D	136A
WR-061	137A
WR-061A	137A
WR-061B	137A
WR-061C	137A
WR-061D	137A
WR-063	137A
WR-063A	137A
WR-063B	137A
WR-063C	137A
WR-063D	137A
WR-065	137A
WR-065A	137A
WR-065B	137A
WR-065C	137A
WR-065D	137A
WR-071	138A
WR-071A	138A
WR-071B	138A
WR-071C	138A
WR-071D	138A
WR-073	138A
WR-073A	138A
WR-073B	138A
WR-073C	138A
WR-073D	138A
WR-075	138A
WR-075A	138A
WR-075B	138A
WR-075C	138A
WR-075D	138A
WR-077	138A
WR-077A	138A
WR-077B	138A
WR-077C	138A
WR-077D	138A
WR-079	5072A
WR-079A	5072A
WR-079B	5072A
WR-079C	5072A
WR-079D	5072A
WR-081	5072A
WR-081A	5072A
WR-081B	5072A
WR-081C	5072A
WR-081D	5072A
WR-083	5072A
WR-083A	5072A
WR-083B	5072A
WR-083C	5072A
WR-083D	5072A
WR-085	5072A
WR-085A	5072A
WR-085B	5072A
WR-085C	5072A
WR-085D	5072A
WR-088	139A
WR-088A	139A
WR-088B	139A
WR-088C	139A
WR-088D	139A
WR-090	139A
WR-090A	139A
WR-090B	139A
WR-090C	139A
WR-090D	139A
WR-092	139A
WR-092A	139A
WR-092B	139A
WR-092C	139A
WR-092D	139A
WR-094	139A
WR-094A	139A
WR-094B	139A
WR-094C	139A
WR-094D	139A
WR-098	140A
WR-098A	140A
WR-098B	140A
WR-098C	140A
WR-098D	140A
WR1	156
WR2	156
WR3	5809
WR10	5492
WR30	5850

To Be Replaced	ECG Replacement
WR31	5852
WR32	5854
WR33	5858
WR34	5862
WR40	5870
WR41	5872
WR42	5874
WR43	5878
WR44	5882
WR50	5980
WR51	5982
WR52	5986
WR53	5990
WR54	5994
WR60	5980
WR61	5982
WR62	5986
WR63	5990
WR64	5994
WR100	116
WR-100	140A
WR-100A	140A
WR-100B	140A
WR-100C	140A
WR-100D	140A
WR-110	5074A
WR-110A	5074A
WR-110B	5074A
WR-110C	5074A
WR-110D	5074A
WR-115	141A
WR-115A	141A
WR-115B	141A
WR-115C	141A
WR-115D	141A
WR-120	142A
WR-120A	142A
WR-120B	142A
WR-120C	142A
WR-120D	142A
WR-125	143A
WR-125A	143A
WR-125B	143A
WR-125C	143A
WR-125D	143A
WR-130	143A
WR-130A	143A
WR-130B	143A
WR-130C	143A
WR-130D	143A
WR-140	144A
WR-140A	144A
WR-140B	144A
WR-140C	144A
WR-140D	144A
WR-150	145A
WR-150A	145A
WR-150B	145A
WR-150C	145A
WR-150D	145A
WR-157	5075A
WR-157A	5075A
WR-157B	5075A
WR-157C	5075A
WR-157D	5075A
WR-162	5075A
WR-162A	5075A
WR-162B	5075A
WR-162C	5075A
WR-162D	5075A
WR-167	5075A
WR-167A	5075A
WR-167B	5075A
WR-167C	5075A
WR-167D	5075A
WR-172	5077A
WR-172A	5077A
WR-172B	5077A
WR-172C	5077A
WR-172D	5077A
WR-177	5077A
WR-177A	5077A
WR-177B	5077A
WR-177C	5077A
WR-177D	5077A
WR-182	5077A
WR-182A	5077A
WR-182B	5077A
WR-182C	5077A
WR-182D	5077A
WR200	116
WR-200	116
WR-230	5081A
WR-230A	5081A
WR-230B	5081A
WR-230C	5081A
WR-230D	5081A
WR-240	5081A
WR-240A	5081A
WR-240B	5081A
WR-240C	5081A
WR-240D	5081A
WR-250	5081A
WR-250A	5081A
WR-250B	5081A
WR-250C	5081A
WR-250D	5081A
WR-260	146A
WR-260A	146A
WR-260B	146A
WR-260C	146A
WR-260D	146A
WR-270	146A
WR-270A	146A
WR-270B	146A

To Be Replaced	ECG Replacement
WR-270C	146A
WR-270D	146A
WR-290	5084A
WR-290A	5084A
WR-290B	5084A
WR-290C	5084A
WR-290D	5084A
WR300	116
WR-300	5084A
WR-300A	5084A
WR-300B	5084A
WR-300C	5084A
WR-300D	5084A
WR-330	147A
WR-330A	147A
WR-330B	147A
WR-330C	147A
WR-330D	147A
WR-340	147A
WR-340A	147A
WR-340B	147A
WR-340C	147A
WR-340D	147A
WR400	116
WR1131	288
WRE981	116
WRE-981	116
WRR1952	123A
WRR1953	123A
WRR1954	123A
WRR1955	5804
WRR1956	5804
WRT1114	102
WS-050	135A
WS-050A	135A
WS-050B	135A
WS-050C	135A
WS-050D	135A
WS-052	135A
WS-052A	135A
WS-052B	135A
WS-052C	135A
WS-052D	135A
WS-054	136A
WS-054A	136A
WS-054B	136A
WS-054C	136A
WS-054D	136A
WS-056	136A
WS-056A	136A
WS-056B	136A
WS-056C	136A
WS-056D	136A
WS-058	136A
WS-058A	136A
WS-058B	136A
WS-058C	136A
WS-058D	136A
WS-061	137A
WS-061A	137A
WS-061B	137A
WS-061C	137A
WS-061D	137A
WS-063	137A
WS-063A	137A
WS-063B	137A
WS-063C	137A
WS-063D	137A
WS-065	137A
WS-065A	137A
WS-065B	137A
WS-065C	137A
WS-065D	137A
WS-071	138A
WS-071A	138A
WS-071B	138A
WS-071C	138A
WS-071D	138A
WS-073	138A
WS-073A	138A
WS-073B	138A
WS-073C	138A
WS-073D	138A
WS-075	138A
WS-075A	138A
WS-075B	138A
WS-075C	138A
WS-075D	138A
WS-077	138A
WS-077A	138A
WS-077B	138A
WS-077C	138A
WS-077D	138A
WS-079	5072A
WS-079A	5072A
WS-079B	5072A
WS-079C	5072A
WS-079D	5072A
WS-081	5072A
WS-081A	5072A
WS-081B	5072A
WS-081C	5072A
WS-081D	5072A
WS-083	5072A
WS-083A	5072A
WS-083B	5072A
WS-083C	5072A
WS-083D	5072A
WS-085	5072A
WS-085A	5072A
WS-085B	5072A
WS-085C	5072A
WS-085D	5072A
WS-088	139A
WS-088A	139A

To Be Replaced	ECG Replacement
WS-088B	139A
WS-088C	139A
WS-088D	139A
WS-090	139A
WS-090A	139A
WS-090B	139A
WS-090C	139A
WS-090D	139A
WS-092	139A
WS-092A	139A
WS-092C	139A
WS-092D	139A
WS-094	139A
WS-094A	139A
WS-094B	139A
WS-094C	139A
WS-094D	139A
WS-098	140A
WS-098A	140A
WS-098B	140A
WS-098C	140A
WS-098D	140A
WS20-1b	503
WS100	177
WS-100	140A
WS100A	177
WS-100A	140A
WS100B	177
WS-100B	140A
WS100C	177
WS-100C	140A
WS-100D	140A
WS-110	5074A
WS-110A	5074A
WS-110B	5074A
WS-110C	5074A
WS-110D	5074A
WS-115	141A
WS-115A	141A
WS-115B	141A
WS-115C	141A
WS-115D	141A
WS-120	142A
WS-120A	142A
WS-120B	142A
WS-120C	142A
WS-120D	142A
WS-125	143A
WS-125A	143A
WS-125B	143A
WS-125C	143A
WS-125D	143A
WS-130	143A
WS-130A	143A
WS-130B	143A
WS-130C	143A
WS-130D	143A
WS-140	144A
WS-140A	144A
WS-140B	144A
WS-140C	144A
WS-140D	144A
WS-150	145A
WS-150A	145A
WS-150B	145A
WS-150C	145A
WS-150D	145A
WS-157	5075A
WS-157A	5075A
WS-157B	5075A
WS-157C	5075A
WS-157D	5075A
WS-162	5075A
WS-162A	5075A
WS-162B	5075A
WS-162C	5075A
WS-162D	5075A
WS-167	5075A
WS-167A	5075A
WS-167B	5075A
WS-167C	5075A
WS-167D	5075A
WS-172	5077A
WS-172A	5077A
WS-172B	5077A
WS-172C	5077A
WS-172D	5077A
WS-177	5077A
WS-177A	5077A
WS-177B	5077A
WS-177C	5077A
WS-177D	5077A
WS-182	5077A
WS-182A	5077A
WS-182B	5077A
WS-182C	5077A
WS-182D	5077A
WS200	177
WS200A	177
WS200B	177
WS200C	177
WS-230	5081A
WS-230A	5081A
WS-230B	5081A
WS-230C	5081A
WS-230D	5081A
WS-240	5081A
WS-240A	5081A
WS-240B	5081A
WS-240C	5081A
WS-240D	5081A
WS-250	5081A
WS-250A	5081A
WS-250B	5081A
WS-250C	5081A

To Be Replaced	ECG Replacement
WS-250D	5081A
WS-260	146A
WS-260A	146A
WS-260B	146A
WS-260C	146A
WS-260D	146A
WS-270	146A
WS-270A	146A
WS-270B	146A
WS-270C	146A
WS-270D	146A
WS-290	5084A
WS-290A	5084A
WS-290B	5084A
WS-290C	5084A
WS-290D	5084A
WS300	177
WS-300	5084A
WS300A	177
WS-300A	5084A
WS300B	177
WS-300B	5084A
WS300C	177
WS-300C	5084A
WS-300D	5084A
WS-330	147A
WS-330A	147A
WS-330B	147A
WS-330C	147A
WS-330D	147A
WS-340	147A
WS-340A	147A
WS-340B	147A
WS-340C	147A
WS-340D	147A
WS6945-2	9945
WSD002C	177
WT-050	135A
WT-050A	135A
WT-050B	135A
WT-050C	135A
WT-050D	135A
WT-052	135A
WT-052A	135A
WT-052B	135A
WT-052C	135A
WT-052D	135A
WT-054	136A
WT-054A	136A
WT-054B	136A
WT-054C	136A
WT-054D	136A
WT-056	136A
WT-056A	136A
WT-056B	136A
WT-056C	136A
WT-056D	136A
WT-058	136A
WT-058A	136A
WT-058B	136A
WT-058C	136A
WT-058D	136A
WT-061	137A
WT-061A	137A
WT-061B	137A
WT-061C	137A
WT-061D	137A
WT-063	137A
WT-063A	137A
WT-063B	137A
WT-063C	137A
WT-063D	137A
WT-065	137A
WT-065A	137A
WT-065B	137A
WT-065C	137A
WT-065D	137A
WT-071	138A
WT-071A	138A
WT-071B	138A
WT-071C	138A
WT-071D	138A
WT-073	138A
WT-073A	138A
WT-073B	138A
WT-073C	138A
WT-073D	138A
WT-075	138A
WT-075A	138A
WT-075B	138A
WT-075C	138A
WT-075D	138A
WT-077	138A
WT-077A	138A
WT-077B	138A
WT-077C	138A
WT-077D	138A
WT-079	5072A
WT-079A	5072A
WT-079B	5072A
WT-079C	5072A
WT-079D	5072A
WT-081	5072A
WT-081A	5072A
WT-081B	5072A
WT-081C	5072A
WT-081D	5072A
WT-083	5072A
WT-083A	5072A
WT-083B	5072A
WT-083C	5072A
WT-083D	5072A
WT-085	5072A
WT-085A	5072A
WT-085B	5072A

To Be Replaced	ECG Replacement
WT-085C	5072A
WT-085D	5072A
WT-088	139A
WT-088A	139A
WT-088B	139A
WT-088C	139A
WT-088D	139A
WT-090	139A
WT-090A	139A
WT-090B	139A
WT-090C	139A
WT-090D	139A
WT-092	139A
WT-092A	139A
WT-092B	139A
WT-092C	139A
WT-092D	139A
WT-094	139A
WT-094A	139A
WT-094B	139A
WT-094C	139A
WT-094D	139A
WT-098	140A
WT-098A	140A
WT-098B	140A
WT-098C	140A
WT-098D	140A
WT16X7	113
WT16X8	114
WT16X9	114
WT-16X9	114
WT-100	140A
WT-100A	140A
WT-100B	140A
WT-100C	140A
WT-100D	140A
WT-110	5074A
WT-110A	5074A
WT-110B	5074A
WT-110C	5074A
WT-110D	5074A
WT-115	141A
WT-115A	141A
WT-115B	141A
WT-115C	141A
WT-115D	141A
WT-120	142A
WT-120A	142A
WT-120B	142A
WT-120C	142A
WT-120D	142A
WT-125	143A
WT-125A	143A
WT-125B	143A
WT-125C	143A
WT-125D	143A
WT-130	143A
WT-130A	143A
WT-130B	143A
WT-130C	143A
WT-130D	143A
WT-140	144A
WT-140A	144A
WT-140B	144A
WT-140C	144A
WT-140D	144A
WT-150	145A
WT-150A	145A
WT-150B	145A
WT-150C	145A
WT-150D	145A
WT-157	5075A
WT-157A	5075A
WT-157B	5075A
WT-157C	5075A
WT-157D	5075A
WT-162	5075A
WT-162A	5075A
WT-162B	5075A
WT-162C	5075A
WT-162D	5075A
WT-167	5075A
WT-167A	5075A
WT-167B	5075A
WT-167C	5075A
WT-167D	5075A
WT-172	5077A
WT-172A	5077A
WT-172B	5077A
WT-172C	5077A
WT-172D	5077A
WT-177	5077A
WT-177A	5077A
WT-177B	5077A
WT-177C	5077A
WT-177D	5077A
WT-182	5077A
WT-182A	5077A
WT-182B	5077A
WT-182C	5077A
WT-182D	5077A
WT-230	5081A
WT-230A	5081A
WT-230B	5081A
WT-230C	5081A
WT-230D	5081A
WT-240	5081A
WT-240A	5081A
WT-240B	5081A
WT-240C	5081A
WT-240D	5081A
WT-250	5081A
WT-250A	5081A
WT-250B	5081A
WT-250C	5081A

To Be Replaced	ECG Replacement
WT-250D	5081A
WT-260	146A
WT-260A	146A
WT-260B	146A
WT-260C	146A
WT-260D	146A
WT-270	146A
WT-270A	146A
WT-270B	146A
WT-270C	146A
WT-270D	146A
WT-290	5084A
WT-290A	5084A
WT-290B	5084A
WT-290C	5084A
WT-290D	5084A
WT-300	5084A
WT-300A	5084A
WT-300B	5084A
WT-300C	5084A
WT-300D	5084A
WT-330	147A
WT-330A	147A
WT-330B	147A
WT-330C	147A
WT-330D	147A
WT-340	147A
WT-340A	147A
WT-340B	147A
WT-340C	147A
WT-340D	147A
WTV12PWR	121
WTV15MG	102A
WTV15VMG	102A
WTV20MC	160
WTV20MG	102A
WTV20VH6	102A
WTV20VHG	102A
WTV20VMG	102A
WTV25PWR	121
WTV30LVG	176
WTV30VH6	158
WTV30VHG	102A
WTV30VLG	102A
WTV30VMG	102A
WTV40PWR	121
WTV99PWR	121
WTV129PWR	105
WTV199PWR	121
WTV299PWR	105
WTV-BMC	102A
WTV-L6	101
WTVAT6	102A
WTVAT6A	160
WTVB5	160
WTVB5A	102A
WTVB6	100
WTVB6A	102
WTVBA6	160
WTVBA6A	102A
WTVBE6	160
WTVBE6A	102A
WTVBMC	158
WTVL6	103
WTVSA7	101
WTVSK7	101
WTVSQ7	101
WU-050	135A
WU-050A	135A
WU-050B	135A
WU-050C	135A
WU-050D	135A
WU-052	135A
WU-052A	135A
WU-052B	135A
WU-052C	135A
WU-052D	135A
WU-054	136A
WU-054A	136A
WU-054B	136A
WU-054C	136A
WU-054D	136A
WU-056	136A
WU-056A	136A
WU-056B	136A
WU-056C	136A
WU-056D	136A
WU-058	136A
WU-058A	136A
WU-058B	136A
WU-058C	136A
WU-058D	136A
WU-140	144A
WU-140A	144A
WU-140B	144A
WU-140C	144A
WU-140D	144A
WU-150	145A
WU-150A	145A
WU-150B	145A
WU-150C	145A
WU-150D	145A
WU-157	5075A
WU-157A	5075A
WU-157B	5075A
WU-157C	5075A
WU-157D	5075A
WU-162	5075A
WU-162A	5075A
WU-162B	5075A
WU-162C	5075A
WU-162D	5075A
WU-167	5075A
WU-167A	5075A
WU-167B	5075A

To Be Replaced	ECG Replacement
WU-071D	138A
WU-073	138A
WU-073A	138A
WU-073B	138A
WU-073C	138A
WU-073D	138A
WU-075	138A
WU-075A	138A
WU-075B	138A
WU-075C	138A
WU-075D	138A
WU-077	138A
WU-077A	138A
WU-077B	138A
WU-077C	138A
WU-077D	138A
WU-079	5072A
WU-079A	5072A
WU-079B	5072A
WU-079C	5072A
WU-079D	5072A
WU-081	5072A
WU-081A	5072A
WU-081B	5072A
WU-081C	5072A
WU-081D	5072A
WU-083	5072A
WU-083A	5072A
WU-083B	5072A
WU-083C	5072A
WU-083D	5072A
WU-085	5072A
WU-085A	5072A
WU-085B	5072A
WU-085C	5072A
WU-085D	5072A
WU-088	139A
WU-088A	139A
WU-088B	139A
WU-088C	139A
WU-088D	139A
WU-090	139A
WU-090A	139A
WU-090B	139A
WU-090C	139A
WU-090D	139A
WU-092	139A
WU-092A	139A
WU-092B	139A
WU-092C	139A
WU-092D	139A
WU-094	139A
WU-094A	139A
WU-094B	139A
WU-094C	139A
WU-094D	139A
WU-098	140A
WU-098A	140A
WU-098B	140A
WU-098C	140A
WU-098D	140A
WU2N1307	140A
WU-20B	142A
WU-100	140A
WU-100A	140A
WU-100B	140A
WU-100C	140A
WU-100D	140A
WU-110	5074A
WU-110A	5074A
WU-110B	5074A
WU-110C	5074A
WU-110D	5074A
WU-115	141A
WU-115A	141A
WU-115B	141A
WU-115C	141A
WU-115D	141A
WU-120	142A
WU-120A	142A
WU-120C	142A
WU-120D	142A
WU-125	142A
WU-125A	142A
WU-125B	142A
WU-125C	142A
WU-125D	142A
WU-130	143A
WU-130A	143A
WU-130B	143A
WU-130C	143A
WU-130D	143A
WU-140	144A
WU-140A	144A
WU-140B	144A
WU-140C	144A
WU-140D	144A
WU-150	145A
WU-150A	145A
WU-150B	145A
WU-150C	145A
WU-150D	145A
WU-157	5075A
WU-157A	5075A
WU-157B	5075A
WU-157C	5075A
WU-157D	5075A
WU-162	5075A
WU-162A	5075A
WU-162B	5075A
WU-162C	5075A
WU-162D	5075A
WU-167	5075A
WU-167A	5075A
WU-167B	5075A

To Be Replaced	ECG Replacement
WU-167C	5075A
WU-167D	5075A
WU-172	5077A
WU-172A	5077A
WU-172B	5077A
WU-172C	5077A
WU-172D	5077A
WU-177	5077A
WU-177A	5077A
WU-177B	5077A
WU-177C	5077A
WU-177D	5077A
WU-182	5077A
WU-182A	5077A
WU-182B	5077A
WU-182C	5077A
WU-182D	5077A
WU-230	5081A
WU-230A	5081A
WU-230B	5081A
WU-230C	5081A
WU-230D	5081A
WU-240	5081A
WU-240A	5081A
WU-240B	5081A
WU-240C	5081A
WU-240D	5081A
WU-250	5081A
WU-250A	5081A
WU-250B	5081A
WU-250C	5081A
WU-250D	5081A
WU-260	146A
WU-260A	146A
WU-260B	146A
WU-260C	146A
WU-260D	146A
WU-270	146A
WU-270A	146A
WU-270B	146A
WU-270C	146A
WU-270D	146A
WU-290	5084A
WU-290A	5084A
WU-290B	5084A
WU-290C	5084A
WU-290D	5084A
WU-300	5084A
WU-300A	5084A
WU-300B	5084A
WU-300C	5084A
WU-300D	5084A
WU-330	147A
WU-330A	147A
WU-330B	147A
WU-330C	147A
WU-330D	147A
WU-340	147A
WU-340A	147A
WU-340B	147A
WU-340C	147A
WU-340D	147A
WV-050	135A
WV-050A	135A
WV-050B	135A
WV-050C	135A
WV-050D	135A
WV-052	135A
WV-052A	135A
WV-052B	135A
WV-052C	135A
WV-052D	135A
WV-054	136A
WV-054A	136A
WV-054B	136A
WV-054C	136A
WV-054D	136A
WV-056	136A
WV-056A	136A
WV-056B	136A
WV-056C	136A
WV-056D	136A
WV-058	136A
WV-058A	136A
WV-058B	136A
WV-058C	136A
WV-058D	136A
WV-061	137A
WV-061A	137A
WV-061B	137A
WV-061C	137A
WV-061D	137A
WV-063	137A
WV-063A	137A
WV-063B	137A
WV-063C	137A
WV-063D	137A
WV-065	137A
WV-065A	137A
WV-065B	137A
WV-065C	137A
WV-065D	137A
WV-071	138A
WV-071A	138A
WV-071B	138A
WV-071C	138A
WV-071D	138A
WV-073	138A
WV-073A	138A
WV-073B	138A
WV-073C	138A
WV-073D	138A
WV-075	138A
WV-075A	138A
WV-075B	138A
WV-075C	138A

To Be Replaced	ECG Replacement
WV-075D	138A
WV-077	138A
WV-077A	138A
WV-077B	138A
WV-077C	138A
WV-077D	138A
WV-079	5072A
WV-079A	5072A
WV-079B	5072A
WV-079C	5072A
WV-079D	5072A
WV-081	5072A
WV-081A	5072A
WV-081B	5072A
WV-081C	5072A
WV-081D	5072A
WV-083	5072A
WV-083A	5072A
WV-083B	5072A
WV-083C	5072A
WV-083D	5072A
WV-085	5072A
WV-085A	5072A
WV-085B	5072A
WV-085C	5072A
WV-085D	5072A
WV-088	139A
WV-088A	139A
WV-088B	139A
WV-088C	139A
WV-088D	139A
WV-090	139A
WV-090A	139A
WV-090B	139A
WV-090C	139A
WV-090D	139A
WV-092	139A
WV-092A	139A
WV-092B	139A
WV-092C	139A
WV-092D	139A
WV-094	139A
WV-094A	139A
WV-094B	139A
WV-094C	139A
WV-094D	139A
WV-098	140A
WV-098A	140A
WV-098B	140A
WV-098C	140A
WV-098D	140A
WV-100	140A
WV-100A	140A
WV-100B	140A
WV-100C	140A
WV-100D	140A
WV-110	5074A
WV-110A	5074A
WV-110B	5074A
WV-110C	5074A
WV-110D	5074A
WV-115	141A
WV-115A	141A
WV-115B	141A
WV-115C	141A
WV-115D	141A
WV-120	142A
WV-120A	142A
WV-120B	142A
WV-120C	142A
WV-120D	142A
WV-125	143A
WV-125A	143A
WV-125B	143A
WV-125C	143A
WV-125D	143A
WV-130	143A
WV-130A	143A
WV-130B	143A
WV-130C	143A
WV-130D	143A
WV-140	144A
WV-140A	144A
WV-140B	144A
WV-140C	144A
WV-140D	144A
WV-150	146A
WV-150A	146A
WV-150B	146A
WV-150C	146A
WV-150D	146A
WV-157	5075A
WV-157A	5075A
WV-157B	5075A
WV-157C	5075A
WV-157D	5075A
WV-162	5075A
WV-162A	5075A
WV-162B	5075A
WV-162C	5075A
WV-162D	5075A
WV-167	5075A
WV-167A	5075A
WV-167B	5075A
WV-167C	5075A
WV-167D	5075A
WV-170	146A
WV-172	5077A
WV-172A	5077A
WV-172B	5077A
WV-172C	5077A
WV-172D	5077A
WV-177	5077A
WV-177A	5077A
WV-177B	5077A

To Be Replaced	ECG Replacement
WV-177C	5077A
WV-177D	5077A
WV-182	5077A
WV-182A	5077A
WV-182B	5077A
WV-182C	5077A
WV-182D	5077A
WV-230	5081A
WV-230A	5081A
WV-230B	5081A
WV-230C	5081A
WV-230D	5081A
WV-240	5081A
WV-240A	5081A
WV-240B	5081A
WV-240C	5081A
WV-240D	5081A
WV-250	5081A
WV-250A	5081A
WV-250B	5081A
WV-250C	5081A
WV-250D	5081A
WV-260	146A
WV-260A	146A
WV-260B	146A
WV-260C	146A
WV-260D	146A
WV-270	146A
WV-270A	146A
WV-270B	146A
WV-270C	146A
WV-270D	146A
WV-290	5084A
WV-290A	5084A
WV-290B	5084A
WV-290C	5084A
WV-290D	5084A
WV-300	5084A
WV-300A	5084A
WV-300B	5084A
WV-300C	5084A
WV-300D	5084A
WV-330	147A
WV-330A	147A
WV-330B	147A
WV-330C	147A
WV-330D	147A
WV-340	147A
WV-340A	147A
WV-340B	147A
WV-340C	147A
WV-340D	147A
WW-050	135A
WW-050A	135A
WW-050B	135A
WW-050C	135A
WW-050D	135A
WW-052	135A
WW-052A	135A
WW-052B	135A
WW-052C	135A
WW-052D	135A
WW-054	136A
WW-054A	136A
WW-054B	136A
WW-054C	136A
WW-054D	136A
WW-056	136A
WW-056A	136A
WW-056B	136A
WW-056C	136A
WW-056D	136A
WW-058	136A
WW-058A	136A
WW-058B	136A
WW-058C	136A
WW-058D	136A
WW-061	137A
WW-061A	137A
WW-061B	137A
WW-061C	137A
WW-061D	137A
WW-063	137A
WW-063A	137A
WW-063B	137A
WW-063C	137A
WW-063D	137A
WW-065	137A
WW-065A	137A
WW-065B	137A
WW-065C	137A
WW-065D	137A
WW-071	138A
WW-071A	138A
WW-071B	138A
WW-071C	138A
WW-071D	138A
WW-073	138A
WW-073A	138A
WW-073B	138A
WW-073C	138A
WW-073D	138A
WW-075	138A
WW-075A	138A
WW-075B	138A
WW-075C	138A
WW-075D	138A
WW-077	138A
WW-077A	138A
WW-077B	138A
WW-077C	138A
WW-077D	138A
WW-079	5072A
WW-079A	5072A
WW-079B	5072A

To Be Replaced	ECG Replacement
WW-079C	5072A
WW-079D	5072A
WW-081	5072A
WW-081A	5072A
WW-081B	5072A
WW-081C	5072A
WW-081D	5072A
WW-083	5072A
WW-083A	5072A
WW-083B	5072A
WW-083C	5072A
WW-083D	5072A
WW-085	5072A
WW-085A	5072A
WW-085B	5072A
WW-085C	5072A
WW-085D	5072A
WW-088	139A
WW-088A	139A
WW-088B	139A
WW-088C	139A
WW-088D	139A
WW-090	139A
WW-090A	139A
WW-090B	139A
WW-090C	139A
WW-090D	139A
WW-092	139A
WW-092A	139A
WW-092B	139A
WW-092C	139A
WW-092D	139A
WW-094	139A
WW-094A	139A
WW-094B	139A
WW-094C	139A
WW-094D	139A
WW-098	140A
WW-098A	140A
WW-098B	140A
WW-098C	140A
WW-098D	140A
WW-100	140A
WW-100A	140A
WW-100B	140A
WW-100C	140A
WW-100D	140A
WW-110	5074A
WW-110A	5074A
WW-110B	5074A
WW-110C	5074A
WW-110D	5074A
WW-115	142A
WW-115A	142A
WW-115B	142A
WW-115C	142A
WW-115D	142A
WW-120	142A
WW-120A	142A
WW-120B	142A
WW-120C	142A
WW-120D	142A
WW-125	144A
WW-125A	144A
WW-125B	144A
WW-125C	144A
WW-125D	144A
WW-130	144A
WW-130A	144A
WW-130B	144A
WW-130C	144A
WW-130D	144A
WW-140	144A
WW-140A	144A
WW-140B	144A
WW-140C	144A
WW-140D	144A
WW-150	145A
WW-150A	145A
WW-150B	145A
WW-150C	145A
WW-150D	145A
WW-157	5075A
WW-157A	5075A
WW-157B	5075A
WW-157C	5075A
WW-157D	5075A
WW-162	5075A
WW-162A	5075A
WW-162B	5075A
WW-162C	5075A
WW-162D	5075A
WW-167	5075A
WW-167A	5075A
WW-167B	5075A
WW-167C	5075A
WW-167D	5075A
WW-172	5077A
WW-172A	5077A
WW-172B	5077A
WW-172C	5077A
WW-172D	5077A
WW-177	5077A
WW-177A	5077A
WW-177B	5077A
WW-177C	5077A
WW-177D	5077A
WW-182	5077A
WW-182A	5077A
WW-182B	5077A
WW-182C	5077A
WW-182D	5077A
WW-230	5081A
WW-230A	5081A
WW-230B	5081A

To Be Replaced	ECG Replacement
WW-230C	5081A
WW-230D	5081A
WW-240	5081A
WW-240A	5081A
WW-240B	5081A
WW-240C	5081A
WW-240D	5081A
WW-250	5081A
WW-250A	5081A
WW-250B	5081A
WW-250C	5081A
WW-250D	5081A
WW-260	146A
WW-260A	146A
WW-260B	146A
WW-260C	146A
WW-260D	146A
WW-270	146A
WW-270A	146A
WW-270B	146A
WW-270C	146A
WW-270D	146A
WW-290	5084A
WW-290A	5084A
WW-290B	5084A
WW-290C	5084A
WW-290D	5084A
WW-300	5084A
WW-300A	5084A
WW-300B	5084A
WW-300C	5084A
WW-300D	5084A
WW-330	147A
WW-330A	147A
WW-330B	147A
WW-330C	147A
WW-330D	147A
WW-340	147A
WW-340A	147A
WW-340B	147A
WW-340C	147A
WW-340D	147A
WX-050	135A
WX-050A	135A
WX-050B	135A
WX-050C	135A
WX-050D	135A
WX-052	135A
WX-052A	135A
WX-052B	135A
WX-052C	135A
WX-052D	135A
WX-054	136A
WX-054A	136A
WX-054B	136A
WX-054C	136A
WX-054D	136A
WX-056	136A
WX056	136A
WX-056A	136A
WX-056B	136A
WX-056C	136A
WX-056D	136A
WX-058	136A
WX-058A	136A
WX-058B	136A
WX-058C	136A
WX-058D	136A
WX-061	137A
WX-061A	137A
WX-061B	137A
WX-061C	137A
WX-061D	137A
WX-063	137A
WX-063A	137A
WX-063B	137A
WX-063C	137A
WX-063D	137A
WX-065	137A
WX-065A	137A
WX-065B	137A
WX-065C	137A
WX-065D	137A
WX-071	138A
WX-071A	138A
WX-071B	138A
WX-071C	138A
WX-071D	138A
WX-073	138A
WX-073A	138A
WX-073B	138A
WX-073C	138A
WX-073D	138A
WX-075	138A
WX-075A	138A
WX-075B	138A
WX-075C	138A
WX-075D	138A
WX-077	138A
WX-077A	138A
WX-077B	138A
WX-077C	138A
WX-077D	138A
WX-079	5072A
WX-079A	5072A
WX-079B	5072A
WX-079C	5072A
WX-079D	5072A
WX-081	5072A
WX-081A	5072A
WX-081B	5072A
WX-081C	5072A
WX-081D	5072A
WX-083	5072A
WX-083A	5072A

To Be Replaced	ECG Replacement
WX-083B	5072A
WX-083C	5072A
WX-083D	5072A
WX-085	5072A
WX-085A	5072A
WX-085B	5072A
WX-085C	5072A
WX-085D	5072A
WX-088	139A
WX-088A	139A
WX-088B	139A
WX-088C	139A
WX-088D	139A
WX-090	139A
WX-090A	139A
WX-090B	139A
WX-090C	139A
WX-090D	139A
WX-092	139A
WX-092A	139A
WX-092B	139A
WX-092C	139A
WX-092D	139A
WX-094	139A
WX-094A	139A
WX-094B	139A
WX-094C	139A
WX-094D	139A
WX096	140A
WX-098	140A
WX-098A	140A
WX-098B	140A
WX-098C	140A
WX-098D	140A
WX6	109
WX-100	140A
WX-100A	140A
WX-100B	140A
WX-100C	140A
WX-100D	140A
WX-110	141A
WX-110A	141A
WX-110B	141A
WX-110C	141A
WX-110D	141A
WX-115	141A
WX-115A	141A
WX-115B	141A
WX-115C	141A
WX-115D	141A
WX-120	142A
WX-120A	142A
WX-120B	142A
WX-120C	142A
WX-120D	142A
WX-125	143A
WX-125A	143A
WX-125B	143A
WX-125C	143A
WX-125D	143A
WX-130	143A
WX-130A	143A
WX-130B	143A
WX-130C	143A
WX-130D	143A
WX-140	144A
WX-140A	144A
WX-140B	144A
WX-140C	144A
WX-140D	144A
WX-150	145A
WX-150A	145A
WX-150B	145A
WX-150C	145A
WX-150D	145A
WX-157	5075A
WX-157A	5075A
WX-157B	5075A
WX-157C	5075A
WX-157D	5075A
WX-162	5075A
WX-162A	5075A
WX-162B	5075A
WX-162C	5075A
WX-162D	5075A
WX-167	5075A
WX-167A	5075A
WX-167B	5075A
WX-167C	5075A
WX-167D	5075A
WX-172	5077A
WX-172A	5077A
WX-172B	5077A
WX-172C	5077A
WX-172D	5077A
WX-177	5077A
WX-177A	5077A
WX-177B	5077A
WX-177C	5077A
WX-177D	5077A
WX-182	5077A
WX-182A	5077A
WX-182B	5077A
WX-182C	5077A
WX-182D	5077A
WX-230	5081A
WX-230A	5081A
WX-230B	5081A
WX-230C	5081A
WX-230D	5081A
WX-240	5081A
WX-240A	5081A
WX-240B	5081A
WX-240C	5081A
WX-240D	5081A
WX-250	5081A

To Be Replaced	ECG Replacement
WX-250A	5081A
WX-250B	5081A
WX-250C	5081A
WX-250D	5081A
WX-260	146A
WX-260A	146A
WX-260B	146A
WX-260C	146A
WX-260D	146A
WX-270	146A
WX-270A	146A
WX-270B	146A
WX-270C	146A
WX-270D	146A
WX-290	5084A
WX-290A	5084A
WX-290B	5084A
WX-290C	5084A
WX-290D	5084A
WX-300	5084A
WX-300A	5084A
WX-300B	5084A
WX-300C	5084A
WX-300D	5084A
WX-330	147A
WX-330A	147A
WX-330B	147A
WX-330C	147A
WX-330D	147A
WX-340	147A
WX-340A	147A
WX-340B	147A
WX-340C	147A
WX-340D	147A
WY-050	135A
WY-050A	135A
WY-050B	135A
WY-050C	135A
WY-050D	135A
WY-052	135A
WY-052A	135A
WY-052B	135A
WY-052C	135A
WY-052D	135A
WY-054	136A
WY-054A	136A
WY-054B	136A
WY-054C	136A
WY-054D	136A
WY-056	136A
WY-056A	136A
WY-056B	136A
WY-056C	136A
WY-056D	136A
WY-058	136A
WY-058A	136A
WY-058B	136A
WY-058C	136A
WY-058D	136A
WY-061	137A
WY-061A	137A
WY-061B	137A
WY-061C	137A
WY-061D	137A
WY-063	137A
WY-063A	137A
WY-063B	137A
WY-063C	137A
WY-063D	137A
WY-065	137A
WY-065A	137A
WY-065B	137A
WY-065C	137A
WY-065D	137A
WY-071	138A
WY-071A	138A
WY-071B	138A
WY-071C	138A
WY-071D	138A
WY-073	138A
WY-073A	138A
WY-073B	138A
WY-073C	138A
WY-073D	138A
WY-075	138A
WY-075A	138A
WY-075B	138A
WY-075C	138A
WY-075D	138A
WY-077	138A
WY-077A	138A
WY-077B	138A
WY-077C	138A
WY-077D	138A
WY-079	5072A
WY-079A	5072A
WY-079B	5072A
WY-079C	5072A
WY-079D	5072A
WY-081	5072A
WY-081A	5072A
WY-081B	5072A
WY-081C	5072A
WY-081D	5072A
WY-083	5072A
WY-083A	5072A
WY-083B	5072A
WY-083C	5072A
WY-083D	5072A
WY-085	5072A
WY-085A	5072A
WY-085B	5072A
WY-085C	5072A
WY-085D	5072A
WY-088	139A

To Be Replaced	ECG Replacement
WY-088A	139A
WY-088B	139A
WY-088C	139A
WY-088D	139A
WY-090	139A
WY-090A	139A
WY-090B	139A
WY-090C	139A
WY-090D	139A
WY-092	139A
WY-092A	139A
WY-092B	139A
WY-092C	139A
WY-092D	139A
WY-094	139A
WY-094A	139A
WY-094B	139A
WY-094C	139A
WY-094D	139A
WY-098	140A
WY-098A	140A
WY-098B	140A
WY-098C	140A
WY-098D	140A
WY-100	140A
WY-100A	140A
WY-100B	140A
WY-100C	140A
WY-100D	140A
WY-110	5074A
WY-110A	5074A
WY-110B	5074A
WY-110C	5074A
WY-110D	5074A
WY-115	141A
WY-115A	141A
WY-115B	141A
WY-115C	141A
WY-115D	141A
WY-120	142A
WY-120A	142A
WY-120B	142A
WY-120C	142A
WY-120D	142A
WY-125	143A
WY-125A	143A
WY-125B	143A
WY-125C	143A
WY-125D	143A
WY-130	143A
WY-130A	143A
WY-130B	143A
WY-130C	143A
WY-130D	143A
WY-140	144A
WY-140A	144A
WY-140B	144A
WY-140C	144A
WY-140D	144A
WY-150	145A
WY-150A	145A
WY-150B	145A
WY-150C	145A
WY-150D	145A
WY-157	5071A
WY-157A	5071A
WY-157B	5075A
WY-157C	5075A
WY-157D	5075A
WY-162	5075A
WY-162A	5075A
WY-162B	5075A
WY-162C	5075A
WY-162D	5075A
WY-167	5075A
WY-167A	5075A
WY-167B	5075A
WY-167C	5075A
WY-167D	5075A
WY-172	5077A
WY-172A	5077A
WY-172B	5077A
WY-172C	5077A
WY-172D	5077A
WY-177	5077A
WY-177A	5077A
WY-177B	5077A
WY-177C	5077A
WY-177D	5077A
WY-182	5077A
WY-182A	5077A
WY-182B	5077A
WY-182C	5077A
WY-182D	5077A
WY-230	5081A
WY-230A	5081A
WY-230B	5081A
WY-230C	5081A
WY-230D	5081A
WY-240	5081A
WY-240A	5081A
WY-240B	5081A
WY-240C	5081A
WY-250	5081A
WY-250B	5081A
WY-250C	5081A
WY-250D	5081A
WY-260	146A
WY-260A	146A
WY-260B	146A
WY-260C	146A
WY-270	146A
WY-270A	146A
WY-270B	146A
WY-270C	146A

To Be Replaced	ECG Replacement
WY-270D	146A
WY-290	5084A
WY-290A	5084A
WY-290B	5084A
WY-290C	5084A
WY-290D	5084A
WY-300	5084A
WY-300A	5084A
WY-300B	5084A
WY-300C	5084A
WY-300D	5084A
WY-330	147A
WY-330A	147A
WY-330B	147A
WY-330C	147A
WY-330D	147A
WY-340	147A
WY-340A	147A
WY-340B	147A
WY-340C	147A
WY-340D	147A
WZ09	5018A
WZ050	135A
WZ-050A	135A
WZ-052	5010A
WZ052	5010A
WZ-052A	5010A
WZ-054	5011A
WZ-054A	136A
WZ-056	5011A
WZ-056A	136A
WZ-058	136A
WZ058	136A
WZ-058A	136A
WZ060	136A
WZ061	137A
WZ-061	137A
WZ061	137A
WZ-061	137A
WZ-061A	137A
WZ-063	5013A
WZ-063A	137A
WZ-065	5014A
WZ065	137A
WZ-065A	137A
WZ-067	5014A
WZ-069	5014A
WZ069	5071A
WZ071	138A
WZ-071	138A
WZ-071A	138A
WZ-073	5015A
WZ-073A	138A
WZ-075	5015A
WZ075	138A
WZ075A	138A
WZ-077	5015A
WZ-077A	138A
WZ-079	5016A
WZ-079A	5072A
WZ-081	5072A
WZ081	5072A
WZ-081	5072A
WZ081	5072A
WZ-081A	5072A
WZ-083	5016A
WZ083	5072A
WZ-083A	5072A
WZ-085	5017A
WZ085	5073A
WZ-085A	5072A
WZ-088	5017A
WZ-088A	140A
WZ-090	139A
WZ090	139A
WZ090	139A
WZ-090	139A
WZ090A	139A
WZ-092	139A
WZ-092A	139A
WZ-094	139A
WZ094	139A
WZ-094	139A
WZ-096	5019A
WZ096	140A
WZ-098	5019A
WZ-098A	140A
WZ.061	137A
WZ3.6	134A
WZ5	135A
WZ5.6	136A
WZ6.2	137A
WZ7.5	138A
WZ9.1	139A
WZ10	140A
WZ11.5	141A
WZ12	142A
WZ12.8	143A
WZ13B	143A
WZ14	144A
WZ15	145A
WZ27	146A
WZ33	147A
WZ55	148A
WZ62	149A
WZ82	150A
WZ-90	139A
WZ-100	140A
WZ100	140A
WZ-100A	140A
WZ-105	5020A
WZ110	5074A
WZ-110	5074A
WZ-110A	5074A
WZ-115	141A

To Be Replaced	ECG Replacement
WZ-115A	141A
WZ120	142A
WZ-120	142A
WZ-125	5022A
WZ-130	5022A
WZ130	143A
WZ-130	5022A
WZ-135	5023A
WZ-140	5023A
WZ140	144A
WZ-145	5024A
WZ-150	145A
WZ150	145A
WZ-157	5025A
WZ-162	5025A
WZ162	5025A
WZ-167	5026A
WZ-172	5026A
WZ177	5078A
WZ-177	5077A
WZ177	5076A
WZ-182	5027A
WZ-187	5028A
WZ-192	5028A
WZ192	5078A
WZ-197	5029A
WZ-210	5080A
WZ-220	5030A
WZ-230	5031A
WZ230	5031A
WZ-240	5081A
WZ240	5081A
WZ-250	5032A
WZ-260	5033A
WZ270	146A
WZ-270	146A
WZ-280	5034A
WZ-290	5035A
WZ-300	5035A
WZ-310	5035A
WZ310A	140A
WZ-320	5036A
WZ-330	5036A
WZ-340	5036A
WZ-350	5037A
WZ522	135A
WZ523	136A
WZ533	140A
WZ535	142A
WZ537	144A
WZ538	145A
WZ-538	145A
WZ542	5027A
WZ544	5029A
WZ544	5029A
WZ905	135A
WZ916	141A
WZ917	142A
WZ919	144A
WZ920	145A
WZ-920	145A
WZ061	137A
WZ090	139A
X004CE	749
X0020CE	1004
X0043CE	712
X0047CE	1189
X092	139A
X1C1644	102A
X5M6	116
X16	109
X16A545-7	123A
X16A1938	123A
X16E3860	123A
X16E3890	192
X16E3960	123A
X16N1485	123A
X18	109
X29A829	159
X32C5099	128
X32C5111	128
X42	160
X45C-H06	102A
X72A42416	177
X78	100
X-78	102A
X137	105
X194-3005829A	130
X300-1300A	128
X713	184
X735-40C	196
X735-41	123A
X1000	213
X1005	121
X-1018	358
X1018	358
X6584-C	123A
X6661A	726
X19001-A	123A
X19001-B	128
X19001-C	128
X19001-D	199
X-19002	941D
X-19031-A	519
X-23305-3	5804
X-23305-4	5804
X253223	124
X330302	142A
X-439623	912
X908922-001	724
X925940-501B	177
X925940-5018	177
X1022220-1	177
X-2408473	9914
X-2408784	9951

To Be Replaced	ECG Replacement
X7338934	175
X7338935	191
XA101	160
XA102	160
XA103	160
XA104	160
XA111	160
XA112	160
XA121	116
XA122	102A
XA123	160
XA124	160
XA126	160
XA131	160
XA141	160
XA142	160
XA143	160
XA151	158
XA152	158
XA161	160
XA492D	129
XA494	159
XA-495	159
XA495	159
XA-495	159
XA495AC	159
XA495C	159
XA-495C	129
XA495(C)	159
XA495D	129
XA701	101
XA702	101
XA703	101
XA1018	128
XA-1071	123A
XA-1072	159
XA-1078	130
XA-1093	124
XA-1095	128
XA-1139	123A
XA-1140	159
XA-1160	152
XA-1161	130
XA-1164	234
XA1199	197
XAA104	7402
XAA105	7430
XAA106	7440
XAA107	7473
XAA108	7476
XAA109	7490
XAN-351	3054
XAN-354	3059
XAN-361	3052
XAN-362	3065
XAN-364	3056
XAN-381	3055
XAN-384	3060
XAN-3051	3054
XAN-3054	3059
XAN-3061	3052
XAN-3062	3065
XAN-3064	3056
XAN-3081	3055
XAN-3084	3060
XB1	102
XB1A	102A
XB2	102
XB2A	102A
XB2/XB4	103A&158(CP)
XB 2.XB4	103A&158
XB3	102
XB3A	102A
XB3B	102
XB3BN	102A
XB3C	102
XB3C-1	102A
XB4	103
XB4-1	102A
XB-5	121
XB5	104
XB-7	121
XB7	104
XB8	160
XB9	160
XB10	160
XB12	128
XB13	102A
XB14	121
XB102	102A
XB103	102A
XB104	102A
XB112	102A
XB113	102A
XB114	102A
XB152	145A
XB401	186
XB404	152
XB408	152
XB413	320
XB476	152
XC-049	135A
XC70	5071A
XC101	102A
XC121	102A
XC131	102A
XC141	121
XC142	121
XC155	104
XC156	104
XC171	102A
XC209	3007
XC-309-12	3008
XC371	107
XC372	123A

To Be Replaced	ECG Replacement
XC373	123A
XC374	123A
XC723	130
XC1312	799
XC-1312A	799
XC1312A	799
XC1312P	799
XD2A	110
XD-258i-42	5635
XD-2581-42	5635
XEJ040017	123A
XF-148217	102A
XG1	160
XG2	160
XG3	160
XG5	160
XG8	102A
XG10	160
XG11	160
XG12	160
XG24	160
XG28	103A
XG29	103A
XG30	123A
XG32	158
XG33	103A
XHPF1299	1232
XI-548	130
XI-549	175
XJ13	102
XJ13-1	102A
XJ71	160
XJ72	160
XJ73	160
XN12A	104
XN12B	104
XN12C	104
XN12E	104
XN12F	104
XN-400-318-P1	123A
XN-400-319-P2	159
XNC101	103
XP-258i-82	5635
XP-2581-82	5635
XPS30800	124
XR556V	978
XR742	979
XR1310N	801
XR2001CP	2011
XR2002CP	2012
XR2003CP	2013
XR2201CP	2011
XR2202CP	2012
XR2203CP	2013
XR2204CP	2014
XR6118CP	2021
XS1	108
XS2	108
XS3	108
XS4	108
XS6	108
XS9.1B	139A
XS10	116
XS-10	116
XS14	108
XS15	108
XS16	116
XS16A	116
XS17	116
XS17A	116
XS18	116
XS19	159
XS21	123A
XS22	123A
XS22(Rect.)	116
XS23	116
XS23A	116
XS26	103A
XS30	128
XS31	116
XS-31	116
XS36	161
XS37	161
XS38	161
XS39	161
XS40	107
XS40A	116
XS101	158
XS104	158
XS121	158
XT1A	191
XT1B	191
XT15X3	108
XT100	158
XT200	158
XT300	126
XT400	126
XT515	190
XT516	190
XT517	190
XT518	190
XT519	190
XT520	190
XT-548A	130
XT-549A	175
XU604	116
XV604	125
XZ-049	135A
XZ051	135A
XZ-051	135A
XZ-051(TRANSISTOR)	159A
XZ-051(ZENER)	135A
XZ055	136A
XZ057	136A
XZ058	5070A

To Be Replaced	ECG Replacement
XZ062	137A
XZ064	5072A
XZ-070	5071A
XZ070	5071A
XZ-070	5071A
XZ-071	138A
XZ-072	138A
XZ076	138A
XZ-076	138A
XZ076	138A
XZ-082	5072A
XZ084	5072A
XZ-084	5016A
XZ086	139A
XZ-086	139A
XZ-087	5073A
XZ090	139A
XZ-090	5018A
XZ-092	139A
XZ092	139A
XZ094	139A
XZ-096	140A
XZ098	140A
XZ-100	140A
XZ100	140A
XZ102	140A
XZ-102	140A
XZ-122	142A
XZ-150	145A
XZ-152	145A
XZ152	145A
XZ070	5071A
Y100	114
Y363	102A
Y410	121
Y633	158
Y49001-21	123A
Y56001-21	519
Y56001-86	123A
Y56601-08	123A
Y56601-44	234
Y56601-45	123A
Y56601-46	129
Y56601-47	128
Y56601-48	234
Y56601-49	123A
Y56601-50	159
Y56601-51	123A
Y56601-63	159
Y56601-73	123A
Y56601-74	159
Y56601-75	123A
Y56601-76	129
Y56601-79	159
Y56601-80	123A
Y56601-82	159
Y56601-84	159
Y56601-86-AD	123A
Y56601-86-AH(Green)	123A
Y56601-86-AH(Orange)	123A
Y56601-86AH(Yellow)	123A
Y56601-93	123A
YAAAM003	1006
YAAD001	109
YAAD001(Zener)	5072A
YAAD004	116
YAAD007	116
YAAD009	109
YAAD010	177
YAAD017	5073A
YAAD018	177
YAAD019	116
YAAD020	116
YAAD021	5072A
YAAD022	116
YAAM003	1006
YAAN2SC1096	186
YAAN2SC1096K	186
YAAN2SC1096L	186
YAAN2SC1096M	186
YAAN2SC1096N	186
YAAN2SD141	175
YAANL2SC1096	186
YAANL2SC1096K	186A
YAANL2SC1096KLMN	186A
YAANL2SC1096L	186A
YAANL2SC1096M	186A
YAANZ	186
YAANZ2S1096	186
YAANZ2SC1096	186
YAANZ2SC1096-BLUE	186
YAANZ2SC1096-GREEN	186
YAANZ2SC1096K	186
YAANZ2SC1096L	186
YAANZ2SC1096M	186
YAANZ2SC1096-RED	186
YAANZSC1096	184
YBAD009	116
YC02P11/2	156
YD1121	177
YEAD010	5072A
YEAD014	5072A
YEAD015	139A
YEAD024	5072A
YEAD025	139A
YEAD029	614
YEAD030	116
YEAD032	110
YEAD1N60P	109
YEAD1SV53	614
YEAD1SY53	614
YEADAW01-06	137A
YEADUPC577H	1082
YEAM004	1098
YEAM53274P	7474

To Be Replaced	ECG Replacement
YEAMHD7474P	7474
YEAMJM78L05	977
YEAMLM2900N	992
YEAMM5152L	1170
YEAMNJM78L05	977
YEAMNJM58105	977
YEAMNM78L05	977
YEAMUPC5	1082
YEAMUPC577H	1082
YEAN2SC941	123A
YEAN3SK39	222
YEAN3SK39-0	222
YEAN3SK39Q	221
YEAN3SK39-Q	221
YEAN3SK39Q	222
YEAUPC577H	1082
YGS-V47-7-51	113
YOD4	117
YR011	116
YR-011	116
YSG-V47-1-3	116
YSG-V47-7-51-1	116
YSG-V47-7-51-2	116
YSG-V81-2-3	178MP
YSG-V139-2-2	109
YSG-V139-22	109
YV1	102A
YV1A	102A
YV2	102A
YZ037	5067A
YZ-037	134A
YZ037-10	134A
YZ-047	5069A
YZ047A	135A
YZ058	136A
YZ060	5071A
YZ063	137A
YZ080	5072A
YZ284	5084A
YZ-284	5083A
Z01-13	143A
Z0-12	142A
Z0-12A	142A
Z0-12B	142A
Z0-27	146A
Z0-27A	146A
Z0-27B	146A
Z0206A(HEP)	5005A
Z0206(HEP)	5005A
Z0208A(HEP)	5007A
Z0208(HEP)	5007A
Z0210(HEP)	5009A
Z0211	135A
Z0211A(HEP)	5010A
Z0212	136A
Z0212A(HEP)	5011A
Z0214	137A
Z0214A(HEP)	5013A
Z0215A(HEP)	5014A
Z0215(HEP)	5014A
Z0216	138A
Z0216A(HEP)	5015A
Z0217	5072A
Z0217A(HEP)	5016A
Z0219	139A
Z0219A(HEP)	5018A
Z0220	140A
Z0220A(HEP)	5019A
Z0222	142A
Z0225	145A
Z0228	5077A
Z0230(HEP)	5029A
Z0231(HEP)	5030A
Z0234	146A
Z0254	5098A
Z0256	5099A
Z0401(HEP)	5066A
Z0402	134A
Z0403(HEP)	5067A
Z0405(HEP)	5069A
Z0406	135A
Z0407	136A
Z0408	137A
Z0409(HEP)	5071A
Z0410	138A
Z0411	5072A
Z0412	139A
Z0413	140A
Z0414	5074A
Z0415	142A
Z0416	143A
Z0417	144A
Z0418	145A
Z0419	5075A
Z0420	5077A
Z0421(HEP)	5079A
Z0422(HEP)	5080A
Z0423	5081A
Z0424	146A
Z0426	147A
Z0427	5085A
Z0428(HEP)	5086A
Z0430(HEP)	5088A
Z0432	148A
Z0433	149A
Z0436	150A
Z0438(HEP)	5096A
Z0439	151A
Z0440(HEP)	5097A
Z0442(HEP)	5100A
Z0444(HEP)	5103A
Z0445(HEP)	5105A
Z0201OA(HEP)	5009A
Z0A2.4	5000A
Z0A3.3	134A

To Be Replaced	ECG Replacement
Z0A3.9	134A
Z0B2.4	5061A
Z0B2.7	5063A
Z0B3.0	5065A
Z0B3.3	5066A
Z0B3.6	134A
Z0B3.9	5067A
Z0B4.3	5068A
Z0B4.7	5069A
Z0B5.1	5116A
Z0B5.6	136A
Z0B6.2	137A
Z0B6.8	5071A
Z0B7.5	138A
Z0B8.2	5072A
Z0B9.1	139A
Z0B10	140A
Z0B11	5074A
Z0B12	142A
Z0B-12	142A
Z0B13	143A
Z0B-15	145A
Z0B15	145A
Z0B16	5075A
Z0B18	5077A
Z0B20	5079A
Z0B22	5080A
Z0B24	5081A
Z0B27	146A
Z0B27A	146A
Z0B30	5084A
Z0B33	147A
Z0C3.3	134A
Z0C3.9	134A
Z0C4.7	135A
Z0C5.1	135A
Z0C5.6	136A
Z0C6.2	137A
Z0C6.8	5014A
Z0C8.2	5016A
Z0C9.1	139A
Z0C10	140A
Z0C12	142A
Z0C15	145A
Z0C-15	145A
Z0C18	5027A
Z0C20	5029A
Z0C22	5030A
Z0C27	146A
Z0C27A	146A
Z0D3.3	134A
Z0D3.9	134A
Z0D4.7	135A
Z0D5.1	135A
Z0D5.6	136A
Z0D6.2	137A
Z0D8.2	5016A
Z0D9.1	139A
Z0D10	140A
Z0D12	142A
Z0D15	145A
Z0D-15	145A
Z0D20	5029A
Z0D22	5030A
Z0D27	5033A
Z0D27B	146A
Z1A2.4	5000A
Z1A2.7	5002A
Z1A3.3	134A
Z1A3.9	134A
Z1A4.7	5009A
Z1A8.2	5072A
Z1A8.2A	5072A
Z1A8.2B	5072A
Z1A103-018	125
Z1B2.7	5063A
Z1B3.0	5065A
Z1B3.3	5066A
Z1B3.6	134A
Z1B3.9	5067A
Z1B4.3	5068A
Z1B4.7	5069A
Z1B5.1	135A
Z1B5.6	136A
Z1B6.2	137A
Z1B6.8	5071A
Z1B7.5	138A
Z1B8.2	5072A
Z1B9.1	139A
Z1B10	140A
Z1B11	5074A
Z1B12	142A
Z1B13	143A
Z1B-15	145A
Z1B15	145A
Z1B16	5075A
Z1B18	5077A
Z1B20	5079A
Z1B22	5080A
Z1B24	5081A
Z1B27	146A
Z1B27A	146A
Z1B30	5084A
Z1B33	147A
Z1C3.3	134A
Z1C3.9	134A
Z1C4.7	135A
Z1C5.1	135A
Z1C5.6	135A
Z1C6.2	137A
Z1C8.2	5016A
Z1C9.1	5018A
Z1C10	140A
Z1C12	142A
Z1C15	145A

To Be Replaced	ECG Replacement
Z1C-15	145A
Z1C18	5027A
Z1C20	5029A
Z1C22	5030A
Z1C27	146A
Z1C27B	146A
Z1D3.3	134A
Z1D3.9	5007A
Z1D4.7	135A
Z1D5.1	135A
Z1D5.6	136A
Z1D6.2	137A
Z1D7.5	138A
Z1D8.2	5016A
Z1D9.1	5018A
Z1D10	140A
Z1D12	142A
Z1D15	145A
Z1D-15	145A
Z1D18	5027A
Z1D20	5029A
Z1D22	5030A
Z1D27	5033A
Z1D27A	146A
Z2A33F	5066A
Z2A36F	134A
Z2A51F	135A
Z2A56CF	136A
Z2A56F	136A
Z2A62F	137A
Z2A82F	5072A
Z2A91F	139A
Z2A120F	142A
Z2A150F	145A
Z2A-150F	145A
Z2B3.3	5111A
Z2B3.6	5112A
Z2B3.9	5113A
Z2B4.3	5114A
Z2B4.7	5115A
Z2B5.1	5116A
Z2B5.6	5117A
Z2B6.2	5119A
Z2B6.8	5120A
Z2B7.5	5121A
Z2B8.2	5122A
Z2B9.1	5124A
Z2B10	5125A
Z2B11	5126A
Z2B12	5127A
Z2B13	5128A
Z2B15	5130A
Z2B16	5131A
Z2B18	5133A
Z2B20	5135A
Z2B22	5136A
Z2B24	5137A
Z2B27	5139A
Z2B30	5141A
Z2B33	5142A
Z2B36	5143A
Z2B43	5145A
Z2B47	5146A
Z2B51	5147A
Z2B56	5148A
Z2B62	5150A
Z2B68	5151A
Z2B75	5152A
Z2B82	5153A
Z2B91	5155A
Z2B100	5156A
Z2B110	5157A
Z2B120	5158A
Z2B130	5159A
Z2B150	5161A
Z2B160	5162A
Z2B180	5164A
Z2B200	5166A
Z2C3.9	5113A
Z2C4.7	5115A
Z2C5.6	5117A
Z2C6.2	5119A
Z2C7.5	5121A
Z2C9.1	5124A
Z2C10	5125A
Z2C12	5127A
Z2C15	5130A
Z2C18	5133A
Z2C22	5136A
Z2C33	5142A
Z2D3.9	5113A
Z2D5.6	5117A
Z2D6.2	5119A
Z2D7.5	5121A
Z2D9.1	5124A
Z2D10	5125A
Z2D12	5127A
Z2D15	5130A
Z2D18	5133A
Z2D22	5136A
Z2D27	5139A
Z2D33	5142A
Z3B3.3	5172A
Z3B3.6	5173A
Z3B3.9	5174A
Z3B4.3	5175A
Z3B4.7	5176A
Z3B5.1	5177A
Z3B5.6	5178A
Z3B6.2	5180A
Z3B6.8	5181A
Z3B7.5	5182A
Z3B8.2	5183A
Z3B9.1	5185A
Z3B10	5186A

To Be Replaced	ECG Replacement
Z3B11	5187A
Z3B12	5188A
Z3B13	5189A
Z3B15	5191A
Z3B16	5192A
Z3B18	5194A
Z3B20	5196A
Z3B22	5197A
Z3B24	5198A
Z3B27	5200A
Z3B30	5202A
Z3B33	5203A
Z3B36	5204A
Z3B39	5205A
Z3B39CE	5113A
Z3B43	5206A
Z3B47	5208A
Z3B47CF	5115A
Z3B51	5210A
Z3B56	5212A
Z3B56CF	5117A
Z3B62	5214A
Z3B62CF	5119A
Z3B68	5215A
Z3B75	5216A
Z3B75CF	5121A
Z3B82	5217A
Z3B91	5219A
Z3B91CF	5124A
Z3B100	5220A
Z3B100CF	5125A
Z3B110	5222A
Z3B120	5223A
Z3B120CF	5127A
Z3B130	5224A
Z3B150	5226A
Z3B150CF	5130A
Z3B160	5227A
Z3B180CF	5133A
Z3B200	5232A
Z3B220CF	5136A
Z3B240CF	5137A
Z3B270CF	5139A
Z3B330CF	5142A
Z3B560CF	5148A
Z3B820CF	5153A
Z3B1000CF	5156A
Z3.3	5066A
Z3.6	134A
Z3.9	134A
Z3.9(Zener)	5067A
Z4A8.2	5072A
Z4B3.0	5065A
Z4B3.3	5066A
Z4B3.6	134A
Z4B3.9	5067A
Z4B4.3	5068A
Z4B4.7	5069A
Z4B5.1	5116A
Z4B5.6	136A
Z4B6.2	137A
Z4B6.8	5071A
Z4B7.5	138A
Z4B8.2	5072A
Z4B9.1	139A
Z4B10	140A
Z4B12	142A
Z4B13	143A
Z4B-15	145A
Z4B15	145A
Z4B16	5075A
Z4B18	5077A
Z4B20	5079A
Z4B22	5080A
Z4B24	5081A
Z4B27	146A
Z4B27-2	146A
Z4B30	5084A
Z4B33	147A
Z4B36	5085A
Z4B39	5086A
Z4B43	5087A
Z4B47	5088A
Z4B51	5089A
Z4B56	5090A
Z4B62	149A
Z4B68	5092A
Z4B75	5093A
Z4B82	150A
Z4B91	5095A
Z4B100	5096A
Z4B110	151A
Z4B120	5097A
Z4B130	5098A
Z4B150	5100A
Z4B160	5101A
Z4B180	5103A
Z4B200	5105A
Z4C3.6	134A
Z4C5.6	136A
Z4D3.6	134A
Z4D5.6	136A
Z4MW333	123A
Z4X5.1A	135A
Z4X5.1B	135A
Z4X5.6	136A
Z4X9.1	139A
Z4X11	141A
Z4X12	142A
Z4X13	143A
Z4X14	144A
Z4X14B	144A
Z4X15	145A
Z4X-15	145A
Z4XL6.2	137A

To Be Replaced	ECG Replacement
Z4XL6.2B	137A
Z4XL7.5	138A
Z4XL9.1	139A
Z4XL9.1B	139A
Z4XL12	142A
Z4XL12B	142A
Z4XL14	144A
Z4XL14B	144A
Z4XL75	138A
Z4.3	5068A
Z4.7	5069A
Z5A3.3	5005A
Z5A3.9	134A
Z5A20	5079A
Z5B2	142A
Z5B3.0	5065A
Z5B3.3	5066A
Z5B3.6	134A
Z5B3.9	5067A
Z5B4.3	5068A
Z5B4.7	5069A
Z5B5.1	135A
Z5B5.6	136A
Z5B6.2	137A
Z5B6.8	5071A
Z5B7.5	138A
Z5B8.2	5072A
Z5B9.1	139A
Z5B10	140A
Z5B11	5074A
Z5B12	142A
Z5B13	143A
Z5B-15	145A
Z5B15	145A
Z5B16	5075A
Z5B18	5077A
Z5B20	5079A
Z5B22	5080A
Z5B24	5081A
Z5B27	146A
Z5B30	5084A
Z5B33	147A
Z5C3.3	134A
Z5C3.9	134A
Z5C4.7	135A
Z5C5.1	135A
Z5C5.6	136A
Z5C6.2	137A
Z5C6.8	5014A
Z5C8.2	5016A
Z5C9.1	139A
Z5C10	140A
Z5C12	142A
Z5C15	145A
Z5C-15	145A
Z5C18	5027A
Z5C20	5029A
Z5C22	5030A
Z5D3.3	134A
Z5D3.9	134A
Z5D4.7	135A
Z5D5.1	135A
Z5D5.6	136A
Z5D6.2	137A
Z5D6.8	5014A
Z5D8.2	5016A
Z5D9.1	139A
Z5D10	140A
Z5D12	142A
Z5D15	145A
Z5D-15	145A
Z5D18	5027A
Z5D20	5029A
Z5D22	5030A
Z5D91CF	5185A
Z5D100CF	5186A
Z5D120CF	5188A
Z5D150CF	5191A
Z5D180CF	5194A
Z5D220CF	5197A
Z5D270CF	5200A
Z5D330CF	5203A
Z5D560CF	5029A
Z5D820CF	5217A
Z5D1000CF	5220A
Z5.6	136A
Z6	5070A
Z6.2	137A
Z6.2L	137A
Z6.8	5071A
Z7.5	138A
Z8.2	5072A
Z8.2A	5072A
Z8.2B	5072A
Z8.2C	5072A
Z8.2D	5072A
Z10	140A
Z10K	140A
Z11	5074A
Z12	142A
Z12A	142A
Z12K	142A
Z12.0	5021A
Z13	143A
Z-15	145A
Z15	145A
Z15K	145A
Z-15K	145A
Z18	5077A
Z20	104
Z22	5080A
Z27	146A
Z27-A	146A
Z33	147A
Z33.3B	5066A

To Be Replaced	ECG Replacement
Z39	5086A
Z82B	150A
Z92	194
Z101	5072A
Z111Z	142A
Z-175-011	177
Z430	5141A
Z537	147A
Z631	149A
Z694	139A
Z714	139A
Z801	137A
Z-963B	142A
Z1000	5005A
Z1002	5007A
Z1004	5009A
Z-1004	5069A
Z1006	5011A
Z-1006	136A
Z1008	5014A
Z1010	5016A
Z-1010	138A
Z1012	5019A
Z-1012	5019A
Z1014	5021A
Z-1014	142A
Z1016	5024A
Z-1016	145A
Z-1016A	145A
Z1018	5027A
Z1020	5030A
Z1022	5033A
Z-1022	146A
Z-1022-3	146A
Z1024	5036A
Z-1024	147A
Z1100	5067A
Z1100-C	5067A
Z1102	5069A
Z-1102	5069A
Z1102-C	5069A
Z1103	135A
Z1104	136A
Z-1104	136A
Z1104-C	136A
Z1106	5071A
Z1106-C	5071A
Z1107	138A
Z1108	5072A
Z1108-C	5072A
Z1109	139A
Z1110	140A
Z1110-C	140A
Z1112	142A
Z1112-C	142A
Z-1112C	142A
Z1114	145A
Z-1114	145A
Z1114-C	145A
Z1116	5077A
Z1116-C	5077A
Z1118	5080A
Z1118-C	5080A
Z1120	146A
Z-1120	146A
Z1120-C	146A
Z-1122	147A
Z1122	147A
Z-1128	148A
Z1128	5090A
Z1130	149A
Z-1132	150A
Z1132	150A
Z1134	151A
Z-1140	136A
Z1140	136A
Z-1145	136A
Z1145	136A
Z-1150	136A
Z1150	136A
Z-1155	136A
Z1155	136A
Z-1160	136A
Z1160	136A
Z-1165	136A
Z1165	136A
Z-1170	136A
Z1170	136A
Z1202	5069A
Z1212	142A
Z1214	145A
Z1216	5077A
Z1220	146A
Z1222	147A
Z1226	148A
Z-1240	136A
Z1240	5011A
Z-1245	136A
Z1245	5011A
Z-1250	136A
Z1250	136A
Z-1255	136A
Z1255	136A
Z-1260	136A
Z1260	136A
Z-1265	136A
Z1265	136A
Z-1270	136A
Z1270	136A
Z1302	5176AK
Z1304	5178AK
Z1310	5186A
Z1312	5188A
Z1314	5191A
Z1316	5194A

To Be Replaced	ECG Replacement
Z1318	5197A
Z1320	5200A
Z1322	5203A
Z1324	5205A
Z1326	5208A
Z1328	5212A
Z1330	5215A
Z1332	5217A
Z1334	5220A
Z1336	5223A
Z1338	5226A
Z1340	5230A
Z-1540	136A
Z1540	136A
Z-1545	136A
Z1545	136A
Z-1550	136A
Z1550	5011A
Z-1555	136A
Z1555	136A
Z-1560	136A
Z1560	136A
Z-1565	136A
Z1565	136A
Z-1570	136A
Z1570	136A
Z2500(HEP)	5111A
Z2502(HEP)	5113A
Z2504(HEP)	5115A
Z2506(HEP)	5117A
Z2508(HEP)	5119A
Z2510(HEP)	5121A
Z2513(HEP)	5124A
Z2514(HEP)	5125A
Z2516(HEP)	5127A
Z2519(HEP)	5130A
Z2522(HEP)	5133A
Z2525	5136A
Z2526(HEP)	5137A
Z2528(HEP)	5139A
Z2530	5141A
Z2531(HEP)	5142A
Z2537(HEP)	5148A
Z2542(HEP)	5153A
Z2545(HEP)	5156A
Z2547(HEP)	5158A
Z2548	5159A
Z3305	5247A
Z3307	5249A
Z3309	5252A
Z3311	5254A
Z3314	5257A
Z3317	5260A
Z3320	5263A
Z3323	5266A
Z3325	5269A
Z3327	5271A
Z3334	5278A
Z3340	5285A
Z3500(HEP)	5174AK
Z3502(HEP)	5176AK
Z3504(HEP)	5178AK
Z3505(HEP)	5180AK
Z3507(HEP)	5182AK
Z3511(HEP)	5185A
Z3512(HEP)	5186A
Z3514(HEP)	5188A
Z3516(HEP)	5191A
Z3518(HEP)	5194A
Z3520(HEP)	5197A
Z3522(HEP)	5200A
Z3524(HEP)	5203A
Z3530(HEP)	5212A
Z3534(HEP)	5217A
Z3536(HEP)	5220A
Z4728A	5066A
Z4729A	134A
Z4730A	5067A
Z4731A	5068A
Z4732A	5069A
Z4733A	5116A
Z4734A	136A
Z4735A	137A
Z4736A	5071A
Z4737A	138A
Z4738A	5072A
Z4739A	139A
Z4740A	140A
Z4741A	5074A
Z4742A	142A
Z4743A	143A
Z4744A	145A
Z4745A	5075A
Z4746A	5077A
Z4747A	5079A
Z4748A	5080A
Z4749A	5081A
Z4750A	146A
Z4751A	5084A
Z4752A	147A
Z4753A	5085A
Z4754A	5086A
Z4755A	5087A
Z4756A	5088A
Z4757A	5089A
Z4758A	5090A
Z4759A	149A
Z4760A	5092A
Z4761A	5093A
Z4762A	150A
Z4763A	5095A
Z4764A	5096A
Z-5140	136A
Z5140	136A
Z-5145	136A

To Be Replaced	ECG Replacement
Z5145	136A
Z-5150	136A
Z5150	136A
Z-5155	136A
Z5155	136A
Z-5160	136A
Z5160	136A
Z-5165	136A
Z5165	136A
Z-5170	136A
Z5170	136A
Z-5240	136A
Z5240	136A
Z-5245	136A
Z5245	136A
Z-5250	136A
Z5250	136A
Z-5255	136A
Z5255	136A
Z-5260	136A
Z5260	136A
Z-5265	136A
Z5265	136A
Z-5270	136A
Z5270	136A
Z-5540	136A
Z5540	136A
Z-5545	136A
Z5545	136A
Z-5550	136A
Z5550	136A
Z-5555	136A
Z5555	136A
Z-5560	136A
Z5560	136A
Z-5565	136A
Z5565	136A
Z-5570	136A
Z5570	136A
Z10003	923D
Z-28058-1	123A
Z330611	116
ZA6.8B	5071A
ZA7.5B	138A
ZA8.2	5072A
ZA8.2A	5072A
ZA8.2B	5072A
ZA9.1	139A
ZA9.1A	139A
ZA9.1B	139A
ZA10B	140A
ZA11	141A
ZA11A	141A
ZA11B	5074A
ZA12	142A
ZA12A	142A
ZA12B	142A
ZA13	143A
ZA13A	143A
ZA13B	143A
ZA15	145A
ZA15A	145A
ZA15B	145A
ZA15V	145A
ZA16B	5075A
ZA18B	5077A
ZA20B	5079A
ZA22B	5080A
ZA24B	5081A
ZA27	146A
ZA27A	146A
ZA27B	146A
ZA30B	5084A
ZA33	147A
ZA33A	147A
ZA33B	147A
ZA36B	5085A
ZA39B	5086A
ZA43B	5087A
ZA47B	5088A
ZA51B	5089A
ZA56	148A
ZA56A	148A
ZA56B	5090A
ZA62	149A
ZA62A	149A
ZA62B	149A
ZA68B	5092A
ZA75B	5093A
ZA82	150A
ZA82A	150A
ZA82B	150A
ZA91B	5095A
ZA100B	5096A
ZA110	151A
ZA110A	151A
ZA110B	151A
ZA120B	5097A
ZA130B	5098A
ZA150	166
ZA150B	5100A
ZA160B	5101A
ZA180B	5103A
ZA200B	5105A
ZA29312	519
ZA100962E	108
ZA105604	102A
ZAC6.8B	5120A
ZAC7.5	5121A
ZAC7.5A	5121A
ZAC7.5B	5121A
ZAC9.1	5124A
ZAC9.1A	5124A
ZAC9.1B	5124A
ZAC10	5125A

To Be Replaced	ECG Replacement
ZAC10A	5125A
ZAC10B	5125A
ZAC11B	5126A
ZAC12	5127A
ZAC12A	5127A
ZAC12B	5127A
ZAC13B	5128A
ZAC15	5130A
ZAC15A	5130A
ZAC15B	5130A
ZAC16B	5131A
ZAC18	5133A
ZAC18A	5133A
ZAC18B	5133A
ZAC20B	5135A
ZAC22	5136A
ZAC22A	5136A
ZAC22B	5136A
ZAC24B	5137A
ZAC27	5139A
ZAC27A	5139A
ZAC27B	5139A
ZAC30B	5141A
ZAC33	5142A
ZAC33A	5142A
ZAC33B	5142A
ZAC36B	5143A
ZAC39B	5144A
ZAC43B	5145A
ZAC47B	5146A
ZAC51B	5147A
ZAC56	5148A
ZAC56A	5148A
ZAC56B	5148A
ZAC62B	5150A
ZAC68B	5151A
ZAC75B	5152A
ZAC82	5153A
ZAC82A	5153A
ZAC82B	5153A
ZAC 82.B	5122A
ZAC91B	5155A
ZAC100	5156A
ZAC100A	5156A
ZAC100B	5156A
ZAC110B	5157A
ZAC120	5158A
ZAC120A	5158A
ZAC120B	5158A
ZAC130B	5159A
ZAC150B	5161A
ZAC160B	5162A
ZAC180B	5164A
ZAC200B	5166A
ZAG-9673	159
ZAR110	5809
ZAR210	5890
ZAR610	5809
ZAR710	5809
ZAX9.1	118
ZB-1	141A
ZB1	5079A
ZB1-1	5074A
ZB1-6	5070A
ZB1-8	5072A
ZB1-9	139A
ZB1-9V	139A
ZB-1-9.5	139A
ZB-1-9.5V	139A
ZB1-10	142A
ZB1-11	141A
ZB1-12	142A
ZB1-13	143A
ZB1-14	144A
ZB1-15	145A
ZB-1-15A	118
ZB1-16	5075A
ZB1-16V	5075A
ZB1-18	5077A
ZB1-19	5078A
ZB1-23	5081A
ZB1-27	146A
ZB1-35	147A
ZB-1-35	147A
ZB1-50	5089A
ZB1-100	5096A
ZB1-110	151A
ZB1-125	5098A
ZB1-130	5098A
ZB-31.12	142A
ZB1.8	138A
ZB3.3	134A
ZB3.3B	5066A
ZB3.6B	134A
ZB3.9B	5067A
ZB4.3B	5068A
ZB4.7	135A
ZB4.7B	5069A
ZB5.1	135A
ZB5.1B	5116A
ZB5.6	136A
ZB5.6A	136A
ZB5.6B	136A
ZB6.2	137A
ZB6.2A	137A
ZB6.2B	137A
ZB6.8	5014A
ZB6.8B	5071A
ZB7.5	138A
ZB7.5A	138A
ZB8.2	5016A
ZB8.2B	5072A
ZB9.1	139A
ZB9.1A	139A
ZB9.1B	139A

To Be Replaced	ECG Replacement
ZB10	140A
ZB10A	140A
ZB10B	140A
ZB10X	140A
ZB-11	5074A
ZB11	5074A
ZB11A	5074A
ZB11B	5074A
ZB12	142A
ZB12A	142A
ZB12B	142A
ZB13	143A
ZB13A	145A
ZB13B	143A
ZB15	145A
ZB15A	145A
ZB-15A	145A
ZB15B	145A
ZB16	5075A
ZB16A	5075A
ZB16B	5075A
ZB18	5027A
ZB18A	5077A
ZB18B	5077A
ZB20	5029A
ZB20B	5079A
ZB22	5030A
ZB22B	5080A
ZB24	5081A
ZB24A	5081A
ZB24B	5081A
ZB27	146A
ZB27-3	146A
ZB27A	146A
ZB27A-3	146A
ZB27B	146A
ZB27B-3	146A
ZB30	5084A
ZB30A	5084A
ZB30B	5084A
ZB33	147A
ZB33A	147A
ZB33B	147A
ZB36	5085A
ZB36B	5085A
ZB39	5144A
ZB39B	5086A
ZB43B	5087A
ZB47B	5088A
ZB51B	5089A
ZB56A	5090A
ZB56B	5090A
ZB62	149A
ZB62A	149A
ZB62B	149A
ZB68B	5092A
ZB75B	5093A
ZB82	150A
ZB82A	150A
ZB82B	150A
ZB91B	5095A
ZB100	5096A
ZB100B	5096A
ZB110	151A
ZB110A	151A
ZB110B	151A
ZB120	5097A
ZB120B	5097A
ZB130B	5098A
ZB150	5100A
ZB150B	5100A
ZB160B	5101A
ZB180	5103A
ZB180B	5103A
ZB200	5105A
ZB200B	5105A
ZBC3.3B	5111A
ZBC3.6B	5112A
ZBC3.9B	5113A
ZBC4.3B	5114A
ZBC4.7B	5115A
ZBC5.1B	5116A
ZBC5.6B	5117A
ZBC6.2B	5119A
ZBC6.8B	5120A
ZBC7.5	5121A
ZBC7.5B	5121A
ZBC8.2B	5122A
ZBC9.1B	5124A
ZBC10B	5125A
ZBC11B	5126A
ZBC12	5127A
ZBC12B	5127A
ZBC13B	5128A
ZBC14B	5129A
ZBC15	5130A
ZBC15B	5130A
ZBC17B	5132A
ZBC18	5133A
ZBC18B	5133A
ZBC19B	5134A
ZBC20B	5135A
ZBC22	5136A
ZBC22B	5136A
ZBC24B	5137A
ZBC25B	5138A
ZBC27	5139A
ZBC27B	5139A
ZBC30B	5141A
ZBC33	5142A
ZBC33B	5142A
ZBC36B	5143A
ZBC39B	5144A
ZBC43B	5145A
ZBC47B	5146A

To Be Replaced	ECG Replacement
ZBC51B	5147A
ZBC56	5148A
ZBC56B	5148A
ZBC62B	5150A
ZBC68B	5151A
ZBC75B	5152A
ZBC82	5153A
ZBC91B	5155A
ZBC100	5156A
ZBC100B	5156A
ZBC110B	5157A
ZBC120	5158A
ZBC120B	5158A
ZBC130B	5159A
ZBC140B	5160A
ZBC150B	5161A
ZBC160B	5162A
ZBC180B	5164A
ZBC200B	5166A
ZBI-09	139A
ZBU-19	5079A
ZC010	140A
ZC011	5074A
ZC012	142A
ZC013	143A
ZC-015	145A
ZC015	145A
ZC016	5075A
ZC018	5077A
ZC020	5079A
ZC022	5080A
ZC024	5081A
ZC027	146A
ZC027-3	146A
ZC030	5084A
ZC033	147A
ZC1N34A	109
ZC1S358S	177
ZC2SA70	160
ZC2SA71	160
ZC2SA71A	160
ZC2SA101	160
ZC2SA101BA	160
ZC2SA102	160
ZC2SA102CA	160
ZC2SA103	160
ZC2SA103CA	160
ZC2SA377	160
ZC2SA700A	160
ZC2SA700B	160
ZC2SB172	158
ZC2SB172A	158
ZC3.3B	5111A
ZC3.6B	5112A
ZC3.9B	5113A
ZC4.3B	5114A
ZC4.7B	5115A
ZC5.1B	5116A
ZC5.6B	5117A
ZC6.2B	5119A
ZC6.8B	5120A
ZC7.5	5121A
ZC7.5B	5121A
ZC8.2B	5122A
ZC9.1	5124A
ZC9.1B	5124A
ZC10	5125A
ZC10B	5125A
ZC11B	5126A
ZC12	5127A
ZC12B	5127A
ZC13B	5128A
ZC14B	5129A
ZC15B	5130A
ZC17B	5132A
ZC18	5133A
ZC18B	5133A
ZC19B	5134A
ZC20B	5135A
ZC22	5136A
ZC22B	5136A
ZC24B	5137A
ZC25B	5138A
ZC27	5139A
ZC27B	5139A
ZC30B	5141A
ZC33	5142A
ZC33B	5142A
ZC36B	5143A
ZC39B	5144A
ZC43B	5145A
ZC47B	5146A
ZC51B	5147A
ZC56	5148A
ZC56B	5148A
ZC62B	5150A
ZC68B	5151A
ZC75B	5152A
ZC82	5153A
ZC82B	5153A
ZC91B	5155A
ZC100	5156A
ZC100B	5156A
ZC120	5158A
ZC120B	5158A
ZC130B	5159A
ZC-140(43.0V Zener)	5087A
ZC-140(140V Zener)	5099A
ZC140B	5160A
ZC-140(Transistor)	152
ZC-140(Zener)	5037A
ZC150B	5161A
ZC160B	5162A
ZC200B	5166A
ZC700	610

To Be Replaced	ECG Replacement
ZC702	611
ZC703	612
ZC800	611
ZC800A	611
ZC802	613
ZC802A	613
ZC2010	5125A
ZC2012	5127A
ZC2013	5128A
ZC2015	5130A
ZC2016	5131A
ZC2018	5133A
ZC2020	5135A
ZC2022	5136A
ZC2024	5137A
ZC2027	5139A
ZC2030	5141A
ZC2033	5142A
ZC5008	5183A
ZC5009	5185A
ZC5010	5186A
ZC5011	5187A
ZC5012	5188A
ZC5013	5189A
ZC5015	5191A
ZC5016	5192A
ZC5018	5194A
ZC5020	5196A
ZC5022	5197A
ZC5024	5198A
ZC5027	5200A
ZC5030	5202A
ZC5033	5203A
ZC5036	5204A
ZC5039	5205A
ZC5043	5206A
ZC5047	5208A
ZC5051	5210A
ZC5062	5214A
ZC5068	5215A
ZC5075	5216A
ZC5082	5217A
ZC5091	5219A
ZC5099	5220A
ZCC3.3B	5111A
ZCC3.6B	5112A
ZCC3.9B	5113A
ZCC4.3B	5114A
ZCC4.7B	5115A
ZCC5.1B	5116A
ZCC5.6B	5117A
ZCC6.2B	5119A
ZCC6.8B	5120A
ZCC7.5	5121A
ZCC7.5B	5121A
ZCC8.2B	5122A
ZCC9.1B	5124A
ZCC10B	5125A
ZCC11B	5126A
ZCC12	5127A
ZCC12B	5127A
ZCC13B	5128A
ZCC14B	5129A
ZCC15	5130A
ZCC15B	5130A
ZCC17B	5132A
ZCC18B	5133A
ZCC19B	5134A
ZCC20B	5135A
ZCC22	5136A
ZCC22B	5136A
ZCC24B	5137A
ZCC25B	5138A
ZCC27	5139A
ZCC27B	5139A
ZCC30B	5141A
ZCC33	5142A
ZCC36B	5143A
ZCC39B	5144A
ZCC43B	5145A
ZCC47B	5146A
ZCC51B	5147A
ZCC56	5148A
ZCC56B	5148A
ZCC62B	5150A
ZCC68B	5151A
ZCC75B	5152A
ZCC82	5153A
ZCC82B	5153A
ZCC91B	5155A
ZCC100	5156A
ZCC100B	5156A
ZCC110B	5157A
ZCC120	5158A
ZCC120B	5158A
ZCC130B	5159A
ZCC140B	5160A
ZCC150B	5161A
ZCC160B	5162A
ZCC180B	5164A
ZCC200B	5166A
ZCOM3679	116
ZCOM-5683-0	116
ZCSR16C	5524
ZCSR16D	5526
ZCSR16E	5527
ZCSR16F	5528
ZCSR16G	5529
ZCSR16H	5530
ZCSR16J	5531
ZD012	142A
ZD015	145A
ZD-015	145A
ZD027	146A
ZD-027-3	146A
ZD033	147A
ZD3.6B	134A
ZD3.9	5113A
ZD3.9B	5067A
ZD4.3	5114A
ZD4.3B	5068A
ZD4.7	5115A
ZD4.7B	5069A
ZD5.1	5116A
ZD5.1A	135A
ZD5.1B	5116A
ZD5.6	5117A
ZD5.6A	136A
ZD5.6B	136A
ZD6.2	5119A
ZD6.2A	137A
ZD6.2B	137A
ZD6.8B	5071A
ZD7.5	5121A
ZD7.5B	138A
ZD8.2	5122A
ZD8.2B	5072A
ZD9.1	5124A
ZD9.1A	139A
ZD9.1B	139A
ZD10	5125A
ZD10B	140A
ZD11	5126A
ZD11B	5074A
ZD12	5127A
ZD12A	142A
ZD12B	142A
ZD13	5128A
ZD13B	143A
ZD-15	145A
ZD15	5130A
ZD15A	145A
ZD-15A	145A
ZD-15B	145A
ZD15B	145A
ZD16	5131A
ZD16B	5075A
ZD18	5133A
ZD18B	5077A
ZD20	5135A
ZD20B	5079A
ZD22	5136A
ZD22B	5080A
ZD24	5137A
ZD24B	5081A
ZD27	5139A
ZD27-3	146A
ZD27A	146A
ZD27B	146A
ZD30	5141A
ZD30B	5084A
ZD33	5142A
ZD33A	147A
ZD33B	147A
ZD36	5143A
ZD36A	134A
ZD36B	5085A
ZD39	5144A
ZD39B	5086A
ZD43	5145A
ZD43B	5087A
ZD47	5146A
ZD47B	5088A
ZD51	5147A
ZD51A	135A
ZD51B	5089A
ZD56	5148A
ZD56A	136A
ZD56B	5090A
ZD62	5150A
ZD62A	149A
ZD62B	149A
ZD68	5151A
ZD68B	5092A
ZD75	5152A
ZD75B	5093A
ZD82	150A
ZD82A	150A
ZD82B	150A
ZD91	5155A
ZD91A	138A
ZD91B	5095A
ZD100	5156A
ZD100B	5096A
ZD110	5157A
ZD110A	151A
ZD110B	151A
ZD120	5158A
ZD120B	5097A
ZD130	5159A
ZD130B	5098A
ZD150	5161A
ZD150B	5100A
ZD160	5162A
ZD160B	5101A
ZD180	5164A
ZD180B	5103A
ZD200	5166A
ZD200B	5105A
ZD2010	5125A
ZD2012	5127A
ZD2015	5130A
ZD2018	5133A
ZD2027	5139A
ZD2028	5136A
ZD2033	5142A
ZDP-D22-69:54	129
ZDT	123A
ZDT10	108
ZDT11	108
ZDT20	108
ZDT21	108
ZDT30	108
ZDT-30	108
ZDT31	108
ZDT-31	108
ZE-1.5	109
ZE4.7	5009A
ZE5.6	136A
ZE6.8	5014A
ZE8.2	5016A
ZE10	140A
ZE12	142A
ZE12A	142A
ZE12B	142A
ZE15	145A
ZE-15	145A
ZE15A	145A
ZE-15A	145A
ZE15B	145A
ZE-15B	145A
ZE-18	5027A
ZE22	5030A
ZE27	146A
ZE27A	146A
ZE27B	146A
ZE33	147A
ZE33A	147A
ZE33B	147A
ZE62	149A
ZE62A	149A
ZE62B	149A
ZE82	150A
ZE82A	150A
ZE82B	150A
ZE110	151A
ZE110A	151A
ZE110B	151A
ZEC5.6	136A
ZEC12	142A
ZEC27	146A
ZEN100	123A
ZEN101	129
ZEN102	123A
ZEN103	123A
ZEN104	108
ZEN105	161
ZEN106	159
ZEN107	159
ZEN108	108
ZEN109	108
ZEN110	123A
ZEN111	123A
ZEN112	123A
ZEN113	123A
ZEN114	123A
ZEN115	123A
ZEN116	199
ZEN117	229
ZEN118	108
ZEN119	123A
ZEN120	123A
ZEN121	229
ZEN122	159
ZEN123	132
ZEN124	221
ZEN125	194
ZEN127	123A
ZEN128	172A
ZEN129	6409
ZEN200	124
ZEN201	225
ZEN202	184
ZEN203	185
ZEN204	162
ZEN205	154
ZEN206	165
ZEN207	282
ZEN208	191
ZEN209	182
ZEN210	184
ZEN211	185
ZEN300	160
ZEN301	160
ZEN302	158
ZEN303	102
ZEN304	158
ZEN305	158
ZEN306	102
ZEN307	158
ZEN308	158
ZEN309	102A
ZEN310	102A
ZEN311	126
ZEN312	126
ZEN313	126
ZEN314	126
ZEN315	101
ZEN325	104
ZEN326	121
ZEN327	213
ZEN328	127
ZEN329	761
ZEN330	121
ZEN331	121
ZEN401	5806
ZEN403	5878
ZEN430	109
ZEN431	112
ZEN432	178MP
ZEN433	167
ZEN500	5013A
ZEN501	138A
ZEN502	5021A
ZEN503	5027A
ZEN504	5033A
ZEN505	138A
ZEN506	143A
ZEN507	144A
ZEN508	145A
ZEN512	147A
ZEN513	5098A
ZEN514	5099A
ZEN515	5085A
ZEN516	5137A
ZEN517	5141A
ZEN601	760
ZEN602	722
ZEN603	790
ZEN604	708
ZEN605	712
ZEN606	707
ZEN607	714
ZEN608	715
ZEN609	739
ZEN900	413
ZEN902	414
ZEN905	405
ZEN907	401
ZENER7-1V	138A
ZENER-122	142A
ZENER-132	5082A
ZENER-136	5078A
ZF2.7	5063A
ZF2.7P	5063A
ZF3.0	5065A
ZF3.0P	5065A
ZF3.3	5066A
ZF3.3P	5066A
ZF3.6	134A
ZF3.6P	134A
ZF3.9	5067A
ZF3.9P	5067A
ZF4.3	5068A
ZF4.3P	5068A
ZF4.7	5069A
ZF4.7P	5069A
ZF5.1	135A
ZF5.1P	5116A
ZF5.6	136A
ZF5.6P	136A
ZF6.2	137A
ZF6.2P	137A
ZF6.8	5071A
ZF6.8P	5071A
ZF7.5	138A
ZF7.5P	138A
ZF8A	5072A
ZF-8.2	5072A
ZF8.2	5072A
ZF8.2P	5072A
ZF9.1	139A
ZF9.1P	139A
ZF10	140A
ZF10P	140A
ZF11	5074A
ZF11P	5074A
ZF12	142A
ZF12A	142A
ZF12B	142A
ZF13	143A
ZF13P	143A
ZF-15	145A
ZF15	145A
ZF15A	145A
ZF-15A	145A
ZF15B	145A
ZF-15B	145A
ZF15P	145A
ZF-16	145A
ZF16	5075A
ZF16P	5075A
ZF18	5077A
ZF18P	5077A
ZF20	5079A
ZF20P	5079A
ZF22	5080A
ZF22P	5080A
ZF24	5081A
ZF24P	5081A
ZF27	146A
ZF27A	146A
ZF27B	146A
ZF27P	146A
ZF30	5084A
ZF30P	5084A
ZF33	147A
ZF33A	147A
ZF33B	147A
ZF33P	147A
ZF43	5068A
ZF62	149A
ZF62A	149A
ZF62B	149A
ZF82	150A
ZF82A	150A
ZF82B	150A
ZF413	5068A
ZFD9.1	139A
ZG2.7	5002A
ZG3.3	5005A
ZG3.9	134A
ZG4.7	135A
ZG5.6	136A
ZG6.8	5014A
ZG8.2	5016A
ZG9.1	139A
ZG10	140A
ZG12	142A
ZG15	145A
ZG-15	145A
ZG15A	145A
ZG15B	145A
ZG-15B	145A
ZG18	5027A
ZG22	5030A
ZG27	146A
ZG27A	146A
ZG27B	146A
ZG33	147A
ZG33A	147A
ZG33B	147A
ZG62	149A
ZG62A	149A
ZG62B	149A
ZG82	150A
ZG82A	150A
ZG82B	150A
ZH6.8B	5071A
ZH7.5B	138A
ZH8.2B	5072A
ZH9.1	139A
ZH9.1A	139A
ZH9.1B	139A
ZH10B	140A
ZH11	141A
ZH11A	141A
ZH11B	5074A
ZH12	142A
ZH12A	142A
ZH12B	142A
ZH13	143A
ZH13A	143A
ZH13B	143A
ZH15	145A
ZH-15	145A
ZH15A	145A
ZH-15A	145A
ZH-15B	145A
ZH15B	145A
ZH16B	5075A
ZH18B	5077A
ZH20B	5079A
ZH22B	5080A
ZH24B	5081A
ZH27	146A
ZH27A	146A
ZH27B	146A
ZH30B	5084A
ZH33	147A
ZH33A	147A
ZH33B	147A
ZH36B	5085A
ZH39B	5086A
ZH43B	5087A
ZH47B	5088A
ZH51B	5089A
ZH56	148A
ZH56A	148A
ZH56B	5090A
ZH62	149A
ZH62A	149A
ZH62B	149A
ZH68B	5092A
ZH75B	5093A
ZH82	150A
ZH82A	150A
ZH82B	150A
ZH91B	5095A
ZH110	151A
ZH110A	151A
ZH110B	151A
ZH120B	5097A
ZH130B	5098A
ZH150B	5100A
ZH160B	5101A
ZH180B	5103A
ZH200B	5105A
ZJ12	142A
ZJ12A	142A
ZJ12B	142A
ZJ13	158
ZJ15	145A
ZJ-15	145A
ZJ15A	145A
ZJ-15A	145A
ZJ15B	145A
ZJ-15B	145A
ZJ27	146A
ZJ27A	146A
ZJ27B	146A
ZJ33	147A
ZJ33A	147A
ZJ33B	147A
ZJ39A	5531
ZJ39L	5531
ZJ40	108
ZJ54A	5487
ZJ54L	5487
ZJ62	149A
ZJ62A	149A
ZJ62B	149A
ZJ72	160
ZJ73	160
ZJ82	150A
ZJ82A	150A
ZJ82B	150A
ZJ110	151A
ZJ110A	151A
ZJ110B	151A
ZJ226	5496
ZJ230	5527
ZJ252B	116
ZL6	5012A
ZM5.6	136A
ZM5.6B	136A
ZM6.2B	137A
ZM6.8B	5071A
ZM7.5B	138A
ZM8.2A	5072A
ZM8.2B	5072A
ZM8.2C	5072A
ZM8.2D	5072A
ZM9.1B	139A
ZM10B	140A
ZM11B	5074A
ZM12B	142A
ZM13B	143A
ZM14B	144A
ZM15B	5130A
ZM16B	5075A
ZM17B	5076A
ZM18B	5077A
ZM19B	5078A
ZM20B	5079A
ZM22B	5080A
ZM24B	5081A
ZM25B	5082A
ZM27B	146A
ZM30B	5084A
ZM33	147A
ZM33B	147A
ZM36B	5085A
ZM39B	5086A
ZM43B	5087A
ZM47B	5088A
ZM51B	5089A
ZM56B	5090A
ZM62B	149A
ZM68B	5092A
ZM75B	5093A
ZM82B	150A
ZM91B	5095A
ZMZ205	135A
ZMZ605	135A
ZN6386	263
ZN7400E	7400
ZN7401E	7401
ZN7402E	7402
ZN7404E	7404
ZN7405E	7405
ZN7410E	7410
ZN7420E	7420
ZN7428	7428
ZN7430E	7430
ZN7440E	7440
ZN7441AE	7441
ZN7450E	7450
ZN7451E	7451
ZN7453E	7453
ZN7454E	7454
ZN7460E	7460
ZN7470E	7470
ZN7472E	7472
ZN7473E	7473
ZN7474E	7474
ZN7475E	7475
ZN7476E	7476
ZN74107E	74107
ZN 35024712	197
ZN35050411	198
ZN 35050412	198
ZN 35050511	198
ZN 35062712	198
ZN37001003	1047
ZN37002001	1046
ZN37003008	738
ZN37004002	1050
ZN37007003	1109
ZN37011002	749
ZNR3K101	601
ZNR-3K471	601
ZNR3S251	601
ZO-12	142A
ZO-12A	142A
ZO-12B	142A
ZO-15	145A
ZO-15A	145A
ZO-15AC	145A
ZO-15B	145A
ZO-15BY	145A
ZO-27	146A
ZO-27A	146A
ZO-27B	146A
ZO-33	147A
ZO-33A	147A
ZO-33B	147A
ZO-62	149A
ZO-62A	149A
ZO-62B	149A
ZO-82	150A
ZO-82A	150A
ZO-82B	150A
ZO-110	151A
ZO-110A	151A
ZO-110B	151A
ZOA2.4	5000A
ZOA2.7	5002A
ZOB2.4	5061A
ZOB3.3	5066A
ZOB3.6	134A
ZOB4.3	5068A
ZOB4.7	5069A
ZOB5.1	135A
ZOB5.6	136A
ZOB6.2	137A
ZOB12	142A
ZOB15	145A
ZOB-15	145A
ZOB20	5079A
ZOB27	146A
ZOB27B	146A
ZOB33	147A
ZOB62	149A
ZOB82	150A
ZOB110	151A
ZOD6.2	137A
ZOD6.8	5071A
ZOD15	145A
ZOD-15	145A
ZOD18	5027A
ZOD27	146A
ZOD33	147A
ZOD62	149A
ZOD82	150A
ZOD110	151A
ZP2.7	5002A
ZP3.3	5005A
ZP3.9	5007A
ZP4.3	5068A
ZP4.7	5009A
ZP5.1	135A
ZP5.6	136A
ZP6.2	137A
ZP6.8	5014A
ZP8.2	5016A
ZP9.1	139A
ZP-9.1	139A
ZP9.1A	139A
ZP9.1B	139A
ZP10	140A
ZP12	142A
ZP12A	142A
ZP12B	142A
ZP15	145A
ZP-15	145A
ZP15A	145A
ZP-15A	145A
ZP15B	145A
ZP-15B	145A
ZP18	5027A
ZP20	5029A
ZP22	5030A
ZP27	146A
ZP27A	146A
ZP27B	146A
ZP33	147A
ZP33A	147A
ZP33B	147A
ZP62	149A
ZP62A	149A
ZP62B	149A
ZP82	150A
ZP82A	150A
ZP82B	150A
ZP110	151A
ZP110A	151A
ZP110B	151A
ZPD2.7	5063A
ZPD3	5065A
ZPD3.3	5066A
ZPD3.6	134A
ZPD3.9	5067A
ZPD4.3	5068A
ZPD5.1	5116A
ZPD5.6	136A
ZPD6.2	137A
ZPD6.8	5071A
ZPD7.5	138A
ZPD8.2	5072A
ZPD9.1	139A
ZPD10	140A
ZPD11	5074A
ZPD13	143A
ZPD15	145A
ZPD16	5075A
ZPD18	5077A
ZPD20	5079A
ZPD22	5080A
ZPD24	5081A
ZPD27	146A
ZPD30	5084A
ZPD33	147A
ZPD618	5071A
ZPU120	5158A
ZPY3.9	5113A
ZQ-6	5070A
ZQ9.1	139A
ZQ9.1A	139A
ZQ9.1B	139A
ZQ12	142A
ZQ12A	142A
ZQ12B	142A
ZQ15	145A
ZQ-15	145A
ZQ15A	145A
ZQ-15A	145A
ZQ15B	145A
ZQ-15B	145A
ZQ15X	145A
ZQ27	146A
ZQ27A	146A
ZQ27B	146A
ZQ33	147A
ZQ33A	147A
ZQ33B	147A
ZQ62	149A
ZQ62A	149A
ZQ62B	149A
ZQ82	150A
ZQ82A	150A
ZQ82B	150A
ZQ110	151A
ZQ110A	151A
ZQ110B	151A

To Be Replaced	ECG Replacement
ZR10	5800
ZR11	5801
ZR12	5802
ZR13	5804
ZR14	5804
ZR15	116
ZR20	5940
ZR21	5944
ZR22	5944
ZR50B793-1	142A
ZR50B793-3	146A
ZR50B849-1	146A
ZR50B921-1	146A
ZR50B921-2	138A
ZR50B921-3	145A
ZR51B155-2	5130A
ZR60	116
ZR61	116
ZR-61	116
ZR62	116
ZR63	116
ZR-63	116
ZR64	116
ZR66	116
ZR68	156
ZR89-50	137A
ZR200	5870
ZR201	5872
ZR202	5874
ZR204	5878
ZR206	5882
ZR208	5886
ZR500	116
ZR-500	116
ZR-590	116
ZR590A	116
ZR-590A	116
ZR601	5801
ZR602	5802
ZR604	5804
ZR606	5806
ZR608	156
ZR821-10	137A
ZR821-20	137A
ZR821-50	137A
ZR821-75	137A
ZR821-100	137A
ZR821-120	137A
ZR821-150	137A
ZR823-10	137A
ZR823-20	137A
ZR823-50	137A
ZR823-75	137A
ZR823-100	137A
ZR823-120	137A
ZR823-150	137A
ZR825-20	137A
ZR825-50	137A
ZR825-75	137A
ZR825-100	137A
ZR825-120	137A
ZR825-150	137A
ZR827-20	137A
ZR827-50	137A
ZR827-75	137A
ZR827-100	137A
ZR827-120	137A
ZR827-150	137A
ZR829-75	137A
ZR829-100	137A
ZR829-120	137A
ZR1025	116
ZR-1025	116
ZR1031	116
ZR-1031	116
ZR1035	116
ZR-1035	116
ZR1076	116
ZR-1076	116
ZS4F	177
ZS5.6	136A
ZS5.6A	136A
ZS5.6B	136A
ZS7	116
ZS8	116
ZS9.1	139A
ZS9.1A	139A
ZS9.1B	139A
ZS10A	116
ZS10B	116
ZS-10B	116
ZS12	142A
ZS12A	142A
ZS12B	142A
ZS15	145A
ZS15A	145A
ZS-15A	145A
ZS15B	145A
ZS-15B	145A
ZS20A	116
ZS-20A	116
ZS20B	116
ZS-20B	116
ZS21	116
ZS-21	116
ZS22	116
ZS23	116
ZS-23	116
ZS24	116
ZS-24	116
ZS25	116
ZS-25	116
ZS27	146A
ZS27A	146A
ZS27B	146A
ZS30	116
ZS30A	116
ZS-30A	116
ZS30B	116
ZS-30B	116
ZS31	116
ZS31A	116
ZS-31A	116
ZS31B	116
ZS-31B	116
ZS32	116
ZS32A	116
ZS-32A	116
ZS32B	116
ZS-32B	116
ZS33	147A
ZS33A	147A
ZS-33A	116
ZS33B	147A
ZS-33B	116
ZS34	116
ZS34A	116
ZS-34A	116
ZS34B	116
ZS-34B	116
ZS38	158
ZS40	177
ZS50	116
ZS-50	116
ZS51	116
ZS52	116
ZS-52	116
ZS53	116
ZS-53	116
ZS56	158
ZS61	137A
ZS62	149A
ZS62A	149A
ZS62B	149A
ZS70	116
ZS71	116
ZS-71	116
ZS72	116
ZS73	116
ZS-73	116
ZS74	116
ZS74B	116
ZS76	116
ZS78	125
ZS78A	125
ZS78B	125
ZS82	150A
ZS82A	150A
ZS82B	150A
ZS90	116
ZS91	116
ZS92	116
ZS94	116
ZS100	116
ZS101	116
ZS102	116
ZS103	116
ZS104	116
ZS108	116
ZS110	151A
ZS110A	151A
ZS110B	151A
ZS120	116
ZS121	116
ZS122	116
ZS123	116
ZS124	116
ZS142	177
ZS173	116
ZS174	116
ZS174B	116
ZS270	5800
ZS271	5801
ZS272	5802
ZS274	5804
ZS276	5806
ZS278	156
ZS605	137A
ZS701	5802
ZS702	5802
ZS6010	137A
ZS6011	137A
ZS6020	137A
ZS6021	137A
ZSC535B	108
ZSD235Y	196
ZSF4.7	5069A
ZSF88.2	5072A
ZT5.6	136A
ZT5.6A	136A
ZT5.6B	136A
ZT6.2	137A
ZT6.2A	137A
ZT6.2B	137A
ZT9.1	139A
ZT9.1A	139A
ZT9.1B	139A
ZT12	142A
ZT12A	142A
ZT12B	142A
ZT15	145A
ZT-15	145A
ZT15A	145A
ZT-15A	145A
ZT15B	145A
ZT-15B	145A
ZT20	123A
ZT20-1	123A
ZT20-12	123A
ZT20-55	123A
ZT20A	123A
ZT20B	123A
ZT20C	123A
ZT21	123A
ZT21-1	123A
ZT21-12	123A
ZT21-55	123A
ZT21A	123A
ZT21B	123A
ZT21C	123A
ZT22	123A
ZT22-1	123A
ZT22-12	123A
ZT22-55	123A
ZT22A	123A
ZT22B	123A
ZT22C	123A
ZT23	123A
ZT23-1	123A
ZT23-12	123A
ZT23A	123A
ZT23B	123A
ZT23C	123A
ZT323.55	123A
ZT24	123A
ZT24-1	123A
ZT24-12	123A
ZT24-55	123A
ZT24A	123A
ZT24B	123A
ZT24C	123A
ZT27	146A
ZT27A	146A
ZT27B	146A
ZT33	147A
ZT33A	147A
ZT33B	147A
ZT40	123A
ZT41	123A
ZT42	123A
ZT43	123A
ZT44	123A
ZT50	123A
ZT60	123A
ZT60-1	123A
ZT60-12	123A
ZT60-55	123A
ZT60A	123A
ZT60B	123A
ZT60C	123A
ZT61	123A
ZT61-1	123A
ZT61-12	123A
ZT61-55	123A
ZT61A	123A
ZT61B	123A
ZT61C	123A
ZT-62	123A
ZT62	149A
ZT62-1	123A
ZT62-12	123A
ZT62-15	123A
ZT62A	149A
ZT62B	149A
ZT62C	123A
ZT63	123A
ZT63-1	123A
ZT63-12	123A
ZT63-55	123A
ZT63A	123A
ZT63B	123A
ZT63C	123A
ZT64	123A
ZT64-1	123A
ZT64-5	123A
ZT64-12	123A
ZT64-55	123A
ZT64A	123A
ZT64B	123A
ZT64C	123A
ZT66	123A
ZT66A	128
ZT66B	128
ZT66C	128
ZT68	123A
ZT80	123A
ZT81	123A
ZT-82	123A
ZT82	149A
ZT82A	149A
ZT82B	149A
ZT82(Transistor)	123A
ZT83	123A
ZT84	123A
ZT86	123A
ZT87	123A
ZT88	123A
ZT89	123A
ZT90	128
ZT93	128
ZT94	128
ZT-110	123A
ZT110	151A
ZT110A	151A
ZT110B	151A
ZT111	123A
ZT112	123A
ZT113	123A
ZT114	123A
ZT116	123A
ZT117	123A
ZT118	123A
ZT119	123A
ZT131	159
ZT131A	159
ZT152	159
ZT152A	159
ZT153	159
ZT153A	159
ZT154	159
ZT154A	159
ZT180	159
ZT180A	159
ZT181	159
ZT181A	159
ZT182	159
ZT182A	159
ZT183	159
ZT183A	159
ZT184	159
ZT184A	159
ZT187	159
ZT187A	159
ZT189	159
ZT190	128
ZT191	128
ZT192	128
ZT193	128
ZT202	123A
ZT203	123A
ZT204	123A
ZT210	128
ZT211	128
ZT280	159
ZT280A	159
ZT281	159
ZT281A	159
ZT282	159
ZT282A	159
ZT283	159
ZT283A	159
ZT284	159
ZT284A	159
ZT286	129
ZT287	159
ZT287A	159
ZT402	123A
ZT403	123A
ZT404	123A
ZT406	123A
ZT600	186
ZT696	123A
ZT697	123A
ZT706	123A
ZT706A	123A
ZT708	123A
ZT709	108
ZT917	108
ZT918	108
ZT930	199
ZT1420	123A
ZT1479	128
ZT1481	128
ZT1483	152
ZT1484	152
ZT1485	152
ZT1486	152
ZT1487	130
ZT1488	130
ZT1489	130
ZT1490	130
ZT1511	182
ZT1512	182
ZT1513	182
ZT1613	128
ZT1700	128
ZT1701	152
ZT1702	130
ZT1708	123A
ZT1711	123A
ZT2102	102
ZT2205	123A
ZT2206	123A
ZT2270	192
ZT2368	108
ZT2369	108
ZT2369A	108
ZT2475	108
ZT2476	123A
ZT2477	123A
ZT2631	282
ZT2708	108
ZT2857	108
ZT2876	152
ZT2938	108
ZT3053	192
ZT3269A	108
ZT3375	186
ZT3440	198
ZT3512	128
ZT3600	108
ZT3866	128
ZTK-33	147A
ZTR-1n60	109
ZTR1N60	109
ZTR-1S1555	177
ZTR-A495	159
ZTR-B54	102A
ZTR-B56	102A
ZTR-C373	199
ZTR-F0R2B	5402
ZTR-FOR2B	5402
ZTR-LM386N	823
ZTR-W03C	116
ZTR-W06B	116
ZTR-W06C	116
ZTR-W06B	116
ZTX107	199
ZTX108	199
ZTX109	199
ZTX300	123A
ZTX301	123A
ZTX302	128
ZTX303	192
ZTX304	123A
ZTX310	123A
ZTX311	123A
ZTX312	123A
ZTX320	108
ZTX321	108
ZTX325	316
ZTX326	316
ZTX330	123A
ZTX331	128
ZTX341	171
ZTX342	171
ZTX360	188
ZTX500	129
ZTX501	159
ZTX502	159
ZTX503	159
ZTX504	159
ZTX510	159
ZTX530	159
ZTX530A	159
ZTX530B	159
ZTX530C	159
ZTX530D	159
ZTX531	159
ZTX531A	159
ZTX531B	159
ZU12	142A
ZU12A	142A
ZU12B	142A
ZU15	145A
ZU-15	145A
ZU15A	145A
ZU-15A	145A
ZU15B	145A
ZU-15B	145A
ZU27	146A
ZU27A	146A
ZU27B	146A
ZU33	147A
ZU33A	147A
ZU33B	147A
ZU62	149A
ZU62A	149A
ZU62B	149A
ZU82	150A
ZU82A	150A
ZU82B	150A
ZU110	151A
ZU110A	151A
ZU110B	151A
ZV9.1	139A
ZV9.1A	139A
ZV9.1B	139A
ZV12	142A
ZV12A	142A
ZV12B	142A
ZV15	145A
ZV-15	145A
ZV15A	145A
ZV-15A	145A
ZV15B	145A
ZV-15B	145A
ZV27	146A
ZV27A	146A
ZV27B	146A
ZV33	147A
ZV33A	147A
ZV33B	147A
ZV62	149A
ZV62A	149A
ZV62B	149A
ZV82	150A
ZV82A	150A
ZV82B	150A
ZV110	151A
ZV110A	151A
ZV110B	151A
ZW0-9.1	139A
ZW0762	289
ZW2	116
ZW2.7	5063A
ZW3.3	5066A
ZW9.1	139A
ZX070	138A
ZX-070	5071A
ZX9.1	139A
ZX12	142A
ZXL-14	144A
ZXY-14	144A
ZXY14B	144A
ZY3.9	5113A
ZY4.3	5114A
ZY4.7	5115A
ZY5.1	5116A
ZY5.6	5117A
ZY6.2	5119A
ZY6.8	5120A
ZY7.5	5121A
ZY8.2	5122A
ZY9.1	5124A
ZY10	5125A
ZY11	5126A
ZY12	5127A
ZY12A	142A
ZY12B	142A
ZY13	5128A
ZY-15	145A
ZY15	5130A
ZY15A	145A
ZY-15A	145A
ZY15B	145A
ZY-15B	145A
ZY16	5131A
ZY18	5133A
ZY20	5135A
ZY22	5136A
ZY24	5137A
ZY27	5139A
ZY27A	146A
ZY27B	146A
ZY33	5142A
ZY33A	147A
ZY33B	147A
ZY36	5143A
ZY39	5144A
ZY43	5145A
ZY47	5146A
ZY51	5147A
ZY56	5148A
ZY62	5150A
ZY62A	149A
ZY62B	149A
ZY68	5151A
ZY75	5152A
ZY82	150A
ZY82A	150A
ZY82B	150A
ZY91	5155A
ZY100	5156A
ZY110	5157A
ZY110A	151A
ZY110B	151A
ZY120	5158A
ZY130	5159A
ZY150	5161A
ZY160	5162A
ZY180	5164A
ZY200	5166A
ZZ3.3	5066A
ZZ3.6	134A
ZZ3.9	5067A
ZZ4.1	135A
ZZ4.3	5068A
ZZ4.7	5069A
ZZ5.1	135A
ZZ5.6	136A
ZZ6.2	137A
ZZ6.8	5071A
ZZ7.5	138A
ZZ8.2	5072A
ZZ9.1	139A
ZZ10	140A
ZZ11	5074A
ZZ12	142A
ZZ13	143A
ZZ15	145A
ZZ-15	145A
ZZ18	5027A
ZZ22	5030A
ZZ27	146A
ZZ33	147A
ZZ62	149A
ZZ82	150A
ZZ110	151A

Special Notes

@ Same number is used for two different parts - check schematic.

* ECG539

When replacing part numbers 530165-12 and MH1011B01 with ECG539 cut "G" lead at surface of failed multiplier. Strip and connect to "G" terminal of replacement.

* ECG779-1

Use of the ECG779-1 may require modification of external circuitry - see data packed with device.

* ECG1081A

Following modifications are required in order to replace UPC563H by ECG1081A:

1. Remove 680-ohm resistor on pin #3 and #4 as well as SD46 or 1S953 diode.
2. Remove 10 K-ohm resistor on pin #9.
3. Change 220 pF capacitor between pin #4 and pin #5 to 47 pF to get same frequency response.
4. Ground heat sink fin.

The ECG1081A is a direct replacement for the UPC563H2 by grounding the heat sink fin.

* ECG1086

When replacing type UPC49C with ECG1086 pin #7 should be connected to nearest ground through a 3.3 K-ohm, 1/2 watt resistor.

* ECG1089

Devices marked ECG1089-3, when used to replace a UPC29C, may require the addition of a .01 μF capacitor between pins #13 and #17 for optimum performance.

* ECG1091

When using ECG1091 to replace UPC48C, ground pin #15 through a 5.6 K-ohm, 1/2 watt resistor.

* ECG1140

The ECG1140 is an improved replacement for type UPC575C. The following circuit changes must be made for proper operation.

1. Remove any resistor between pins #5 and #8 (typically this will be 22,000 ohms).
2. Remove any resistor between pin #8 and ground (typically this will be 8200 ohms).
3. By-pass pin #8 directly to ground through a 47 μF capacitor.

Note: No circuit modifications are necessary to replace type UPC575C2 with ECG1140.

* TBA810S-H

When replacing TBA810S-H with ECG1115A connect 100-ohm, 1/4 watt resistor between pins #1 and #4.

* UPA41C

When replacing UPA41C, use two ECG159's as illustrated below.

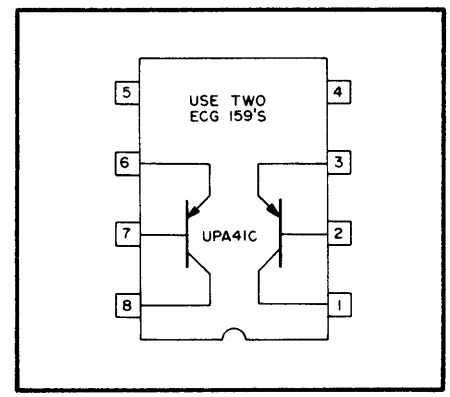

* 13-17-6

Use ECG123A plus 15 K-ohm resistor base to ground.

* 15-43251-1

The Sylvania Integrated Circuit part number 15-43251-1 can be replaced with the ECG747. When installing the ECG747, a 470-ohm resistor should be connected in parallel with the existing 470-ohm resistor, between pins #5 and #6. This is to maintain the proper DC level at the output on pin #4 when measured with no signal output.

Distributor and Special Markets Division
GTE Sylvania Incorporated
1025 Westminster Drive
Williamsport PA 17701

In Canada

GTE Sylvania Limited
Electronic Division
8750 Cote de Liesse Road
Montreal H4T 1H3 Quebec

SYLVANIA

Electronic
Components

GTE